MP-11507

ISSUE	DATE
1	5-19-59

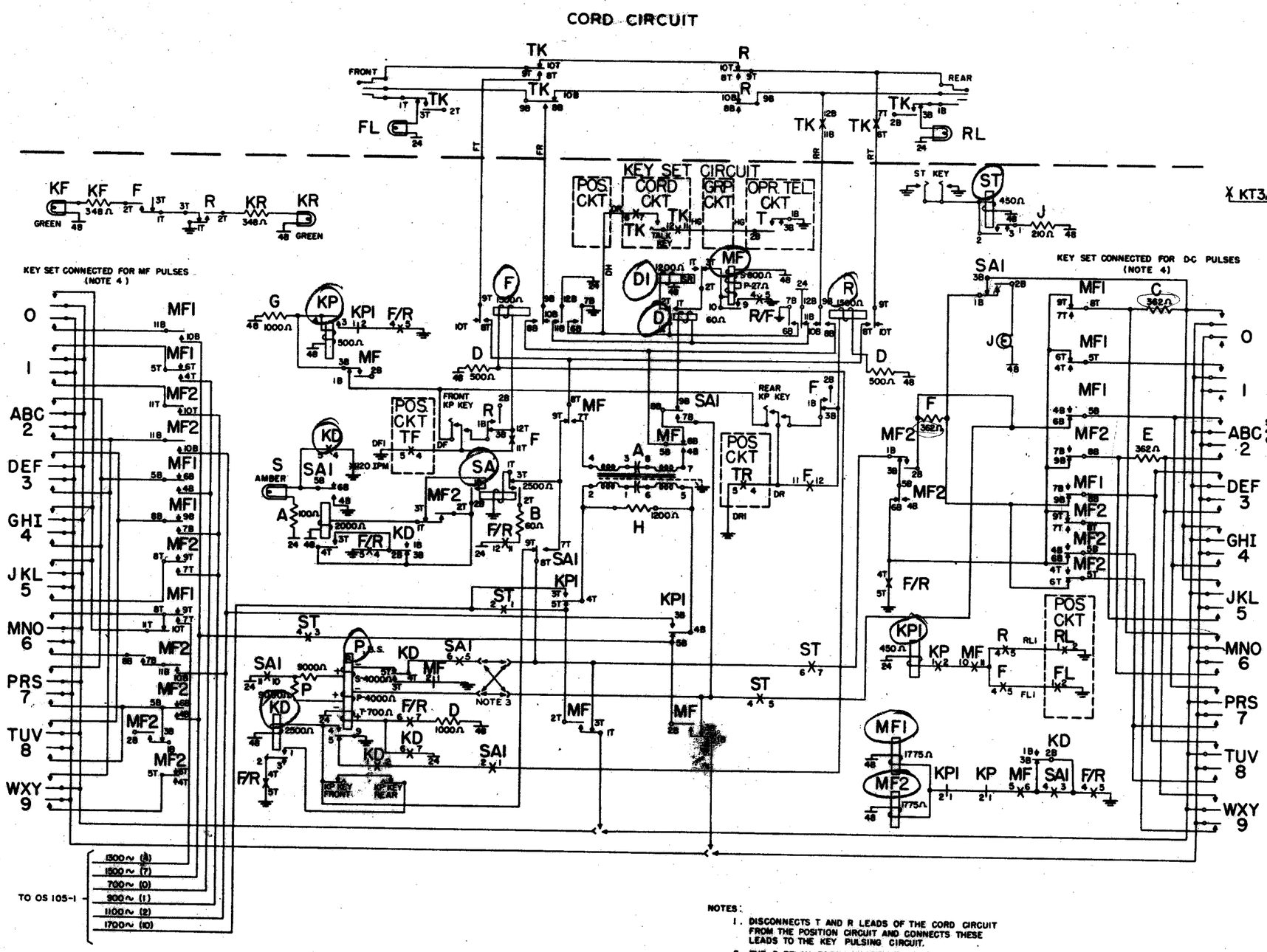

SEQUENCE CHART

CORD CIRCUIT TALK KEY AND TK RELAY OPERATED

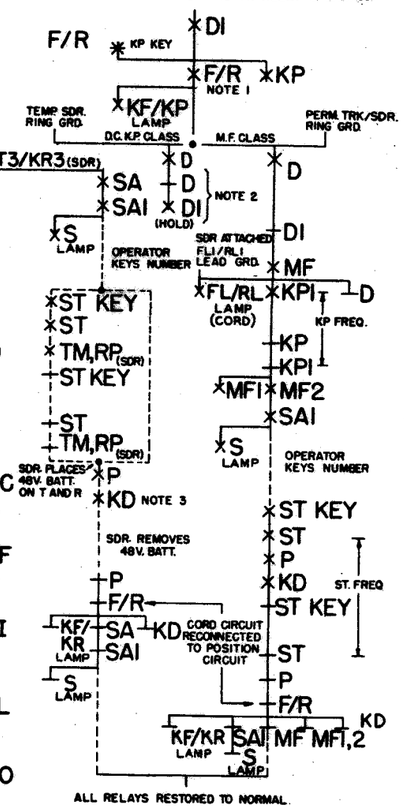

OPERATOR'S TELEPHONE CIRCUIT	SD-55110-01, ISS.14-D
✕ KEY SET CIRCUIT	SD-56031-01, ISS.8-B
CORD CIRCUIT	SD-64737-01, ISS.9-D
POSITION CIRCUIT	SD-64738-01, ISS.18-B
GROUPING CIRCUIT	SD-64740-01, ISS.10-D
SENDER CIRCUIT	SD-95480-01, ISS.4-B

NOTES:

1. DISCONNECTS T AND R LEADS OF THE CORD CIRCUIT FROM THE POSITION CIRCUIT AND CONNECTS THESE LEADS TO THE KEY PULSING CIRCUIT.
2. THE D RELAY DOES NOT REMAIN OPERATED LONG ENOUGH TO PERMIT THE DI RELAY TO RELEASE.
3. OPERATION OF KD RELAY PLACES A GROUND ON THE TIP WHERE AUTOMATIC START OF MACHINE RINGING IS NOT REQUIRED OR ON THE RING WHERE AUTOMATIC START OF MACHINE RINGING IS REQUIRED. WHERE SPECIFIED, LEADS ARE REVERSIBLE UNDER CONTROL OF A KEY.
4. CONNECTIONS FOR THE D-C AND MF KEYSET CONNECTIONS ARE SHOWN SEPARATELY.

D-C AND MF KEYSET CIRCUIT

NO. 3C OR 3CL TOLL SWBD.

OS 104-1

BELL TELEPHONE LABORATORIES, INC.
PRINTED IN U.S.A.
ORDER AS BSP ITEM MP-11507