LINK AND CONTROLLER CIRCUIT

CLASS OF SERVICE INDICATIONS

	DISTRICT JUNCTOR	XB TANDEM D.O.S. (2-W O.S.T.)	INCOMING SEL. OR TRK	TANDEM F.S. OR P.C.I.
FT			OPERATED	OPERATED
FR		OPERATED		OPERATED
STEERING RELAYS OPERATED	AL, AC	AL, AC	THL, THC	AL, AC

OUTGOING TRUNK CIRCUIT

DISTRICT JUNCTOR CIRCUIT

TO MARKER VIA DIST LINK AND CONN.

TO OUTGOING TRKS THROUGH DISTRICT AND OFFICE FRAMES

TO OTHER TYPES OF O.G.T. EQUIP.

TO SHEET 3 OR 5

CONTINUED ON SHEET 2

TO ORIG. MKR. CONN.

TO SDR M.B. FR.

TO DIST. LK. AND CONN.

CLASS OF SERVICE

MAKE-BUSY JACK

* KEY PULSING SENDER CIRCUIT SD-25015-01 ISS. 34
ORIGINATING MARKER CIRCUIT SD-25016-01 ISS. 41
DISTRICT JUNCTOR CIRCUIT SD-25021-01 ISS. 6
LINK AND CONTROLLER CIRCUIT SD-25029-01 ISS. 32
ORIGINATING MARKER CONNECTOR SD-25035-01 ISS. 30
OUTGOING TRUNK CIRCUIT SD-55191-01 ISS. 8
PANEL INCOMING SELECTOR CIRCUIT SD-25550-01 ISS. 8
CALL INDICATOR TRUNK CIRCUIT ES-10423-01 ISS. 9

KEY PULSING SENDER CIRCUIT
RECEIVES D-C KEY PULSES
REVERTIVE AND P.C.I. PULSING

OS 108-1 6 SHEETS, SHEET 1

NO. 3C OR 3CL TOLL SWBD.

ORDER AS BSP ITEM MP-11511

ISSUE 1 K.B.M.
DATE 3-17-50

MP-11511, 6 SHEETS, SHEET 1

BELL TELEPHONE LABORATORIES, INC.
PRINTED IN U.S.A.

MP-11511 6 SHEETS, SHEET 2

ISSUE	1	V.B.W.			
DATE	3-17-50				

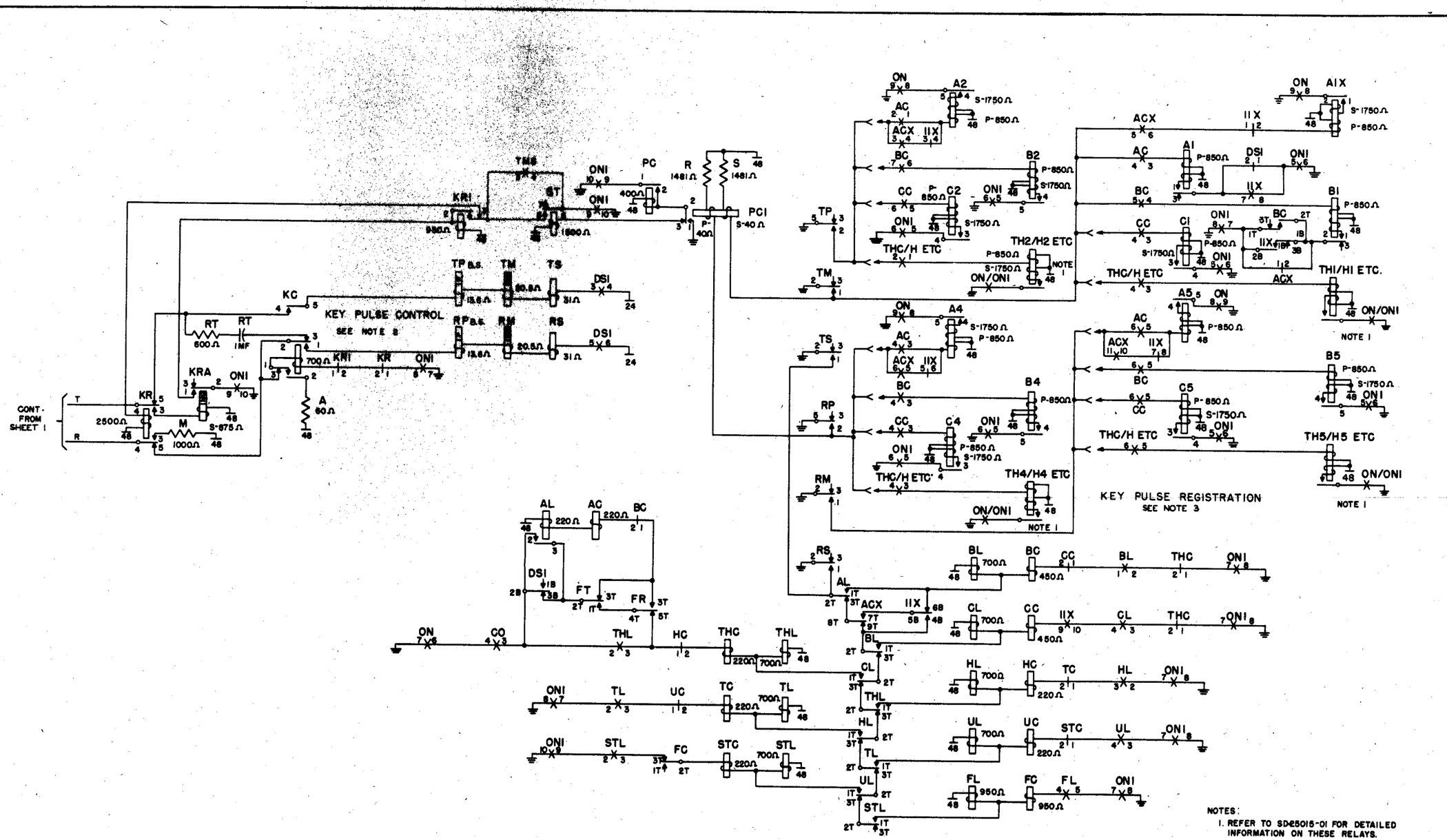

NOTES:

1. REFER TO SD-25015-01 FOR DETAILED INFORMATION ON THESE RELAYS.
2. FOR KEY REGISTRATION CHART SEE SC 102-1.
3. ARRANGED FOR PREFIX 11 DIALING.

KEY PULSING SENDER CIRCUIT
RECEIVES D-C KEY PULSES
REVERTIVE AND P.C.I. PULSING

NO. 3C OR 3CL TOLL, SWBD. 6 SHEETS, SHEET 2

OS 108-1

ORDER AS BSP ITEM MP-11511

BELL TELEPHONE LABORATORIES, INC.
PRINTED IN U.S.A.

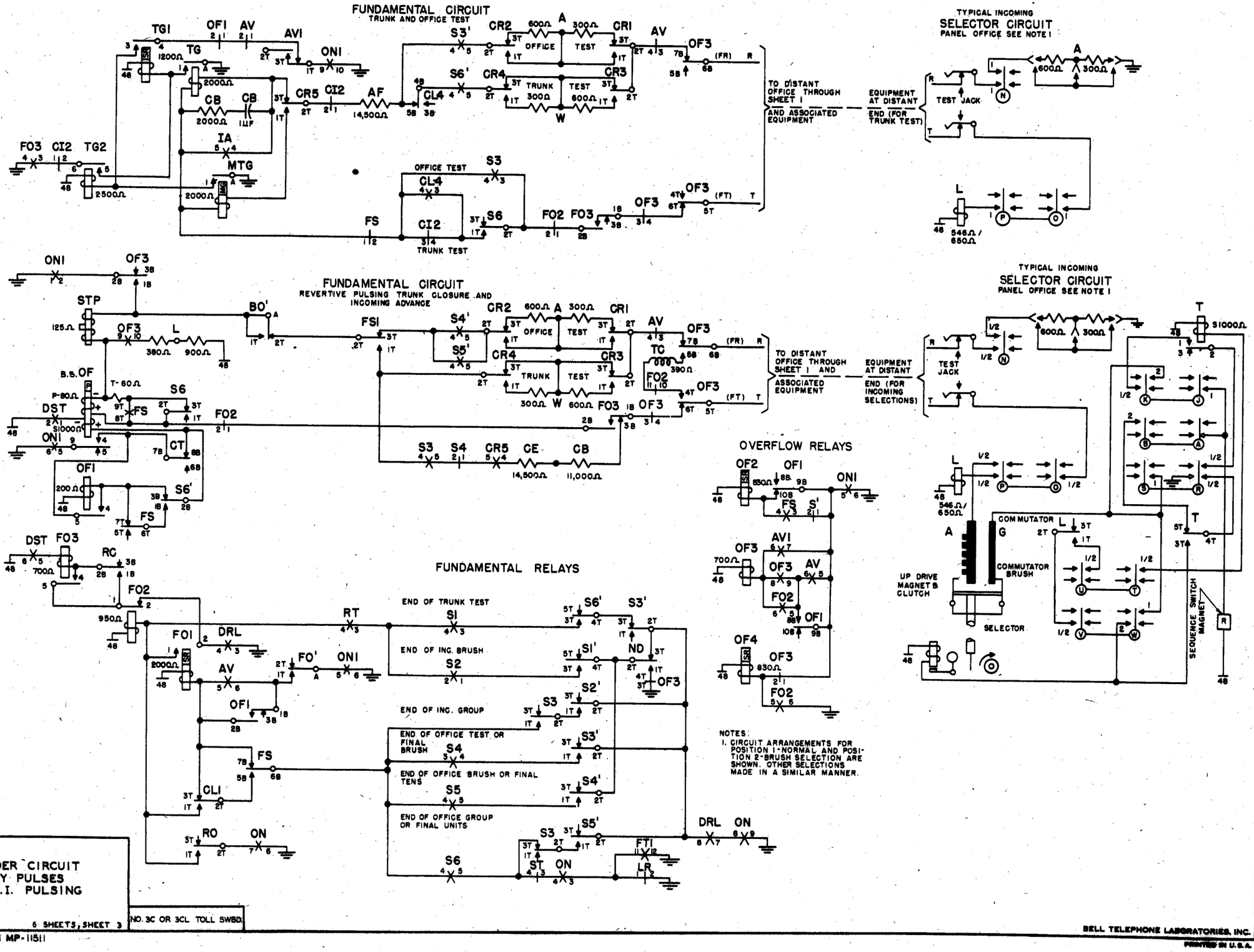

KEY PULSING SENDER CIRCUIT
RECEIVES D-C KEY PULSES
REVERTIVE AND P.C.I. PULSING

OS 108-1 — 6 SHEETS, SHEET 3 — NO. 3C OR 3CL TOLL SWBD.

ORDER AS BSP ITEM MP-11511

ISSUE 1 | DATE 3-17-50

MP-11511 6 SHEETS, SHEET 3

BELL TELEPHONE LABORATORIES, INC.
PRINTED IN U.S.A.

ISSUE	1
DATE	3-17-56
VBW	

SELECTION CONTROL

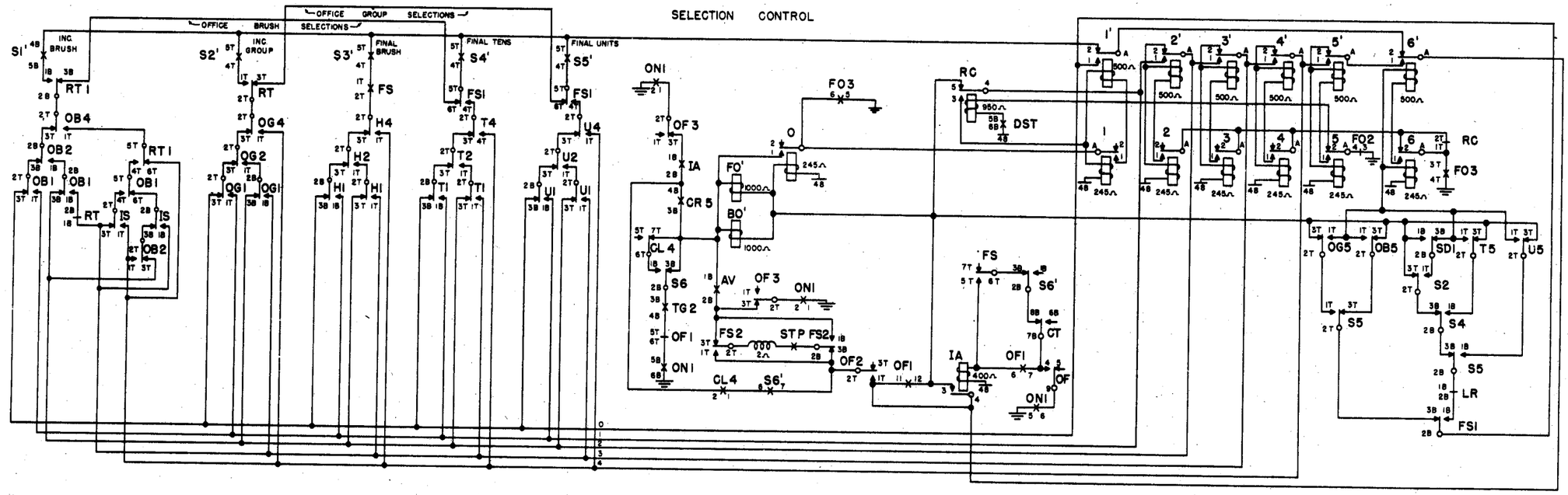

SEQUENCE RELAYS

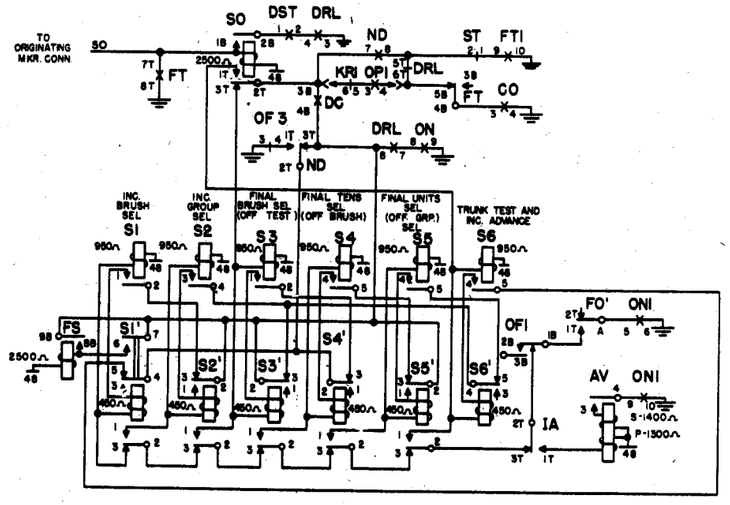

TRANSLATION FOR INCOMING BRUSH AND GROUP SELECTIONS

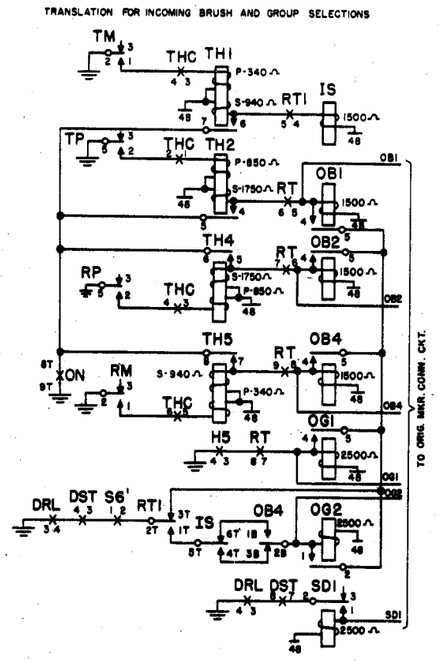

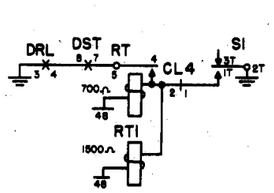

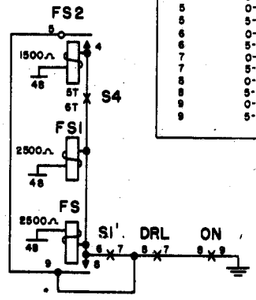

TRANSLATION TABLE

THOUSANDS DIGIT	HUNDREDS DIGIT	RELAYS OPERATED	BRUSH	GROUP
0	0-4	NONE	0	0
0	5-9	OG1	0	1
1	0-4	IS-OG2	0	2
1	5-9	IS-OG1-OG2	0	3
2	0-4	OB1	1	0
2	5-9	OB1-OG1	1	1
3	0-4	IS-OB1-OG2	1	2
3	5-9	IS-OB1-OG1-OG2	1	3
4	0-4	OB2	2	0
4	5-9	OB2-OG1	2	1
5	0-4	OB4-OG2	2	2
5	5-9	OB4-OG1-OG2	2	3
6	0-4	IS-OB4	3	0
6	5-9	IS-OB4-OG1	3	1
7	0-4	OB1-OB4-OG2	3	2
7	5-9	OB1-OB4-OG1-OG2	3	3
8	0-4	IS-OB1-OB4	4	0
8	5-9	IS-OB1-OB4-OG1	4	1
9	0-4	OB2-OB4-OG2	4	2
9	5-9	OB2-OB4-OG1-OG2	4	3

KEY PULSING SENDER CIRCUIT
RECEIVES D-C KEY PULSES
REVERTIVE AND P.C.I. PULSING

NO. 3C OR 3CL TOLL SWBD.

6 SHEETS, SHEET 4

OS 108-1

BELL TELEPHONE LABORATORIES, INC.
PRINTED IN U.S.A.
ORDER AS BSP ITEM MP-11511

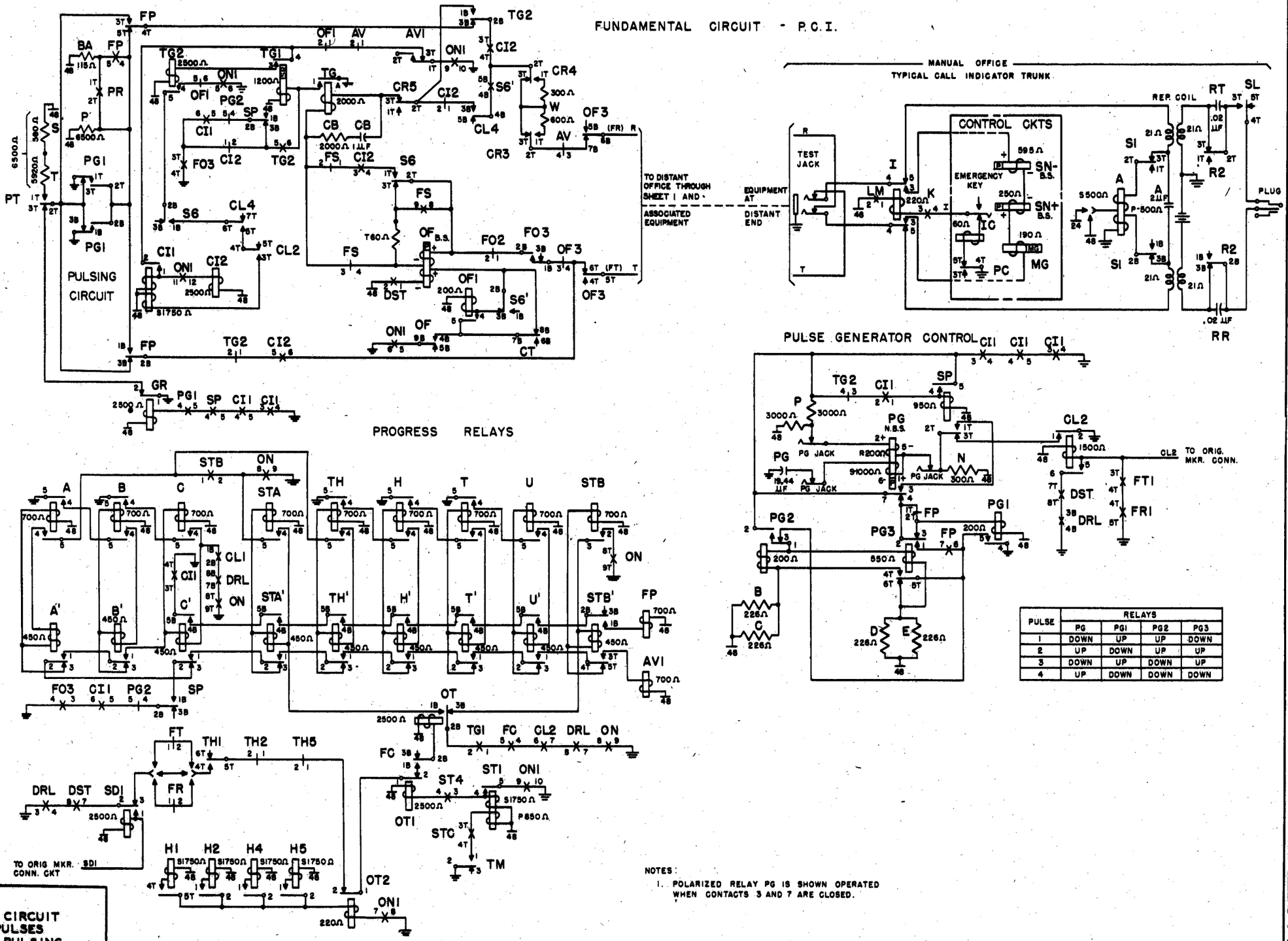

PULSE	RELAYS			
	PG	PG1	PG2	PG3
1	DOWN	UP	UP	DOWN
2	UP	DOWN	UP	UP
3	DOWN	UP	DOWN	UP
4	UP	DOWN	DOWN	DOWN

NOTES:

1. POLARIZED RELAY PG IS SHOWN OPERATED WHEN CONTACTS 3 AND 7 ARE CLOSED.

KEY PULSING SENDER CIRCUIT
RECEIVES D-C KEY PULSES
REVERTIVE AND P.C.I. PULSING

OS 108-1

6 SHEETS, SHEET 5

NO.3C OR 3CL TOLL SWBD.

ORDER AS BSP ITEM MP-11511

BELL TELEPHONE LABORATORIES, INC.

PRINTED IN U.S.A.

MP-11511 6 SHEETS, SHEET 5

ISSUE 1 V.B.W.
DATE 3-17-50

MP-11511 6 SHEETS, SHEET 6

ISSUE	1	VBW.
DATE	3-17-56	

DIGIT TRANSLATION AND CONTROL OF PT AND PR RELAYS

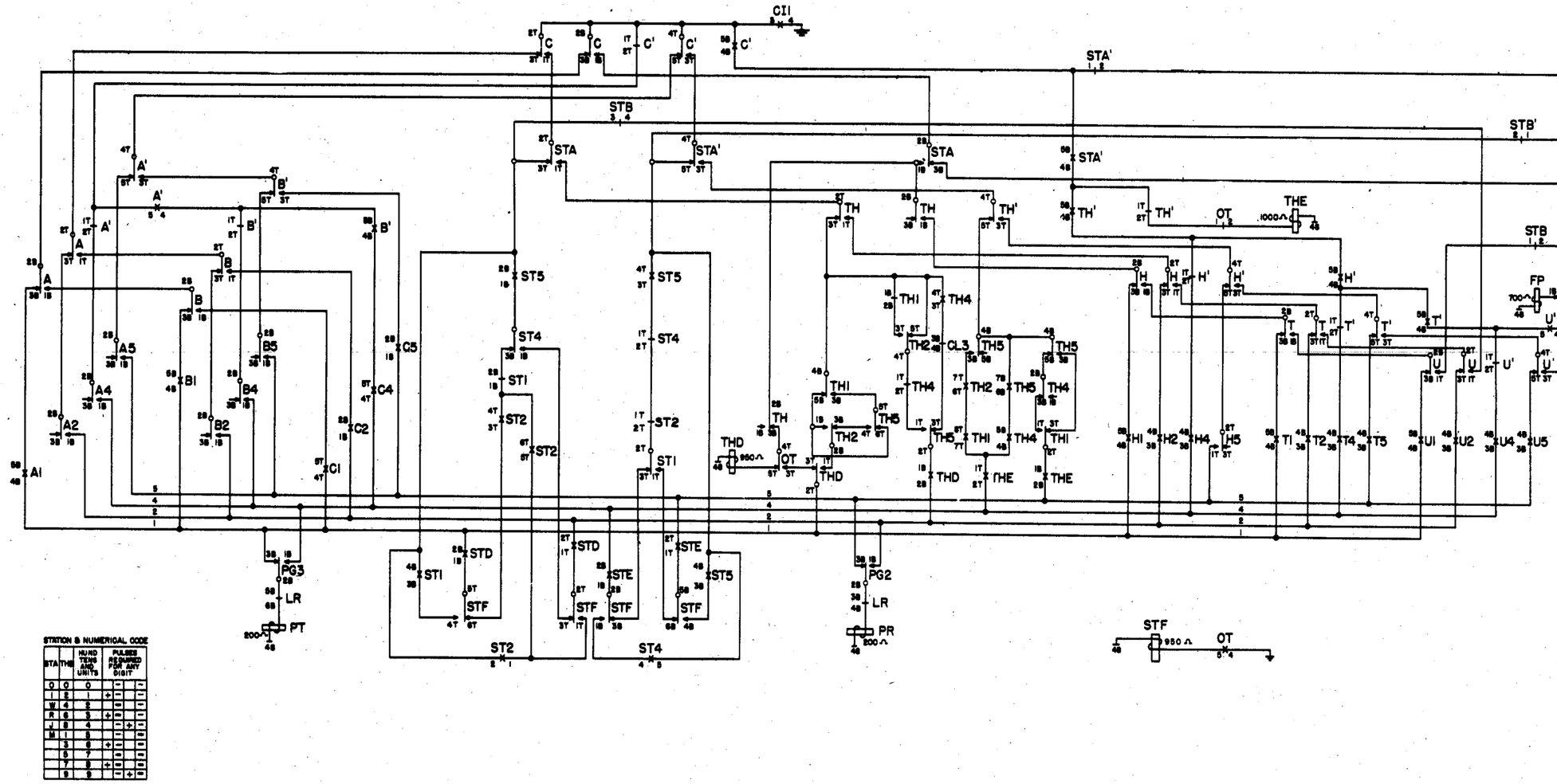

STATION & NUMERICAL CODE

STATIONS		HUND TENS AND UNITS	PULSES REQUIRED FOR ANY DIGIT		
0	0	0	-	-	-
1	2	1	+	-	-
W	4	2	-	+	-
R	6	3	+	+	-
-	8	4	-	-	+
M	1	5	+	-	+
	3	6	-	+	+
	5	7	+	+	+
	7	8	-	-	-
	9	9	+	-	-

KEY PULSING SENDER CIRCUIT
RECEIVES D-C KEY PULSES
REVERTIVE AND P.C.I. PULSING

NO. 3C OR 3CL TOLL SWBD.

6 SHEETS SHEET 6

OS 108-1

BELL TELEPHONE LABORATORIES, INC.
PRINTED IN U.S.A.

ORDER AS BSP ITEM MP-11511