ISSUE	DATE
1	6-21-51
2	6-23-53

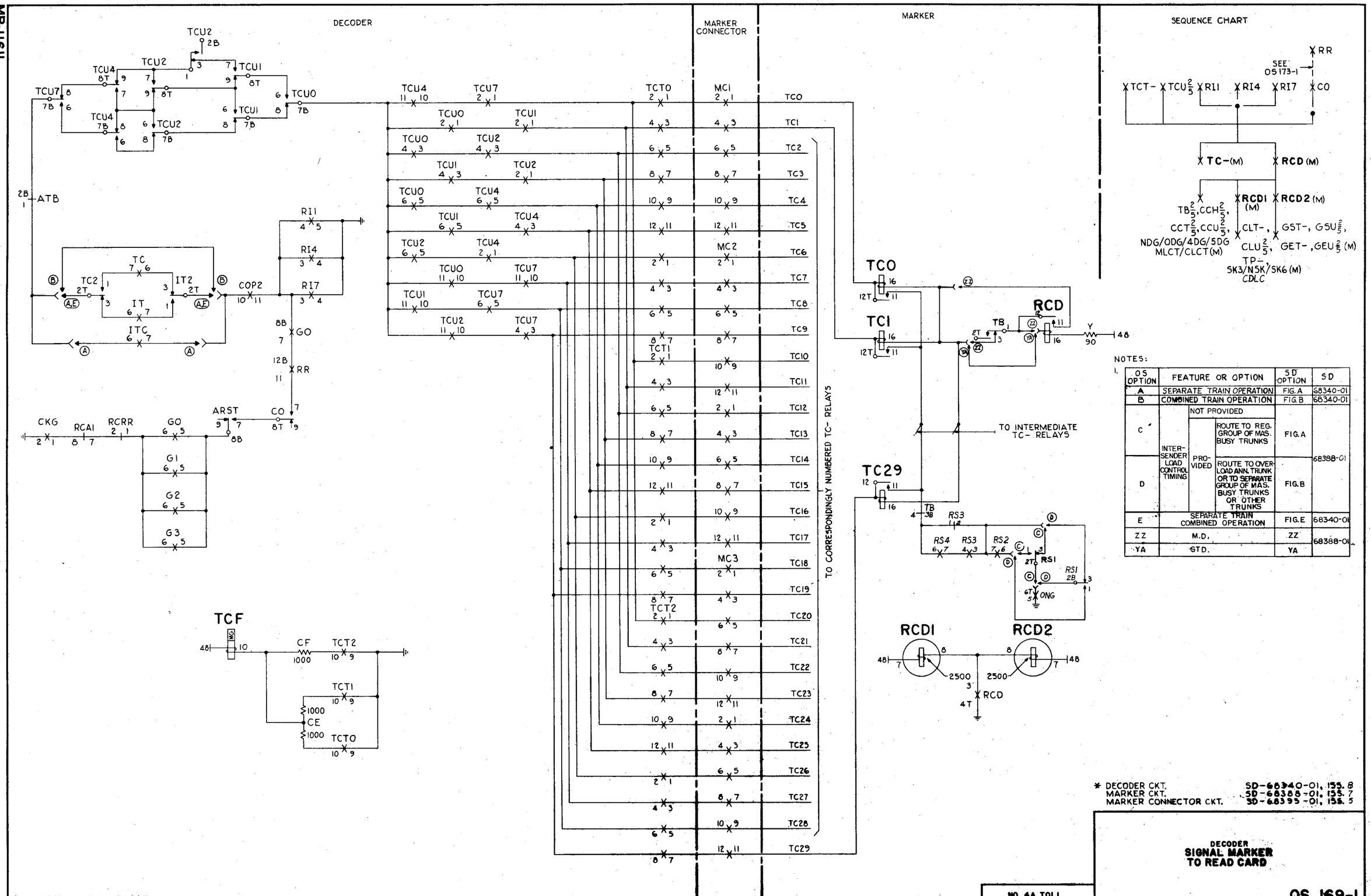

NOTES:

1.

OS OPTION	FEATURE OR OPTION			SD OPTION	SD
A	SEPARATE TRAIN OPERATION			FIG. A	68340-01
B	COMBINED TRAIN OPERATION			FIG. B	68340-01
C	INTER-SENDER LOAD CONTROL TIMING	NOT PROVIDED			
		PROVIDED	ROUTE TO REG. GROUP OF MAS. BUSY TRUNKS	FIG. A	68388-01
D			ROUTE TO OVERLOAD ANN. TRUNK OR TO SEPARATE GROUP OF MAS. BUSY TRUNKS OR OTHER TRUNKS	FIG. B	
E	SEPARATE TRAIN COMBINED OPERATION			FIG. E	68340-01
ZZ	M.D.			ZZ	68388-01
YA	STD.			YA	

* DECODER CKT. SD-68340-01, 155.8
MARKER CKT. SD-68388-01, 155.7
MARKER CONNECTOR CKT. SD-68395-01, 155.5

DECODER
SIGNAL MARKER TO READ CARD

NO. 4A TOLL

OS 169-1