MP-11624

| ISSUE | DATE |
|---|---|
| 1 | 6-18-57 |

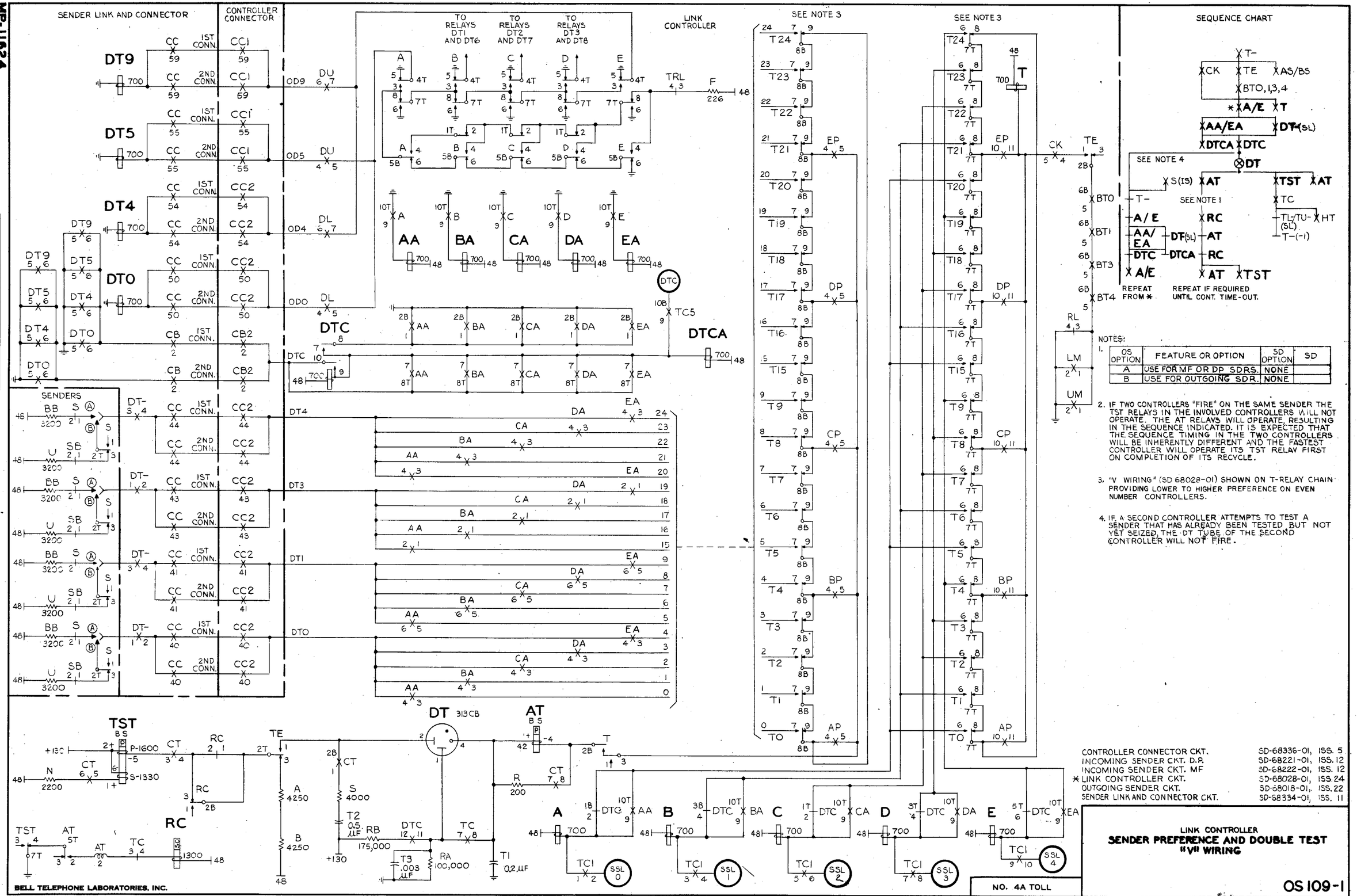


BELL TELEPHONE LABORATORIES, INC.

PRINTED IN U. S. A.

ORDER AS BSP ITEM MP-11624