MP-11629

ISSUE	1	2			
DATE	6-27-51	9-30-53			

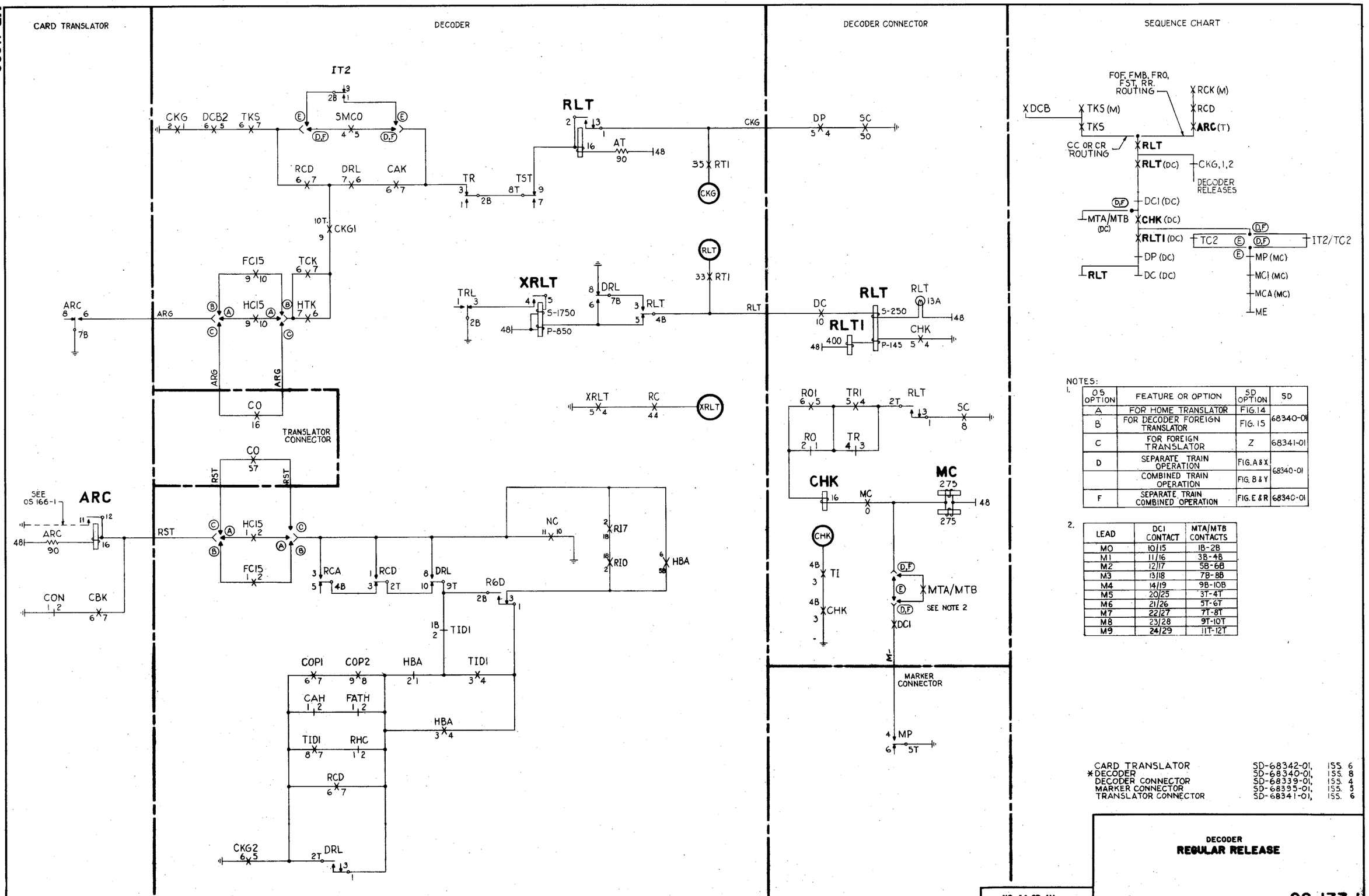

NOTES:

1.

OS OPTION	FEATURE OR OPTION	SD OPTION	SD
A	FOR HOME TRANSLATOR	FIG. 14	68340-01
B	FOR DECODER FOREIGN TRANSLATOR	FIG. 15	
C	FOR FOREIGN TRANSLATOR	Z	68341-01
D	SEPARATE TRAIN OPERATION	FIG. A & X	68340-01
	COMBINED TRAIN OPERATION	FIG. B & Y	
F	SEPARATE TRAIN COMBINED OPERATION	FIG. E & R	68340-01

2.

LEAD	DCI CONTACT	MTA/MTB CONTACTS
M0	10/15	1B-2B
M1	11/16	3B-4B
M2	12/17	5B-6B
M3	13/18	7B-8B
M4	14/19	9B-10B
M5	20/25	3T-4T
M6	21/26	5T-6T
M7	22/27	7T-8T
M8	23/28	9T-10T
M9	24/29	11T-12T

CARD TRANSLATOR	SD-68342-01,	ISS. 6
*DECODER	SD-68340-01,	ISS. 8
DECODER CONNECTOR	SD-68339-01,	ISS. 4
MARKER CONNECTOR	SD-68395-01,	ISS. 3
TRANSLATOR CONNECTOR	SD-68341-01,	ISS. 6

DECODER
REGULAR RELEASE

NO. 4A OR 4M

OS 177-1

BELL TELEPHONE LABORATORIES, INC.
PRINTED IN U. S. A.
ORDER AS BSP ITEM MP-11629