MP-11630

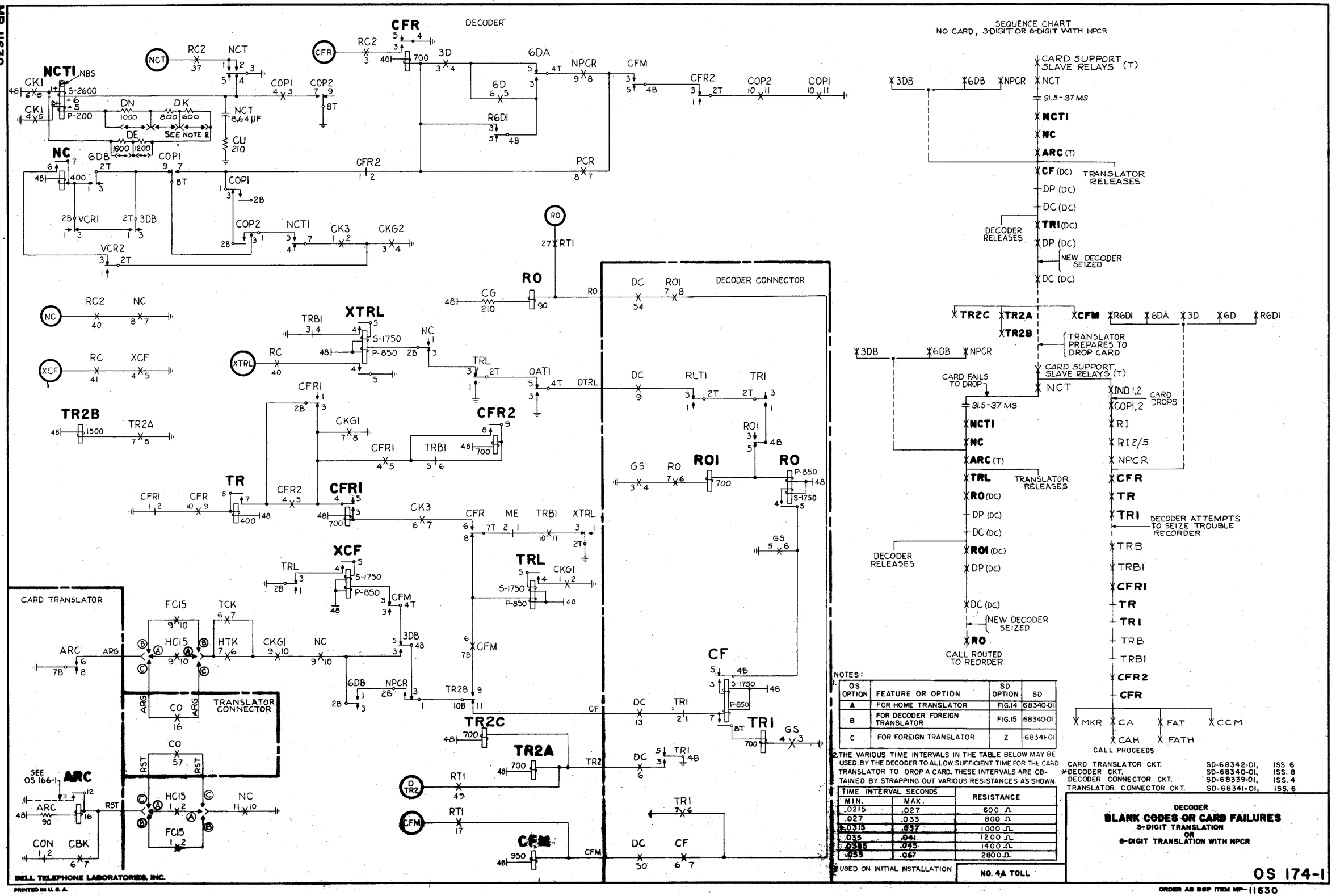

NOTES:

1.

OS OPTION	FEATURE OR OPTION	SD OPTION	SD
A	FOR HOME TRANSLATOR	FIG.14	68340-01
B	FOR DECODER FOREIGN TRANSLATOR	FIG.15	68340-01
C	FOR FOREIGN TRANSLATOR	Z	68341-01

2. THE VARIOUS TIME INTERVALS IN THE TABLE BELOW MAY BE USED BY THE DECODER TO ALLOW SUFFICIENT TIME FOR THE CARD TRANSLATOR TO DROP A CARD. THESE INTERVALS ARE OBTAINED BY STRAPPING OUT VARIOUS RESISTANCES AS SHOWN.

TIME INTERVAL SECONDS MIN.	MAX.	RESISTANCE
.0215	.027	600 Ω
.027	.033	800 Ω
*.0315	.037	1000 Ω
.035	.041	1200 Ω
.0385	.045	1400 Ω
.055	.067	2800 Ω

*USED ON INITIAL INSTALLATION

CARD TRANSLATOR CKT.	SD-68342-01,	ISS 6
*DECODER CKT.	SD-68340-01,	ISS. 8
DECODER CONNECTOR CKT.	SD-68339-01,	ISS. 4
TRANSLATOR CONNECTOR CKT.	SD-68341-01,	ISS. 6

NO. 4A TOLL

DECODER
BLANK CODES OR CARD FAILURES
3-DIGIT TRANSLATION
OR
6-DIGIT TRANSLATION WITH NPCR

OS 174-1

ORDER AS BSP ITEM MP-11630

ISSUE	1	2
DATE	7-5-51	8-5-53