MP-11640

ISSUE	DATE
1	6-14-61

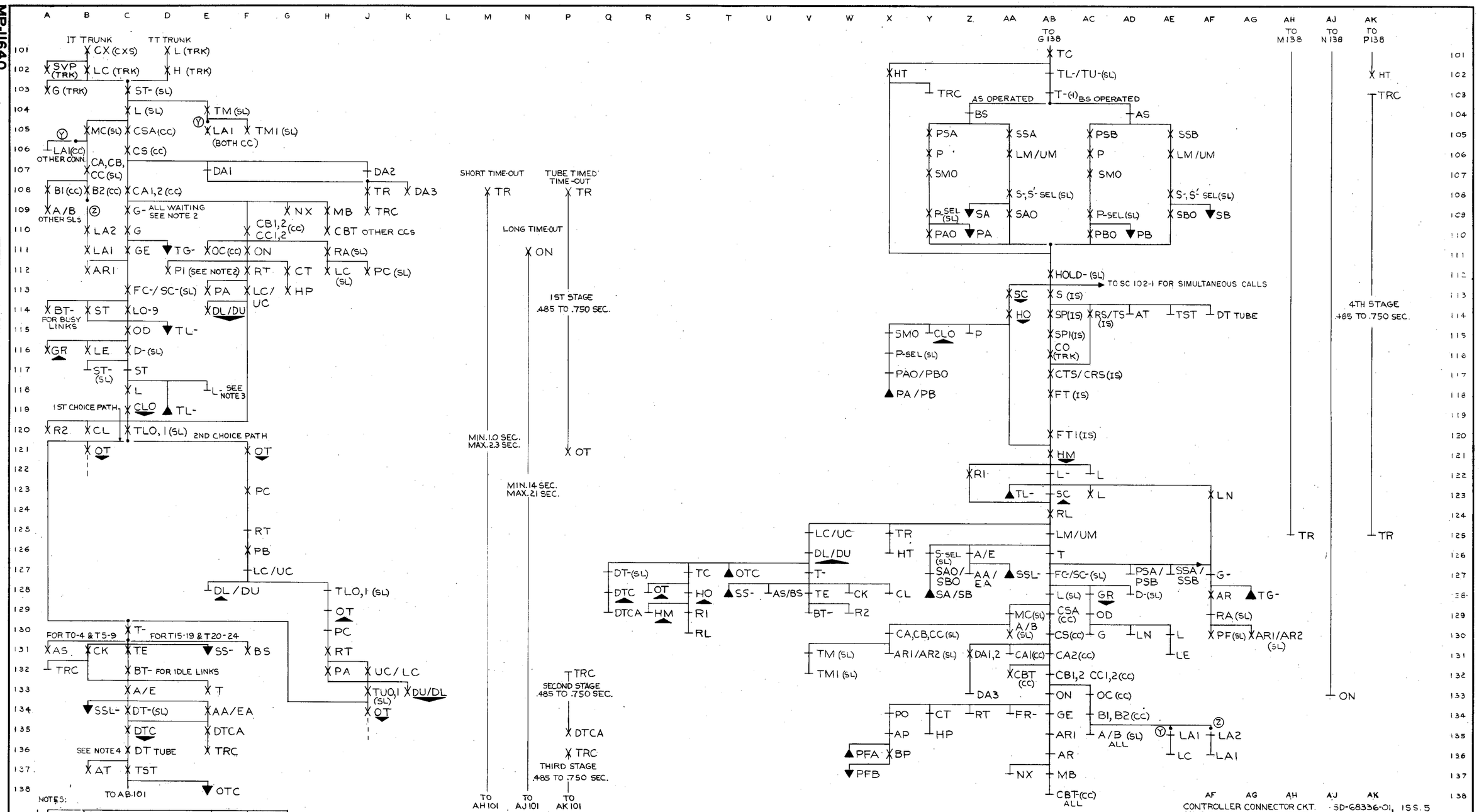

NOTES:

1.

SC OPTION	FEATURE OR OPTION	SD OPTION	SD
Y	IF ACCESS IS REQUIRED TO 12 OR LESS SDR. LINK FRS.	Y	68336-01
Z	IF ACCESS IS REQUIRED TO 12 OR MORE SDR. LINK FRS.	Z	68336-01

2. ASSUMES PO AND AP OPERATED FROM PREVIOUS CALL.

3. ALL L's EXCEPT THOSE ASSOCIATED WITH TRUNKS HAVING GROUNDED START LEADS.

4. ASSUMES NO COMPETING CONTROLLERS.

AF	AG	AH	AJ	AK
CONTROLLER CONNECTOR CKT.			SD-68336-01,	ISS. 5
CX SIGNALING CKT. TYPE B			SD-95048-01,	ISS. 12
INCOMING SENDER CKT-DP			SD-68221-01,	ISS. 12
* LINK CONTROLLER CKT.			SD-68028-01,	ISS. 24
SDR. LINK & CONNECTOR CKT.			SD-68334-01,	ISS. 11
TOLL TANDEM TRUNK CKT-DP			SD-68315-01,	ISS. 5
2-WAY INTERTOLL TRUNK CKT-DP INCOMING			SD-68232-01,	ISS. 8

LINK CONTROLLER
OVER-ALL OPERATIONS

NO. 4A TOLL

SC 101-1

BELL TELEPHONE LABORATORIES, INC.
PRINTED IN U. S. A.
ORDER AS BSP ITEM MP-11640