MP-11641

ISSUE	DATE
1	5-29-51

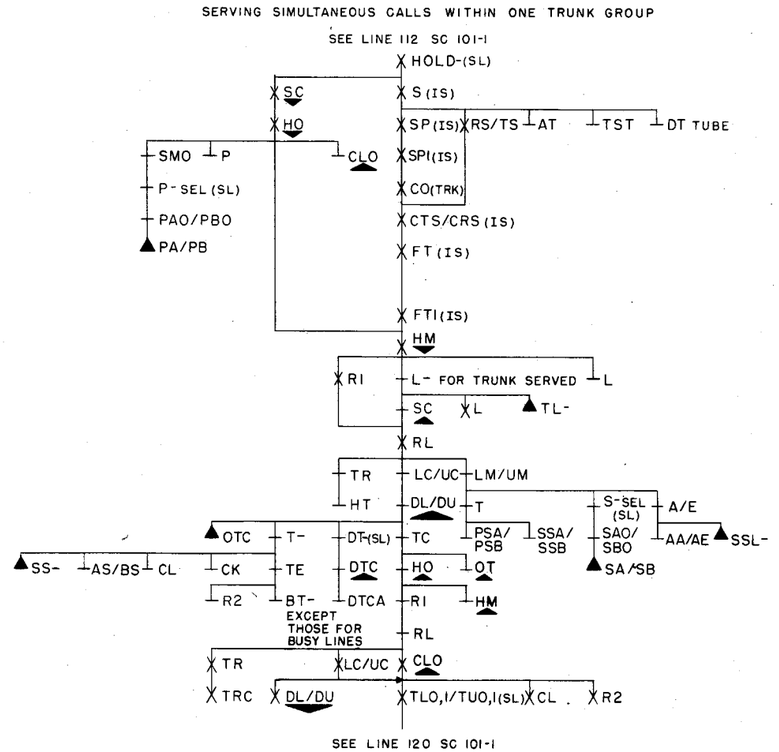

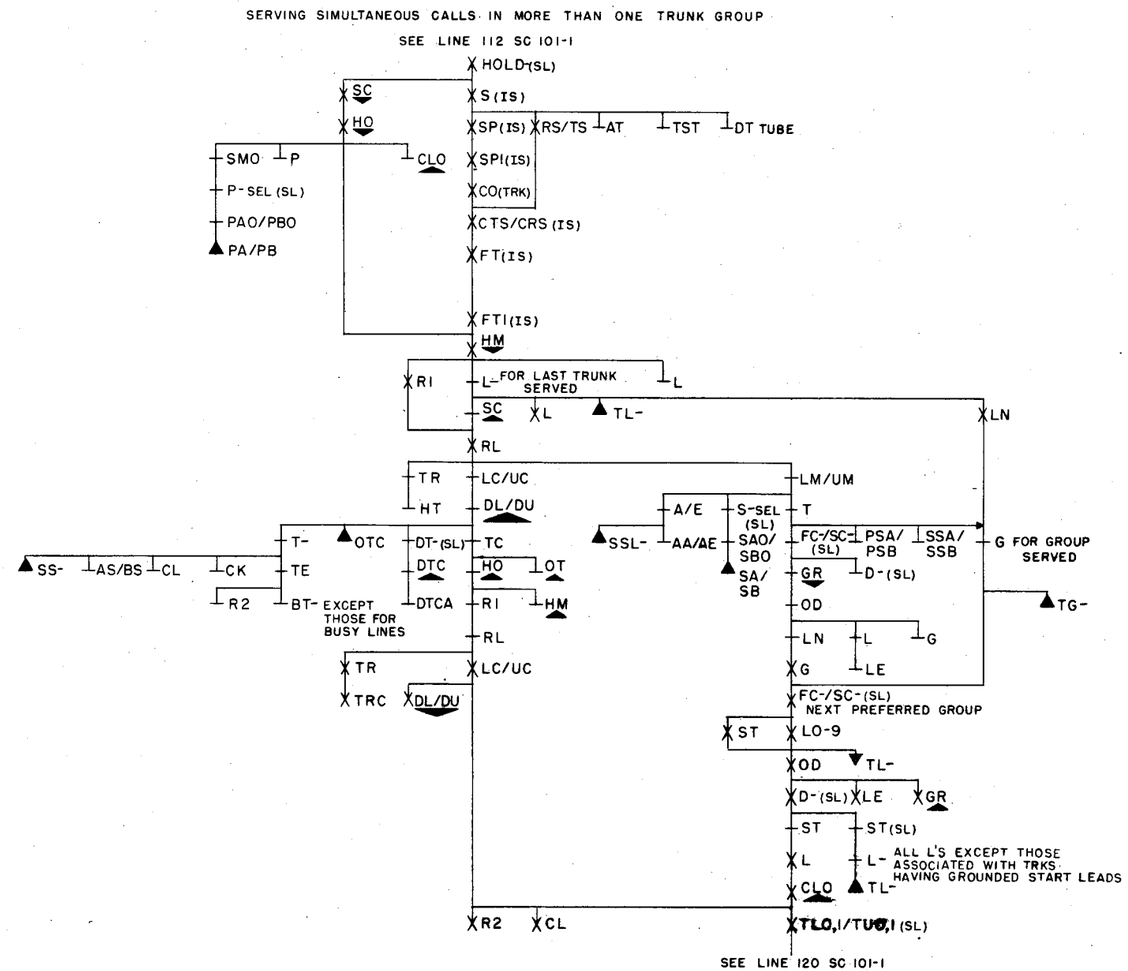

LINK CONTROLLER
SIMULTANEOUS CALLS

NO. 4A TOLL

SC 102-1

BELL TELEPHONE LABORATORIES, INC.
PRINTED IN U. S. A.
ORDER AS BSP ITEM MP-11641