MP-11668

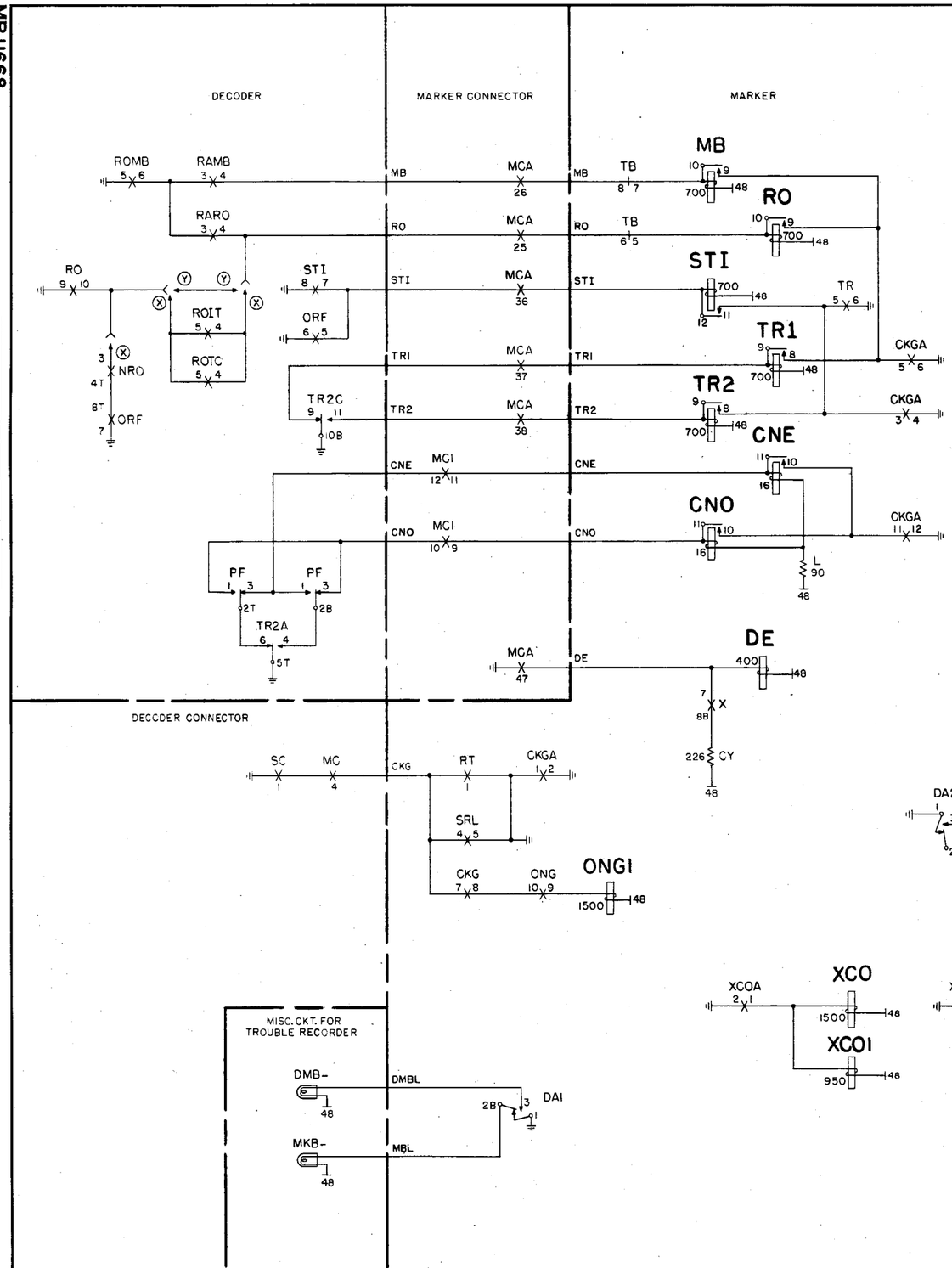

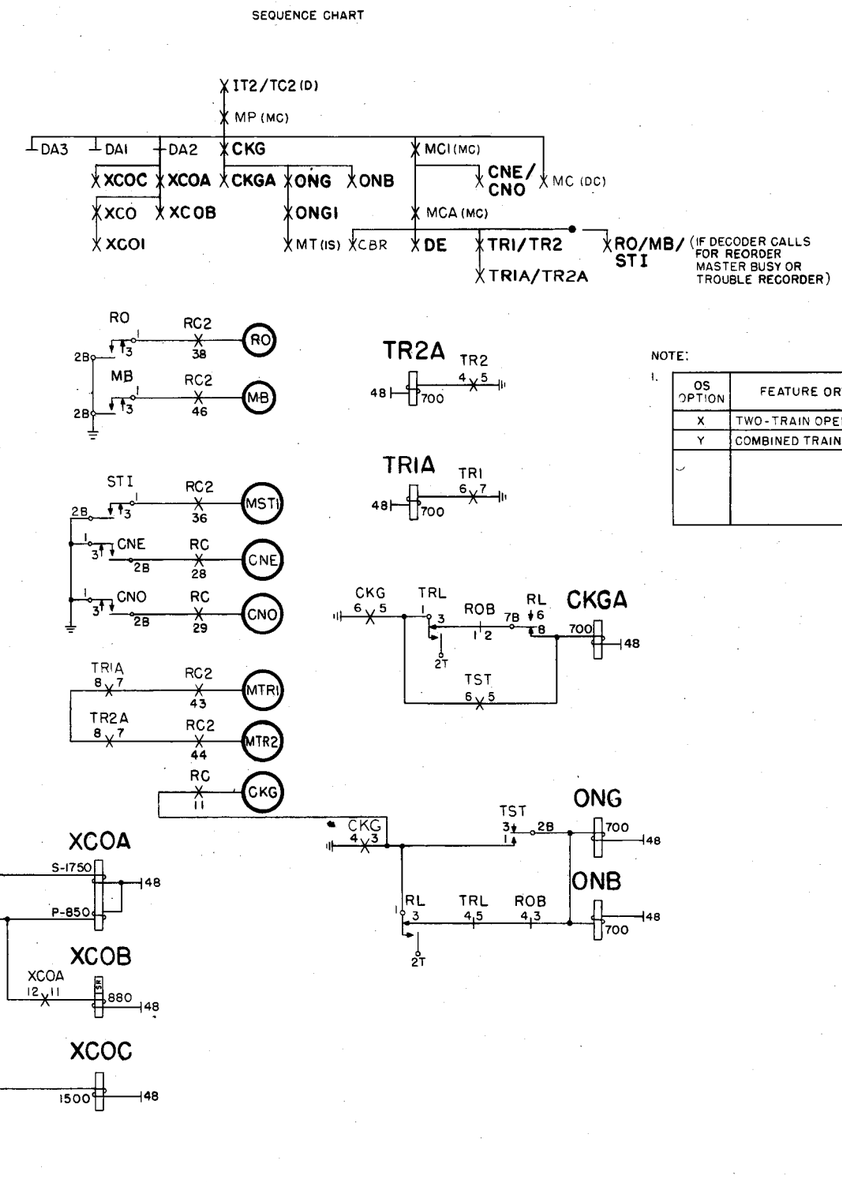

NOTE:

1.

OS OPTION	FEATURE OR OPTION	SD OPTION	SD
X	TWO-TRAIN OPERATION	X	68340-01
Y	COMBINED TRAIN OPERATION	FIG. A	68340-01

DECODER CONNECTOR CKT.	SD-68339-01, ISS. 2
DECODER CKT.	SD-68340-01, ISS. 2
INTERRUPTER FRAME CKT.	SD-68658-01, ISS. 15
MARKER CONNECTOR CKT.	SD-68395-01, ISS. 2
* MARKER CKT.	SD-68388-01, ISS. 2
MISC. CKT. FOR TROUBLE RECORDER	SD-68392-01, ISS. 2

ISSUE	DATE
1	12-5-74
8	8-10-75

MARKER

SEIZURE AND REGISTRATION OF MISC. INFORMATION FROM DECODER

NO. 4A TOLL

OS 190-1

BELL TELEPHONE LABORATORIES, INC.
PRINTED IN U. S. A.
ORDER AS BSP ITEM MP-11668