MP-11670

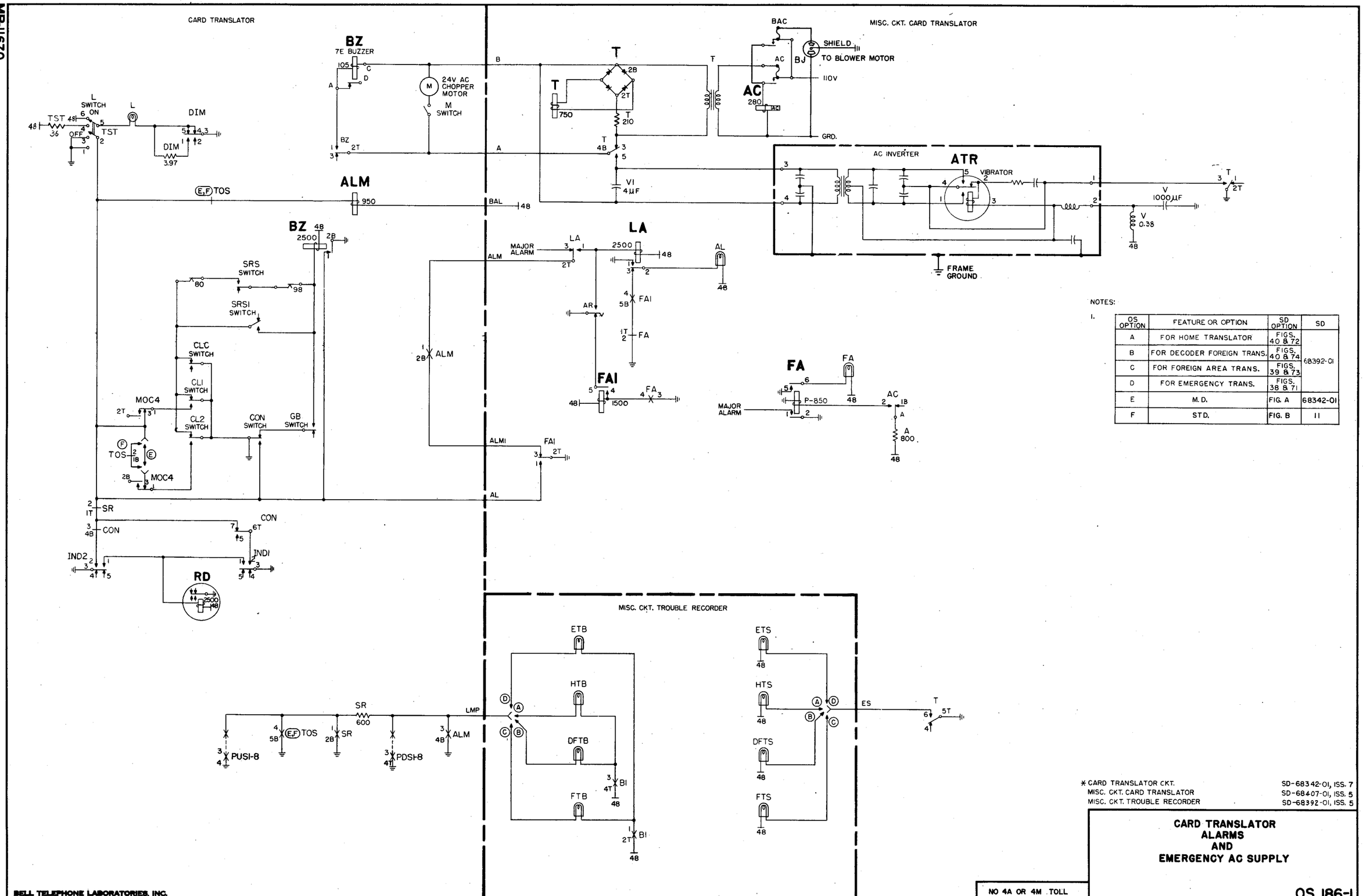

NOTES:

1.

OS OPTION	FEATURE OR OPTION	SD OPTION	SD
A	FOR HOME TRANSLATOR	FIGS. 40 & 72	68392-01
B	FOR DECODER FOREIGN TRANS.	FIGS. 40 & 74	
C	FOR FOREIGN AREA TRANS.	FIGS. 39 & 73	
D	FOR EMERGENCY TRANS.	FIGS. 38 & 71	
E	M. D.	FIG. A	68342-01
F	STD.	FIG. B	11

ISSUE	1	2			
DATE	8-7-61	10-8-63			

* CARD TRANSLATOR CKT. SD-68342-01, ISS. 7
MISC. CKT. CARD TRANSLATOR SD-68407-01, ISS. 5
MISC. CKT. TROUBLE RECORDER SD-68392-01, ISS. 5

CARD TRANSLATOR ALARMS AND EMERGENCY AC SUPPLY

NO 4A OR 4M TOLL

OS 186-1

BELL TELEPHONE LABORATORIES, INC.
PRINTED IN U. S. A.
ORDER AS BSP ITEM MP-11670