MP-11671

ISSUE	DATE
1	8-15-51

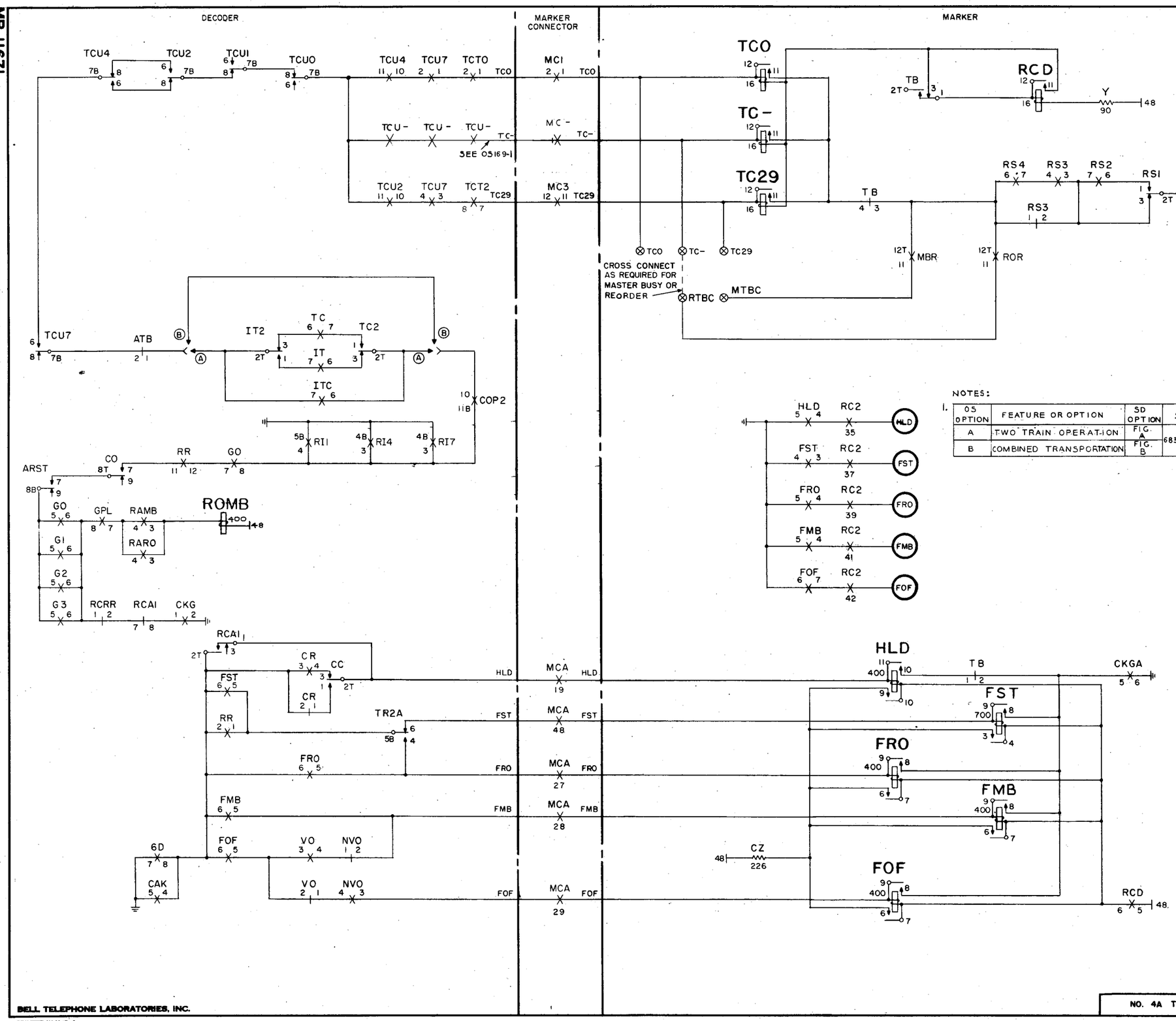

NOTES:

1.

05 OPTION	FEATURE OR OPTION	SD OPTION	SD
A	TWO TRAIN OPERATION	FIG. A	68340-01
B	COMBINED TRANSPORTATION	FIG. B	

TRUNK BLOCK CONNECTOR NUMBERS

TRUNK BLOCK CONN. RELAYS	TROUBLE RECORDER CUT IN RELAY CONTACTS (RCI)		TROUBLE RECORDER PUNCH	
TCO	2	5	TCTO	TCUO
TC1	2	6	TCTO	TCU1
TC2	2	7	TCTO	TCU2
TC3	2	8	TCTO	TCU3
TC4	2	9	TCTO	TCU4
TC5	2	10	TCTO	TCU5
TC6	2	11	TCTO	TCU6
TC7	2	12	TCTO	TCU7
TC8	2	13	TCTO	TCU8
TC9	2	14	TCTO	TCU9
TC10	3	5	TCT1	TCUO
TC11	3	6	TCT1	TCU1
TC12	3	7	TCT1	TCU2
TC13	3	8	TCT1	TCU3
TC14	3	9	TCT1	TCU4
TC15	3	10	TCT1	TCU5
TC16	3	11	TCT1	TCU6
TC17	3	12	TCT1	TCU7
TC18	3	13	TCT1	TCU8
TC19	3	14	TCT1	TCU9
TC20	4	5	TCT2	TCUO
TC21	4	6	TCT2	TCU1
TC22	4	7	TCT2	TCU2
TC23	4	8	TCT2	TCU3
TC24	4	9	TCT2	TCU4
TC25	4	10	TCT2	TCU5
TC26	4	11	TCT2	TCU6
TC27	4	12	TCT2	TCU7
TC28	4	13	TCT2	TCU8
TC29	4	14	TCT2	TCU9

DECODER CKT.	SD-68340-01, ISS. 2
DECODER CONNECTOR CKT.	SD-68339-01, ISS. 2
* MARKER CKT.	SD-68388-01, ISS. 2
MARKER CONNECTOR CKT.	SD-68395-01, ISS. 2

MARKER

REGISTRATION CONTROL

NO. 4A TOLL

OS 191-1

BELL TELEPHONE LABORATORIES, INC.

PRINTED IN U. S. A.

ORDER AS BSP ITEM MP-11671