MP-11676

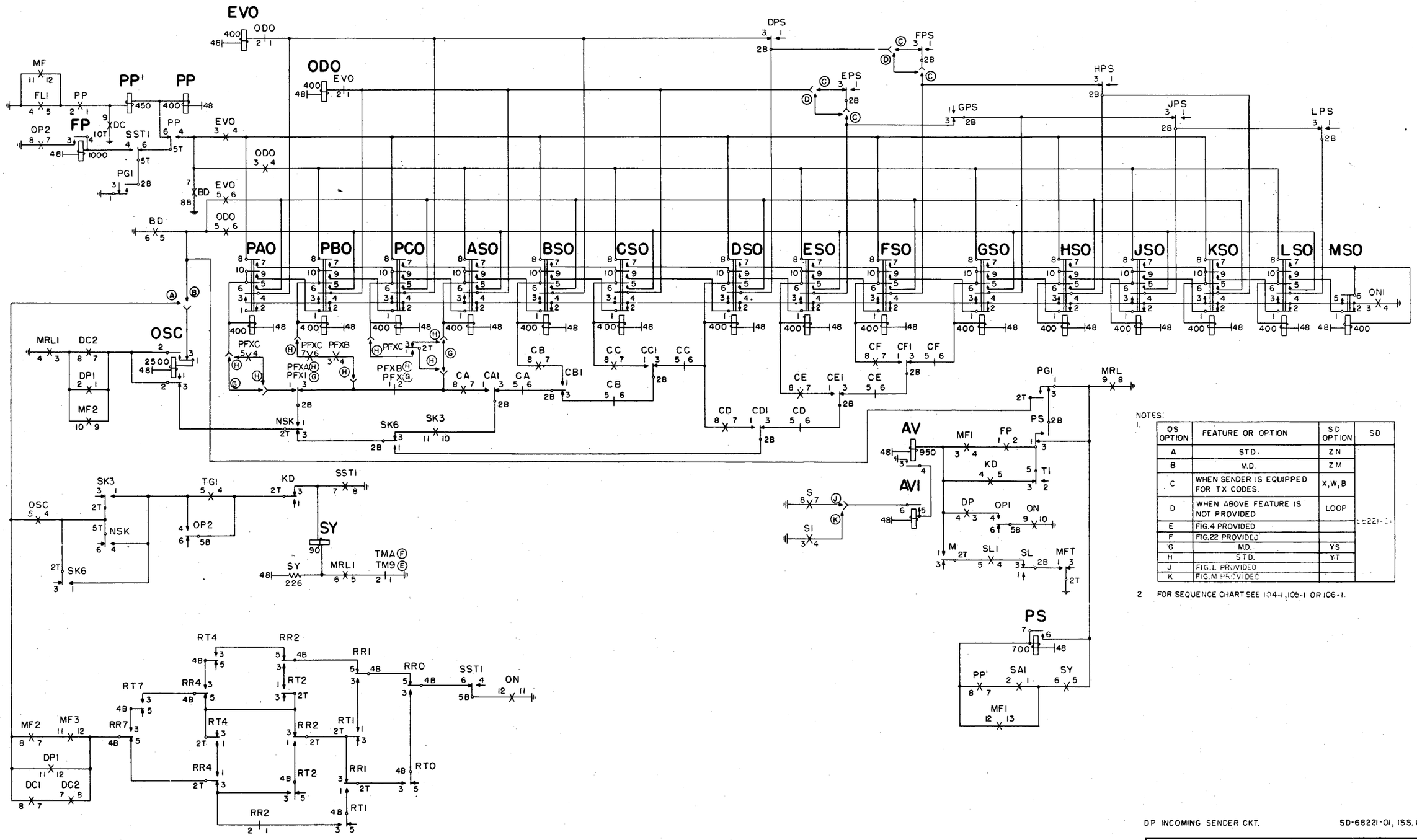

DATE	ISSUE	
8-10-61	1	1-1-5 X 5.8.9
8-19-55	2	6.9

NOTES:
1.

OS OPTION	FEATURE OR OPTION	SD OPTION	SD
A	STD.	ZN	
B	M.D.	ZM	
C	WHEN SENDER IS EQUIPPED FOR TX CODES.	X,W,B	
D	WHEN ABOVE FEATURE IS NOT PROVIDED	LOOP	
E	FIG.4 PROVIDED		
F	FIG.22 PROVIDED		
G	M.D.	YS	
H	STD.	YT	
J	FIG.L PROVIDED		
K	FIG.M PROVIDED		

2 FOR SEQUENCE CHART SEE 104-1, 105-1 OR 106-1.

DP INCOMING SENDER CKT. SD-68221-01, ISS. 17

DP INCOMING SENDER
OUTSTEERING CONTROL

NO. 4A TOLL

OS 126-1

BELL TELEPHONE LABORATORIES, INC.
PRINTED IN U. S. A.
ORDER AS BSP ITEM MP-11676