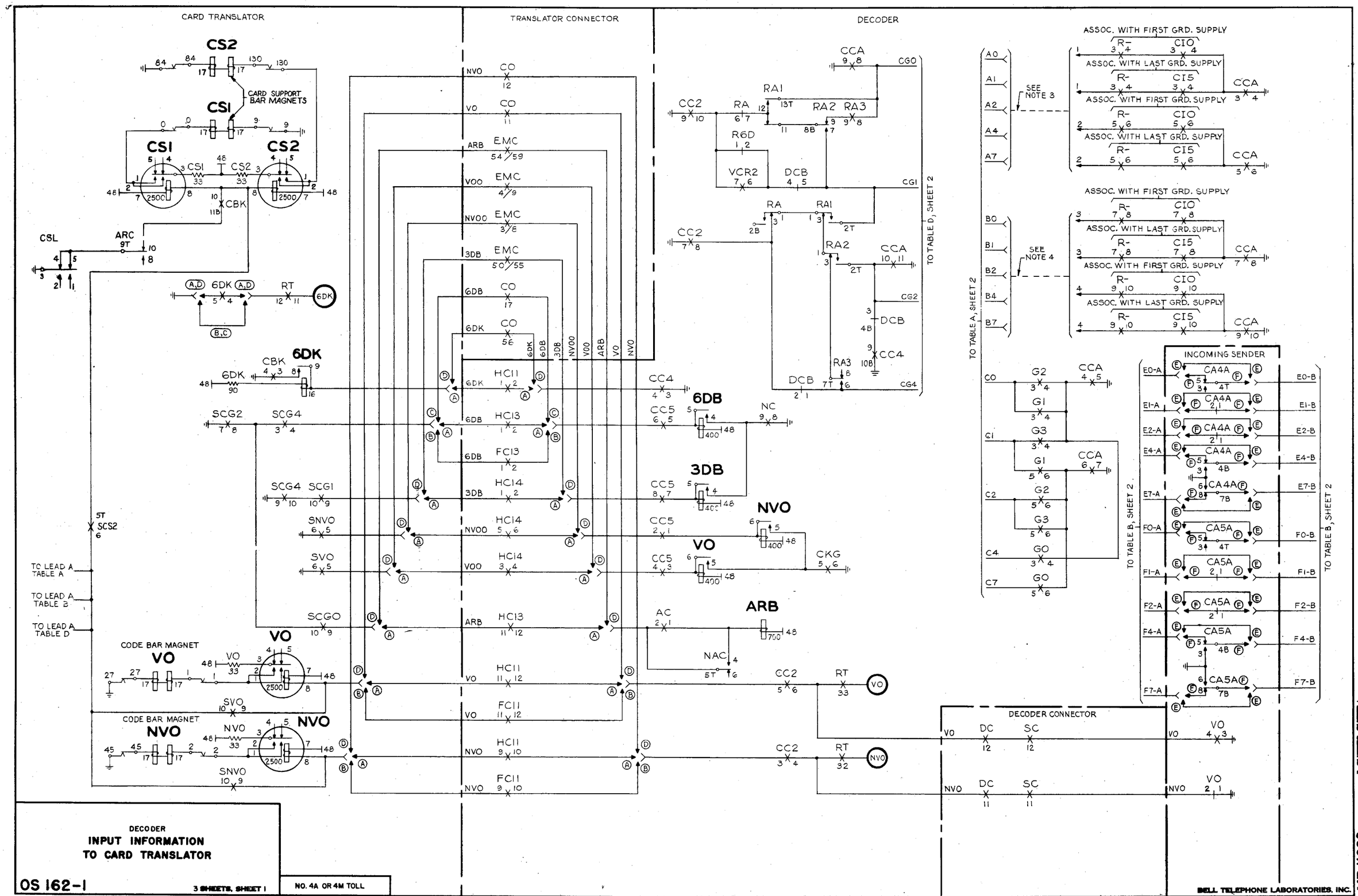

DECODER
INPUT INFORMATION TO CARD TRANSLATOR

OS 162-1

3 SHEETS, SHEET 1

NO. 4A OR 4M TOLL

ORDER AS BSP ITEM MP-11682

BELL TELEPHONE LABORATORIES, INC.

PRINTED IN U. S. A.

MP-11682

3 SHEETS, SHEET 2

ISSUE	DATE
1	6-1-56
2	6-30-58

TABLE A

OPERATION OF A0-D7 CODE BAR MAGNETS

INCOMING SENDER	DECODER CONNECTOR		DECODER												TRANSLATOR CONNECTOR	CARD TRANSLATOR							
REGISTER RELAY CONTACTS	CONNECTOR RELAY CONTACTS		TROUBLE RECORDER CUT-IN RELAY CONTACTS		PUNCH	CODE CUT-IN RELAY CONTACTS			LEAD TO SHEET 1	HOME TRANSLATOR CONNECTOR RELAY CONTACTS			DECODER FOREIGN AREA TRANSLATOR CONN. RELAY CONTACTS			CONNECTOR RELAY CONTACTS	CODE BAR RELAYS	RES.	JACK SPRING	CODE BAR MAGNETS	JACK SPRING	CODE BAR SLAVE RELAY CONTACTS		
A0	20	20	RTI	0	A0	1T	CC1	2T	A0	4T	HC11	3T	4T	FC11	3T	20	A0	A0	18	A0	9	5T	SA0	6T
A1	21	21	RTI	1	A1	3T	CC1	4T	A1	6T	HC11	5T	6T	FC11	5T	21	A1	A1	19	A1	27	9T	SA1	10T
A2	22	22	RTI	2	A2	5T	CC1	6T	A2	8T	HC11	7T	8T	FC11	7T	22	A2	A2	20	A2	45	9T	SA2	10T
A4	23	23	RTI	3	A4	7T	CC1	8T	A4	10B	HC11	9B	10B	FC11	9B	23	A4	A4	21	A4	63	9T	SA4	10T
A7	24	24	RTI	4	A7	9T	CC1	10T	A7	12B	HC11	11B	12B	FC11	11B	24	A7	A7	22	A7	81	9T	SA7	10T
B0	30	30	RT	54	B0	1B	CC1	2B	B0	2B	HC11	1B	2B	FC11	1B	30	B0	B0	36	B0	10	5T	SB0	6T
B1	31	31	RT	55	B1	3B	CC1	4B	B1	4B	HC11	3B	4B	FC11	3B	31	B1	B1	37	B1	28	9T	SB1	10T
B2	32	32	RT	56	B2	5B	CC1	6B	B2	6B	HC11	5B	6B	FC11	5B	32	B2	B2	38	B2	46	9T	SB2	10T
B4	33	33	RT	57	B4	7B	CC1	8B	B4	8B	HC11	7B	8B	FC11	7B	33	B4	B4	39	B4	64	9T	SB4	10T
B7	34	34	RT	58	B7	9B	CC1	10B	B7	12T	HC12	11T	12T	FC12	11T	34	B7	B7	40	B7	82	9T	SB7	10T
CC	4C	4C	RT	49	C0	1T	CC2	2T	C0	2T	HC12	1T	2T	FC12	1T	40	C0	C0	54	C0	10	5T	SC0	6T
C1	41	41	RT	50	C1	3T	CC2	4T	C1	4T	HC12	3T	4T	FC12	3T	41	C1	C1	55	C1	28	9T	SC1	10T
C2	42	42	RT	51	C2	5T	CC2	6T	C2	6T	HC12	5T	6T	FC12	5T	42	C2	C2	56	C2	46	9T	SC2	10T
C4	43	43	RT	52	C4	7T	CC2	8T	C4	8T	HC12	7T	8T	FC12	7T	43	C4	C4	57	C4	64	9T	SC4	10T
C7	44	44	RT	53	C7	9T	CC2	10T	C7	10T	HC12	9T	10T	FC12	9T	44	C7	C7	78	C7	82	9T	SC7	10T
D0	25	25	RT	44	D0	1T	CC3	2T	NONE	2B	HC12	1B	2B	FC12	1B	25	D0	D0	72	D0	11	5T	SD0	6T
D1	26	26	RT	45	D1	3T	CC3	4T	NONE	4B	HC12	3B	4B	FC12	3B	26	D1	D1	73	D1	29	9T	SD1	10T
D2	27	27	RT	46	D2	5T	CC3	6T	NONE	6B	HC12	5B	6B	FC12	5B	27	D2	D2	74	D2	47	9T	SD2	10T
D4	28	28	RT	47	D4	7T	CC3	8T	NONE	8B	HC12	7B	8B	FC12	7B	28	D4	D4	75	D4	65	9T	SD4	10T
D7	29	29	RT	48	D7	9T	CC3	10T	NONE	10B	HC12	9B	10B	FC12	9B	29	D7	D7	76	D7	83	9T	SD7	10T

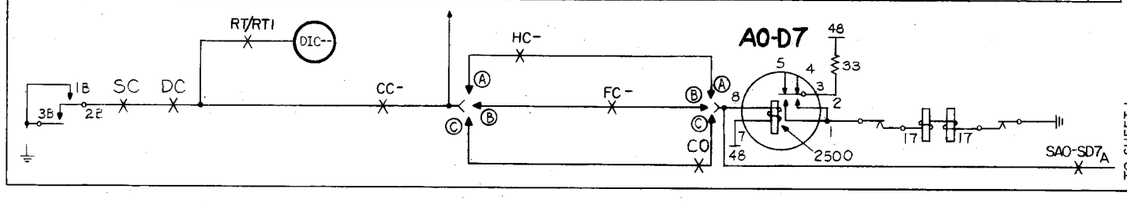

TABLE B

OPERATION OF E0-F7 CODE BAR MAGNETS

INCOMING SENDER			DECODER CONNECTOR		DECODER								TRANSLATOR CONNECTOR	CARD TRANSLATOR							
REGISTER RELAY CONTACTS	DESIGNATION OF LEAD TO SHEET 1		CONNECTOR RELAY CONTACTS		TBL. RCDR. CUT-IN RELAY CONTACTS	PUNCH	CODE CUT-IN RELAY CONTACTS			HOME TRANSLATOR CONN. RELAY CONTACTS		DECODER FOREIGN-AREA CONN. RELAY CONTACTS		CONNECTOR RELAY CONTACTS	CODE BAR RELAYS	RES.	JACK SPRING	CODE BAR MAGNETS	JACK SPRING	CODE BAR SLAVE RELAY CONTACTS		
E0	E0-A	E0-B	35	35	39	E0	1B	CC3	2B	4T	3T	4T	3T	35	E0	E0	90	E0	11	5T	SE0	6T
E1	E1-A	E1-B	36	36	40	E1	3B	CC3	4B	6T	5T	6T	5T	36	E1	E1	91	E1	29	9T	SE1	10T
E2	E2-A	E2-B	37	37	41	E2	5B	CC3	6B	8T	7T	8T	7T	37	E2	E2	92	E2	47	9T	SE2	10T
E4	E4-A	E4-B	38	38	42	E4	7B	CC3	8B	10T	9T	10T	9T	38	E4	E4	93	E4	65	9T	SE4	10T
E7	E7-A	E7-B	39	39	43	E7	9B	CC3	10B	12T	11T	12T	11T	39	E7	E7	94	E7	83	9T	SE7	10T
F0	F0-A	F0-B	45	45	34	F0	1T	CC4	2T	2T	1T	2T	1T	45	F0	F0	108	F0	12	5T	SF0	6T
F1	F1-A	F1-B	46	46	35	F1	3T	CC4	4T	4B	3B	4B	3B	46	F1	F1	109	F1	30	9T	SF1	10T
F2	F2-A	F2-B	47	47	36	F2	5T	CC4	6T	6B	5B	6B	5B	47	F2	F2	110	F2	48	9T	SF2	10T
F4	F4-A	F4-B	48	48	37	F4	7T	CC4	8T	8B	7B	8B	7B	48	F4	F4	111	F4	66	9T	SF4	10T
F7	F7-A	F7-B	49	49	38	F7	9T	CC4	10T	10B	9B	10B	9B	49	F7	F7	112	F7	84	9T	SF7	10T

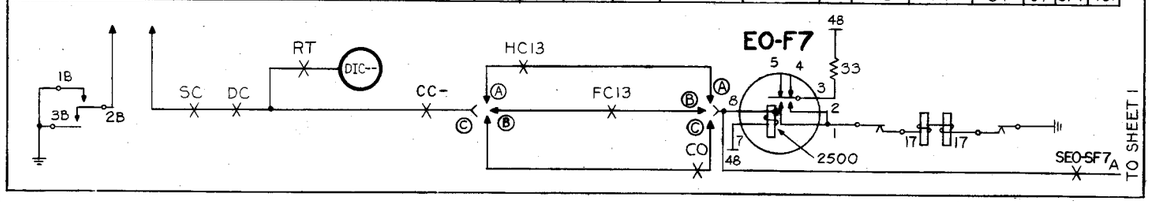

TABLE C

OPERATION OF CODE BAR SLAVE RELAYS

CARD TRANSLATOR									
JACK SPRINGS	CODE BAR MAGNET CONTACTS	JACK SPRINGS	CODE BAR SLAVE RELAYS & CONTACTS		RES.	TROUBLE RECORDER CUT-IN RELAY CONTACTS			PUNCH
5 & 23	CS1	13	4B	SCS1	3B	SCS1	8B	RT	7B	CS1
5 & 23	VO	14	7T	SVO	8T	SVO	6B	RT	5B	VO
5 & 23	NVO	15	7T	SNVO	8T	SNVO	4B	RT	3B	NVO
5 & 23	A0	31	4B	SA0	3B	SA0	4T	RT3	3T	A0
5 & 23	A1	32	6B	SA1	5B	SA1	6T	RT3	5T	A1
5 & 23	A2	33	6B	SA2	5B	SA2	8T	RT3	7T	A2
5 & 23	A4	34	6B	SA4	5B	SA4	10T	RT3	9T	A4
5 & 23	A7	35	6B	SA7	5B	SA7	12T	RT3	11T	A7
5 & 23	B0	49	4B	SB0	3B	SB0	4B	RT3	3B	B0
5 & 23	B1	50	6B	SB1	5B	SB1	6B	RT3	5B	B1
5 & 23	B2	51	6B	SB2	5B	SB2	8B	RT3	7B	B2
5 & 23	B4	52	6B	SB4	5B	SB4	10B	RT3	9B	B4
5 & 23	B7	53	6B	SB7	5B	SB7	12B	RT3	11B	B7
5 & 23	C0	67	4B	SC0	3B	SC0	4T	RT2	3T	C0
5 & 23	C1	68	6B	SC1	5B	SC1	6T	RT2	5T	C1
5 & 23	C2	69	6B	SC2	5B	SC2	8T	RT2	7T	C2
5 & 23	C4	70	6B	SC4	5B	SC4	10T	RT2	9T	C4
5 & 23	C7	71	6B	SC7	5B	SC7	12T	RT2	11T	C7
41 & 59	D0	85	4B	SD0	3B	SD0	4B	RT2	3B	D0
41 & 59	D1	86	6B	SD1	5B	SD1	6B	RT2	5B	D1
41 & 59	D2	87	6B	SD2	5B	SD2	8B	RT2	7B	D2
41 & 59	D4	88	6B	SD4	5B	SD4	10B	RT2	9B	D4
41 & 59	D7	89	6B	SD7	5B	SD7	12B	RT2	11B	D7
41 & 59	E0	103	4B	SE0	3B	SE0	4T	RT1	3T	E0
41 & 59	E1	104	6B	SE1	5B	SE1	6T	RT1	5T	E1
41 & 59	E2	105	6B	SE2	5B	SE2	8T	RT1	7T	E2
41 & 59	E4	106	6B	SE4	5B	SE4	10T	RT1	9T	E4
41 & 59	E7	107	6B	SE7	5B	SE7	12T	RT1	11T	E7
41 & 59	F0	121	4B	SF0	3B	SF0	4B	RT1	3B	F0
41 & 59	F1	122	6B	SF1	5B	SF1	6B	RT1	5B	F1
41 & 59	F2	123	6B	SF2	5B	SF2	8B	RT1	7B	F2
41 & 59	F4	124	6B	SF4	5B	SF4	10B	RT1	9B	F4
41 & 59	F7	125	6B	SF7	5B	SF7	12B	RT1	11B	F7
41 & 59	CG0	139	8B	SCG0	7B	SCG0	2B	RT1	1B	CG0
41 & 59	CG1	140	7B	SCG1	8B	SCG1	10T	RT	9T	CG1
41 & 59	CG2	141	10B	SCG2	9B	SCG2	12T	RT	11T	CG2
41 & 59	CG4	142	8B	SCG4	7B	SCG4	2B	RT	1B	CG4
41 & 59	CS2	143	4B	SCS2	3B	SCS2	10B	RT	9B	CS2

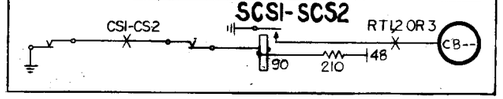

TABLE D

OPERATION OF CARD GROUPING CODE BAR MAGNETS

DECODER					TRANSLATOR CONNECTOR	CARD TRANSLATOR						
DESIGNATION OF LEAD TO SHEET 1	HOME TRANSLATOR CONN. RELAY CONTACTS		DECODER FOREIGN-AREA RELAY CONTACTS		CONNECTOR RELAY CONTACTS	CODE BAR RELAYS	RES.	JACK SPRING	CODE BAR MAGNETS	JACK SPRING	CODE BAR SLAVE RELAY CONTACTS	
CG0	3T	4T	3T	4T	50	CG0	CG0	126	CG0	12	9T	SCG0	10T
CG1	5T	6T	5T	6T	51	CG1	CG1	127	CG1	30	9T	SCG1	10T
CG2	7T	8T	7T	8T	52	CG2	CG2	128	CG2	48	9T	SCG2	10T
CG4	9T	10T	9T	10T	53	CG4	CG4	129	CG4	66	9T	SCG4	10T

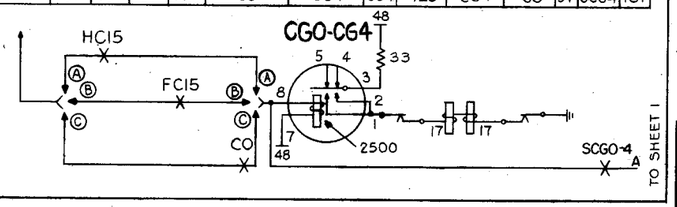

NOTES:

1.

OS OPTION	FEATURE OR OPTION	SD OPTION	SD
A	FOR HOME TRANSLATOR	FIG.14	68340-01
		Y	68342-01
B	FOR DECODER FOREIGN TRANSLATOR	FIG. 15	68340-01
		W	68343-01
C	FOR FOREIGN TRANSLATOR.	Z	68341-01
		X	68342-01
D	FOR EMERGENCY TRANSLATOR	FIG.3 & Y	68341-01
		Z	68342-01
E	1 DIGIT TX CALLS	LOOPED WIRING	68221-01 68222-01 68423-01 68424-01
F	2,3,OR 2&3 DIGIT TX CALLS	X,W,B	68221-01 68423-01 68424-01
		X,W,K	68222-01

2. CSI & 2 MAGNETS ARE ENERGIZED BY CSI & 2 RELAYS OPERATED, BUT DO NOT OPERATE UNTIL CARD SUPPORT LIFT MAGNETS ARE DE-ENERGIZED.

3. LEADS 1 & 2 CONNECT TO A0-A7 AS REQUIRED TO AGREE WITH 1ST DIGIT OF ROUTE RELAY NUMBER.

4. LEADS 3 & 4 CONNECT TO B0-B7 AS REQUIRED TO AGREE WITH 2ND DIGIT OF ROUTE RELAY NUMBER.

SEQUENCE CHART

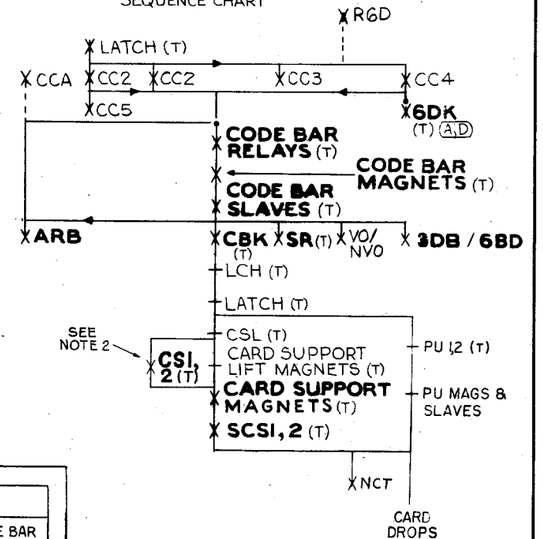

INCOMING SENDER CKT DP 4M	SD-68423-01	ISS. 2
INCOMING SENDER CKT MF 4M	SD-68424-01	ISS. 4
CARD TRANSLATOR CKT.	SD-68342-01,	ISS. 8
*DECODER CKT.	SD-68340-01,	ISS. 8
DECODER CONNECTOR CKT.	SD-68339-01,	ISS. 4
INCOMING SENDER CKT. DP 4A	SD-68221-01,	ISS. 14
INCOMING SENDER CKT. MF 4A	SD-68222-01,	ISS. 16
TRANSLATOR CONNECTOR CKT.	SD-68341-01,	ISS. 6

DECODER

INPUT INFORMATION TO CARD TRANSLATOR

3 SHEETS, SHEET 2

OS 162-1

NO. 4A OR 4M TOLL

BELL TELEPHONE LABORATORIES, INC.

PRINTED IN U. S. A.

ORDER AS BSP ITEM MP-11682

MP-11682

3 SHEETS, SHEET 3

ISSUE	1	2
DATE	9-17-51	9-30-53

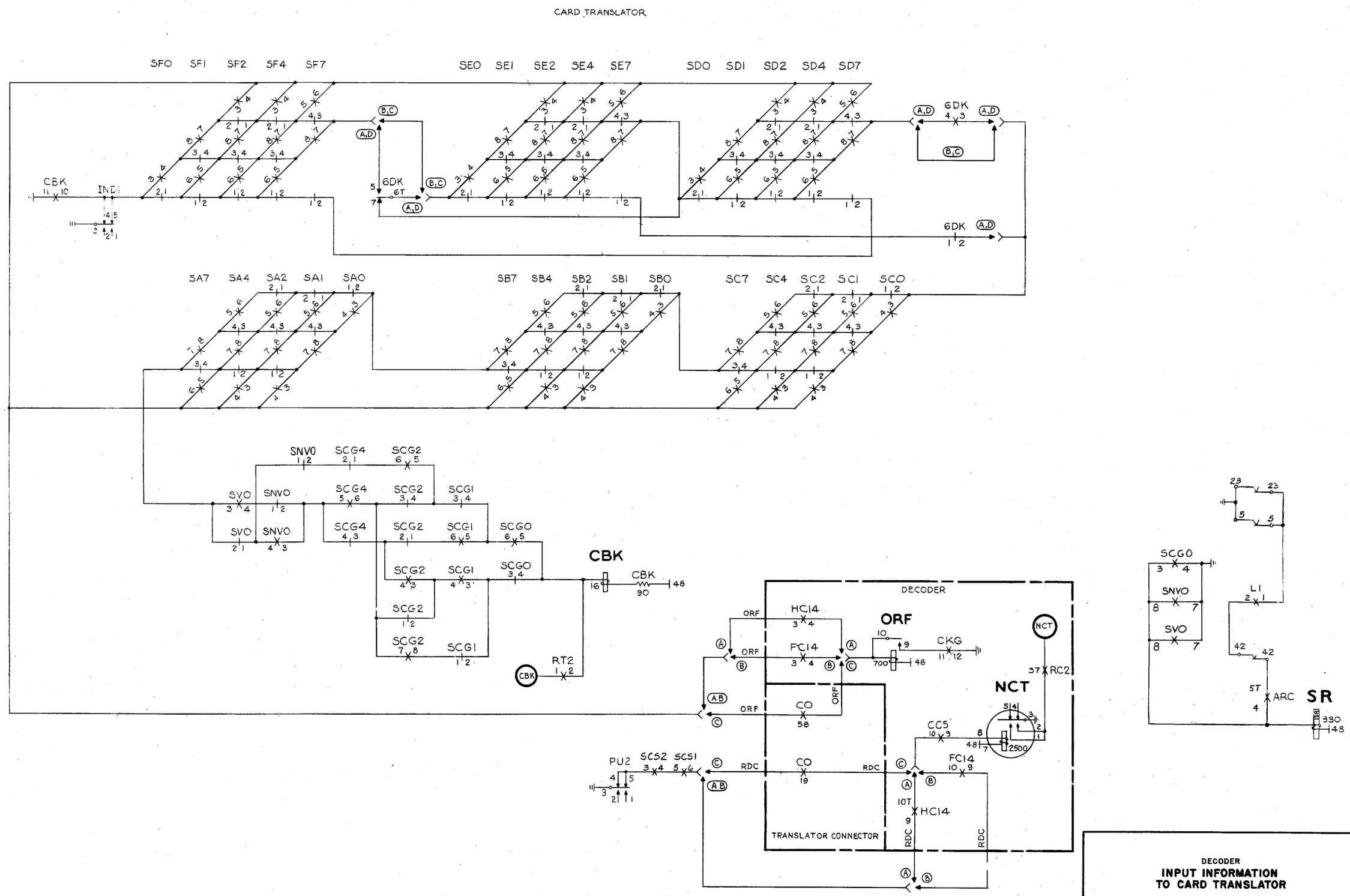

DECODER
INPUT INFORMATION TO CARD TRANSLATOR

NO. 4A OR 4M TOLL

3 SHEETS, SHEET 3

OS 162-1

BELL TELEPHONE LABORATORIES, INC.

PRINTED IN U. S. A.

ORDER AS BSP ITEM MP-11682