MP-11691

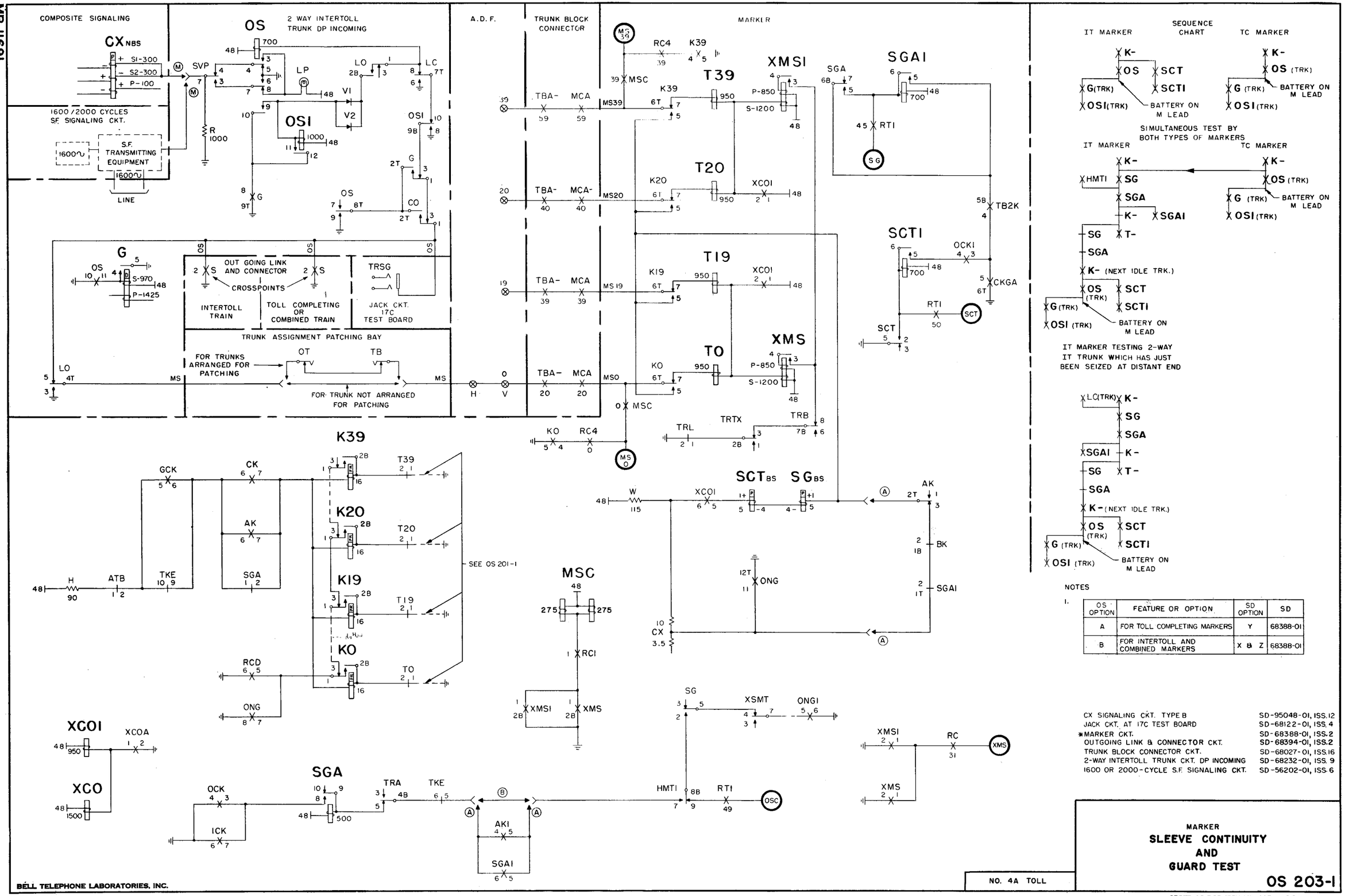

NOTES

1.

OS OPTION	FEATURE OR OPTION	SD OPTION	SD
A	FOR TOLL COMPLETING MARKERS	Y	68388-01
B	FOR INTERTOLL AND COMBINED MARKERS	X & Z	68388-01

CX SIGNALING CKT. TYPE B	SD-95048-01, ISS.12
JACK CKT. AT 17C TEST BOARD	SD-68122-01, ISS. 4
*MARKER CKT.	SD-68388-01, ISS.2
OUTGOING LINK & CONNECTOR CKT.	SD-68394-01, ISS.2
TRUNK BLOCK CONNECTOR CKT.	SD-68027-01, ISS.16
2-WAY INTERTOLL TRUNK CKT. DP INCOMING	SD-68232-01, ISS. 9
1600 OR 2000-CYCLE S.F. SIGNALING CKT.	SD-56202-01, ISS. 6

ISSUE		
DATE		
8-30-51	1	A.S.C. & B.B.

MARKER
SLEEVE CONTINUITY AND GUARD TEST

NO. 4A TOLL

OS 203-1

BELL TELEPHONE LABORATORIES, INC.
PRINTED IN U. S. A.
ORDER AS BSP ITEM MP-MP-11691