MP-11695

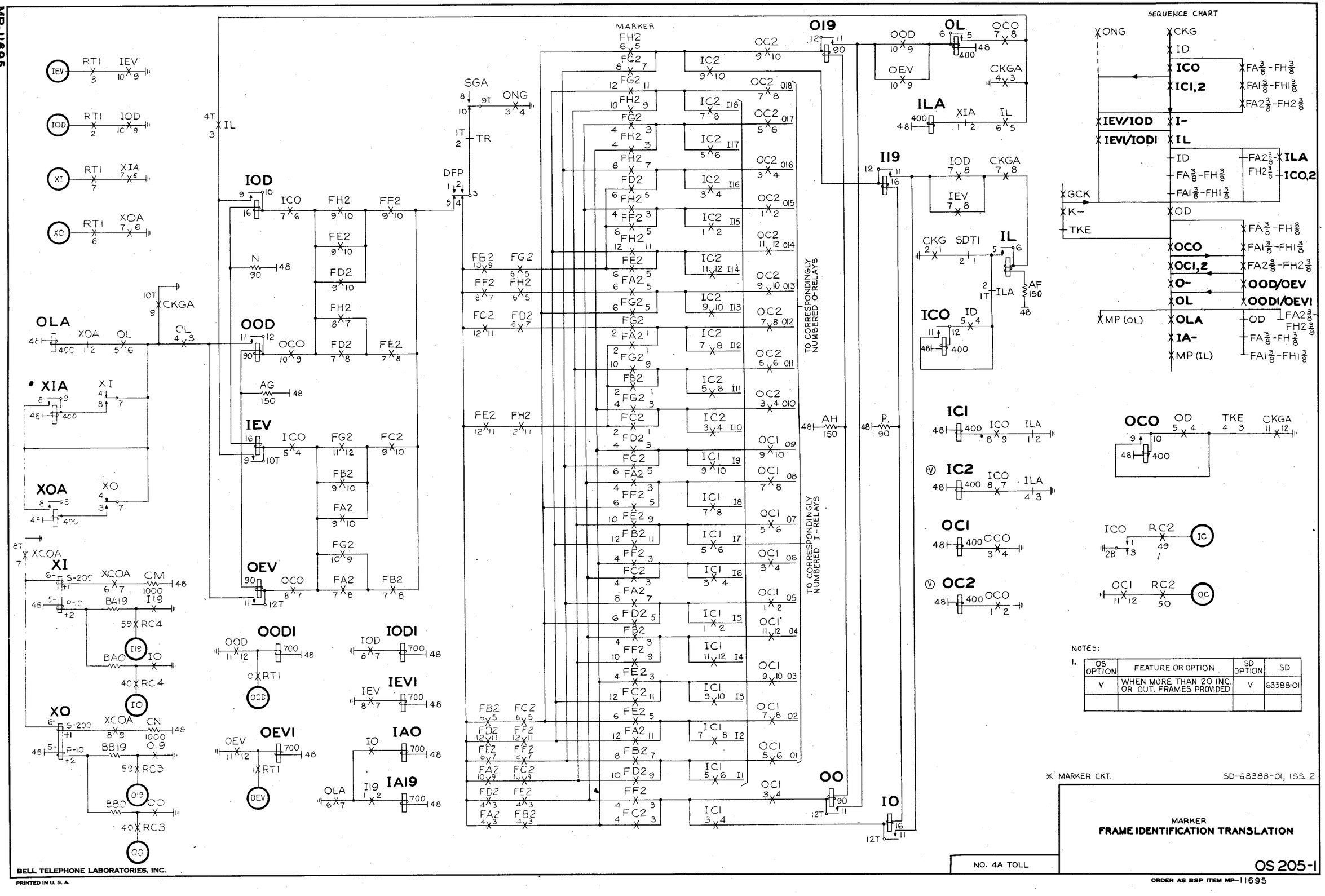

NOTES:

1.

OS OPTION	FEATURE OR OPTION	SD OPTION	SD
V	WHEN MORE THAN 20 INC. OR OUT. FRAMES PROVIDED	V	68388-01

✱ MARKER CKT.

SD-68388-01, ISS. 2

MARKER
FRAME IDENTIFICATION TRANSLATION

NO. 4A TOLL

OS 205-1

BELL TELEPHONE LABORATORIES, INC.

PRINTED IN U. S. A.

ORDER AS BSP ITEM MP-11695