MP-11699

ISSUE	1	2
DATE	5-14-51	

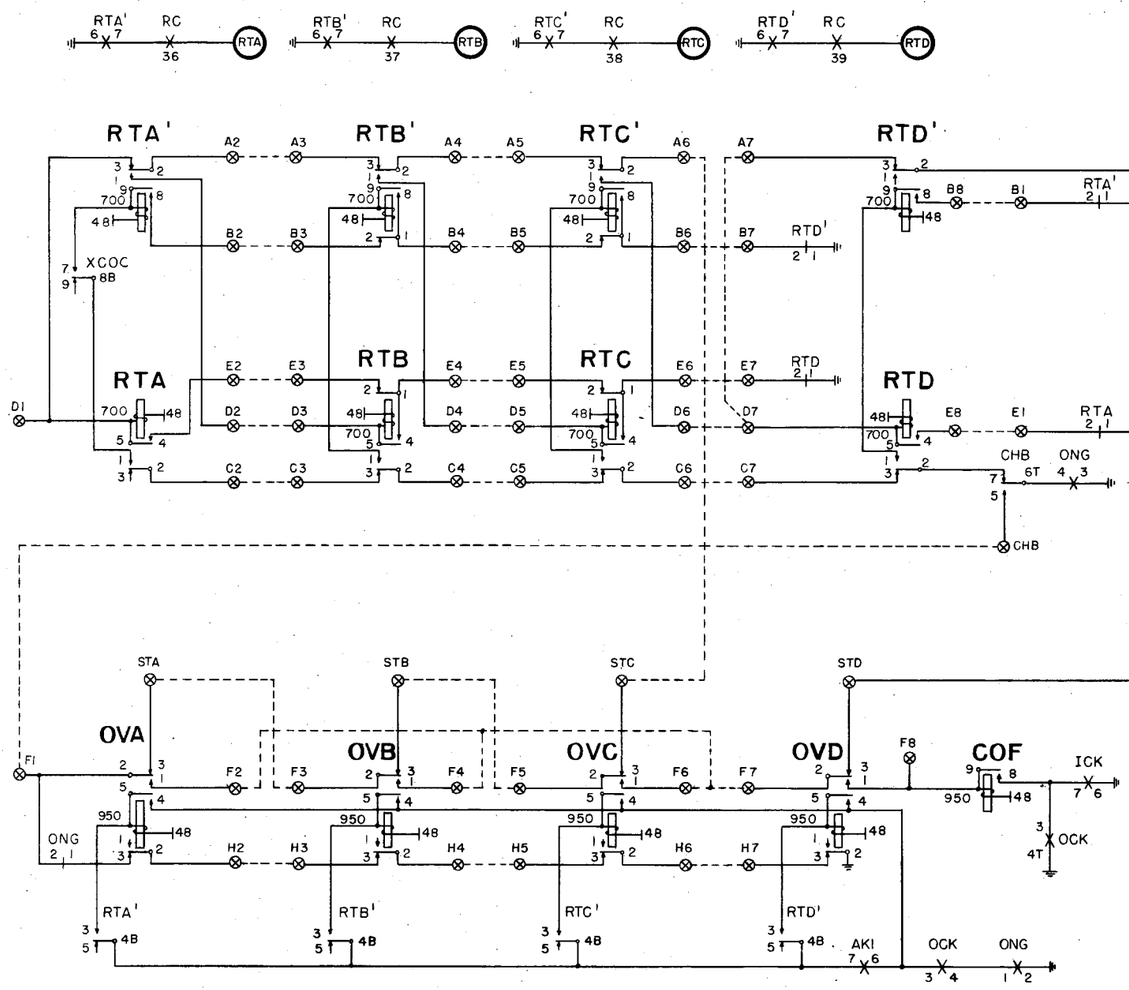

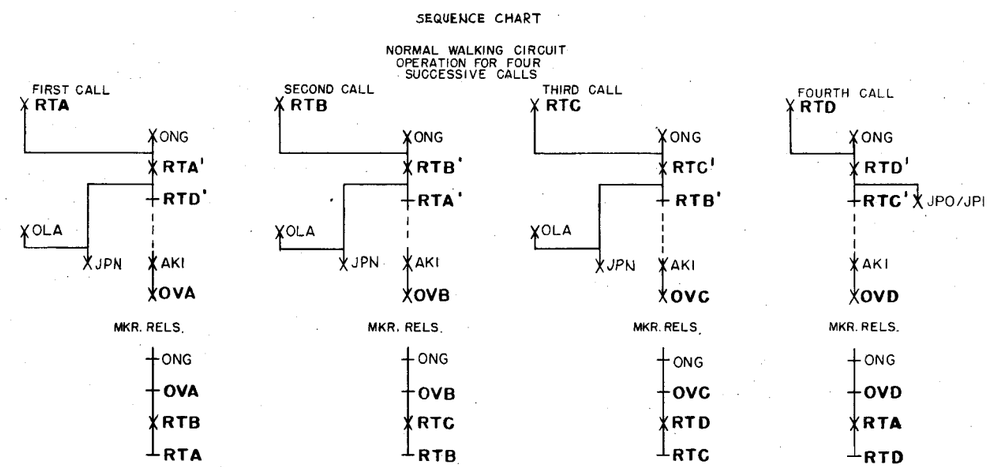

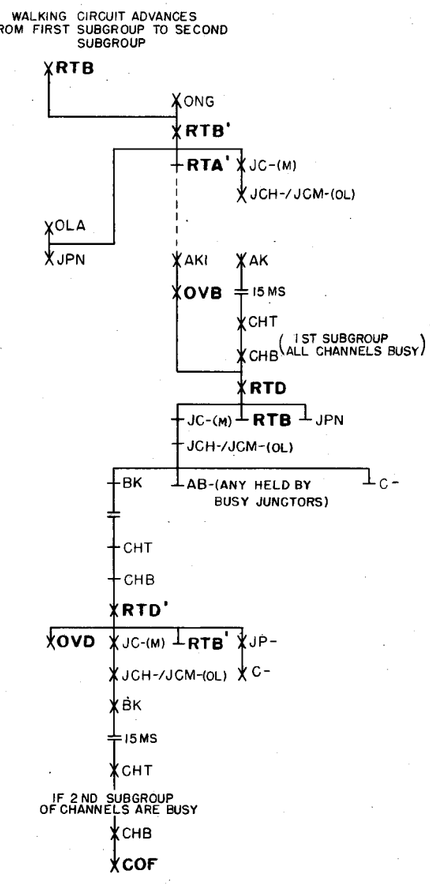

MARKER CKT.

SD-68388-01, ISS. 2

MARKER
CHANNELS BUSY JUNCTOR WALKING CIRCUIT 6 INCOMING AND 6 OUTGOING FRAMES

NO. 4A TOLL

OS 213-1

BELL TELEPHONE LABORATORIES, INC.
PRINTED IN U. S. A.

ORDER AS BSP ITEM MP-11699