MP-11700

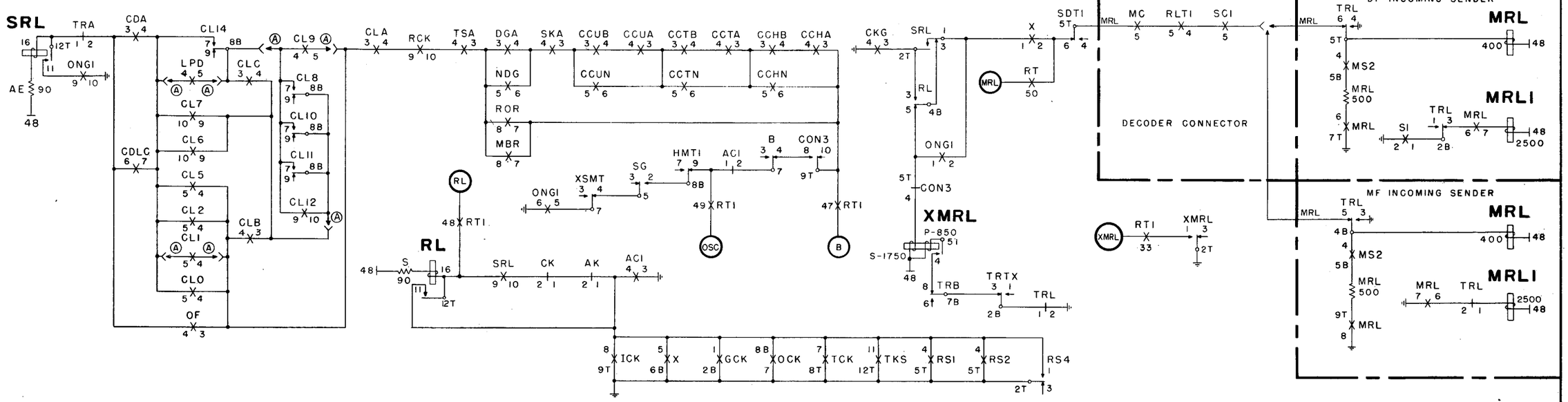

SEQUENCE CHART

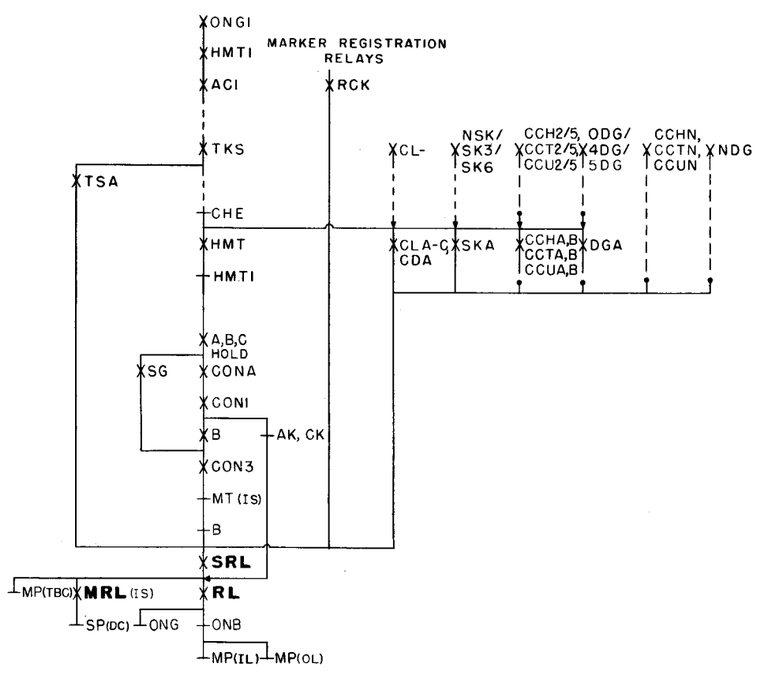

NOTES:

1.

OS OPTION	FEATURE OR OPTION	SD OPTION	SD
A	FOR COMBINED MARKERS	X	68388-01
	FOR TOLL COMPLETING MKRS.	Y	

DP INCOMING SDR. CKT.	SD-68221-01, ISS. 12
* MARKER CKT.	SD-68388-01, ISS. 2
DECODER CONNECTOR CKT.	SD-68339-01, ISS. 2
MF INCOMING SDR. CKT.	SD-68222-01, ISS. 12

ISSUE	DATE
1	5-21-57

MARKER

REGULAR RELEASE

NO. 4A TOLL

OS 217-1

BELL TELEPHONE LABORATORIES, INC.

PRINTED IN U. S. A.

ORDER AS BSP ITEM MP-11700