RECEIVING CKT - MF PULSING

SEE OS 134-1

NOTES:

1 BATTERY FEED TO CIRCUITS SHOWN ON THIS SHEET IS THROUGH THE FILTER ILLUSTRATED EXCEPT BATTERY ON SECONDARY WINDING OF KP1

2.

OS OPTION	FEATURE OR OPTION	SD OPTION	SD
A	M.D.	ZJ	95087-01
B	STD.	ZK	95087-01
C	M.D.	XC	68222-01
D	STD.	XD	
E	M.D.	G	
F	STD.	F	
G	ALL LPD-20C CALLS REQUIRE 7 DIGITS REGISTERED IN SENDER	XE	
H	THREE FREQUENCY DETECTION NOT PROVIDED	XG	68222-01
J	THREE FREQUENCY DETECTION PROVIDED	XH	68222-01

INCOMING SENDER CKT. MF SD-68222-01, ISS. 17
RECEIVING CKT. MF PULSING SD-95087-01, ISS. 27

MF INCOMING SENDER
REGISTRATION
WITH
RECEIVING CKT. SD-95087

OS 135-1 3 SHEETS, SHEET 1

NO. 4A TOLL

ORDER AS BSP ITEM MP- 11722

TO SHEET 2

ISSUE	1	2	
DATE	11-26-51	8-18-53	

3 SHEETS, SHEET 1

MP-11722

BELL TELEPHONE LABORATORIES, INC.

PRINTED IN U. S. A.

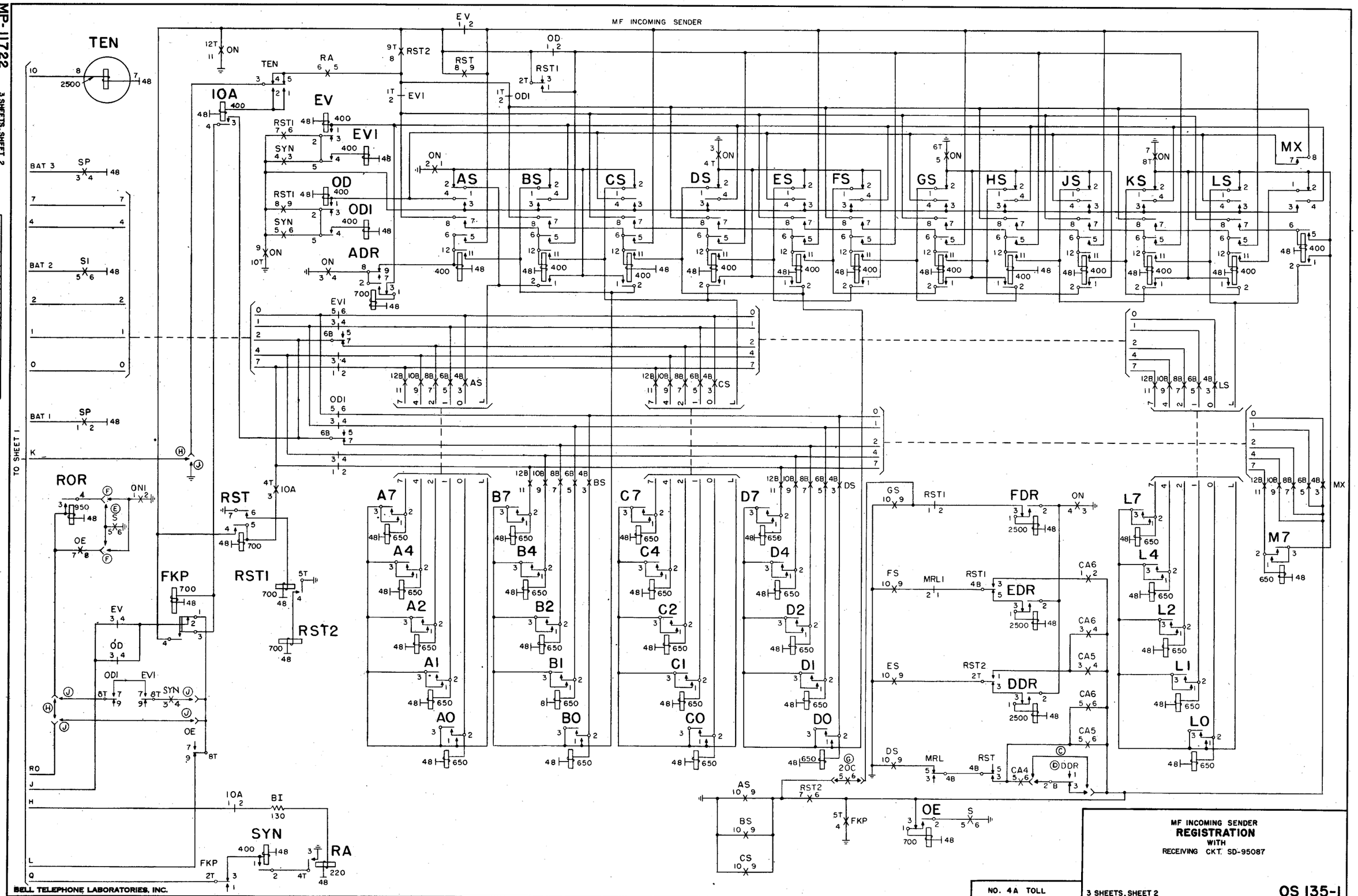

MF INCOMING SENDER
REGISTRATION
WITH
RECEIVING CKT. SD-95087

MP-11722
3 SHEETS, SHEET 2

ISSUE	1	2
DATE	11-26-51	8-18-53

ISSUE	DATE
1	11-26-51
2	6-16-53

SEQUENCE CHART

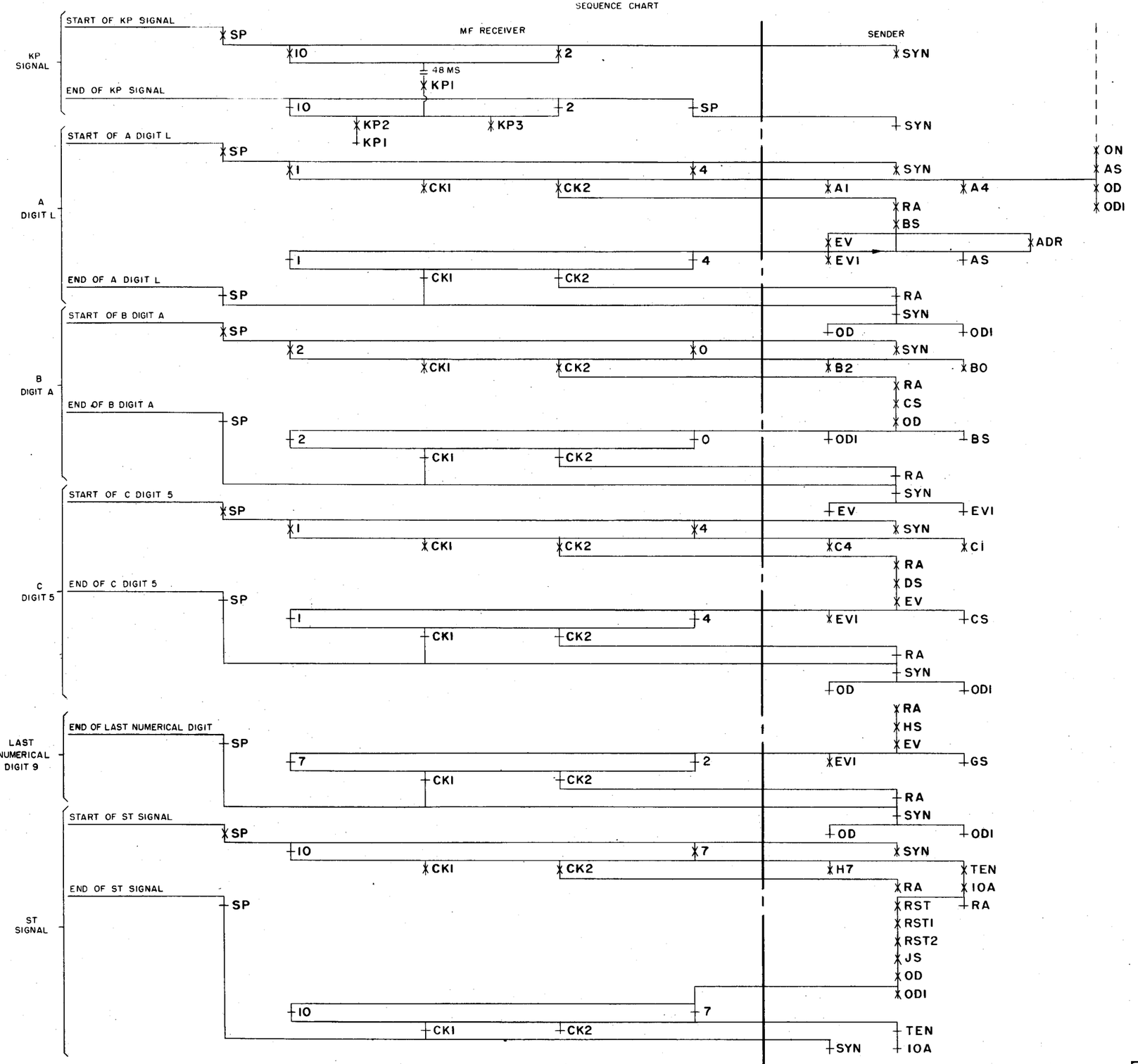

TABLE A
STEERING CIRCUIT PROGRESS

DIGIT	RA	EV	OD	AS	BS	CS	DS	ES	FS	GS	HS	JS	KS	LS	MX
KP			H+H	H+H											
A	O R	O H	H R	R	O H										
B	O R	R	O H		R	O H									
C	O R	O H	R			R	O H								
D	O R	R	O H				R	O H							
E	O R	O H	R					R	O H						
F	O R	R	O H						R	O H					
G	O R	O H	R							R	O H				
H	O R	R	O H								R	O H			
J	O R	O H	R									R	O H		
K	O R	R	O H										R	O H	
L	O R	O H	R											R	O H
START	O R	H H	O H												H H

O DENOTES RELAY OPERATED
H DENOTES RELAY HELD
R DENOTES RELAY RELEASE
\+ DENOTES INITIALLY OPERATED AT SEIZURE FROM OFF-NORMAL GROUND

TABLE B

CODES	CHANNEL NO. 8 FREQUENCY					
	(0) 700~	(1) 900~	(2) 1100~	(4) 1300~	(7) 1500~	(10) 1700~
KP			X			X
1	X	X				
2	X		X			
3		X	X			
4	X			X		
5		X		X		
6			X	X		
7	X				X	
8		X			X	
9			X		X	
0				X	X	
ST					X	X

MF INCOMING SENDER
REGISTRATION
WITH
RECEIVING CKT. SD-95087

NO. 4A TOLL

3 SHEETS, SHEET 3

OS 135-1

BELL TELEPHONE LABORATORIES, INC.
PRINTED IN U. S. A.
ORDER AS BSP ITEM MP- 11722