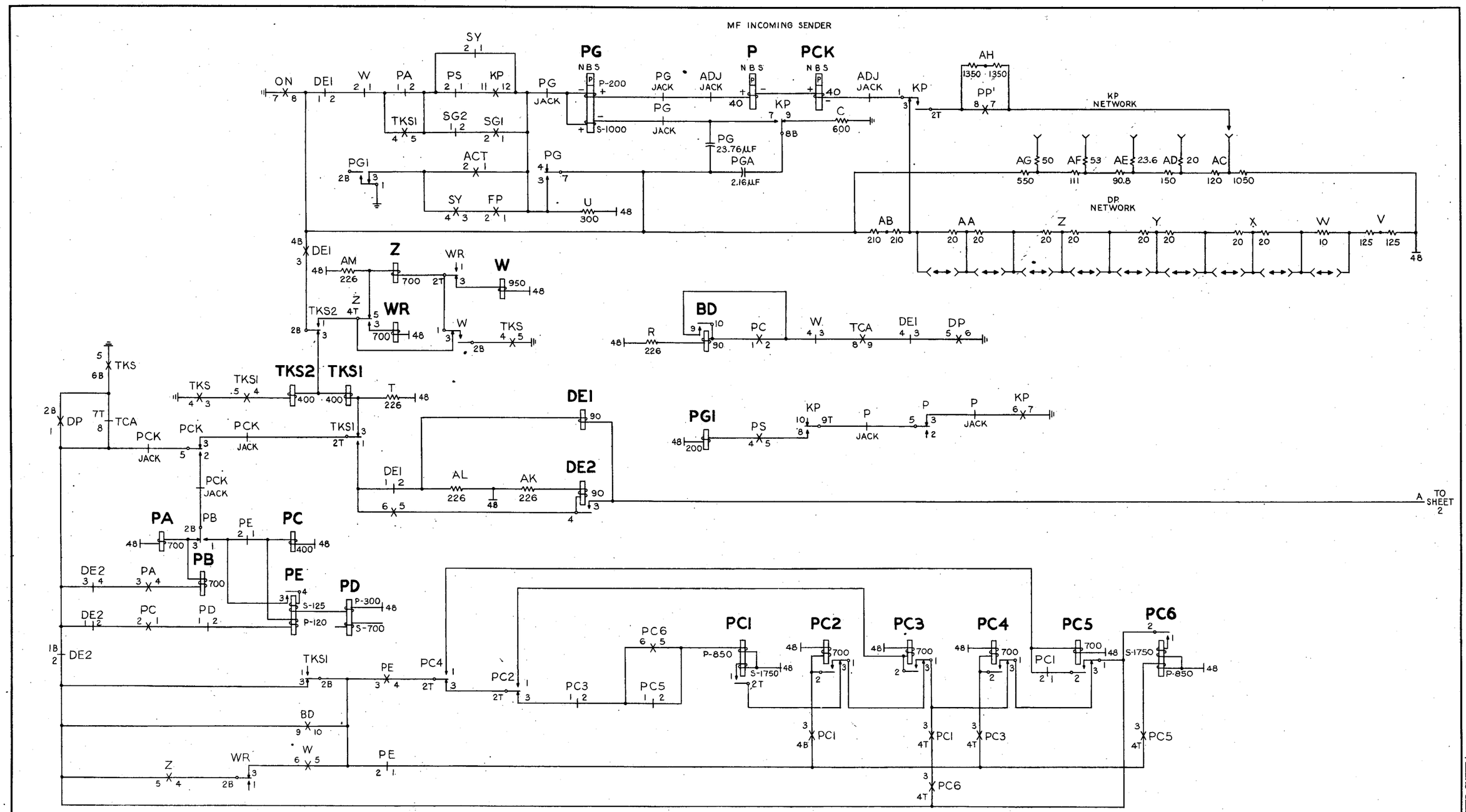

MF INCOMING SENDER

PULSE GENERATION AND RECAPTURE

OS 137-1

2 SHEETS, SHEET 1

NO. 4A TOLL

ORDER AS BSP ITEM MP-11728

ISSUE.	1	2
DATE	11-28-51	8-19-55

2 SHEETS, SHEET 1

MP-11728

BELL TELEPHONE LABORATORIES, INC.

PRINTED IN U. S. A.

MP-11728

2 SHEETS, SHEET 2

ISSUE	DATE	
1	11-28-51	M.A.V.G. F.B.B.
2	8-19-53	G.S.D. R.E.C.

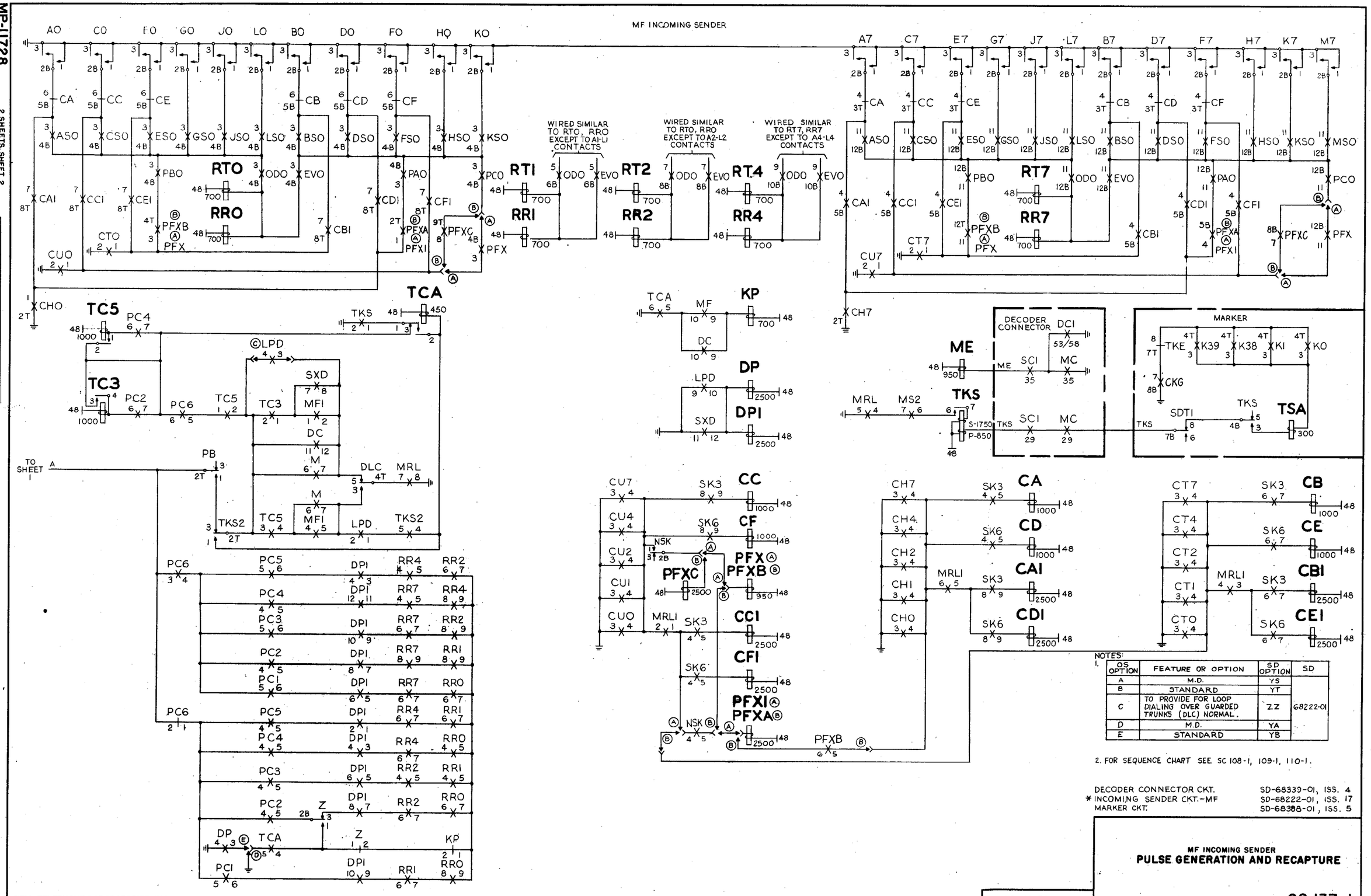

NOTES:

1.

OS OPTION	FEATURE OR OPTION	SD OPTION	SD
A	M.D.	YS	68222-01
B	STANDARD	YT	
C	TO PROVIDE FOR LOOP DIALING OVER GUARDED TRUNKS (DLC) NORMAL.	ZZ	
D	M.D.	YA	
E	STANDARD	YB	

2. FOR SEQUENCE CHART SEE SC 108-1, 109-1, 110-1.

DECODER CONNECTOR CKT. SD-68339-01, ISS. 4
* INCOMING SENDER CKT.-MF SD-68222-01, ISS. 17
MARKER CKT. SD-68388-01, ISS. 5

MF INCOMING SENDER
PULSE GENERATION AND RECAPTURE

NO. 4A TOLL

2 SHEETS, SHEET 2

OS 137-1

BELL TELEPHONE LABORATORIES, INC.
PRINTED IN U. S. A.
ORDER AS BSP ITEM MP-11728