MF INCOMING SENDER

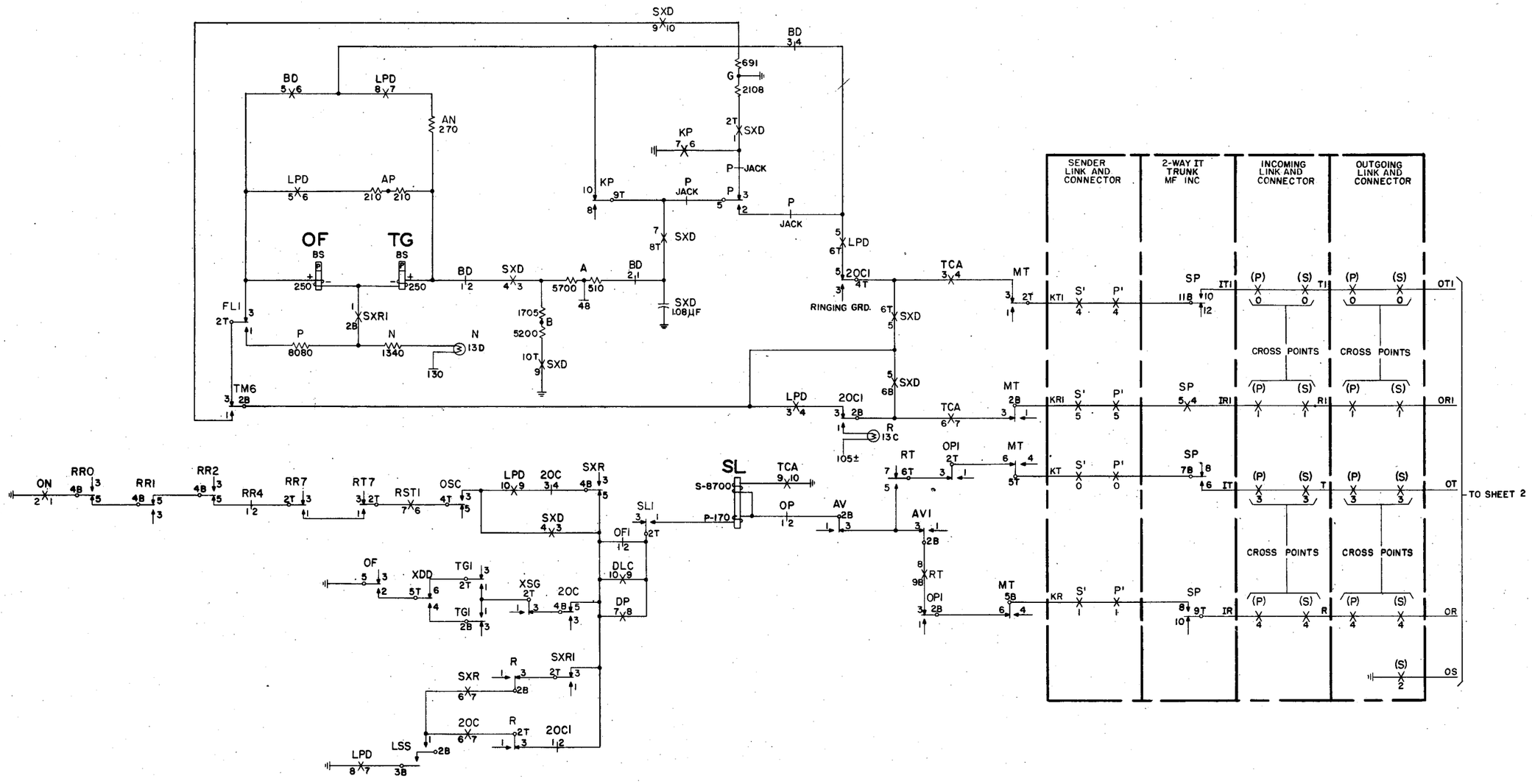

MF INCOMING SENDER
SL CHECK & SX AND LOOP OUTPULSING

OS 139-1 — 2 SHEETS, SHEET 1 — NO 4A TOLL

ORDER AS BSP ITEM MP-11729

ISSUE	DATE
1	11-19-57
2	8-13-63

2 SHEETS, SHEET 1

MP-11729

BELL TELEPHONE LABORATORIES, INC.

PRINTED IN U. S. A.

MP-11729 2 SHEETS, SHEET 2

DATE	ISSUE	
11-19-51	1	[illegible]
8-13-53	2	[illegible]

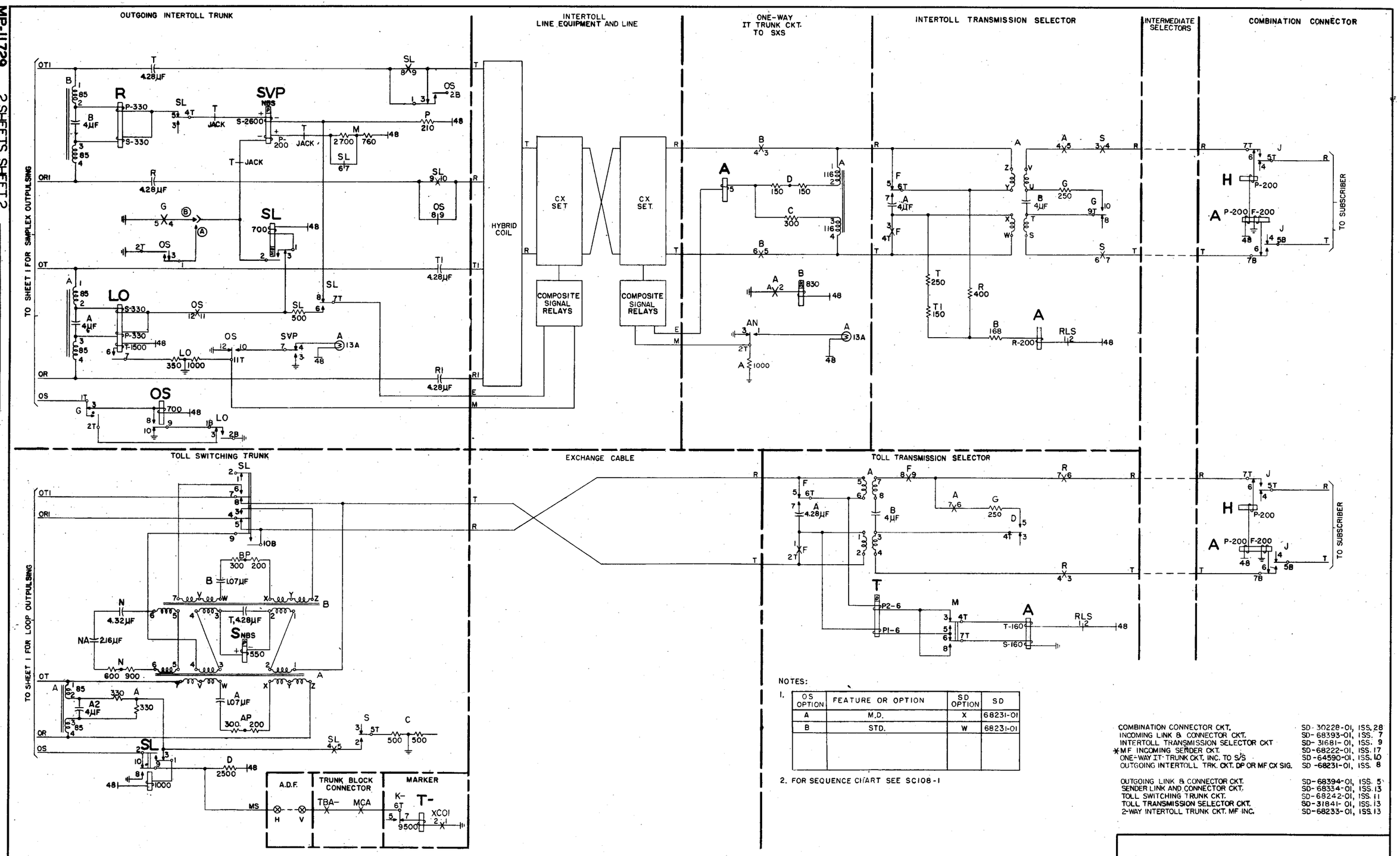

NOTES:

1.

OS OPTION	FEATURE OR OPTION	SD OPTION	SD
A	M.D.	X	68231-01
B	STD.	W	68231-01

2. FOR SEQUENCE CHART SEE SC108-1

COMBINATION CONNECTOR CKT.	SD-30228-01, ISS. 28
INCOMING LINK & CONNECTOR CKT.	SD-68393-01, ISS. 7
INTERTOLL TRANSMISSION SELECTOR CKT	SD-31681-01, ISS. 9
*MF INCOMING SENDER CKT.	SD-68222-01, ISS. 17
ONE-WAY IT-TRUNK CKT. INC. TO S/S	SD-64590-01, ISS. 10
OUTGOING INTERTOLL TRK. CKT. DP OR MF CX SIG.	SD-68231-01, ISS. 8
OUTGOING LINK & CONNECTOR CKT.	SD-68394-01, ISS. 5
SENDER LINK AND CONNECTOR CKT.	SD-68334-01, ISS. 13
TOLL SWITCHING TRUNK CKT.	SD-68242-01, ISS. 11
TOLL TRANSMISSION SELECTOR CKT.	SD-31841-01, ISS. 13
2-WAY INTERTOLL TRUNK CKT. MF INC.	SD-68233-01, ISS. 13

MF INCOMING SENDER

SL CHECK & SX AND LOOP OUTPULSING

NO. 4A TOLL

2 SHEETS, SHEET 2

OS 139-1

BELL TELEPHONE LABORATORIES, INC.
PRINTED IN U. S. A.
ORDER AS BSP ITEM MP-11729