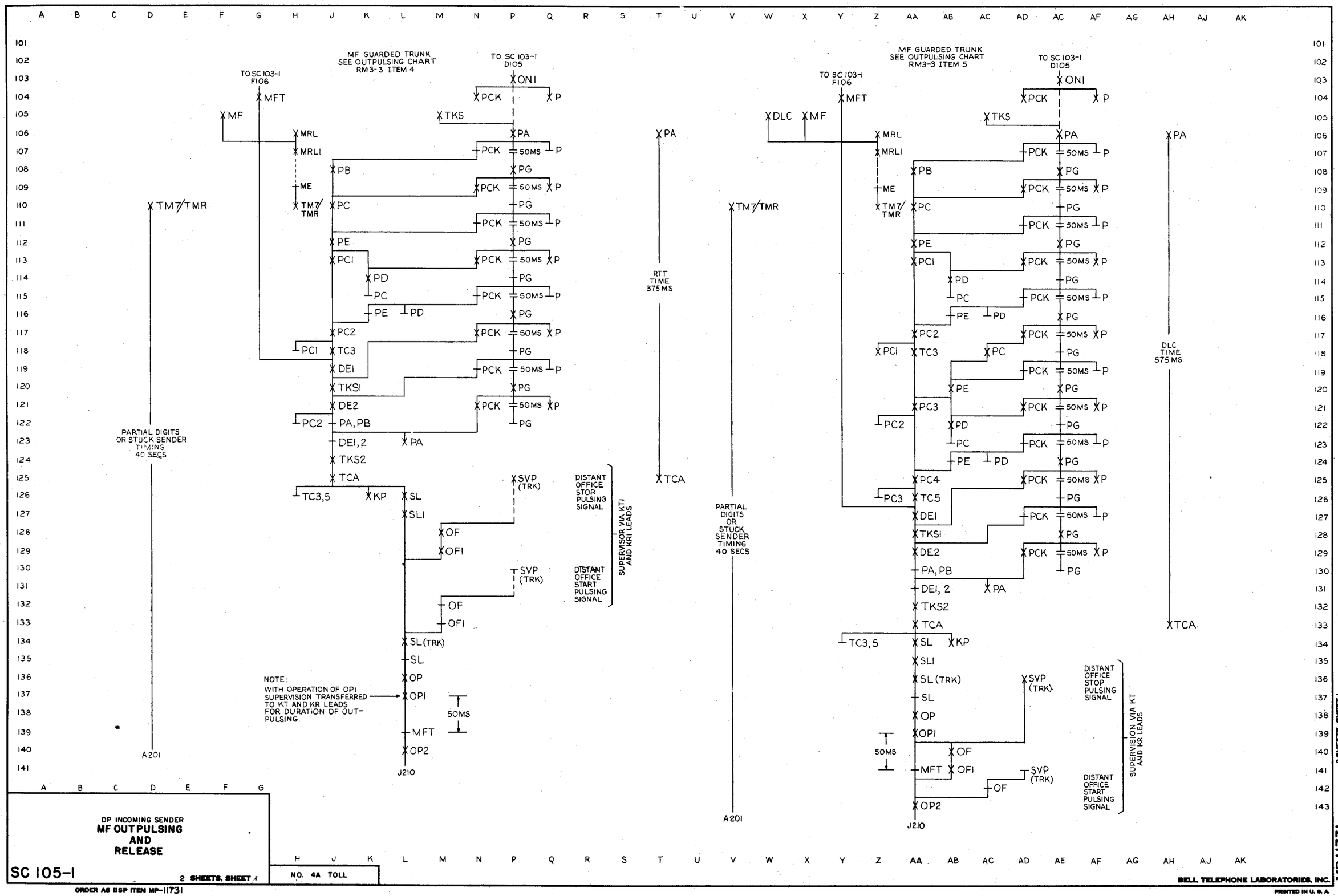

DP INCOMING SENDER
MF OUTPULSING AND RELEASE

SC 105-1

2 SHEETS, SHEET 1

NO. 4A TOLL

ORDER AS BSP ITEM MP-11731

BELL TELEPHONE LABORATORIES, INC.

PRINTED IN U. S. A.

MP-11731

ISSUE	1	R.S.M.	B	G.P.S.
DATE		11-28-51		8-14-53

DATE	ISSUE		
11-28-51	1	A.E.B.	
8-14-63	2	A.E.B.	

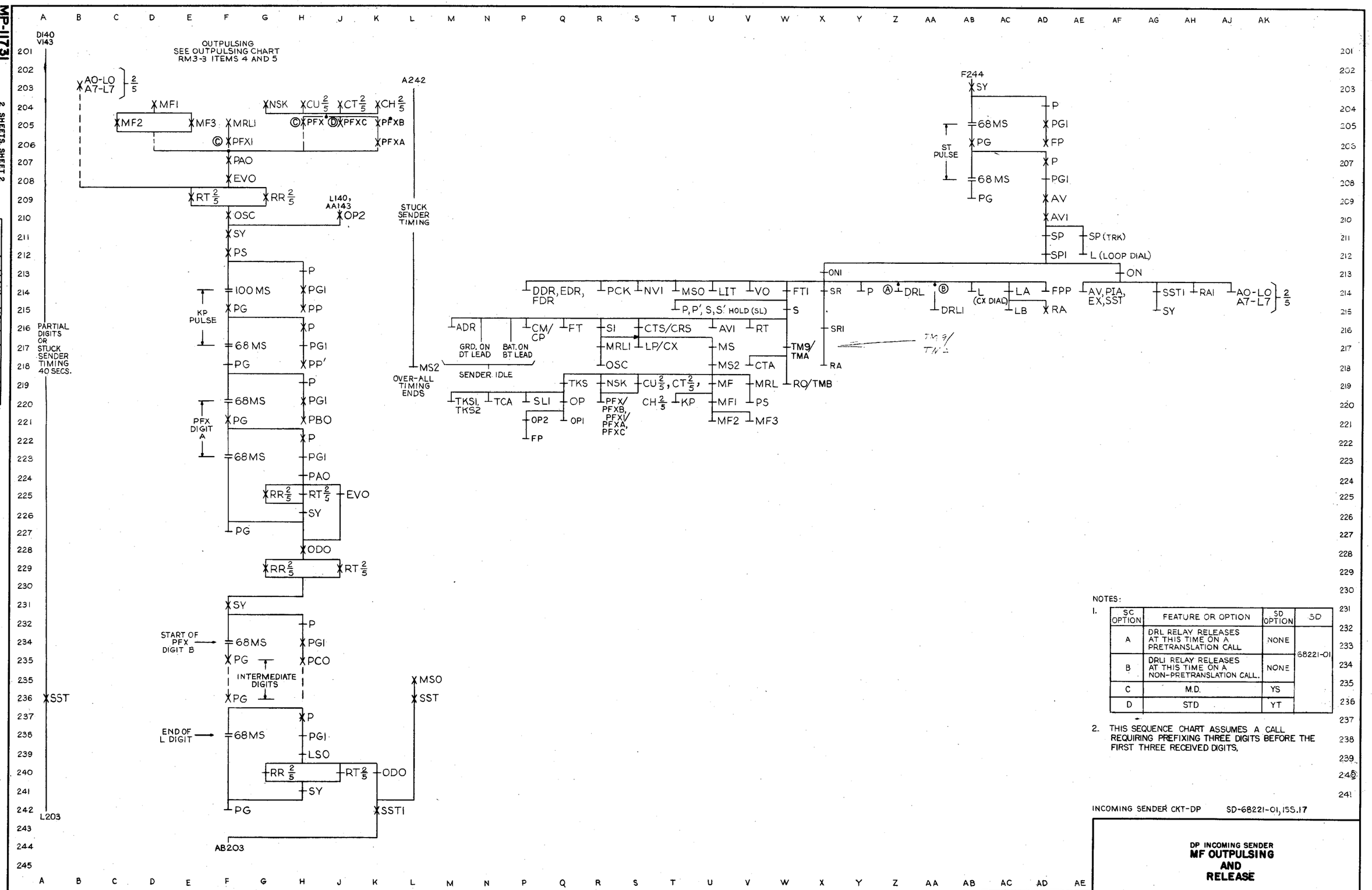

NOTES:

1.

SC OPTION	FEATURE OR OPTION	SD OPTION	SD
A	DRL RELAY RELEASES AT THIS TIME ON A PRETRANSLATION CALL	NONE	68221-01
B	DRLI RELAY RELEASES AT THIS TIME ON A NON-PRETRANSLATION CALL.	NONE	
C	M.D.	YS	
D	STD	YT	

2. THIS SEQUENCE CHART ASSUMES A CALL REQUIRING PREFIXING THREE DIGITS BEFORE THE FIRST THREE RECEIVED DIGITS.

INCOMING SENDER CKT-DP SD-68221-01, ISS.17

DP INCOMING SENDER
MF OUTPULSING AND RELEASE

NO. 4A TOLL

2 SHEETS, SHEET 2

SC 105-1