MP-11732

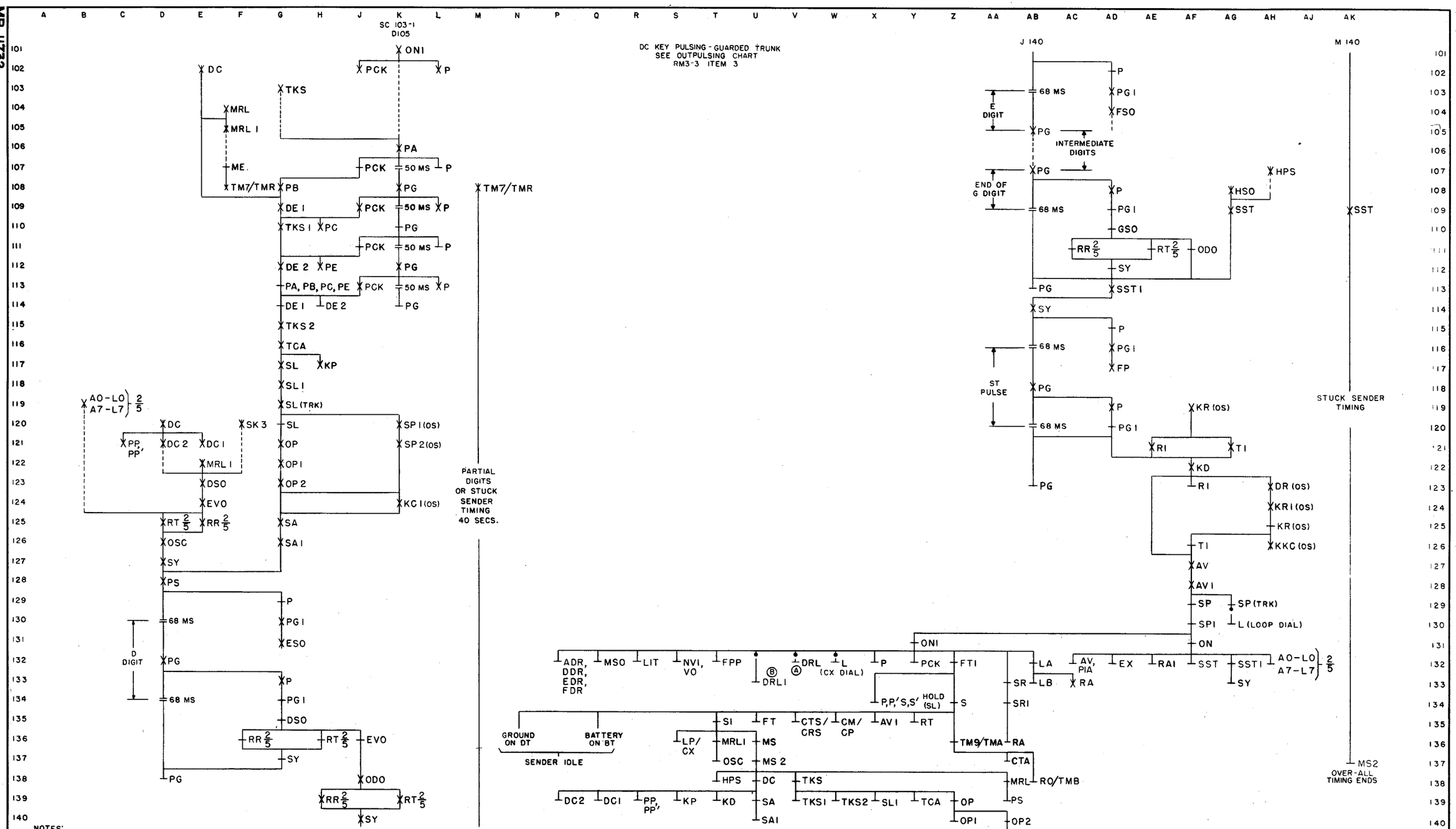

NOTES:

1.

SC OPTION	FEATURE OR OPTION	SD OPTION	SD
A	DRL RELAY RELEASES AT THIS TIME ON A PRETRANSLATION CALL	NONE	68221-01
B	DRL1 RELAY RELEASES AT THIS TIME ON A NON-PRETRANSLATION CALL	NONE	68221-01

INCOMING SENDER CKT. DP SD-68221-01, ISS. 17
OUTGOING SENDER CKT. SD-68018-01, ISS. 25

AF AG AH AJ AK

DP INCOMING SENDER
DC OUTPULSING AND RELEASE

SC 106-1

NO 4A TOLL

ISSUE	1	2
DATE	11-22-51	8-10-53

BELL TELEPHONE LABORATORIES, INC.

PRINTED IN U. S. A.

ORDER AS BSP ITEM MP-11732