MP-11735

ISSUE	DATE
1	11-26-69
2	8-19-75

DC KEY PULSING - GUARDED TRUNK
(SEE OUTPULSING CHART RM3-3 ITEM 3)

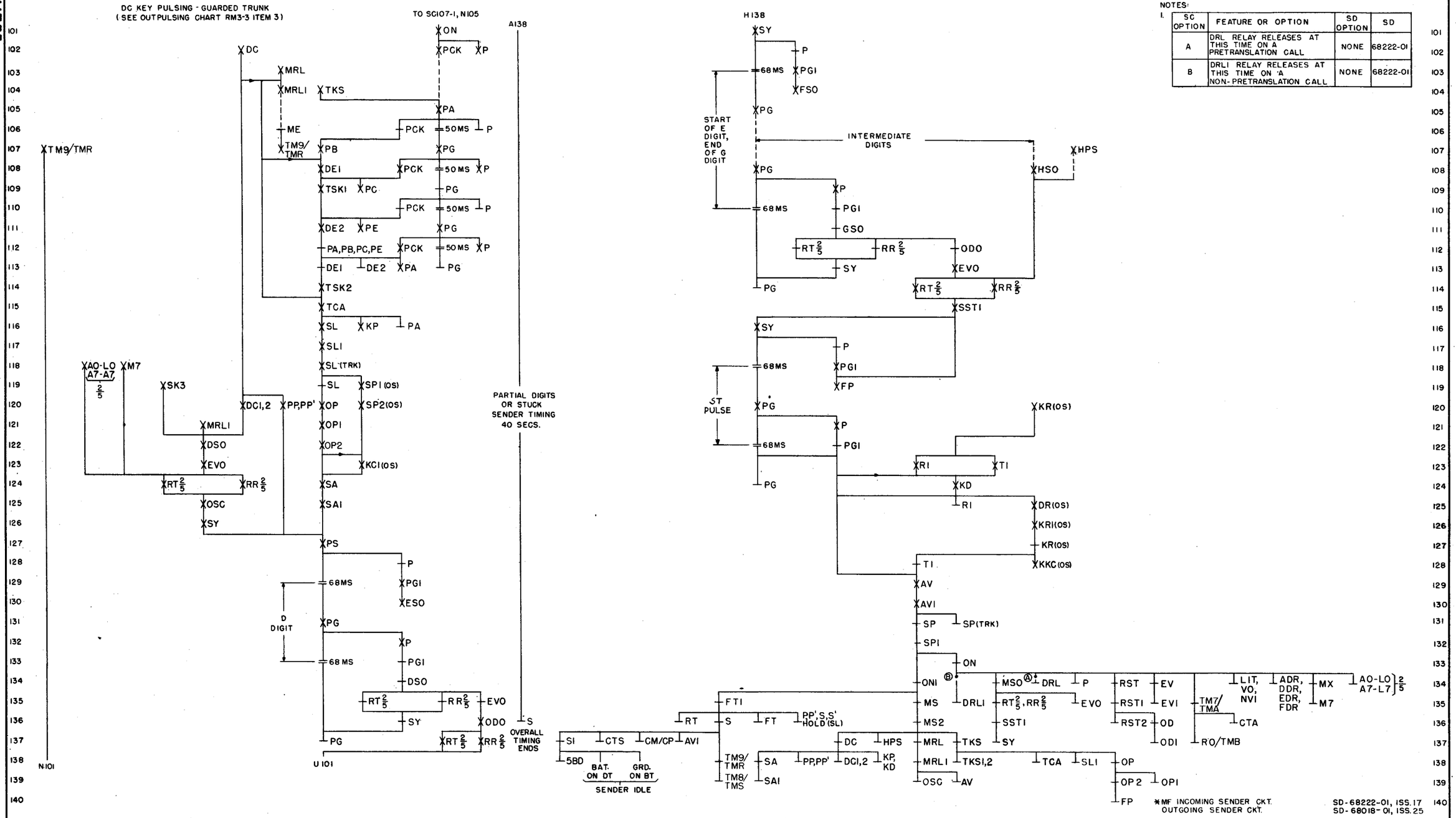

NOTES:
1.

SC OPTION	FEATURE OR OPTION	SD OPTION	SD
A	DRL RELAY RELEASES AT THIS TIME ON A PRETRANSLATION CALL	NONE	68222-01
B	DRL1 RELAY RELEASES AT THIS TIME ON A NON-PRETRANSLATION CALL	NONE	68222-01

*MF INCOMING SENDER CKT.
OUTGOING SENDER CKT.

SD-68222-01, ISS. 17
SD-68018-01, ISS. 25

MF INCOMING SENDER

DC OUTPULSING AND RELEASE

NO. 4A TOLL

SC110-1

BELL TELEPHONE LABORATORIES, INC.
PRINTED IN U. S. A.
ORDER AS BSP ITEM MP-11735