NOTES:

1.

OS OPTION	FEATURE OR OPTION	SD OPTION	SD
A	LAST RELAY IN FINAL ROUTE TRUNK GROUPS	Z	68420-01
B	LAST RELAY IN NON-FINAL ROUTE (HIGH USAGE) TRUNK GROUPS	W	68420-01

2. NUMBERS IN PARENTHESIS FOR R-RELAYS INDICATE THE ARBITRARILY ASSIGNED GROUND SUPPLY ASSOCIATED WITH EACH R-RELAY.

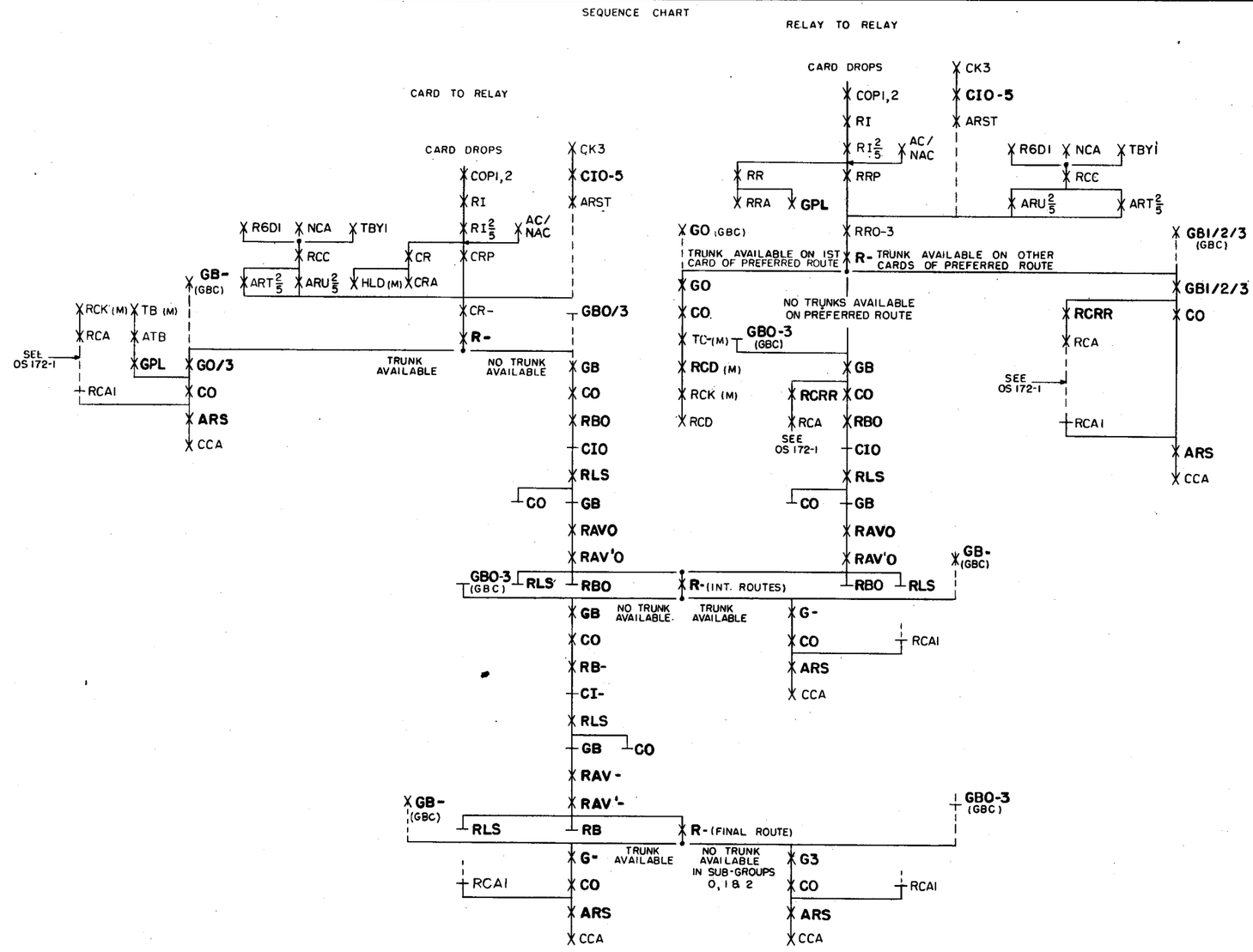

ALTERNATE ROUTE TRAFFIC CONTROL CKT. SD-68408-01, ISS. 2
*DECODER CKT. SD-68340-01, ISS. 8
GROUP CHAIN RELAY CKT. SD-68420-01, ISS. 4
TRUNK BLOCK CONNECTOR CKT. SD-68027-01, ISS. 19

DECODER
ROUTE RELAY TREE AND GROUND SUPPLIES

OS 173-1 2 SHEETS, SHEET 1

NO. 4A TOLL

ORDER AS BSP ITEM MP-11757

BELL TELEPHONE LABORATORIES, INC.

PRINTED IN U. S. A.

MP-11757 2 SHEETS, SHEET 1

ISSUE	2	M.J.N. K.E.C.
DATE	8-5-53	

MP-11757

2 SHEETS, SHEET 2
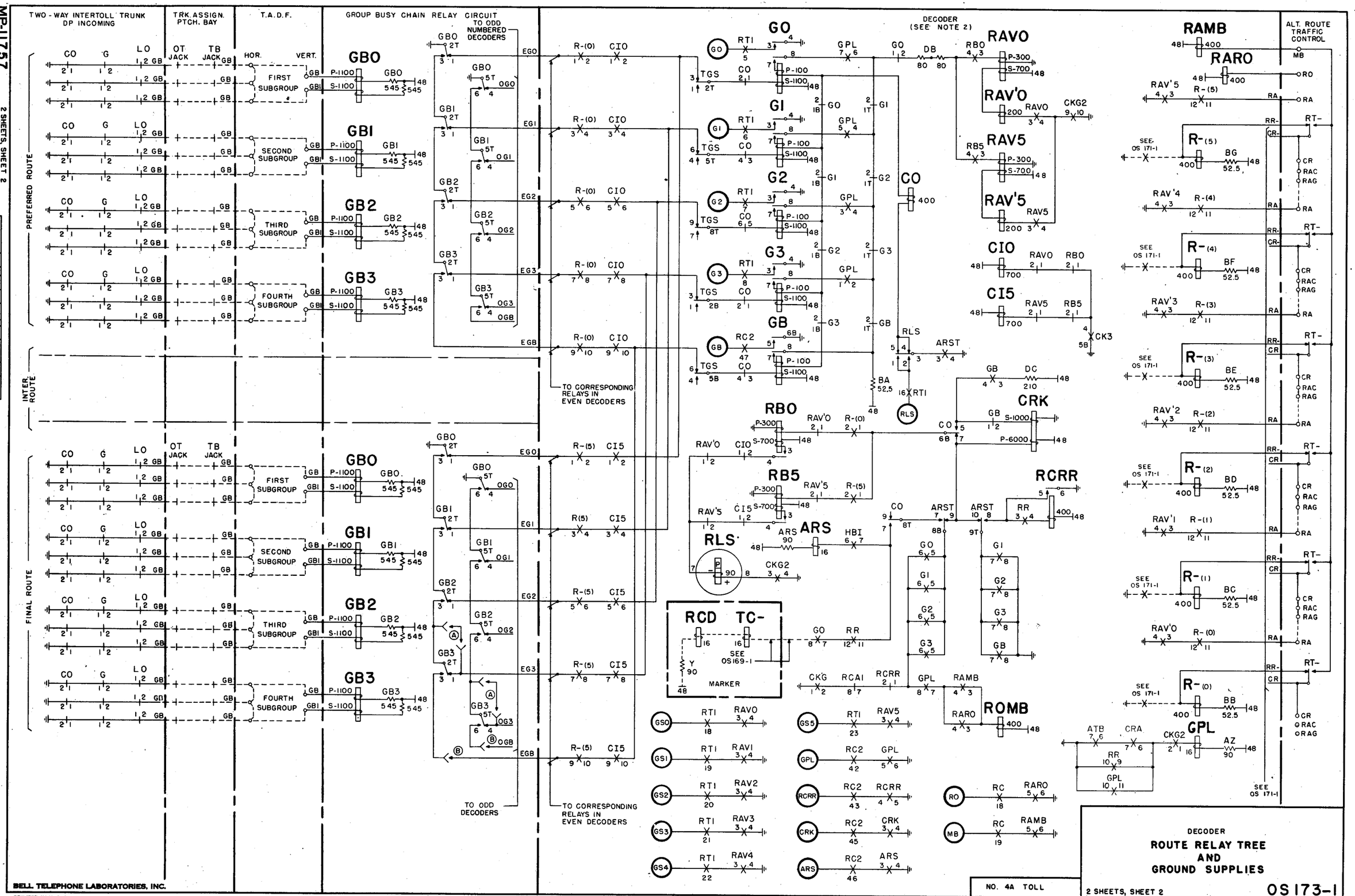
ISSUE	DATE	
1	12-14-51	K.S.K. E.B.B.
2	8-3-53	H.H.N. R.F.C.