MP-11760

ISSUE	1	1	
DATE	1-3-52		

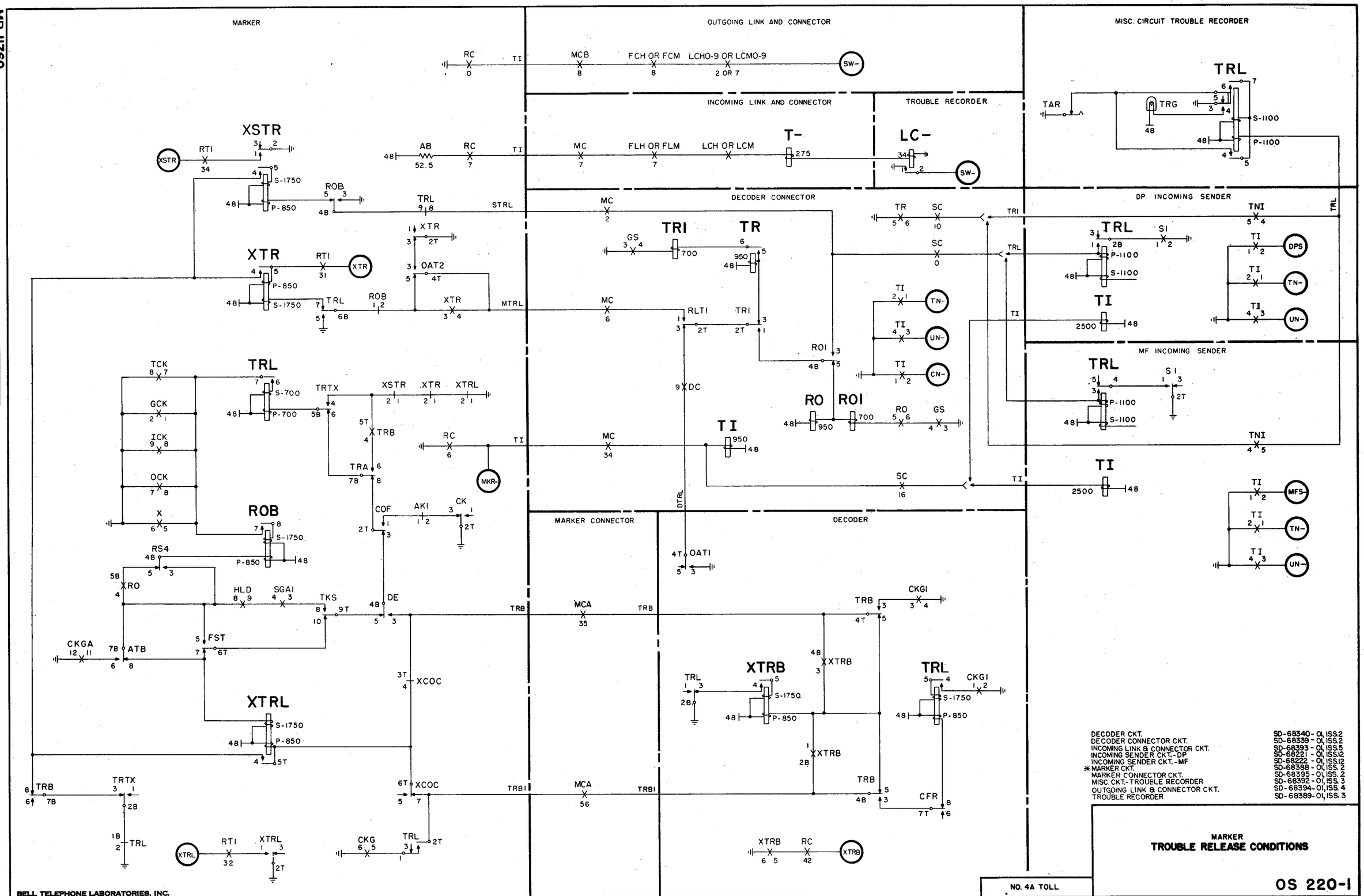

DECODER CKT. SD-68340-01, ISS.2
DECODER CONNECTOR CKT. SD-68339-01, ISS.2
INCOMING LINK & CONNECTOR CKT. SD-68393-01, ISS.5
INCOMING SENDER CKT.-DP SD-68221-01, ISS.12
INCOMING SENDER CKT.-MF SD-68222-01, ISS.12
* MARKER CKT. SD-68388-01, ISS. 2
MARKER CONNECTOR CKT. SD-68395-01, ISS. 2
MISC. CKT.-TROUBLE RECORDER SD-68392-01, ISS. 3
OUTGOING LINK & CONNECTOR CKT. SD-68394-01, ISS. 4
TROUBLE RECORDER SD-68389-01, ISS. 3

MARKER
TROUBLE RELEASE CONDITIONS

OS 220-1

ORDER AS BSP ITEM MP-11760