NOTES:
1.

OS OPTION	FEATURE OR OPTION	SD OPTION	SD
A	LOAD CONTROL TIMING NOT PROVIDED	FIG.G	68222-01
B	LOAD CONTROL TIMING PROVIDED	FIG.H	
C	MFR.DISC.	YQ	
D	STD.	YR	
E	TRAFFIC USAGE RECORDER PROVIDED	YX	
F	TRAFFIC USAGE RECORDER NOT PROVIDED	FIG.L	
G	LOAD CONTROL TIMING PROVIDED WITH TRAFFIC USAGE RECORDER	FIG.M	

SEQUENCE CHART

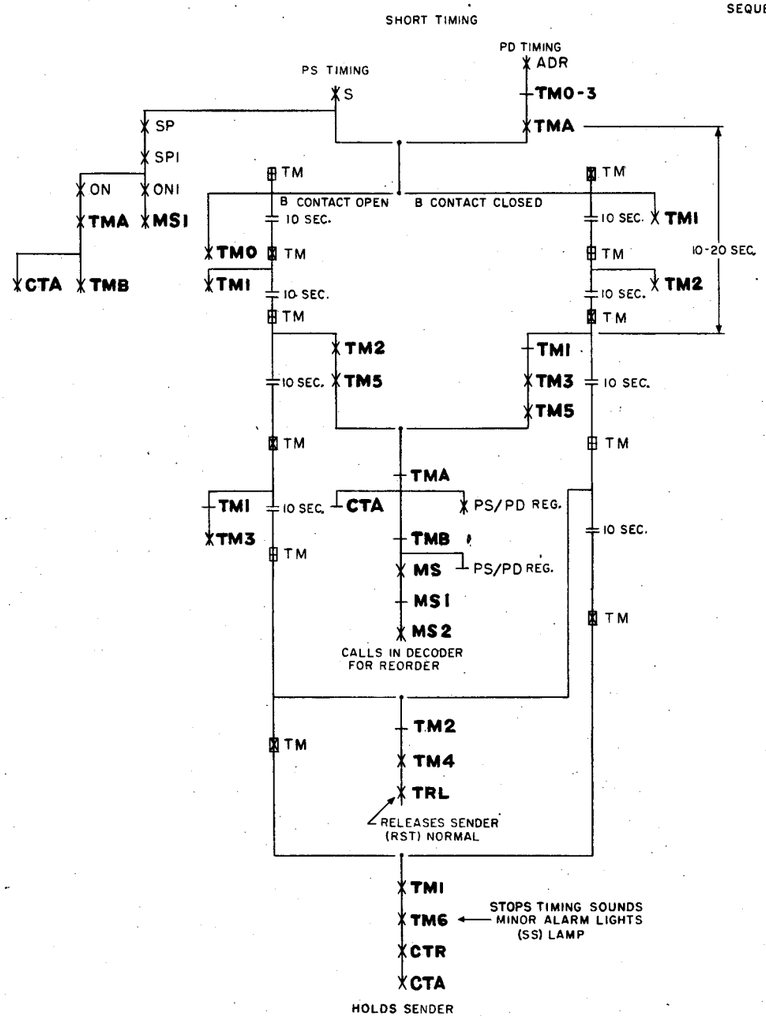

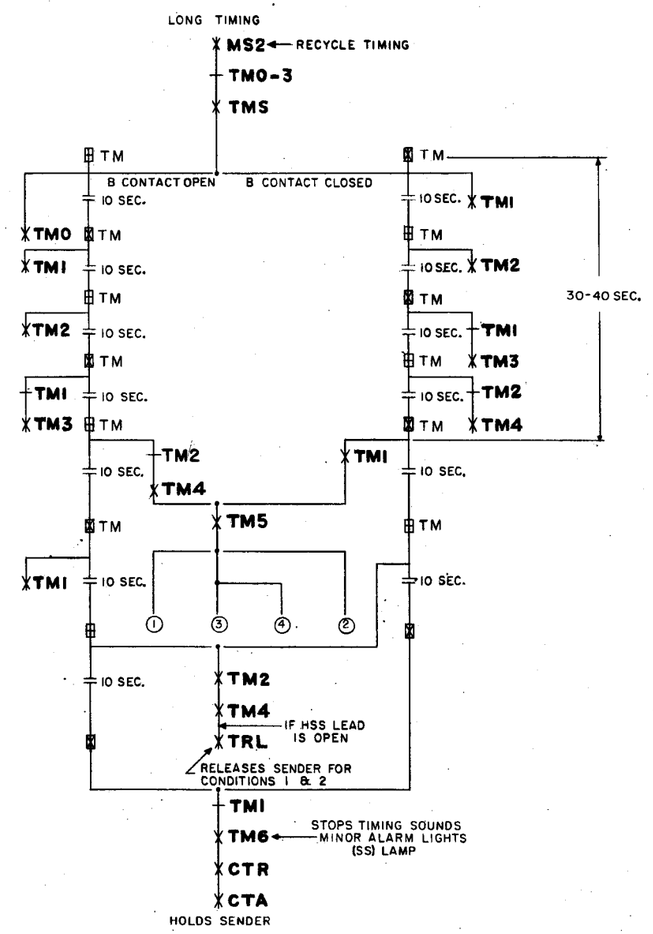

1. START SIGNAL NOT RECEIVED OR OPERATORS ERROR.

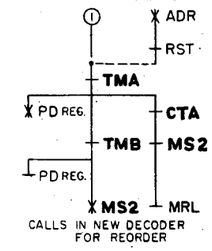

2. REORDER ON "SS" TIMEOUT.

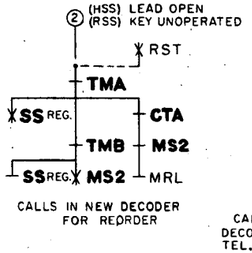

3. "SS" TIMEOUT-"HSS" LEAD OPEN.

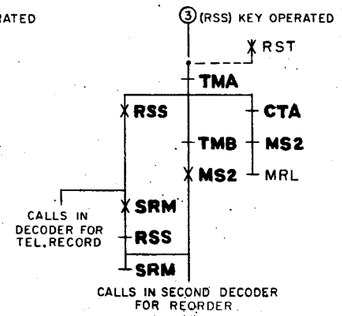

4. "SS" TIMEOUT-BATTERY ON "HSS" LEAD.

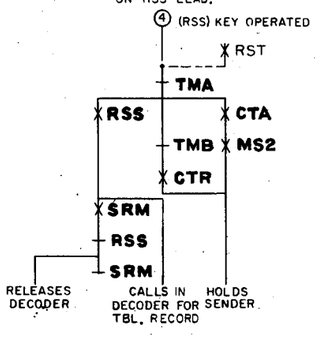

DECODER CKT.	SD-68340-01, ISS.5
DECODER CONN.CKT.	SD-68339-01, ISS.4
INCOMING SENDER CKT, -MF	SD-68222-01, ISS.17
INTERRUPTER FRAME	SD-68058-01, ISS.15
MARKER CKT.	SD-68398-01, ISS.5
MARKER CONN.CKT.	SD-68395-01, ISS.5
MISC.CKT.FOR SENDER MAKE BUSY FRAME	SD-68386-01, ISS.15
MISC.CKT.FOR TROUBLE RECORDER	SD-68392-01, ISS.5
TRAFFIC REGISTER CKT.	SD-68412-01, ISS.7

MF INCOMING SENDER OVER-ALL TIMING, HOLDING AND RECORDING OF STUCK SENDERS FIG.20

OS 144-2 2 SHEETS, SHEET 1- NO. 4A TOLL

ORDER AS BSP ITEM MP-11797

ISSUE	1
DATE	11-7-58

2 SHEETS, SHEET 1

MP-11797

BELL TELEPHONE LABORATORIES, INC.
PRINTED IN U. S. A.

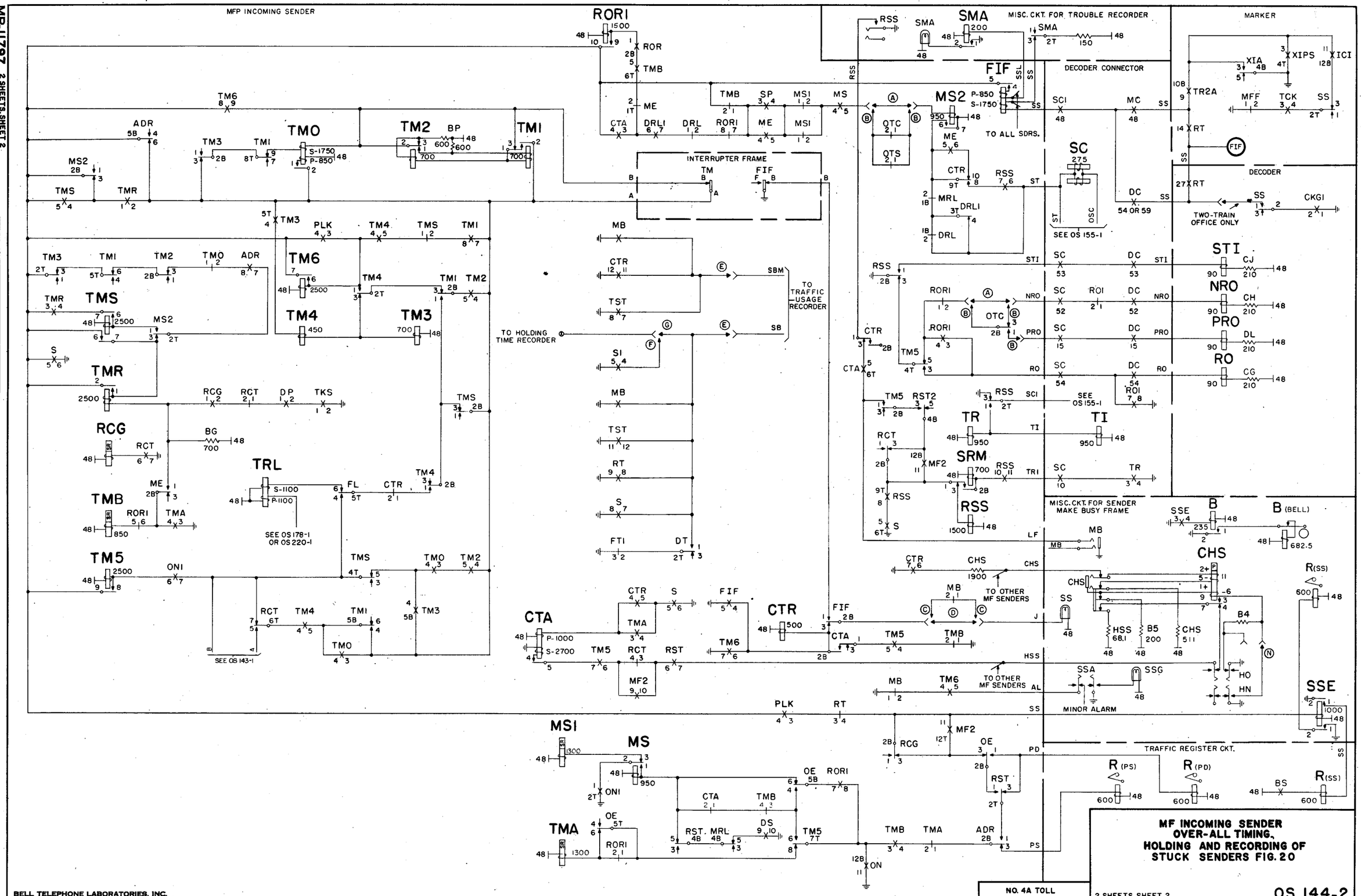

MF INCOMING SENDER OVER-ALL TIMING, HOLDING AND RECORDING OF STUCK SENDERS FIG. 20

2 SHEETS, SHEET 2

OS 144-2

MP-11797 2 SHEETS, SHEET 2

ISSUE	1	R.S.S. R.E.C.
DATE	11-7-53	

BELL TELEPHONE LABORATORIES, INC.

PRINTED IN U. S. A.

ORDER AS BSP ITEM MP-11797