Return to Menu

BCM200/400 4.0 Installation and Maintenance Guide

BCM 4.0

Business Communications Manager

Document Status: **Standard**

Document Version: **02**

Part Code: **N0060612**

Date: **June 2006**

NORTEL

Copyright © 2006 Nortel Networks, All Rights Reserved

All rights reserved.

The information in this document is subject to change without notice. The statements, configurations, technical data, and recommendations in this document are believed to be accurate and reliable, but are presented without express or implied warranty. Users must take full responsibility for their applications of any products specified in this document. The information in this document is proprietary to Nortel Networks.

Trademarks

Nortel, the Nortel logo, and the Globemark are trademarks of Nortel Networks.

Microsoft, MS, MS-DOS, Windows, and Windows NT are trademarks of Microsoft Corporation.

All other trademarks and registered trademarks are the property of their respective owners.

SOFTWARE LICENSE

NORTEL NETWORKS INC. (“NORTEL NETWORKS”) TELECOMMUNICATION PRODUCTS

THIS LEGAL DOCUMENT IS A LICENSE AGREEMENT ("License") BETWEEN YOU, THE END-USER ("CUSTOMER") AND NORTEL NETWORKS. PLEASE READ THIS LICENSE CAREFULLY BEFORE USING THE SOFTWARE. BY USING THIS SOFTWARE, YOU, THE CUSTOMER, ARE AGREEING TO BE BOUND BY THE TERMS OF THIS LICENSE. IF YOU DO NOT AGREE TO THE TERMS OF THIS LICENSE, RETURN THE UNUSED SOFTWARE AND THE ASSOCIATED DOCUMENTATION TO NORTEL NETWORKS THROUGH A NORTEL NETWORKS AUTHORIZED DISTRIBUTOR WITHIN FIVE (5) DAYS OF YOUR ACQUISITION OF THE SOFTWARE FOR A REFUND.

Subject to the terms hereinafter set forth, NORTEL NETWORKS grants to CUSTOMER and/or its representatives, with a "need to know," a personal, non-exclusive license (1) to use the licensed software, proprietary to NORTEL NETWORKS or its suppliers and (2) to use the associated documentation. CUSTOMER is granted no title or ownership rights, in or to the licensed software, in whole or in part, and CUSTOMER acknowledges that title to and all copyrights, patents, trade secrets and/or any other intellectual property rights to and in all such licensed software and associated documentation are and shall remain the property of NORTEL NETWORKS and/or NORTEL NETWORKS’ suppliers. The right to use licensed software may be restricted by a measure of usage of applications based upon number of lines, number of ports, number of terminal numbers assigned, number of users, or some similar measure. Expansion beyond the specified usage level may require payment of an incremental charge or another license fee.

NORTEL NETWORKS considers the licensed software to contain "trade secrets" of NORTEL NETWORKS and/or its suppliers. Such "trade secrets" include, without limitation thereto, the specific design, structure and logic of individual licensed software programs, their interactions with other portions of licensed software, both internal and external, and the programming techniques employed therein. In order to maintain the "trade secret" status of the information contained within the licensed software, the licensed software is being delivered to CUSTOMER in object code form only.

NORTEL NETWORKS or any of its suppliers holding any intellectual property rights in any licensed software, and/or any third party owning any intellectual property rights in software from which the licensed software was derived, are intended third party beneficiaries of the License. All grants of rights to use intellectual property intended to be accomplished by this License are explicitly stated. No other grants of such rights shall be inferred or shall arise by implication.

CUSTOMER warrants to NORTEL NETWORKS that CUSTOMER is not purchasing the rights granted by this License in anticipation of reselling those rights.

CUSTOMER shall:

- Hold the licensed software in confidence for the benefit of NORTEL NETWORKS and/or NORTEL NETWORKS’ suppliers using no less a degree of care than it uses to protect its own most confidential and valuable information; and
- Keep a current record of the location of each copy of licensed software made by it; and
- Install and use each copy of licensed software only on a single CPU at a time (for this purpose, single CPU shall include systems with redundant processing units); and
- Affix to each copy of licensed software made by it, in the same form and location, a reproduction of the copyright notices, trademarks, and all other proprietary legends and/or logos of NORTEL NETWORKS and/or NORTEL NETWORKS’ suppliers, appearing on the original copy of such licensed software delivered to CUSTOMER; and retain the same without alteration on all original copies; and
- Issue instructions to each of its authorized employees, agents and/or representatives to whom licensed software is disclosed, advising them of the confidential nature of such licensed software and to provide them with a summary of the requirements of this License; and
- Return the licensed software and all copies through an Authorized Distributor to NORTEL NETWORKS at such time as the CUSTOMER chooses to permanently cease using it.

CUSTOMER shall not:

- Use licensed software (i) for any purpose other than CUSTOMER’s own internal business purposes and (ii) other than as provided by this License; or
- Allow anyone other than CUSTOMER’s employees, agents and/or representatives with a "need to know" to have physical access to licensed software; or
- Make any copies of licensed software except such limited number of object code copies in machine readable form only, as may be reasonably necessary for execution or archival purposes only; or
- Make any modifications, enhancements, adaptations, or translations to or of licensed software, except as may result from those CUSTOMER interactions with the licensed software associated with normal use and explained in the associated documentation; or
- Attempt to reverse engineer, disassemble, reverse translate, decompile, or in any other manner decode licensed software, in order to derive the source code form or for any other reason; or
- Make full or partial copies of any documentation or other similar printed or machine-readable matter provided with licensed software unless the same has been supplied in a form by NORTEL NETWORKS intended for periodic reproduction of partial copies; or
- Export or re-export licensed software and/or associated documentation by downloading or otherwise from the fifty states of the United States and the District of Columbia.

PLEASE REFER TO THE NEXT PAGE

Except for Java Product (as defined herein below), CUSTOMER may assign collectively its rights under this License to any subsequent owner of the associated hardware, but not otherwise, subject to the payment of the then current license fee for new users, if any. No such assignment shall be valid until CUSOMTER (1) has delegated all of its obligations under this License to the assignee; and (2) has obtained from the assignee an unconditional written assumption of all such obligations; and (3) has provided NORTEL NETWORKS a copy of such assignment, delegation and assumption; and (4) has transferred physical possession of all licensed software and all associated documentation to the assignee and destroyed all archival copies. Except as provided, neither this License nor any rights acquired by CUSTOMER through this License are assignable. Any attempted assignment of rights and/or transfer of licensed software not specifically allowed shall be void and conclusively presumed a material breach of this License.

If NORTEL NETWORKS (i) claims a material breach of this License, and (ii) provides written notice of such claimed material breach to CUSTOMER and (iii) observes that such claimed material breach remains uncorrected and/or unmitigated more than thirty (30) days following CUSTOMER's receipt of written notice specifying in reasonable detail the nature of the claimed material breach, then CUSTOMER acknowledges that this License may be immediately terminated by NORTEL NETWORKS and CUSTOMER further acknowledges that any such termination shall be without prejudice to any other rights and remedies that NORTEL NETWORKS may have at law or in equity.

EXPRESS LIMITED WARRANTIES FOR ANY ITEM OF LICENSED SOFTWARE, IF ANY, WILL BE SOLELY THOSE GRANTED DIRECTLY TO CUSTOMER BY DISTRIBUTOR. OTHER THAN AS SET FORTH THEREIN, THIS LICENSE DOES NOT CONFER ANY WARRANTY TO CUSTOMER FROM OR BY NORTEL NETWORKS.

THE LICENSED SOFTWARE IS PROVIDED BY NORTEL NETWORKS "AS IS" AND WITHOUT WARRANTY OF ANY KIND OR NATURE, WRITTEN OR ORAL, EXPRESS OR IMPLIED, INCLUDING (WITHOUT LIMITATION) THE IMPLIED WARRANTIES OF MERCHANTABILITY AND OF FITNESS FOR A PARTICULAR PURPOSE.

THIS LIMITATION OF WARRNATIES WAS A MATERIAL FACTOR IN THE ESTABLISHMENT OF THE LICENSE FEE CHARGED FOR EACH SPECIFIC ITEM OF SOFTWARE LICENSED.

IN NO EVENT WILL NORTEL NETWORKS AND/OR NORTEL NETWORKS' SUPPLIERS AND THEIR DIRECTORS, OFFICERS, EMPLOYEES OR AGENTS BE LIABLE TO OR THROUGH CUSTOMER FOR INCIDENTAL, INDIRECT, SPECIAL, CONSEQUENTIAL, PUNITIVE, OR EXEMPLARY DAMAGES OF ANY KIND, INCLUDING LOST PROFITS, LOSS OF BUSINESS OR BUSINESS INFORMATION, BUSINESS INTERRUPTION, OR OTHER ECONOMIC DAMAGE, AND FURTHER INCLUDING INJURY TO PROPERTY, AS A RESULT OF USE OR INABILITY TO USE THE LICENSED SOFTWARE OR BREACH OF ANY WARRANTY OR OTHER TERM OF THIS LICENSE, REGARDLESS OF WHETHER NORTEL NETWORKS AND/OR NORTEL NETWORKS' SUPPLIERS WERE ADVISED, HAD OTHER REASON TO KNOW, OR IN FACT KNEW OF THE POSSIBILITY THEREOF.

Restricted Rights. Use, duplication or disclosure by the United States government is subject to the restrictions as set forth in the Right in Technical Data and Computer Software Clauses in DFARS 252.227-7013(c) (1) (ii) and FAR 52.227-19(c) (2) as applicable.

The rights and obligations arising under this License shall be construed in accordance with the laws of the State of Tennessee. If for any reason a court of competent jurisdiction finds any provision of this License or portion thereof to be unenforceable, that provision of the License shall be enforced to the maximum extent permissible so as to effect the intent of the parties and the remainder of this License shall continue in full force and effect.

This License constitutes the entire agreement between the parties with respect to the use of the licensed software and the associated documentation, and supersedes all prior or contemporaneous understandings or agreements, written or oral, regarding such subject matter. No amendment to or modification of this License will be binding unless in writing and signed by a duly authorized representative of NORTEL NETWORKS.

Task List

Installing the BCM main unit 93
To attach the rack-mount brackets 95
To mount the main unit in an equipment rack 96
To install the main unit on the wall 98
To install the BCM main unit on a table or shelf 101

Installing an expansion unit 103
To connect the expansion unit to the main unit 106

Installing a media bay module (MBM) 107
To select trunk MBMs 108
To select station MBMs 110
To determine bus requirements 115
To determine MBM DIP switch settings 118
To set MBM DIP switches 122

Connecting the cables 139
To connect power and wiring 140
To check system power and status 141
To connect DTM, CTM, CTM8, BRIM S/T, or 4x16 MBMs 144
To connect the GATM 145
To connect the DSM16+, DSM32+, ASM8, GASM8, or 4x16 MBMs 147
To connect the fiber cables 150
To connect the BCM system to the WAN 159
To connect the modem 159

Installing telephones and peripherals 163
To install the emergency telephone 167

Installing the analog terminal adapter 169
To connect the ATA2 171
To mount the ATA2 on a wall 172
To measure the insertion loss from the CO to the analog device 173
To measure the insertion loss from the analog device to the CO 173

Installing optional telephony equipment 175
To install an auxiliary ringer 175
To install an external paging system 176
To connect an external music source 178

Initializing the system 179
To connect the Ethernet crossover cable 180
To configure your computer 181
To display the configuration menus 182

Using Telset Administration to set the basic parameters 189
To enter the keycodes 190

To configure the IP address 190
To configure the modem....191
To select the region 191
To select the telephony startup template and start DN 192
To initialize voice mail....192
To create Telset user accounts 192

Using Element Manager to set the basic parameters 195
To access the BCM web page....196
To download and install BCM Element Manager 196
To connect to the BCM system 197
To enter a keycode....197
To configure the LAN IP address 198
To configure the modem....198
To configure the startup template for telephony services 199
To initialize voice mail....199
To enter a name for your system....200
To configure the date and time settings 200
To configure DHCP server settings 201
To configure IP Phones 202
To configure SNMP settings....203
To configure SNMP community strings 204
To configure the SNMP manager list....204
To create user accounts 205

Using the Startup Profile to configure parameters 207
To download the Startup Profile template 208
To customize a Startup Profile for your system 209
To load the Startup Profile data onto the BCM system 210

Completing the initial installation (optional) 213
To configure the MBM 214

System monitoring and troubleshooting 217
To monitor hard disk status 221
To determine RAID status 222
To access disk mirroring....224
To monitor RAID disk mirror operational status....226
To access the RAID status report....227
To monitor disk mirroring....228
To troubleshoot the emergency telephone on the system....228
To troubleshoot the emergency telephone connected to a CTM....229
To troubleshoot the ATA2....229
To check the ATA 2 wiring....229
To check for dial tone at the ATA 2 229
To check for trunk line dial tone to the ATA 2....230

Preparing hardware for maintenance or upgrades 231
To shut down the system software 233
To shutdown the system hardware 234
To restore the system to operation....234
To remove the base function tray 237

To install the base function tray 238
To remove the base function tray bezel 239
To install the base function tray bezel 240
To remove the advanced function tray 243
To remove the main unit top cover 247
To install the main unit top cover 248

Replacing a media bay module 251
To install an MBM 254

Replacing the hard disk 255
To install a RAID system 256
To replace a RAID configuration hard disk 258
To remove a hard disk cage from a BCM200 main unit 260
To remove a hard disk cage from a BCM400 main unit 261
To install a hard disk cage 263
To install a hard disk cage 264
To remove a hard disk from a standard configuration hard disk cage 267
To remove a primary hard disk from a RAID hard disk cage 268
To remove a mirror hard disk from a RAID hard disk cage 269
To install a hard disk into a standard configuration hard disk cage 270
To install a primary hard disk into a RAID hard disk cage 271
To install a mirror hard disk into a RAID hard disk cage 273
To initialize the hard disk in a single disk configuration 274

Replacing or upgrading a power supply 277
To remove the BCM200 power supply 278
To install a BCM200 standard power supply 280
To remove a BCM400 standard power supply 285
To install a BCM400 standard power supply 286
To remove the PSU status connector jumper 290
To install a redundant power supply cage (BCM400 only) 291
To remove a BCM400 redundant power supply cage 295
To install a power supply module 297
To remove a power supply module 299

Replacing data cards and processing hardware 301
To remove the WAN card 303
To install a replacement WAN card 305
To remove the media services card (MSC) 306
To install the media services card (MSC) 308
To remove the modem card 309
To install a modem card 311
To remove the processor expansion card (PEC) 315
To install a PEC 317
To remove a DIMM card 319
To install a DIMM card 320
To remove the clock/calendar battery 321
To install a new clock/calendar battery 323

Replacing or installing a cooling fan 325
To remove a BCM400 cooling fan 326

To install a BCM400 cooling fan 328
To remove a BCM200 cooling fan 331
To install a BCM200 cooling fan 333
To remove an expansion unit fan 334
To install an expansion unit fan 336

Contents

Regulatory information 19
North American regulatory information 19
Canadian Notice 19
Federal Communications Commission (FCC) Notice 20
Ringer Equivalence Number (REN) 20
EMI/EMC (FCC Part 15) 20
Important safety instructions 21
Safety 22
Enhanced 911 configuration 23
Radio-frequency interference 23
Telecommunication registration 23
International regulatory information 24
Safety 25
Additional safety information 25
ITU standardization compliance 26

Chapter 1
Getting started 27
About this guide 27
Audience 27
Acronyms 27
Symbols and conventions used in this guide 29
Related publications 31
How to get help 32

Chapter 2
Introducing the BCM hardware. 33
Main units 33
BCM200 main unit 34
BCM400 main unit 36
BCM400 advanced function tray 39
BCM400 advanced function tray RAID status LEDs 40
Base function tray component hardware 41
Base function tray faceplate components 41
Base function tray internal components 42
Main card 45
Data networking components 48
I/O interface card 50
BCM expansion unit (BCM400 only) 51

MBM bays and backplane 52
Media bay modules (MBMs) 53
Trunk media bay modules (MBMs) 55
Station media bay modules (MBMs) 58
Specialized media bay modules (MBMs) 63
BCM400 expansion gateway 64
BCM components 65
BCM power supply 65
BCM400 redundant power supply 66
Power supply adapter cord (international users) 68
Uninterruptable power supply 68
Hard disk 68
RAID upgrade kit 69
Cooling fan 70
Field replaceable units (FRU) 71
Telephones and adapters 74

Chapter 3
Viewing the BCM system LEDs 79

Base function tray system status display LEDs 79
Media bay module LEDs 81
DTM LEDs 82
BRIM LEDs 84

Chapter 4
Installation overview 85

Chapter 5
Checking the installation prerequisites 89

General requirements 89
Environmental requirements 89
Electrical requirements 90
Site telephony wiring requirements 90
Digital loop 90
Analog loop 91
System equipment, supplies, and tools 91
Basic hardware 91
Optional equipment 91
Other hardware and tools 92

Chapter 6
Installing the BCM main unit 93

Unpacking the main unit 94

Installing the main unit in an equipment rack 94
Installing the main unit on the wall 98
Installing the main unit on a flat surface 100
Next step 101

Chapter 7
Installing an expansion unit 103

Unpacking the expansion unit 104
Installing the expansion unit 104
Connecting the BCM expansion unit to the BCM main unit 105

Chapter 8
Installing a media bay module (MBM) 107

Selecting MBMs for your BCM system 107
Selecting trunk MBMs 108
Selecting station MBMs 110
Selecting a fiber expansion module (FEM) 111
Determining system capacity 111
Understanding DS30 numbers 111
Setting offsets 112
Determining bus requirements 113
Assigning DS30 resources 116
Choosing the assigned order for MBMs 117
Determining MBM DIP switch settings 118
Setting MBM DIP switches 122
Assigning line and extension numbers 123
DTM switch settings 123
DDIM switch settings 124
BRI switch settings 125
CTM switch settings 125
GATM switch settings 127
4x16 switch settings 128
ASM 8 and GASM8 switch settings 130
DSM switch settings 132
FEM switch settings 135
BCM400 expansion gateway MBMs 136
Installing an MBM 137
To install an MBM in the BCM main unit or expansion unit 138

Chapter 9
Connecting the cables. 139

Connecting power to the BCM system 140
Checking system power and status 141

Wiring the MBMs 142
Connect the MBMs to service providers 144
Wiring MBMs to internal connections 146
Wiring the FEM 150
Setting DNs and port numbers 151
MBM combinations 152
Combining CTMs/GATMs and 4x16s 153
Fully-loaded setup 153
DECT combinations 155
Changing configurations 156
System setup 157
Connecting the data networking hardware 157
Connecting the cards 158
Installing the cards 161

Chapter 10
Installing telephones and peripherals 163

System telephones 163
Analog terminal adapter 2 163
Central Answering Position (CAP/eCAP) 164
Telephone port and DN cross-reference 164
Installing an emergency telephone 167
Installing IP Phones 167
Installing the mobility systems 167
Installing T7406 cordless systems 167
Moving telephones 168

Chapter 11
Installing the analog terminal adapter 169

Configuration overview 169
Analog telephone 169
Analog data device 170
Installing the ATA2 170
Connecting the ATA2 170
Mounting the ATA2 171
Test insertion loss measurement 172
Configuring the ATA2 174

Chapter 12
Installing optional telephony equipment 175

Installing an auxiliary ringer 175
Activating auxiliary ringer programming 176
Connecting the external paging system 176

Connecting an external music source 177
Music-on-hold specifications 177
Next step 178

Chapter 13
Initializing the system 179

Data parameter requirements 179
Using the default BCM system IP address 179
Using the Ethernet crossover cable 180
Setting the crossover connections 180
Connecting through Ethernet crossover cable 180
Connecting through the serial port 181
Null modem cable setup 182
Software keycode 184
Regenerating a keycode after system replacement 184
Next step 184

Chapter 14
Configuring the BCM system 185

Initial parameters overview 186
Startup parameters overview 187

Chapter 15
Using Telset Administration to set the basic parameters 189

Configuring the initial parameters 190
Next step 193

Chapter 16
Using Element Manager to set the basic parameters. 195

Prerequisites 196
Accessing the BCM system 196
Configuring the initial parameters 197
Configuring the startup parameters 200
Next step 205

Chapter 17
Using the Startup Profile to configure parameters. 207

Startup Profile requirements 208
Configuring basic parameters 209
Startup Profile times and LED sequence 211
Next step 211

Chapter 18
Completing the initial installation (optional) 213

Configuring the media bay module 214
Configuring modem settings 215
Checking for software updates 215
Configuring voice mail 215
Customizing security policies 215
Performing a backup 216

Chapter 19
System monitoring and troubleshooting 217

System status display LEDs 218
Monitoring media bay module LEDs 219
Monitoring standard configuration hard disk status using Element Manager . . . 220
Monitoring the RAID LEDs 221
RAID disk mirroring 223
Monitoring or configuring disk mirror settings using Element Manager 224
Accessing disk mirroring through Element Manager 224
Monitoring RAID disk mirror operational status using Element Manager 226
Accessing the RAID status report using Element Manager 227
Monitoring disk mirroring using Element Manager 227
BCM system does not function 228
Emergency telephone does not function 228
ATA2 does not function 229

Chapter 20
Preparing hardware for maintenance or upgrades 231

Precautions 231
Special tools 233
Performing a system shutdown 233
Restarting the system after maintenance 234
Base function tray maintenance procedures 235
Removing the base function tray 236
Advanced function tray maintenance procedures 241
To remove the advanced function tray 243
To install the advanced function tray 245
Removing and installing the main unit top cover 246
Removing the main unit top cover 246
Installing the main unit top cover 248
Using the backup and restore utility 250

Chapter 21
Replacing a media bay module. 251

Removing an MBM 252
To remove an MBM 252
Installing an MBM 254
Returning the system to operation 254

Chapter 22
Replacing the hard disk. 255

Installing a RAID system 256
Replacing a RAID configuration hard disk 258
Removing a hard disk cage 259
Removing a hard disk cage from a BCM200 main unit 259
Removing a hard disk cage from a BCM400 advanced function tray 261
Installing a hard disk cage 262
Installing a hard disk cage in a BCM200 main unit 263
Installing a hard disk cage in a BCM400 main unit 264
Replacing a hard disk in the hard disk cage 266
Removing a hard disk from a standard configuration hard disk cage 266
Removing a primary hard disk from a RAID hard disk cage 267
Removing a mirror hard disk from a RAID hard disk cage 268
Installing a hard disk into a standard configuration hard disk cage 269
Installing a primary hard disk into a RAID hard disk cage 270
Installing a mirror hard disk into a RAID hard disk cage 272
Initializing the hard disk in a single-disk configuration 274
Initializing the hard disk in a RAID configuration 275

Chapter 23
Replacing or upgrading a power supply 277

Replacing a standard power supply 277
Removing a BCM200 power supply 278
Installing a BCM200 standard power supply 280
Removing a BCM400 standard power supply 284
Installing a BCM400 standard power supply 286
Upgrading to a redundant power supply 288
Removing the PSU status connector jumper 289
Installing a redundant power supply cage (BCM400 only) 290
Removing a BCM400 redundant power supply cage 295
Installing a power supply module 297
Removing a power supply module 299

Chapter 24
Replacing data cards and processing hardware 301

Replacing cards 301
Installing the WAN card 304
Installing the modem card 311
Replacing the processor expansion card (PEC) 313
Installing a processor expansion card (PEC) 316
Replacing memory 317
Increasing the amount of memory 318
Removing the dual in-line memory module (DIMM) card 318
Replacing the clock/calendar battery 320

Chapter 25
Replacing or installing a cooling fan 325

Replacing a cooling fan 325
Removing a BCM400 cooling fan 326
Installing a BCM400 cooling fan 328
Removing a BCM200 cooling fan 331
Installing the BCM200 cooling fan 333
Removing an expansion unit fan 334
Installing an expansion unit fan 336
Troubleshooting cooling fans 336

Appendix A
DTM wiring chart 337

Appendix B
BRIM wiring chart. 339

Appendix C
GATM wiring chart 341

Appendix D
4x16 wiring charts 345

Appendix E
DSM16 and DSM32 wiring charts 349

Appendix F
ASM8, ASM8+, and GASM8 wiring chart 351

Appendix G
Market profile attributes 353

Media bay module availability 353
FEM MBM–Norstar trunk cartridge combinations 354

Time zones and language information 355
Time and date format based on language 355
Language support for South America and Central America 356
Caller ID display formats 357
Core parameters for market profiles 357
Global analog trunk parameters 370
GASM8 parameters 373
ISDN line services 376
Analog and digital trunk types 377

Index 379

Regulatory information

Refer to the following sections for regulatory information on the BCM system:

- "North American regulatory information"
- "International regulatory information" on page 24

North American regulatory information

This Class A device complies with Part 68 & Part 15 of the FCC Rules and ICES-003 Class A Canadian EMI requirements. Operation is subject to the following two conditions (1) This device may not cause harmful interference and (2) this device must accept any interference received, including interference that may cause undesired operation.

Repairs to certified equipment should be coordinated by a representative designated by the supplier. Any repairs or alterations made by the user to this equipment, or equipment malfunctions, may give the telecommunications company cause to request the user to disconnect the equipment. Users should ensure for their own protection that the electrical ground connections of the power utility, telephone lines and internal metallic water pipe system, if present, are connected together. This precaution may be particularly important in rural areas.

Caution: Users should not attempt to make such connections themselves, but should contact the appropriate electric inspection authority, or electrician, as appropriate.

Do not attempt to repair this equipment. If you experience trouble, write for warranty and repair information:

USA	Canada
Nortel 640 Massman Drive Nashville, TN, USA 37210	Nortel Repair Service Centre 30 30 Norelco Drive Weston Ontario, Canada M9L 2X6

For warranty and repair service outside the USA or Canada, please contact your distributor.

Canadian Notice

The Industry Canada designation identifies certified equipment. This certification means that the equipment meets telecommunications network protective, operational and safety requirements as prescribed in the appropriate Terminal Equipment Technical Requirements document(s). The Department does not guarantee the equipment will operate to the user's satisfaction.

Federal Communications Commission (FCC) Notice

FCC registration number: This telephone equipment complies with Part 68, Rules and Regulations, of the FCC for connection to the Public Switched Telephone Network.

Your connection to the Public Switched Telephone Network must comply with these FCC rules:

- Before installing this equipment, users should ensure that it is permissible to be connected to the facilities of the local telecommunications company. The equipment must also be installed using an acceptable method of connection. The customer should be aware that compliance with the above conditions may not prevent degradation of service in some situations. See installation instructions for details.
- Use only an FCC Part 68-compliant Universal Service Order Code (USOC) network interface jack, as specified in the installation instructions, to connect to the Public Switched Telephone Network.
- If the equipment causes harm to the telephone network, the telephone company will notify you in advance that temporary discontinuance of the product may be required. But if advance notice isn't practical, the telephone company will notify you as soon as possible. You will also be advised of your right to file a complaint with the FCC, if you believe it is necessary.

Ringer Equivalence Number (REN)

The REN provides an indication of the maximum number of terminals allowed to be connected to a telephone interface. The termination on an interface may consist of any combination of devices subject only to the requirement that the sum of the RENs of all the devices does not exceed 5.

EMI/EMC (FCC Part 15)

This equipment has been tested and found to comply with the limits for a Class A digital device, pursuant to Part 15 of the FCC Rules. These limits are designed to provide reasonable protection against harmful interference in a residential installation. This equipment generates, uses and can radiate radio frequency energy and, if not installed and used in accordance with the instructions, may cause harmful interference to radio communications. However, there is no guarantee that interference will not occur in a particular installation. If this equipment does cause harmful interference to radio or television reception, which can be determined by turning the equipment off and on, the user is encouraged to try to correct the interference by one or more of the following measures:

- Reorient or relocate the receiving antenna.
- Increase the separation between the equipment and receiver.
- Connect the equipment into an outlet on a circuit different from that to which the receiver is connected.
- Consult the dealer or an experienced radio/TV technician for help.

Changes or modifications not expressly approved by the party responsible for compliance could void the user's authority to operate the equipment.

Important safety instructions

The following safety instructions cover the installation and use of the Product. Read carefully and retain for future reference.

Installation

Warning: To avoid electrical shock hazard to personnel or equipment damage observe the following precautions when installing telephone equipment:

- Never install telephone wiring during a lightning storm.
- Never install telephone jacks in wet locations unless the jack is specifically designed for wet locations.
- Never touch uninsulated telephone wires or terminals unless the telephone line has been disconnected at the network interface.

Use caution when installing or modifying telephone lines. The exclamation point within an equilateral triangle is intended to alert the user to the presence of important operating and maintenance (servicing) instructions in the literature accompanying the product.

Use

When using your telephone equipment, basic safety precautions should always be followed to reduce risk of fire, electric shock and injury to persons, including the following:

1. Read and understand all instructions.
2. Follow the instructions marked on the product.
3. Unplug this product (or host equipment) from the wall outlet before cleaning. Do not use liquid cleaners or aerosol cleaners. Use a damp cloth for cleaning.
4. Do not use this product near water, for example, near a bath tub, wash bowl, kitchen sink, or laundry tub, in a wet basement, or near a swimming pool.
5. Do not place this product on an unstable cart, stand or table. The product may fall, causing serious damage to the product.
6. This product should never be placed near or over a radiator or heat register. This product should not be placed in a built-in installation unless proper ventilation is provided.
7. Do not allow anything to rest on the power cord. Do not locate this product where the cord will be abused by persons walking on it.
8. Do not overload wall outlets and extension cords as this can result in the risk of fire or electric shock.
9. Never spill liquid of any kind on the product.
10. To reduce the risk of electric shock do not disassemble this product, but have it sent to a qualified service person when some service or repair work is required.

11 Unplug this product (or host equipment) from the wall outlet and refer servicing to qualified service personnel under the following conditions:

a When the power supply cord or plug is damaged or frayed.

b If the product has been exposed to rain, water or liquid has been spilled on the product, disconnect and allow the product to dry out to see if it still operates; but do not open up the product.

c If the product housing has been damaged.

d If the product exhibits a distinct change in performance.

Caution: To eliminate the possibility of accidental damage to cords, plugs, jacks, and the telephone, do not use sharp instruments during the assembly procedures.

Warning: Do not insert the plug at the free end of the handset cord directly into a wall or baseboard jack. Such misuse can result in unsafe sound levels or possible damage to the handset.

12 Save these instructions.

Use of a music source

In accordance with U.S. Copyright Law, a license may be required from the American Society of Composers, Authors and Publishers, or similar organization if Radio or TV broadcasts are transmitted through the music-on-hold or Background Music features of this telecommunication system.

Nortel hereby disclaims any liability arising out of the failure to obtain such a license.

Safety

Business Communications Manager (BCM) equipment meets all applicable requirements of both the CSA C22.2 No.60950 and UL 60950 Edition 3.

Danger: Risk of shock.
Read and follow installation instructions carefully.
Ensure the BCM system is not powered and that all telephone/data cables are removed prior to opening the BCM unit in the field.
If installation of additional hardware and /or servicing is required, disconnect all telephone cable connections prior to unplugging the BCM modules.
Ensure the BCM system is connected to a wall outlet with a third-wire protective earth connection prior to connecting any telecommunications cables to the BCM main unit or expansion units.

Caution: Only qualified persons should service the system.
The installation and service of this hardware is to be performed only by service personnel having appropriate training and experience necessary to be aware of hazards to which they are exposed in performing a task and of measures to minimize the danger to themselves or other persons.
Electrical shock hazards from the telecommunication network and AC mains are possible with this equipment. To minimize risk to service personnel and users, the BCM system must be connected to an outlet with a third-wire ground.
Service personnel must be alert to the possibility of high leakage currents becoming available on metal system surfaces during power line fault events near network lines. These leakage currents normally safely flow to Protective Earth ground through the power cord. Therefore, it is mandatory that connection to an earthed outlet is performed first and removed last when cabling to the unit. Specifically, operations requiring the unit to be powered down must have the network connections (central office lines) removed first.

Enhanced 911 configuration

Warning:
Local, state and federal requirements for Emergency 911 services support by Customer Premises Equipment vary. Consult your telecommunication service provider regarding compliance with applicable laws and regulations.

Radio-frequency interference

Warning: Equipment generates RF energy.
This equipment generates, uses, and can radiate radio-frequency energy. If not installed and used in accordance with the installation manual, it may cause interference to radio communications. It has been tested and found to comply with the limits for a Class A computing device pursuant to Part 15 of the FCC Rules and with ICES.003, CLASS A Canadian EMI Requirements. Operation of this equipment in a residential area is likely to cause interference, in which case the user, at his or her own expense, will be required to take whatever measures may be required to correct the interference.

Telecommunication registration

BCM equipment meets all applicable requirements of both Industry Canada CS-03 and US Federal Communications Commission (FCC) Part 68 and has been registered under files Industry Canada 332D-5980A and FCC US: AB6KF15B20705 (key system), US: AB6MF15B20706 (hybrid system), and US: AB6PF15B23740 (PBX system). Connection of the BCM telephone system to the nationwide telecommunications network is made through a standard network interface jack that you can order from your local telecommunications company. This type of customer-provided equipment cannot be used on party lines or coin lines.

Before installing this equipment, users should ensure that it is permissible to be connected to the facilities of the local telecommunications company. The equipment must also be installed using an acceptable method of connection. The customer should be aware that compliance with the above conditions may not prevent degradation of service in some situations.

Repairs to certified equipment should be made by an authorized maintenance facility designated by the supplier. Any repairs or alterations made by the user to this equipment, or equipment malfunctions, may give the telecommunications company cause to request the user to disconnect the equipment. Users should ensure for their own protection that the electrical ground connections of the power utility, telephone lines and internal metallic water pipe system, if present, are connected together. This precaution may be particularly important in rural areas.

Caution: Users should not attempt to make such connections themselves, but should contact the appropriate electric inspection authority, or electrician.

International regulatory information

CE	The CE Marking on this equipment indicates compliance with the following: This device conforms to Directive 1999/5/EC on Radio Equipment and Telecommunications Terminal Equipment as adopted by the European Parliament And Of The Council.	

This is a class A product. In a domestic environment this product may cause radio interference in which case the user may be required to take adequate measures.

Hereby, Nortel declares that BCM units, with Model No. NT9T61XX, NT9T62XX, NT9T64XX, and NT9T65XX, are in compliance with the essential requirements and other relevant provisions of Directive 1999/5/EC.

Information is subject to change without notice. Nortel reserves the right to make changes in design or components as progress in engineering and manufacturing may warrant. This equipment has been tested and found to comply with the European Safety requirements EN 60950 and EMC requirements EN 55022 (Class A) and EN 55024. These EMC limits are designed to provide reasonable protection against harmful interference when the equipment is operated in a commercial and light industrial environment.

Warning:

This is a class A product. In a domestic environment this product may cause radio interference in which case the user may be required to take adequate measures. The above warning is inserted for regulatory reasons. If any customer believes that they have an interference problem, either because their Nortel product seems to cause interference or suffers from interference, they should contact their distributor immediately. The distributor will assist with a remedy for any problems and, if necessary, will have full support from Nortel.

Safety

Warning:

Only qualified service personnel may install this equipment. The instructions in this manual are intended for use by qualified service personnel only.

Warning: Risk of shock.

Ensure the BCM is unplugged from the power socket and that any telephone or network cables are unplugged before opening the BCM main unit or expansion unit.

Read and follow installation instructions carefully

Warning: Only qualified persons should service the system.

The installation and service of this hardware is to be performed only by service personnel having appropriate training and experience necessary to be aware of hazards to which they are exposed in performing a task and of measures to minimize the danger to themselves or other persons.

Electrical shock hazards from the telecommunication network and AC mains are possible with this equipment. To minimize risk to service personnel and users, the BCM system must be connected to an outlet with a third-wire Earth.

Service personnel must be alert to the possibility of high leakage currents becoming available on metal system surfaces during power line fault events near network lines. These leakage currents normally safely flow to Protective Earth through the power cord. Therefore, it is mandatory that connection to an earthed outlet is performed first and removed last when cabling to the unit. Specifically, operations requiring the unit to be powered down must have the network connections (exchange lines) removed first.

Additional safety information

The following interfaces (TNV) can be connected to the Public Switched Telephone Network in accordance with Nortel and the local carriers installation requirements:

- BCM, CSC GATi Ports
- BCM, CSC ADSL Port option
- Expansion Unit, Digital Trunk Module (T1/E1/ISDN)
- Expansion Unit, Global Analog Trunk Module 4 and 8 Port (Loop Start)
- Expansion Unit, CTM4/8 (Loop Start)
- Expansion Unit, 4x16 (Loop Start)
- Expansion Unit, BRIM (ST configuration)

The following interfaces are designated as Safety Extra Low Voltage (SELV) and cannot be connected to unprotected plant wiring.

- BCM, CSC Page Port
- BCM, CSC Auxiliary Ringer Port
- BCM, CSC Music On-Hold Port.
- BCM, CSC Relay Port
- BCM, CSC USB Port
- BCM, CSC Ethernet Port including optional Ethernet Hub Ports

ITU standardization compliance

The following list provides voice/data applications and telephony support for BCM 4.0:

- G.711 and G.729AB codecs
- V.27ter, V.29, and V.17 data modem modulation supported (T.38 fax control gateway)
- G3 fax
- T512.1 (Type 1 Receiver DTMF)
- G.168
- H.323
- Q.931

Chapter 1
Getting started

About this guide

The *BCM200/400 4.0 Installation and Maintenance Guide* describes how to install, configure, and maintain the BCM200 and BCM400 hardware running Business Communications Manager (BCM) 4.0 software.

The concepts, operations, and tasks described in this guide relate to the hardware of the BCM system. This guide provides task-based information on how to install the hardware components and perform basic configuration tasks.

Use Element Manager, Startup Profile, and Telset Administration to configure various BCM parameters.

In brief, the information in this guide explains:

- Installing hardware components
- Starting and initializing the system hardware
- Replacing components
- Testing the system

Audience

The *BCM200/400 4.0 Installation and Maintenance Guide* is directed to installers responsible for installing, configuring, and maintaining BCM 4.0 systems.

To use this guide, you must:

- be an authorized BCM 4.0 installer or administrator within your organization
- know basic Nortel BCM terminology
- be knowledgeable about telephony and IP networking technology

Acronyms

The following is a list of acronyms used in this guide.

Table 1 Acronyms (Sheet 1 of 3)

Acronym	Description
ACU	Audio conference unit
AIS	Alarm indication system
APC	American Power Conversion

Table 1 Acronyms (Sheet 2 of 3)

Acronym	Description
ASM	Analog station module (analog station media bay module)
ATA	Analog terminal adapter
BCM	Business Communications Manager
BRIM	Basic rate interface module (basic rate interface media bay module)
CAP	Central answering position
CFA	Carrier failure alarm
CLID	Calling line identification
CO	Central office
CSU	Channel service unit
CTM	Caller ID trunk module (caller ID trunk media bay module)
DDIM	Digital drop and insert MUX
DIMM	Dual in-line memory module
DMC	Digital mobility controller
DSM	Digital station module (digital station media bay module)
DSP	Digital signal processor
DSU	Data service unit
DTE	Data terminal equipment
DTM	Digital trunk module (digital trunk media bay module)
FEM	Fiber expansion module
FRU	Field replaceable unit
GASM	Global analog station module (global analog station media bay module)
GATM	Global analog trunk module (global analog trunk media bay module)
KEM	Key expansion module
KIM	Key indicator module
KRS	Keycode retrieval system (Nortel keycode retrieval system)
LAN	Local area network
LIU	Line isolation unit
MBM	Media bay module
MSC	Media services card
MWI	Message waiting indication
NIC	Network interface card
ONS	on-premise station
OSI	Open switch interval
PCI	Peripheral component interface
PEC	Processor expansion card
PSTN	Public switched telephone network
PSU	Power supply unit

Table 1 Acronyms (Sheet 3 of 3)

Acronym	Description
QoS	Quality of service
RAI	Remote alarm indication
RAID	Redundant array of independent disks
REN	Ringer equivalence number
RFO	Redundant feature option
RPS	Redundant power supply
SAPS	Station auxiliary power supply
SELV	Safety extra low voltage
SSD	System status display
UPS	Uninterruptable power supply
USB	Universal serial bus
VMWI	Visual message waiting indicator
VOIP	Voice over Internet protocol
WAN	Wide area network

Symbols and conventions used in this guide

These symbols are used to highlight critical information for the BCM system.

Caution: Alerts you to conditions where you can damage the equipment.

Danger: Alerts you to conditions where you can get an electrical shock.

Warning: Alerts you to conditions where you can cause the system to fail or work improperly.

Note: Alerts you to important information.

Tip: Alerts you to additional information that can help you perform a task.

Security Note: Indicates a point of system security where a default should be changed, or where the administrator needs to make a decision about the level of security required for the system.

Warning: Alerts you to ground yourself with an antistatic grounding strap before performing the maintenance procedure.

Warning: Alerts you to remove the BCM main unit and expansion unit power cords from the AC outlet before performing any maintenance procedure.

These conventions and symbols are used to represent the Business Series Terminal display and dialpad.

Convention	Example	Used for
Word in a special font (shown in the top line of the display)	Pswd:	Command line prompts on display telephones.
Underlined word in capital letters (shown in the bottom line of a two-line display telephone)	PLAY	Display option. Available on two-line display telephones. Press the button directly below the option on the display to proceed.
Dialpad buttons	#	Buttons you press on the dialpad to select a particular option.

These text conventions are used in this guide to indicate the information described:

Convention	Description
bold Courier text	Indicates command names and options and text that you must enter. Example: Use the **info** command. Example: Enter **show ip** {**alerts**|**routes**}.
italic text	Indicates book titles.
plain Courier text	Indicates command syntax and system output (for example, prompts and system messages). Example: Set Trap Monitor Filters
FEATURE HOLD RELEASE	Indicates that you press the button with the coordinating icon on whichever set you are using.

Related publications

This section provides a list of additional documents referred to in this guide. There are two types of publication: Technical Documents on page 31 and User Guides on page 31.

Technical Documents

System Installation

Upgrade Guide (N0060597)

BCM 4.0 Installation Checklist and Quick Start Guide (N0060602)

BCM1000 BCM 3.7 Installation and Maintenance Guide (N0008587 01)

BCM 4.0 for BCM1000 Installation and Maintenance Guide Addendum (N0060603)

Keycode Installation Guide (N0060625)

System Programming

BCM 4.0 Administration Guide (N0060598)

BCM 4.0 Device Configuration Guide (N0060600)

BCM 4.0 Networking Configuration Guide (N0060606)

BCM 4.0 Telset Administration Guide (N0060610)

Telephones and Peripherals

BCM 4.0 Telephony Device Installation Guide (N0060609)

Digital Mobility

Digital Mobility System Installation and Configuration Guide (N0000623)

T7406 Cordless Handset Installation Guide (P0606142)

IP Telephony

WLAN IP Telephony Installation and Configuration Guide (N0060634)

Call Pilot

CallPilot Manager Set Up and Operation Guide (N0027247)

CallPilot Telephone Administration Guide (N0060618)

User Guides

There are no references to specific user guides.

How to get help

This section explains how to get help for Nortel products and services.

Getting Help from the Nortel Web site

The best way to get technical support for Nortel products is from the Nortel Technical Support Web site:

http://www.nortel.com/support

This site provides quick access to software, documentation, bulletins, and tools to address issues with Nortel products. More specifically, the site enables you to:

- download software, documentation, and product bulletins
- search the Technical Support Web site and the Nortel Knowledge Base for answers to technical issues
- sign up for automatic notification of new software and documentation for Nortel equipment
- open and manage technical support cases

Getting Help over the phone from a Nortel Solutions Center

If you don't find the information you require on the Nortel Technical Support Web site, and have a Nortel support contract, you can also get help over the phone from a Nortel Solutions Center.

In North America, call 1-800-4NORTEL (1-800-466-7835).

Outside North America, go to the following Web site to obtain the phone number for your region:

http://www.nortel.com/callus

Getting Help from a specialist by using an Express Routing Code

To access some Nortel Technical Solutions Centers, you can use an Express Routing Code (ERC) to quickly route your call to a specialist in your Nortel product or service. To locate the ERC for your product or service, go to:

http://www.nortel.com/erc

Getting Help through a Nortel distributor or reseller

If you purchased a service contract for your Nortel product from a distributor or authorized reseller, contact the technical support staff for that distributor or reseller.

Chapter 2
Introducing the BCM hardware

The Nortel Business Communications Manager (BCM) system provides private network and telephony management capability to small and medium-sized businesses. The BCM system integrates voice and data capabilities, voice over Internet protocol (VoIP) gateway functions, and quality of service (QoS) data-routing features into a single telephony system. The BCM system is a compact system that enables you to create and provide telephony applications for use in a business environment.

Refer to the following sections for information on the BCM hardware components:

- "Main units"
- "BCM400 advanced function tray" on page 39
- "Base function tray component hardware" on page 41
- "BCM expansion unit (BCM400 only)" on page 51
- "MBM bays and backplane" on page 52
- "Media bay modules (MBMs)" on page 53
- "BCM400 expansion gateway" on page 64
- "BCM components" on page 65
- "Field replaceable units (FRU)" on page 71
- "Telephones and adapters" on page 74

Note: Some of the components described in this document are not available in all areas. Ask your Nortel sales agent for information about availability.

Main units

The primary hardware component in the BCM system is the main unit:

- BCM200 main unit (see "BCM200 main unit")
- BCM400 main unit (see "BCM400 main unit" on page 36)

Warning: External equipment connected to the auxiliary ringer, page relay, page output, and music-on-hold interfaces must use safety extra low voltage (SELV). All four interfaces are SELV, and the external equipment connected to these interfaces must be SELV. If these interfaces are not SELV, you must use external line isolation units (LIU).

BCM200 main unit

Figure 1 illustrates the BCM200 main unit, and Table 1 describes the main unit components.

Figure 1 BCM200 main unit components

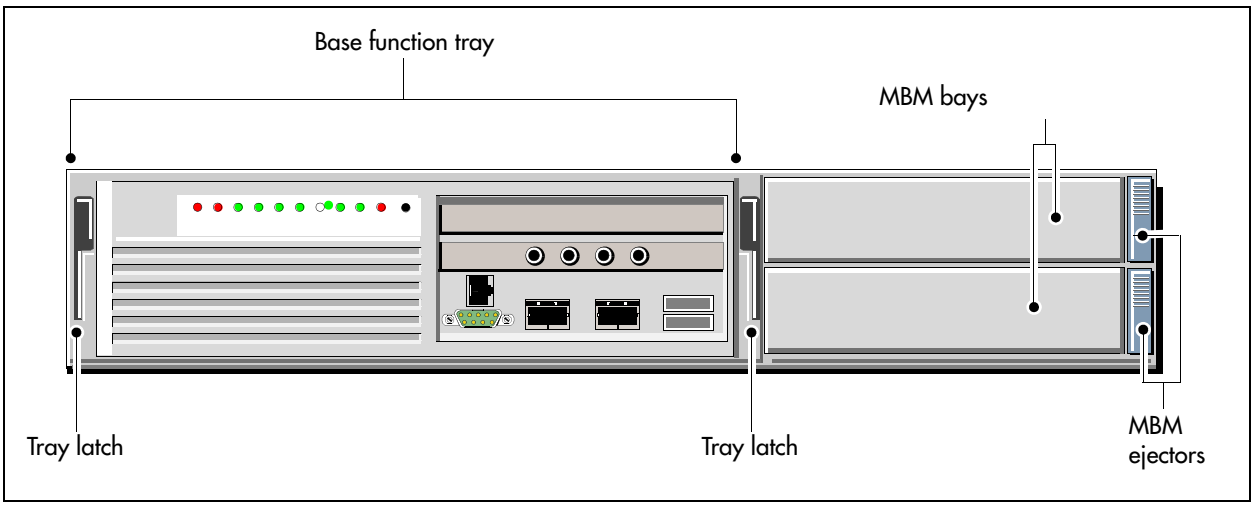

Table 1 BCM200 main unit component descriptions

Component	Description
Base function tray	The sliding base function tray provides call processing functions and interface connections. See “Base function tray component hardware” on page 41.
Tray latch	The tray latch enables you to remove the base function tray.
Media bay module (MBM) bays	The MBM bay is a slot into which you install an MBM. The BCM200 main unit has two MBM bays. See “Media bay modules (MBMs)” on page 53.
MBM ejectors	The MBM ejector enables you to remove an MBM from the MBM bay.

Figure 2 shows the location of the BCM200 main unit internal components. Table 2 describes the internal components.

Figure 2 BCM200 main unit internal components

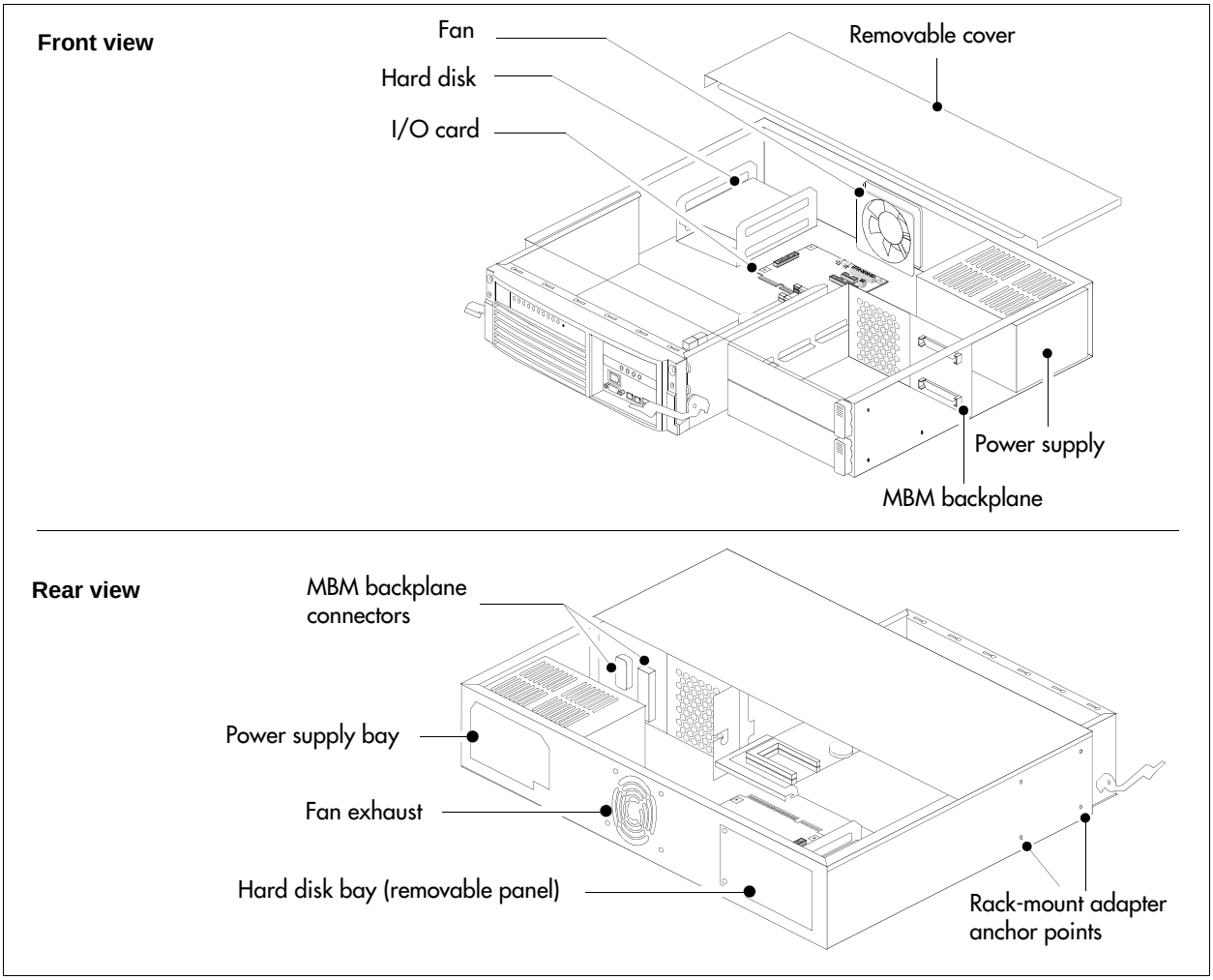

Table 2 BCM200 main unit internal component descriptions

Component	Description
Hard disk	The programmed hard disk (or field redundancy upgrade) provides an additional hard disk and redundant array of independent disks (RAID) controller card. See "Hard disk" on page 68.
Power supply	The auto-sensing power supply (standard) provides power to the main unit (see "BCM power supply" on page 65).
Cooling fan	The system cooling fan forces warm air out of the main unit (see "Cooling fan" on page 70).
I/O card	The I/O interface card provides a signal junction between the base function tray, hard disk, power supply, and cooling system (see "I/O interface card" on page 50).
MBM backplane	The MBM backplane provides the MBM component interface to the power supply and main card (see "MBM bays and backplane" on page 52).
Removable cover	The removable cover provides access to internal components.

BCM400 main unit

The BCM400 main unit is available either in a standard or redundant feature option (RFO) configuration.

Figure 3 illustrates the BCM400 main unit, and Table 3 describes the main unit components. These components are the same for the standard and RFO configurations.

Figure 3 BCM400 main unit components

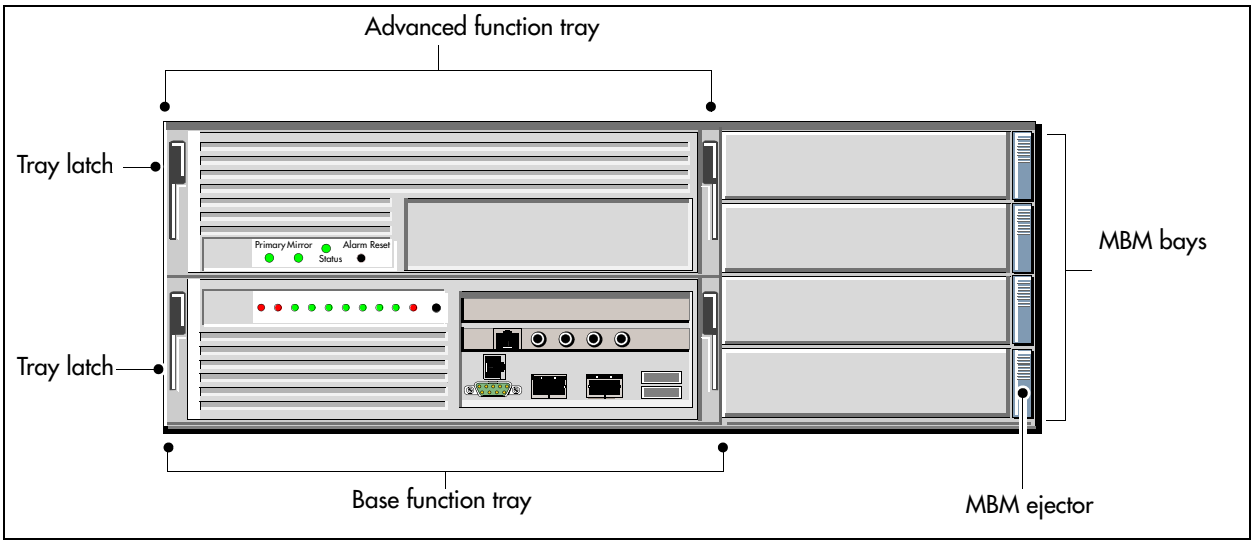

Table 3 BCM400 main unit component descriptions

Component	Description
Base function tray	The sliding base function tray provides call processing functions and interface connections. See “Base function tray component hardware” on page 41.
Advanced function tray	The sliding advanced function tray contains a hard disk and a bay for future use. See “BCM400 advanced function tray” on page 39.
Tray latch	The tray latch enables you to remove the base function tray or the advanced function tray.
Media bay module (MBM) bay	The MBM bay is a slot into which you install an MBM. See “Media bay modules (MBMs)” on page 53.
MBM ejector	The MBM ejector enables you to remove an MBM from the MBM bay.

Figure 4 shows the BCM400 main unit standard configuration internal components, while Figure 5 shows the BCM400 main unit RFO internal components. Table 4 describes the internal components.

Figure 4 BCM400 main unit internal components (standard configuration)

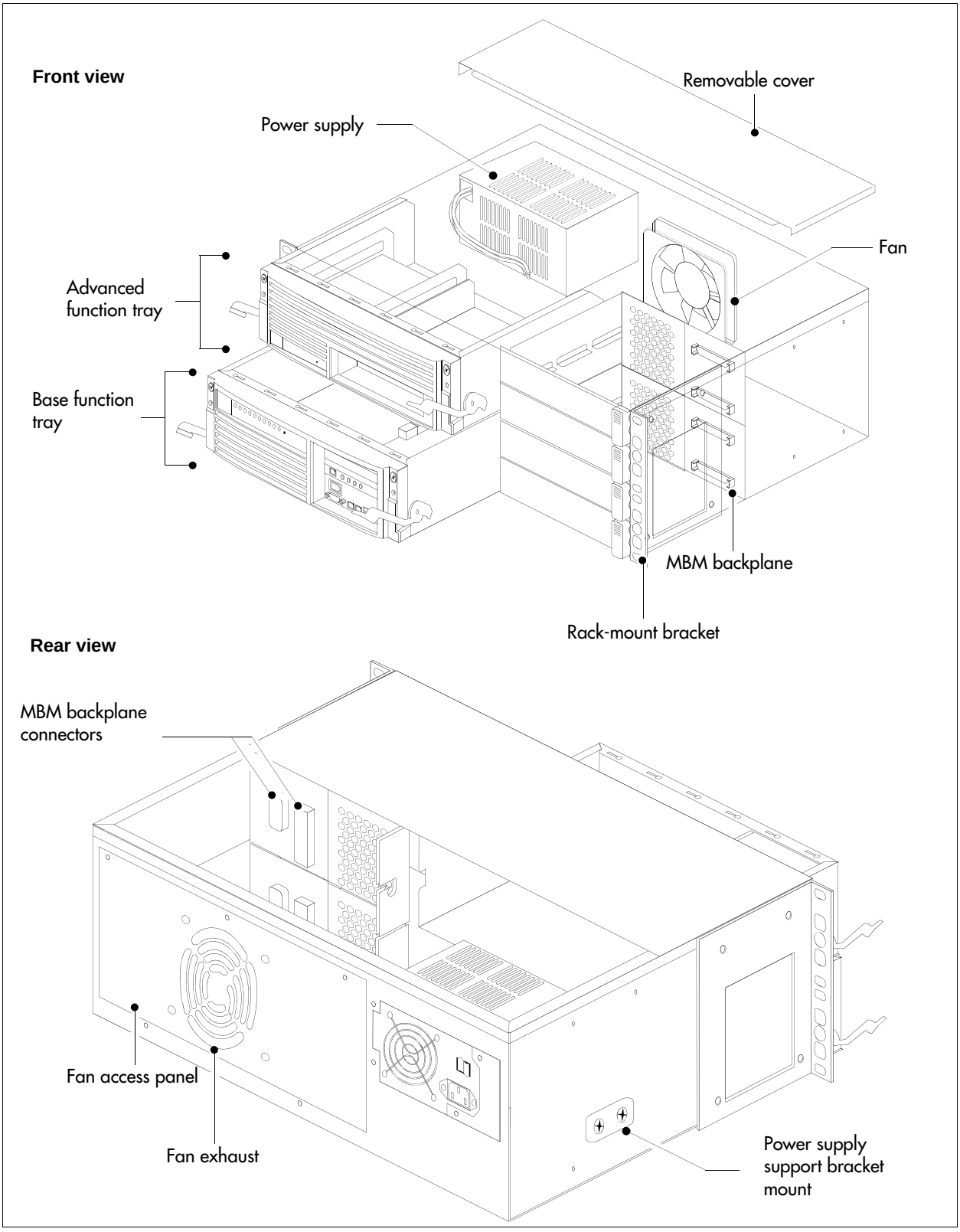

Figure 5 BCM400 main unit internal components (RFO configuration)

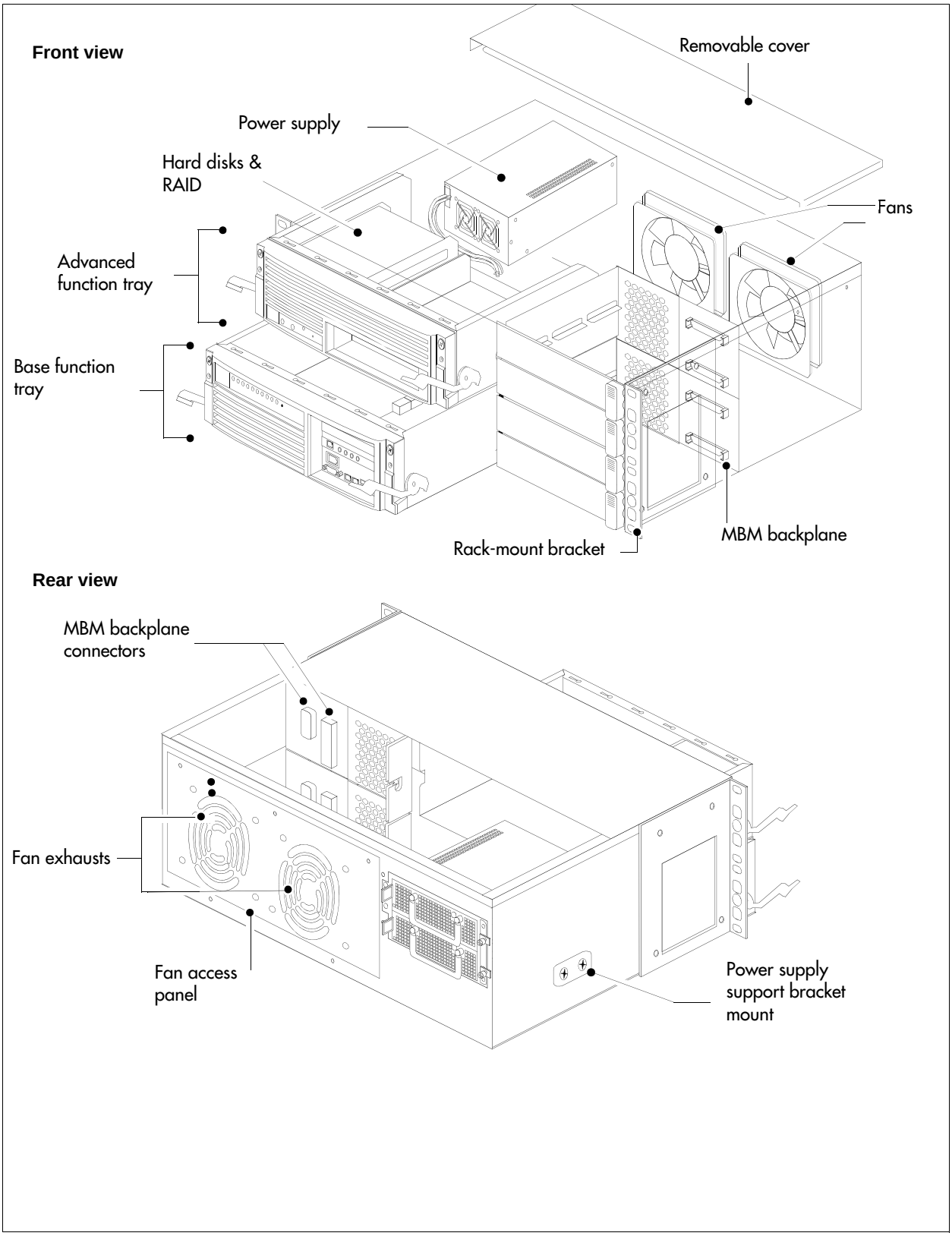

Table 4 BCM400 main unit internal component descriptions (standard and RFO configurations)

Component	Description
Front view	
Removable cover	The removable cover provides access to internal components.
Power supply	**Standard:** The auto-sensing power supply (standard) provides power to the main unit (see "BCM power supply" on page 65). **RFO:** The two redundant, hot-swappable power supply modules provide power to the main unit (see "BCM power supply" on page 65).
Cooling fan	**Standard:** The system cooling fan forces warm air out of the main unit (see "Cooling fan" on page 70). **RFO:** The two system cooling fans force warm air out of the main unit (see "Cooling fan" on page 70).
MBM backplane	The MBM backplane provides the MBM component interface to the power supply and main card (see "MBM bays and backplane" on page 52).
Rack-mount bracket	The rack-mount bracket is required to install the main unit in an equipment rack.
Hard disk and RAID	The two hard disks and RAID controller card.
Rear view	
MBM backplane connector	The MBM backplane connector connects to the MSC and power supply.
Fan access panel	The fan access panel provides access to the fans for maintenance purposes.
Fan exhausts	The fan exhausts allow the fans to move warm air outside the main unit.
Power supply support bracket mount	The power supply support bracket stabilizes the power supply when mounted in the main unit.

BCM400 advanced function tray

The advanced function tray houses the hard disk assembly and an extra, unpopulated bay. The standard configuration contains a single hard disk and has no redundant array of independent disks (RAID) LED display.

The advanced function tray in the RFO configuration contains two hard disks and a RAID controller card, and has an LED display to monitor RAID status. The extra, unpopulated bay is reserved for future development. The advanced function tray mounts in the upper BCM400 main unit bay. The advanced function tray slides out and away from the front of the main unit for hard disk maintenance, RAID upgrade, or exchange purposes.

Figure 6 illustrates the advanced function tray and faceplate interfaces for the BCM400 standard and RFO configurations.

Figure 6 Advanced function tray

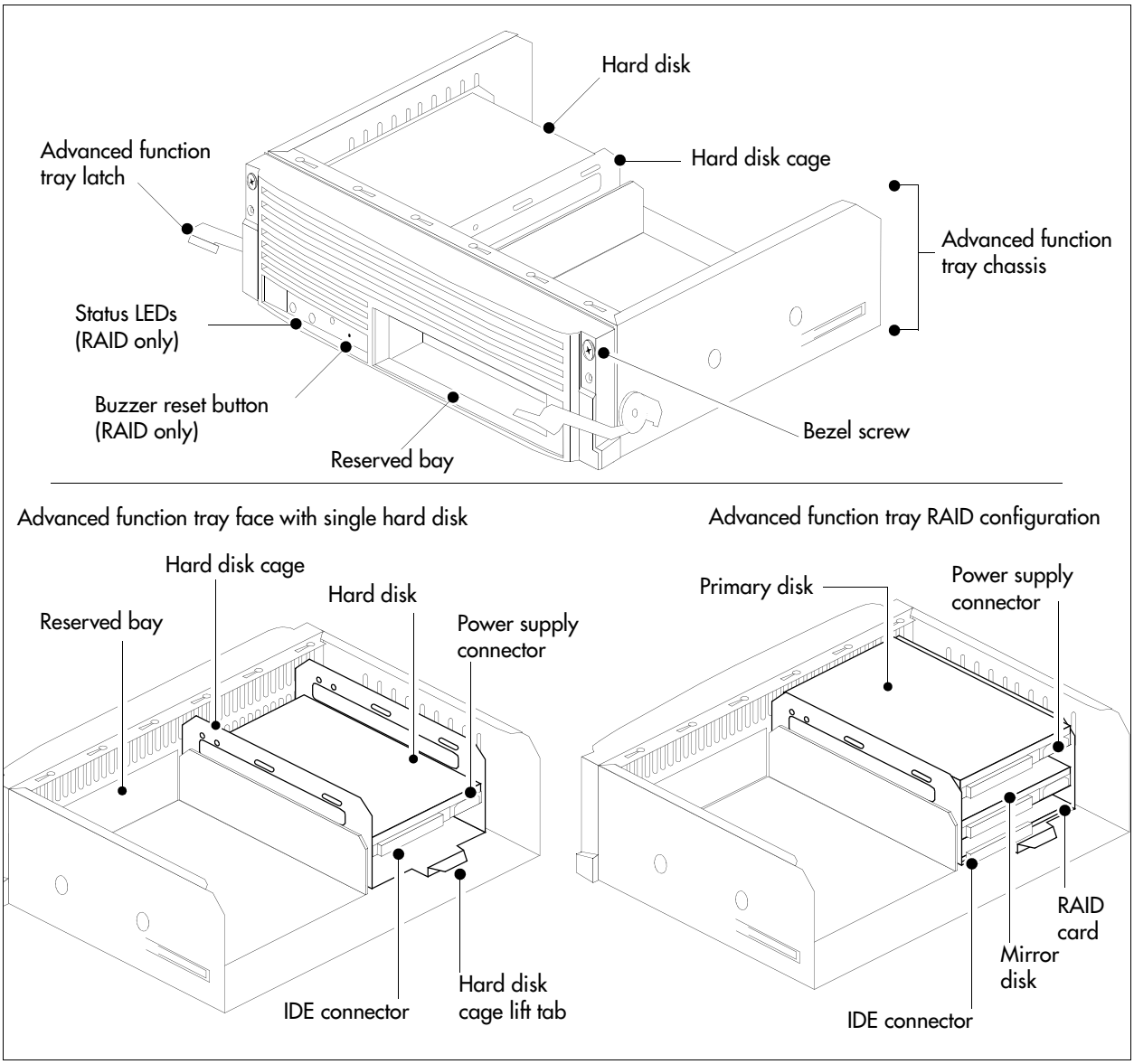

BCM400 advanced function tray RAID status LEDs

Three LEDs are located on the bezel face of the advanced function tray (see Figure 7). The LEDs show the current state of redundant array of independent disks (RAID) hardware components.

The RAID status LEDs indicate monitoring of the following:

- Primary hard disk activity
- Mirror hard disk activity
- RAID card status activity

Figure 7 Advanced function tray RAID status LEDs

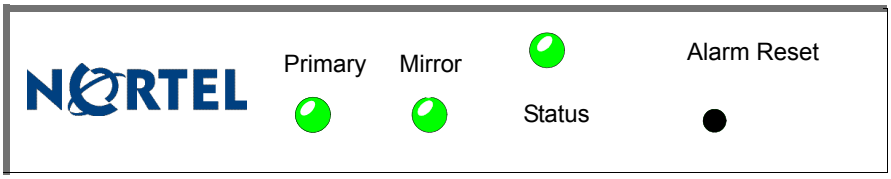

Base function tray component hardware

This section describes the following base function tray components:

- "Base function tray faceplate components" on page 41
- "Base function tray internal components" on page 42
- "Main card" on page 45
- "Data networking components" on page 48
- "I/O interface card" on page 50

Base function tray faceplate components

Figure 8 illustrates the base function tray faceplate components. Table 5 describes the faceplate components.

Figure 8 Base function tray faceplate components

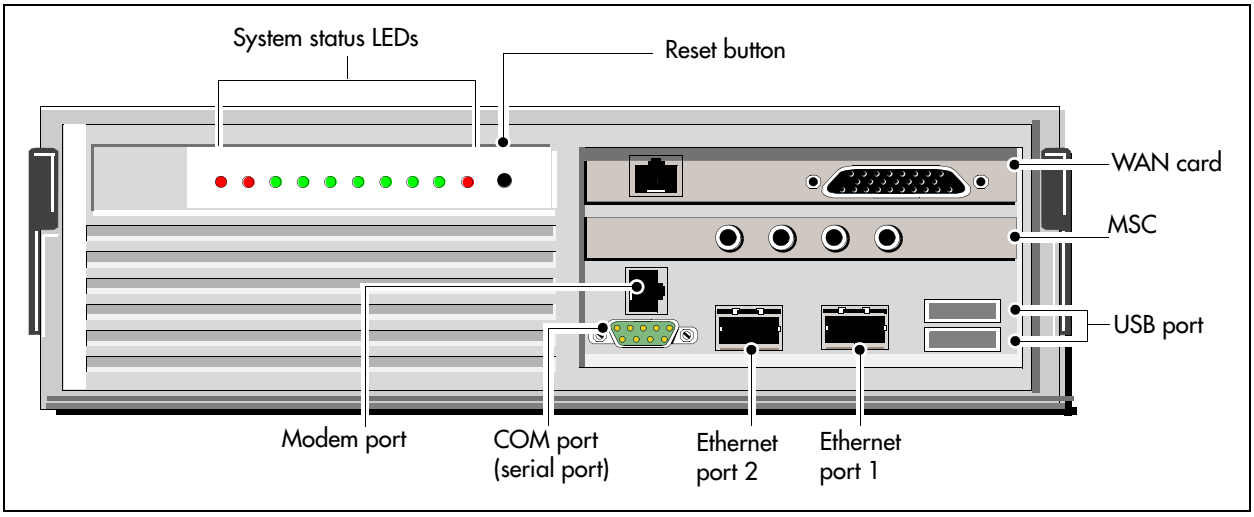

Table 5 Base function tray faceplate component descriptions

Component	Description
System status LEDs	The system status display LEDs indicate the current status of the hardware components (see “Base function tray system status display LEDs” on page 79).
Reset button	The reset button restarts the BCM system.
WAN card	The WAN card (field upgrade) connects the BCM system to the wide area network (WAN). See “WAN interface card” on page 48.
Media services card (MSC)	The MSC performs call processing and media processing of the voice channels for the BCM system. See “Media services card (MSC)” on page 43.
USB (universal serial bus) port	The two USB ports connect USB-compatible peripherals to the BCM system.
Modem port	The modem port provides PSTN dial-up access to the BCM system.
COM port (or serial port)	The COM port provides a serial connection to a laptop for maintenance purposes. See “Connecting through the serial port” on page 181.
Ethernet port 2	Ethernet port 2 provides access to the internal local area network.
Ethernet port 1	Ethernet port 1 provides access to the external local area network.

Base function tray internal components

The base function tray installs in the main unit and houses the main card with the system interfaces.

Figure 9 illustrates the base function tray layout (BCM200 configuration shown). Table 6 describes the internal components.

Figure 9 Base function tray internal components

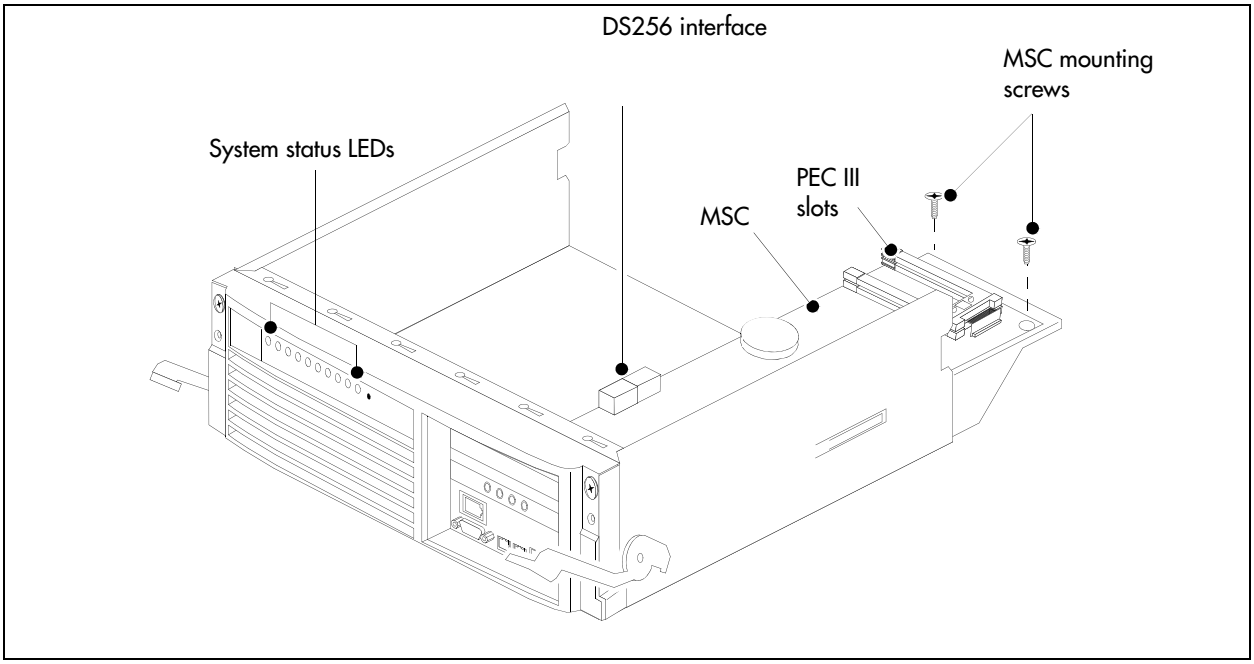

Table 6 Base function tray internal component descriptions

Component	Description
System status LEDs	The system status display LEDs indicate the current status of the hardware components (see "Base function tray system status display LEDs" on page 79).
DS256 interface	The DS256 interface connects to MBM backplane DS30 connectors.
PEC III slots	The PEC III slots provide connections for installing PECs.
Media services card (MSC)	The MSC performs call processing and media processing of the voice channels for the BCM system. See "Media services card (MSC)" on page 43.
MSC mounting screws	These screws are used to mount the MSC in the main unit.

Media services card (MSC)

The media services card (MSC) is a peripheral component interface (PCI) card that performs call processing and media processing of the voice channels for the BCM system, including VoIP trunks. The MSC also offers connections for auxiliary features, including external customer-supplied hardware for paging and music-on-hold.

Figure 10 shows the BCM200 MSC components. Figure 11 shows the BCM400 MSC components. Table 7 describes the MSC faceplate optional connectors.

Figure 10 BCM200 MSC components

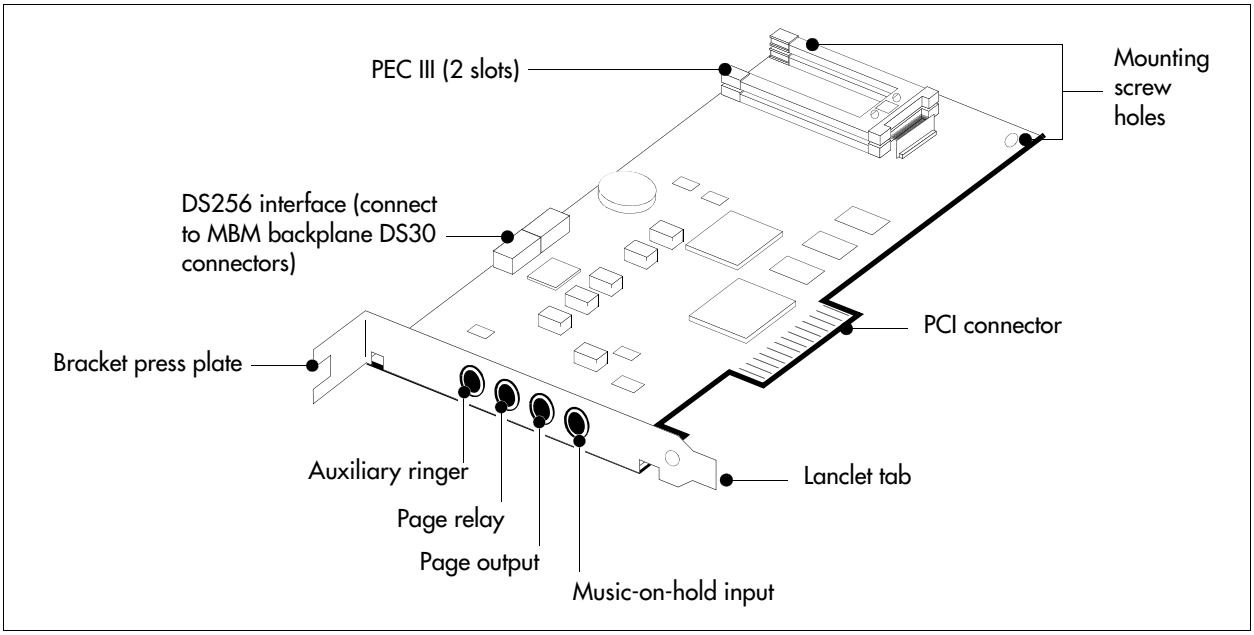

Figure 11 BCM400 MSC components

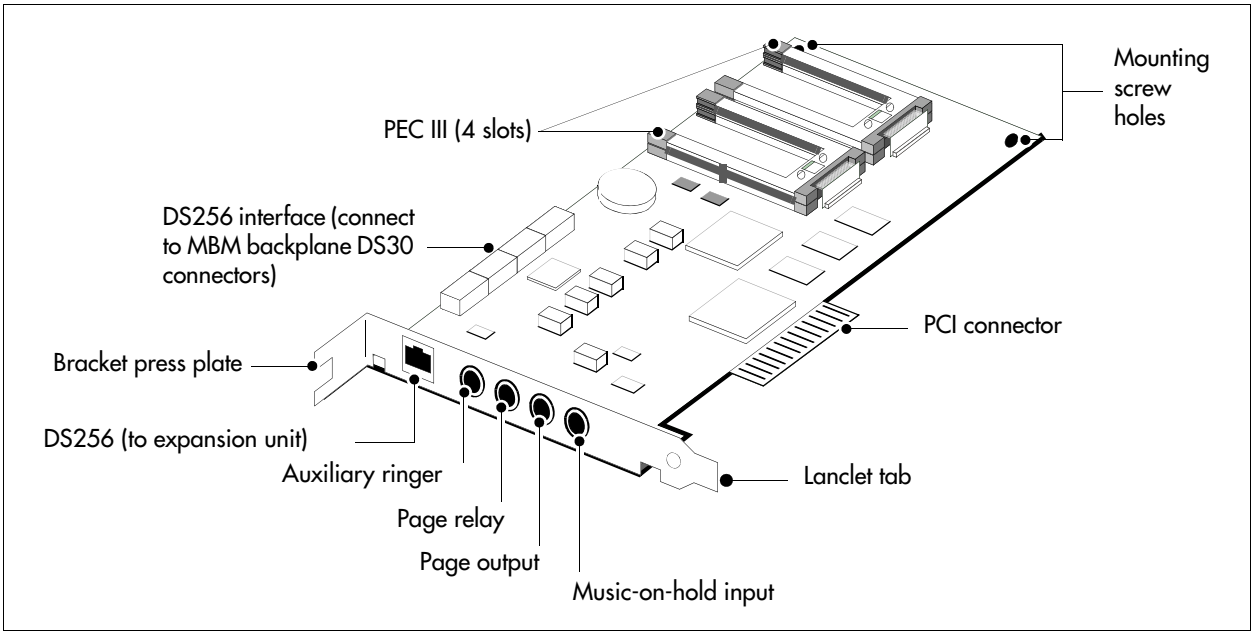

Table 7 MSC faceplate optional connectors

Connectors	Description
DS256 connector (BCM400)	The BCM expansion unit connects to the BCM main unit through the DS256 jack on the MSC faceplate. The DS256 cable to make this connection is provided with the purchase of a BCM expansion unit.
Auxiliary ringer jack	The BCM system uses the auxiliary ringer jack to control the cadence of an auxiliary ringer (customer supplied). You must use this output in a low current, low voltage application only. Do not use this output for switching the auxiliary ringer directly.
Page relay jack	When you use the page signal output jack to connect an external paging amplifier, you also use the page relay jack. The page relay jack connects a floating relay contact pair. The BCM system uses this jack to control the external paging amplifier.
Page output jack	The BCM system uses the page output to connect an internally generated voice paging signal to an external paging amplifier (customer supplied).
Music-on-hold jack	The BCM system uses the music-on-hold input to connect an external music source that supplies a signal to held lines (music-on-hold) or telephone speakers (background music). The input source can be any available radio or music source approved for connection to the network.
For directions on setting up these features, refer to “Installing optional telephony equipment” on page 175.	

Warning: External equipment connected to the auxiliary ringer, page relay, page output, and music-on-hold interfaces must use safety extra low voltage (SELV). All four interfaces are (SELV) and the external equipment connected to these interfaces must be SELV. If these interfaces are not SELV, you must use external line isolation units (LIU).

MSC IP call processing hardware

If your system requires a high volume of IP telephones or more IP trunks than the standard eight trunks, you can switch a DS30 bus setting on the MSC from providing service for an MBM, to providing digital processing service for additional IP telephones and trunks. To ensure adequate data flow from the system, you can increase the number of PEC III cards (BCM200 can have maximum of two cards; BCM400 can have a maximum of four).

- **DS30 buses:** DS30 buses contain internal communication paths. Each DS30 bus provides up to 32 signaling channels and 32 media channels.
  - Two DS30 buses are exclusively dedicated to MSC data resources. Five paths within these buses have hard-coded applications. The other paths can be assigned to various data applications, such as voice mail, dialup ISDN WAN, VoIP trunks, or IP telephony.
  - Five DS30 buses are exclusively reserved for the MBMs.
  - One DS30 bus can be switched to accommodate MBMs or more channels for IP telephones or VoIP trunks. You control the use of this bus by using either a 2/6 or 3/5 DS30 bus split. This is set when you configure the system.
- **PEC IIIs:** PEC IIIs increase the digital signal processing capacity for voice mail, call center, fax, VoIP trunks, IP telephony, and dial-up ISDN WAN features. The BCM200 system uses one PEC III card (expandable to two). The BCM400 system uses two PEC IIIs (expandable to four) to accommodate increased requirements for media processing.

Main card

The main card contains several field replaceable units (FRUs), such as the RAM, modem card, and CMOS battery. A riser card, set at right angles to the main card, provides connections for the MSC and a field-installed wide area network card (WAN). Figure 12 shows the layout of the main card as installed in the base function tray.

Figure 12 Main card connectors (installed in the base function tray)

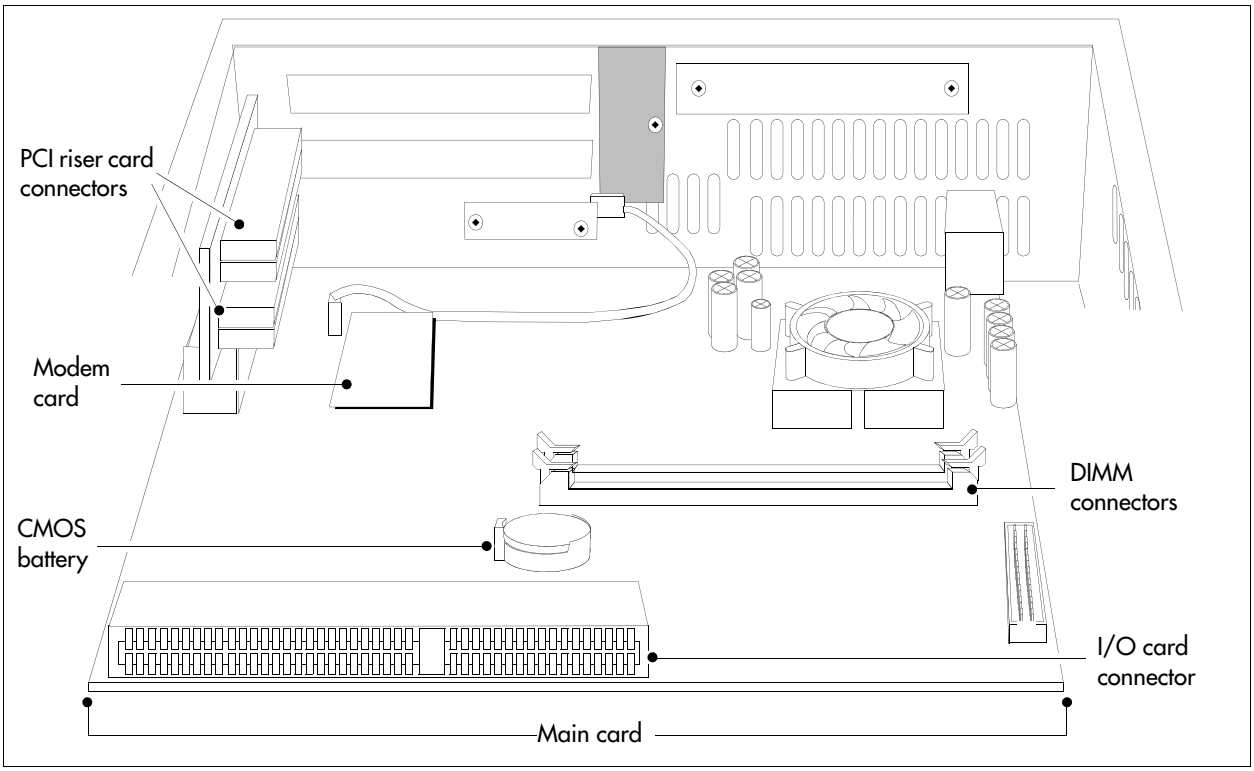

Main card connections

The main card provides peripheral and telephony processing control for the BCM system. The main card connects to the I/O card, system status display (SSD) card, and modem interface card. Figure 13 shows the main card and I/O card connectors.

Figure 13 Card connections

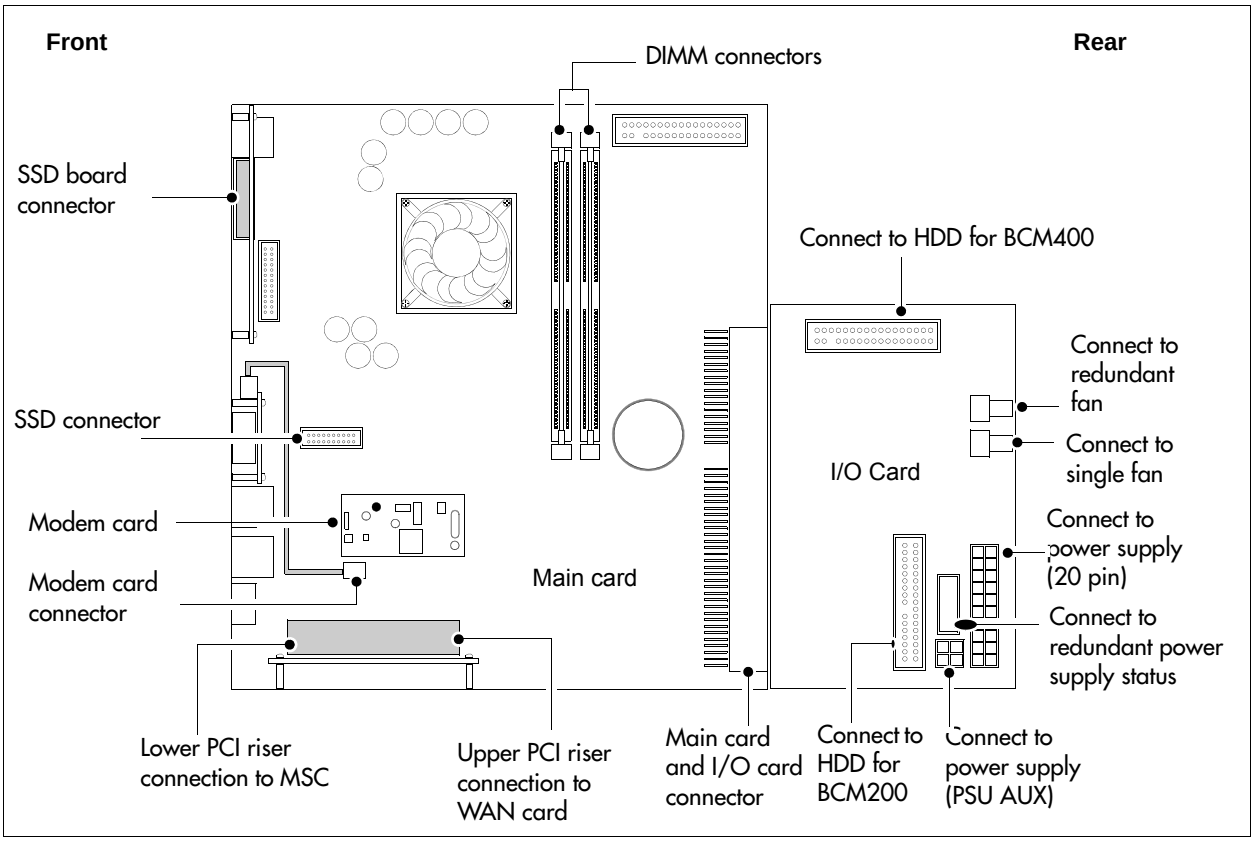

PCI riser card

The peripheral component interface (PCI) riser card extends upward, and at a right angle, from the main card. The PCI riser card provides a PCI for the MSC and field-installed WAN cards. Figure 14 shows the PCI riser card installed in the base function tray.

Figure 15 shows the PCI connectors without the MSC or WAN cards. Two screws at the top of the PCI riser card attach the card to the side of the base function tray.

Figure 14 PCI riser card (installed in base function tray)

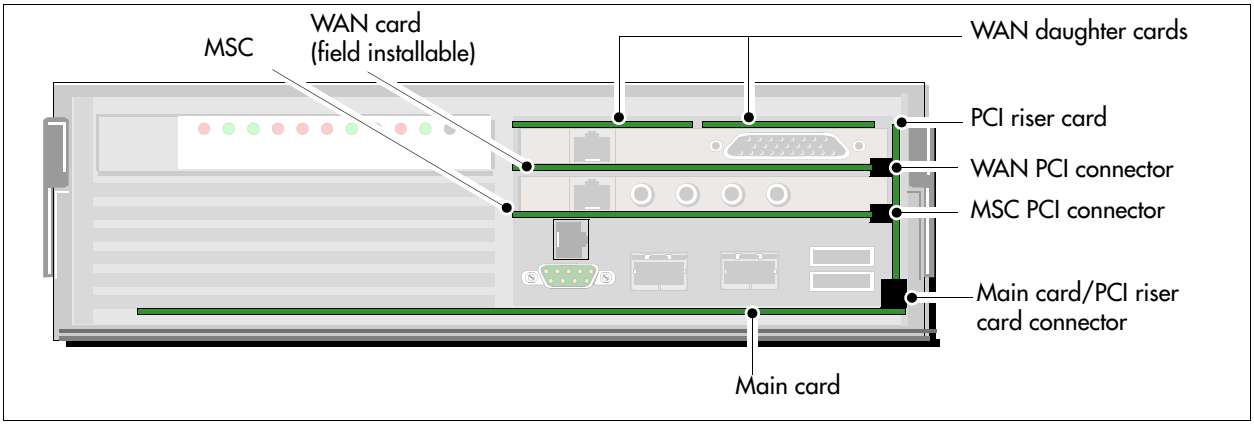

Figure 15 PCI riser card connectors

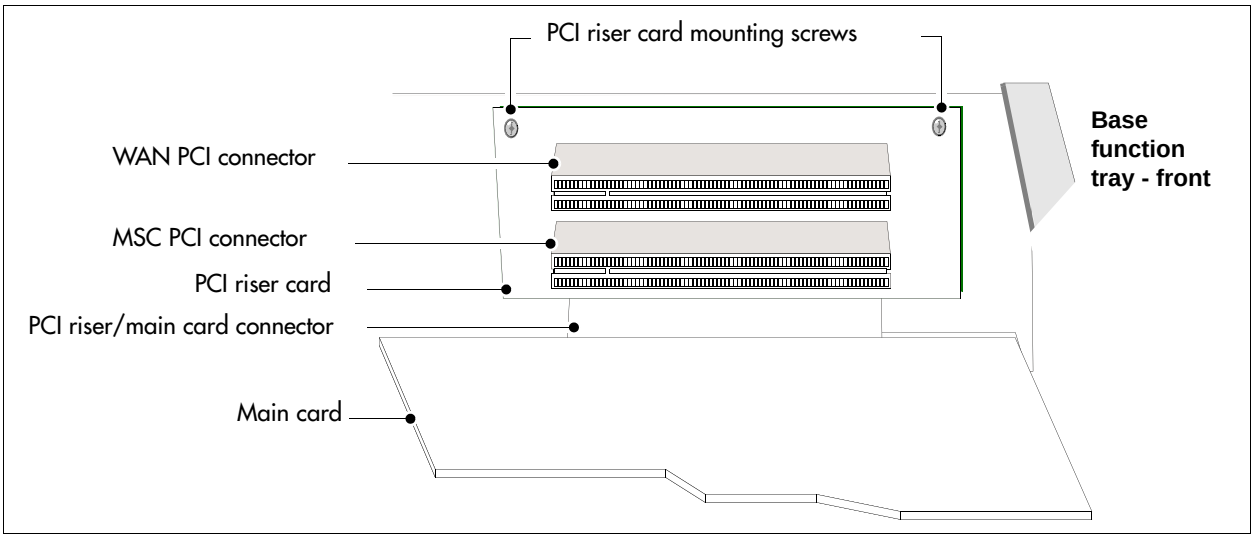

Data networking components

The data networking components connect the BCM system to the WAN.

WAN interface card

The network interface card (NIC) uses a T1 interface and sync port that connects the BCM system to the WAN. The WAN card is available as a field replaceable unit. For further information on removal, installation, and initialization, refer to "Replacing cards" on page 301.

The international WAN card version (Europe, Middle East, Africa [EMEA]) connects to a channelized T1 TDM circuit with an X.21 or V.35 interface (see Figure 16 on page 49).

The dual V.35 WAN card version connects to channelized T1 TDM circuits using two V.35 interfaces (North America) (see Figure 17 on page 49).

The North American WAN card version connects to a channelized T1 TDM circuit with an integrated T1 DSU/CSU or a V.35 interface, or both (see Figure 18 on page 49).

Figure 16 WAN interface card (international version)

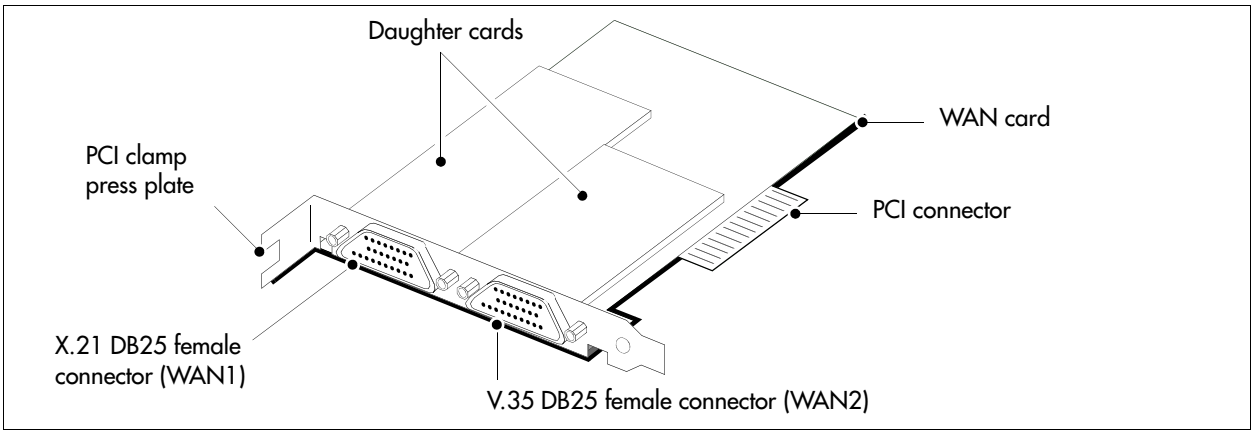

Figure 17 Dual V.35 WAN interface card

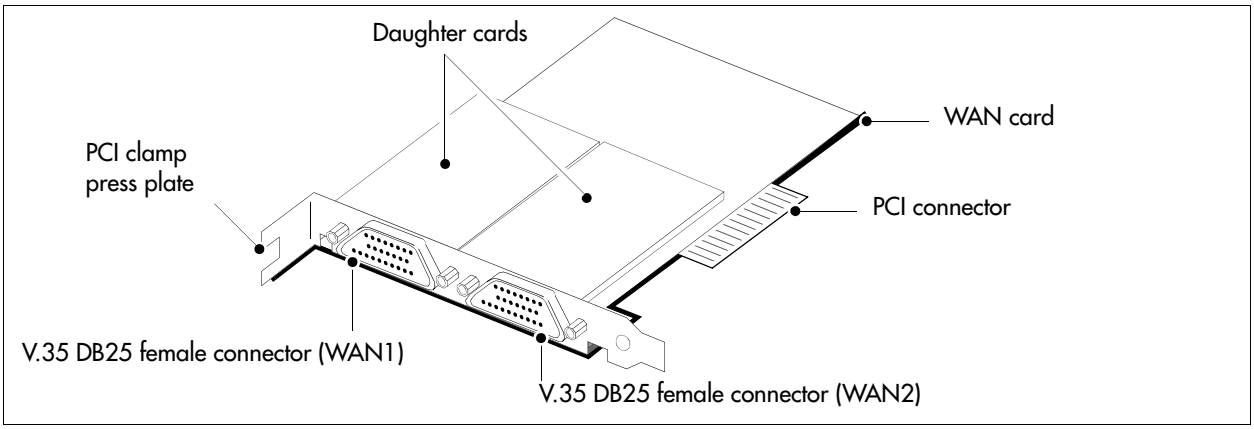

Figure 18 WAN interface card (North American version)

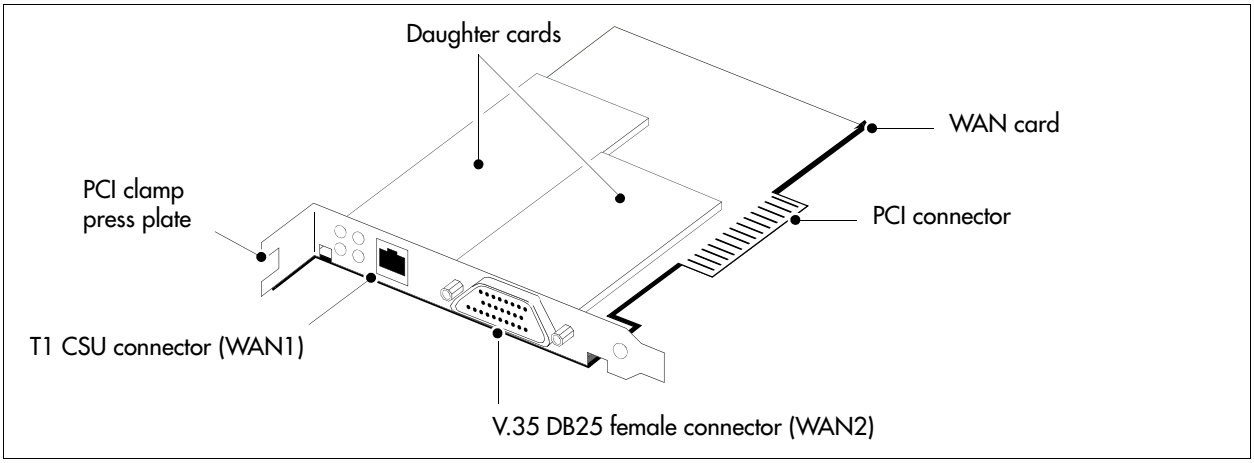

Modem card

The V.92 (or V.90) modem connects the BCM system to the public switched telephone network (PSTN), enabling the BCM system to send and receive data. The modem card is standard on North American systems, while it is optional for APAC and EMEA. The modem kit consists of a modem card, RJ-11 interface, and connector cable. For further information on installation and removal, see "To install a modem card" on page 311 and "To remove the modem card" on page 309.

Figure 19 shows the modem components.

Use the modem connection to:

- manage the BCM system from a different location
- provide dial-up backup for a WAN card

Figure 19 Modem card and interface

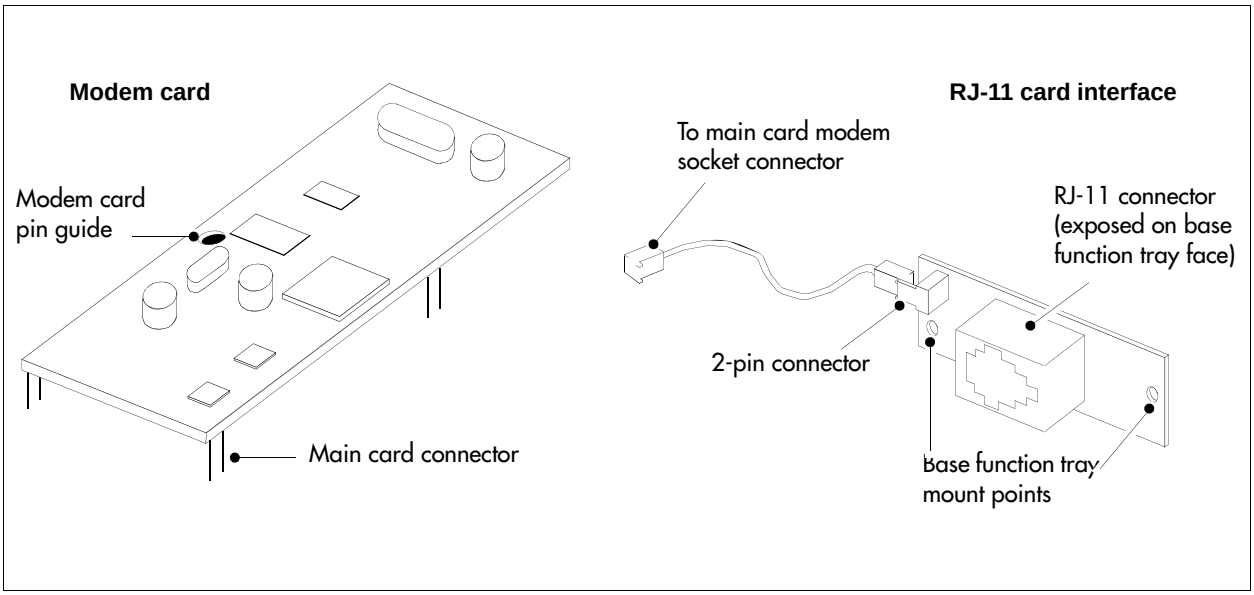

I/O interface card

The I/O interface card provides a signal junction between the base function tray, hard disk, power supply, and cooling system. Figure 20 shows the I/O interface card and connections.

Figure 20 I/O interface card connectors

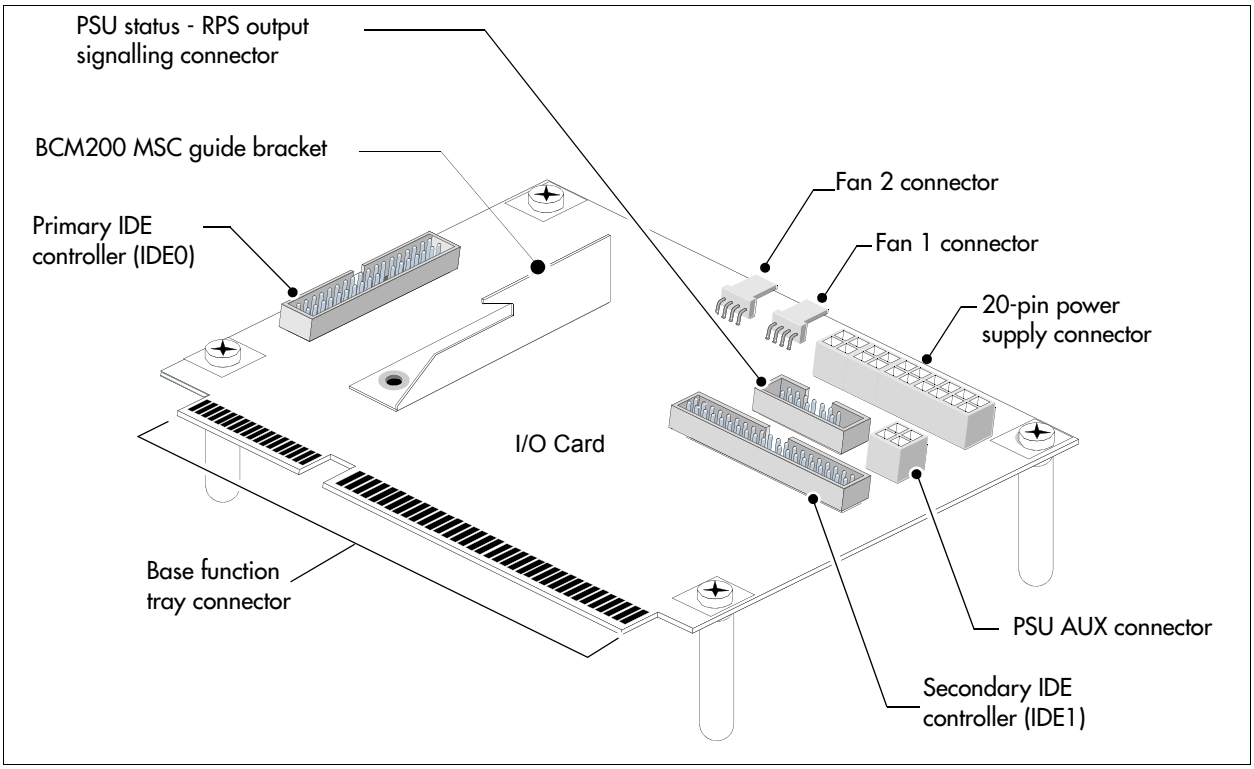

BCM expansion unit (BCM400 only)

In addition to a main unit, the BCM400 system can have one expansion unit. The expansion unit is not compatible with the BCM200 system. The BCM expansion unit contains six additional bays for MBMs.

The supplied DS256 cable is 5 m (16 ft.) long and connects into a DS256 port on the MSC of the main unit, and into a DS256 port on the center panel of the expansion unit (see Figure 21). Use of any other cable is not supported. See "Installing an expansion unit" on page 103 for more information on installing a expansion unit.

Note: The number of MBMs that you can install is determined by the number of DS30 buses required by the MBMs and the number of buses available.
Refer to Chapter 8, "Installing a media bay module (MBM)," on page 107.

Figure 21 BCM expansion unit connected to BCM400 main unit

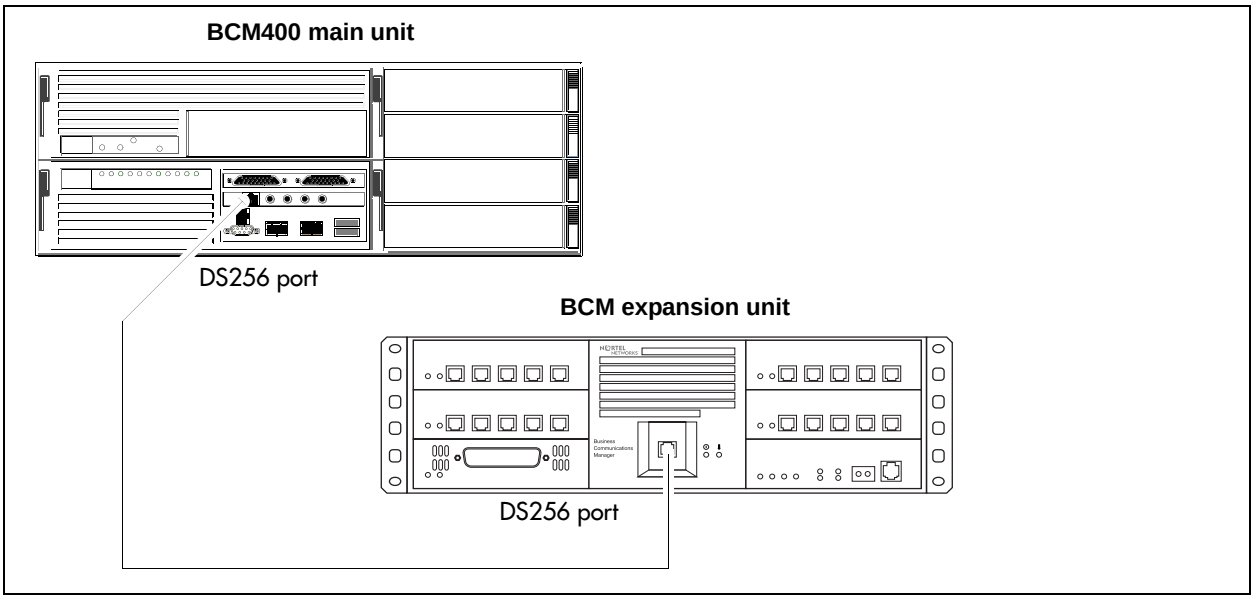

MBM bays and backplane

The number and configuration of the MBMs depend on the number of bays available in the main unit and DS30 system resources. The BCM200 main unit provides two MBM bays. The BCM400 main unit provides four MBM bays.

All MBM bays must contain either an MBM or an MBM filler blanking plate. Fill unpopulated MBM bay openings in the main unit with the MBM filler blanking plates (see Figure 22).

Figure 22 MBM filler blanking plate

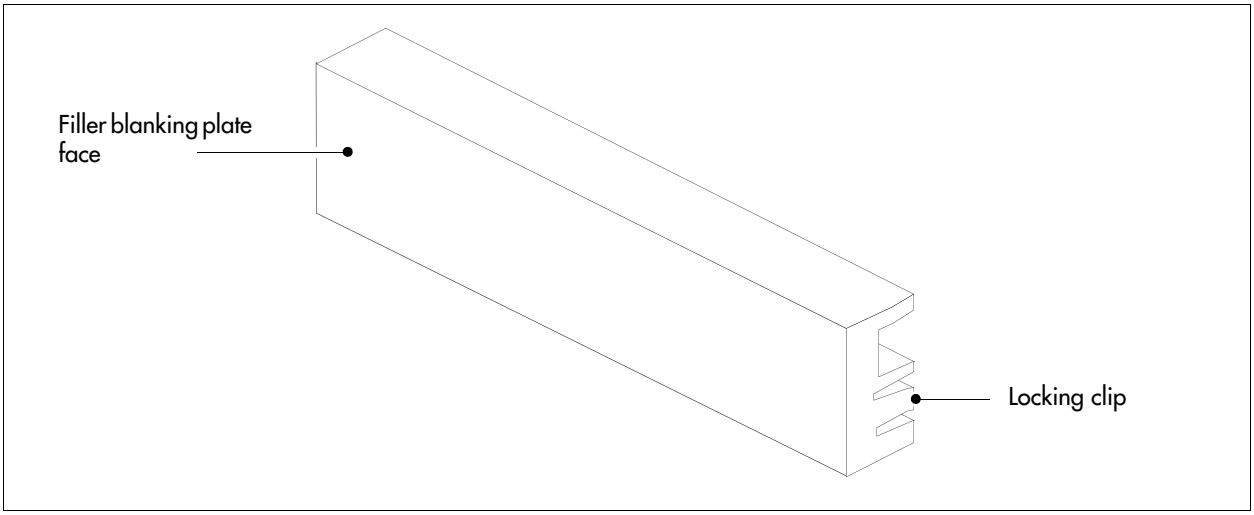

The MBMs slide into the MBM bays and lock into place. Pull on the MBM ejector to release the MBM or filler blanking plate. The MBM or filler blanking plate partially ejects from the bay. Slide the MBM out of the bay to remove it from the main unit.

The MBM backplane provides the MBM component interface to the power supply and main card. The MBM backplane mounts at the rear of the MBM bays and is a non-replaceable component. Figure 23 illustrates the BCM200 MBM backplane and connectors.

Figure 23 BCM200 MBM backplane

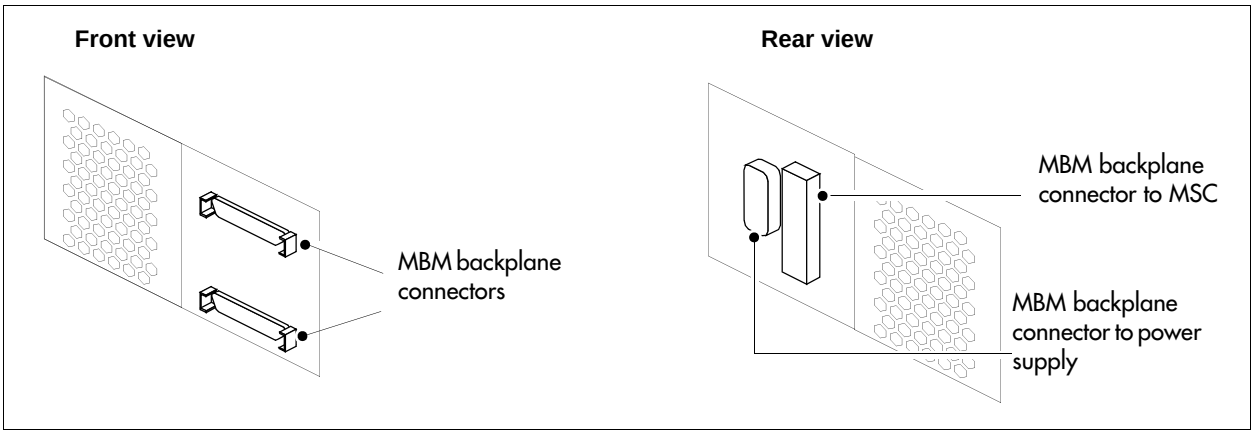

Figure 24 illustrates the BCM400 MBM backplane and connectors.

Figure 24 BCM400 MBM backplane

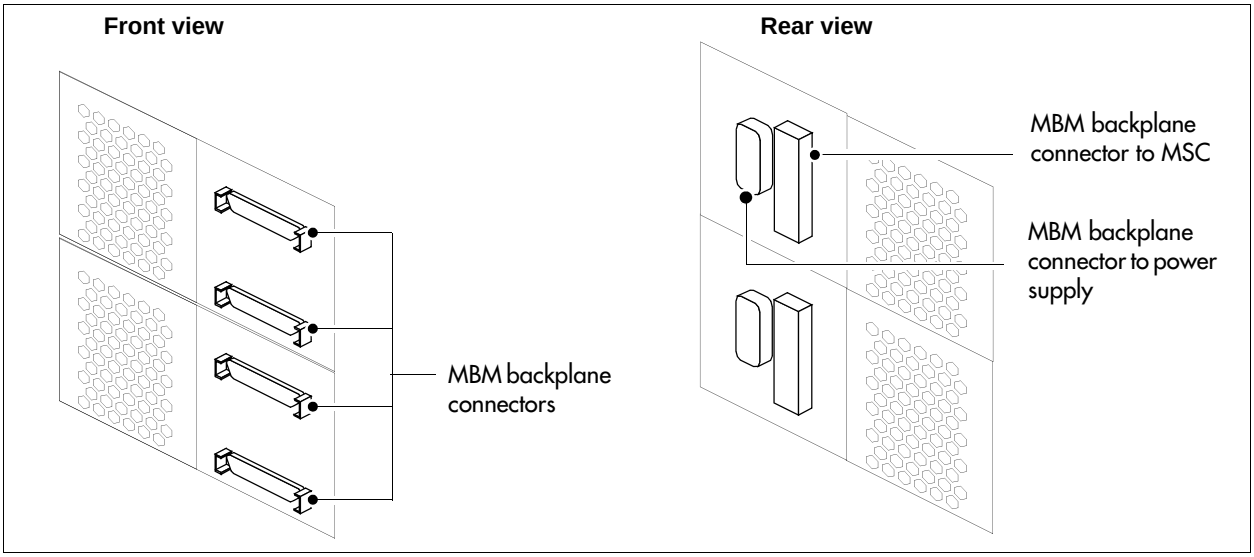

Media bay modules (MBMs)

The BCM system is modular. You can increase the capacity of the system by adding more media bay modules (MBMs). Each BCM allocates a maximum of six DS30 buses to the MBMs. The number of MBMs that can be added to your system is determined by the number of media bays that are open, combined with the number of DS30 buses each component uses.

If your system requires many IP lines or trunks, you can reduce the number of DS30 buses that are assigned to MBMs and increase the number of buses available to IP telephones. This is known as a 3/5 DS30 bus split. In this case, you only have five DS30 buses available for use by the MBMs. Refer to "Understanding DS30 numbers" on page 111 for more information.

Warning: Changing the DS30 bus split

If you change the bus split from 2/6 (default) to 3/5 after the system is initialized, any module set to DS30 bus 7 or requiring the use of bus 7 becomes inoperable.

If you change the bus split from a 3/5 split to a 2/6 split after the system is initialized, all data is lost and all optional applications must be reinstalled and reconfigured.

Figure 25 Telephony hardware components

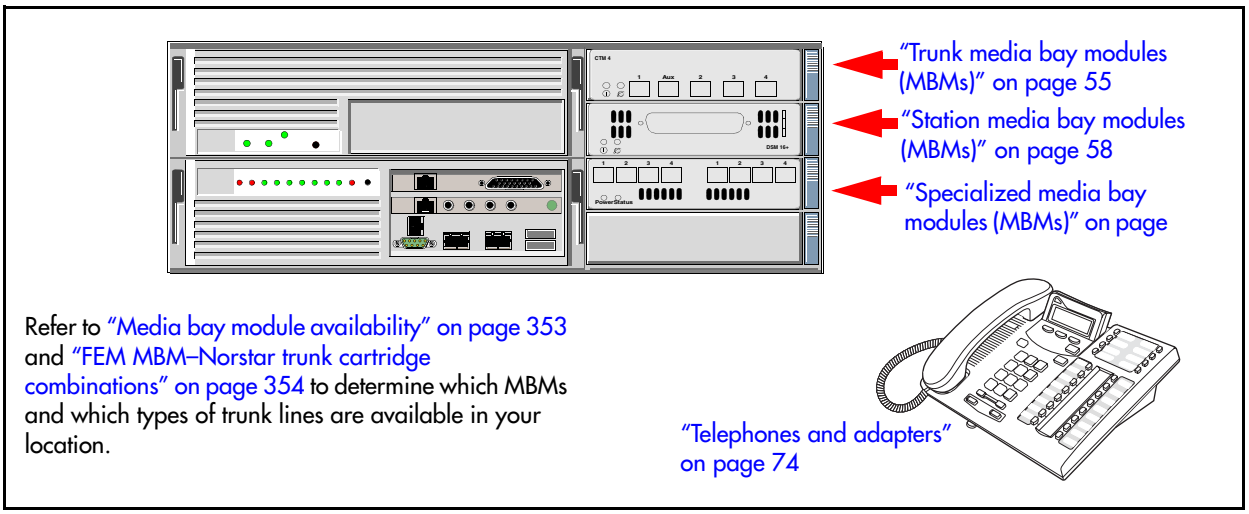

The MBMs connect with external devices to implement various types of voice trunks and extensions. Install the MBMs in the MBM bays in the BCM200 or BCM400 main units and the BCM expansion unit.

MBMs have LEDs on the faceplate. For information on MBM LEDs, see "Viewing the BCM system LEDs" on page 79.

Note: Refer to "Media bay module availability" on page 353 to determine which MBMs and which types of trunk lines are available in your location.

The back of the MBM has a single connector that provides signaling channels, media channels, and power to the MBM. This connector plugs into the MBM backplane in the main unit or expansion unit. Some MBMs also have a cooling fan that runs off the MBM power source. Figure 26 shows the rear views of the two types of MBMs.

Figure 26 MBM connectors (rear view)

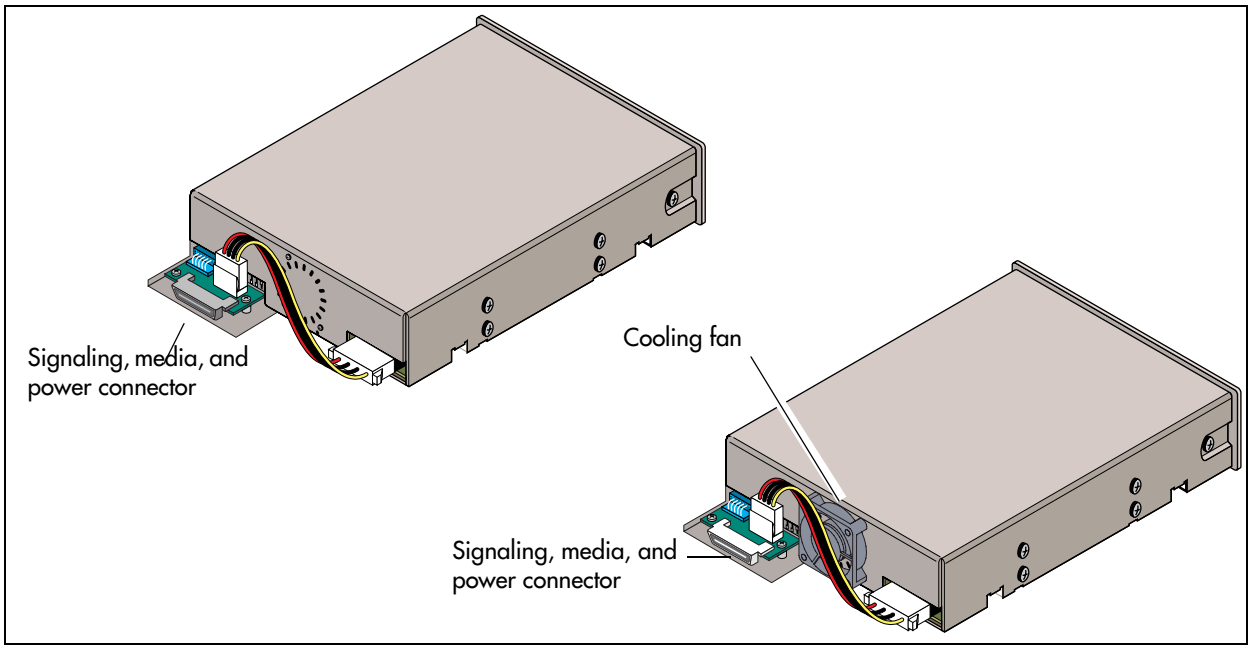

This section provides information on the following telephony MBMs:

- "Trunk media bay modules (MBMs)" on page 55
- "Station media bay modules (MBMs)" on page 58
- "Specialized media bay modules (MBMs)" on page 63

Trunk media bay modules (MBMs)

You install the trunk MBMs in the BCM main unit or the BCM expansion unit. Trunk MBMs connect telecommunications lines to the BCM system.

The type of MBM you install is determined by:

- which lines are available from your telephone service provider
- what lines you require for the types of telephones you want to use
- budget considerations

Table 8 lists the types of trunk MBMs that are available for the BCM system.

Table 8 Trunk MBMs (Sheet 1 of 2)

MBM	What it does	Special notes
DTM (see "Digital trunk media bay module" on page 56)	Connects digital public switched telephone lines to the BCM system.	Install in the BCM main unit only. DTMs do not function if installed in the BCM expansion unit.
CTM4/CTM8 (see "Caller ID trunk media bay module" on page 57)	Connects a maximum of four (CTM4) or eight (CTM8) analog public switched telephone lines to the BCM system.	

Table 8 Trunk MBMs (Sheet 2 of 2)

MBM	What it does	Special notes
ISDN BRI (see "Basic rate interface media bay module" on page 57)	Connects a maximum of four ISDN BRI S/T interfaces.	
GATM4/GATM8 (see "Global analog trunk media bay module" on page 58)	Connects either four (GATM4) or eight (GATM8) analog public switched telephone lines to the BCM system.	
Note: Refer to "Market profile attributes" on page 353 for supported market profiles.		

Digital trunk media bay module

The digital trunk media bay module (DTM) connects to a standard digital PSTN T1/fT1, E1/fE1, or PRI ISDN line using either a digital or PRI line. The DTM also supports DASS2, DPN22, Q.SIG, and MCDN over ISDN:

- On North American BCM systems, the DTM connects a T1 or PRI circuit to the BCM system; T1 circuits provide 24 digital channels to the PSTN, while PRI circuits provide 23 digital channels to the PSTN.
- On International BCM systems, the DTM connects an ETSI ISDN (E1) or PRI (EI) circuit to the BCM system, providing a maximum of 30 digital channels to the PSTN.

Warning: Install DTMs in the BCM main unit only. DTMs do not function if installed in the BCM expansion unit.
If there are no empty MBM bays in the BCM main unit, move MBMs to the expansion unit to provide space for the DTMs.

The front bezel of the DTM has an RJ-48C connector that connects the DTM to the service provider connection point. The faceplate also has a set of monitor jacks you can use to monitor the span.

There are six additional LEDs on the front of the DTM. For information about these additional LEDs, refer to "DTM LEDs" on page 82.

Figure 27 shows the DTM module interfaces.

Figure 27 DTM faceplate

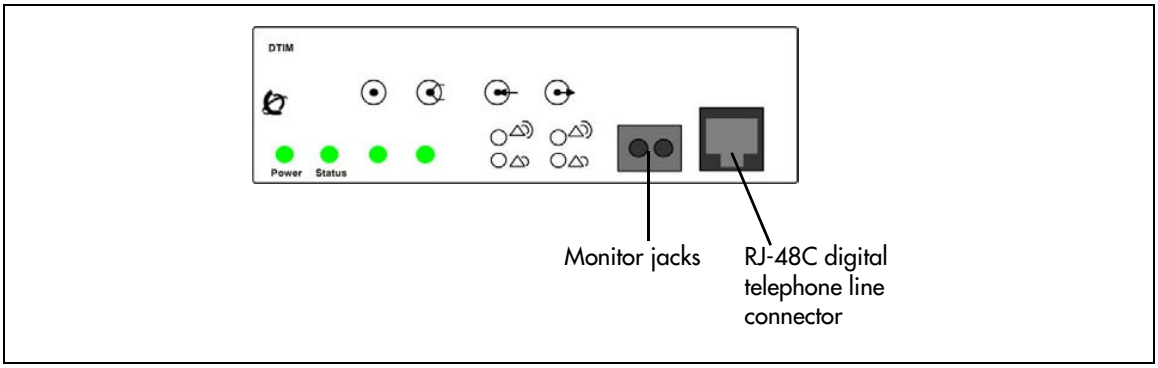

Tip: You can install a maximum of three DTM modules in the BCM main unit, depending on the available buses.

Caller ID trunk media bay module

There are two Caller ID trunk media bay modules (CTM):

- **CTM4**
  The CTM4 connects a maximum of four analog calling line ID (CLID) interfaces to the BCM system through four RJ-11 jacks on the MBM faceplate. These jacks are labeled Line 1, Auxiliary, Line 2, Line 3, and Line 4. The auxiliary jack connects to Line 1.
- **CTM8**
  The CTM8 provides eight analog CLID interfaces to the BCM system through eight RJ-11 jacks on the MBM faceplate. Each jack also supports disconnect supervision. There are two auxiliary jacks on this MBM which connect to Line 1 and Line 5.

The auxiliary ports enable you to connect to a V.92 or V.90 modem, fax machine, or analog telephone. When the auxiliary device is active, the BCM system disables the associated line. Conversely, when the line is active, the auxiliary port line is disabled. When you connect an analog telephone to the auxiliary port, you can use it as an emergency telephone because this line remains active during a power outage.

Figure 28 shows the front of the CTM4 and CTM8.

Figure 28 CTM4 and CTM8 module faceplate LEDS and connectors

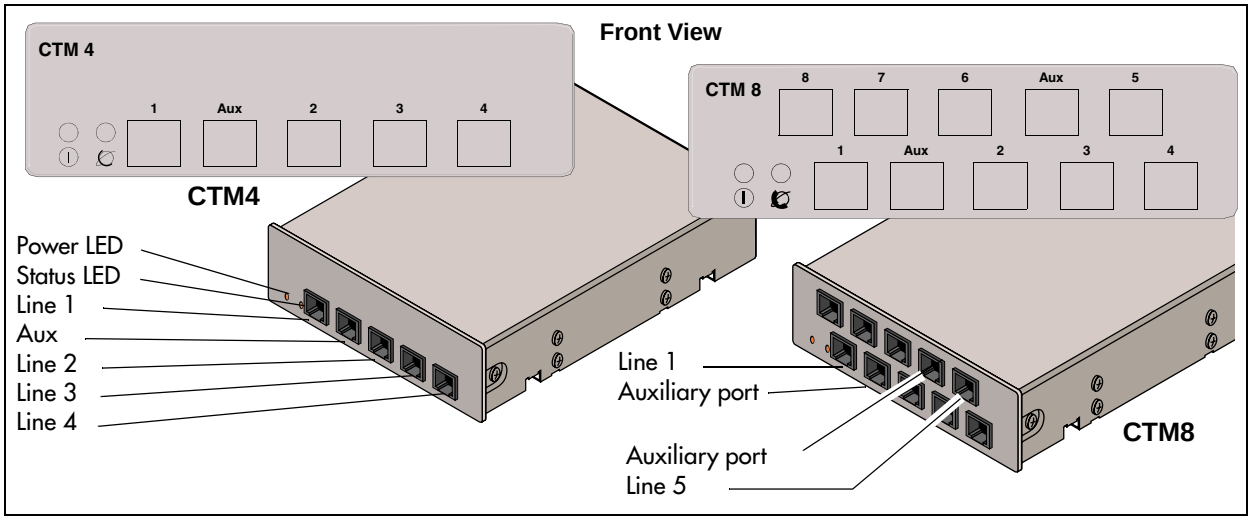

Basic rate interface media bay module

The basic rate interface media bay module (BRIM) connects a maximum of four BRI ISDN loops to the BCM system. The BRIM only recognizes the T-interface used in European networks. To use the BRIM with the U-interface, typical in North American networks, you require an external NT1 box to convert the U-interface to a T-interface.

Each BRI ISDN loop you connect adds two telephone lines to the BCM system. Therefore, each BRIM adds a maximum of eight lines to the BCM system through the four RJ-48C jacks on the faceplate. The LEDs beside each RJ-48C jack are on when the ISDN line is active. Figure 29 on page 58 shows the BRIM faceplate LEDs and connections.

Figure 29 BRIM faceplate

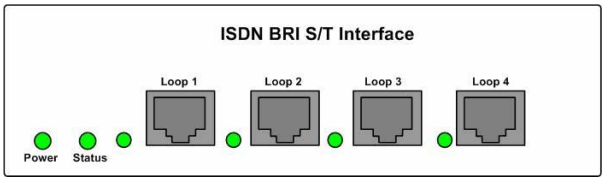

Global analog trunk media bay module

The global analog trunk media bay module (GATM) provides an interface for four or eight analog public switched telephone network (PSTN) lines. The GATM supports both pulse and tone dialing, as well as caller ID and disconnect supervision in selected markets throughout the world.

The GATM uses an RJ-21 connector as the trunk interface. Figure 30 shows the GATM faceplate LEDs and RJ-21 connector. The GATM is available either in four-port (GATM4) or eight-port (GATM8) configurations.

Figure 30 GATM faceplate

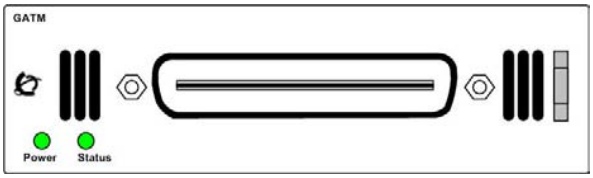

Station media bay modules (MBMs)

Station (MBM) connect telephones and analog telecommunication devices to the BCM system.

Table 9 lists the available station MBMs.

Table 9 Station MBMs (Sheet 1 of 2)

MBM	What it does	Special notes
DSM16(+)/DSM32(+) (see "Digital station media bay module" on page 59)	Connects a maximum of 16 (DSM16+) or 32 (DSM32+) digital telephones to the BCM system.	
4x16 Combination of a CTM4 and a DSM16 (see "4x16 media bay module" on page 60)	Connects a maximum of four analog public switched telephone lines to the BCM system. Also connects a maximum of 16 digital telephones to the BCM system.	

Table 9 Station MBMs (Sheet 2 of 2)

MBM	What it does	Special notes
ASM/ASM8 (see "Analog station media bay modules" on page 60)	Connects a maximum of eight analog devices to the BCM system.	
ASM8+/GASM (see "Analog station media bay modules" on page 60)	Connects a maximum of eight analog devices to the BCM system. The GASM provides the following additional services: caller ID, pass through, message waiting indication, and disconnect supervision at the telephone. The GASM also allows you to download new firmware.	
Note: Refer to "Market profile attributes" on page 353 for supported regions.		

Digital station media bay module

The digital station media bay modules (DSM) support digital telephones on the BCM system. This section describes the DSM16(+) and DSM32(+) MBMs (see Figure 31).

The DSMs have the following characteristics:

- DSM16(+) — supports 16 digital telephones through one RJ-21 connector. Set the double density switch to enable the DSM to carry 16 extensions over a half DS30 bus. If required, install a second DSM16(+) and set the double density switch to occupy the second half of the DS30 bus to expand the number of extensions to 32.
- DSM32(+) — supports 32 digital telephones through two RJ-21 connectors. A DSM32(+) operating in single-density mode occupies two DS30 buses. Set the double density switch to enable the DSM to carry 32 extensions over a single DS30 bus.

Note: Devices that share a DS30 bus must be similar. Use two DSM16(+) module in double density mode on a single DS30 bus. Do not mix a DSM16(+) module with a DSM32(+) module over a single DS30 bus.

Figure 31 DSM faceplate LEDs and connectors

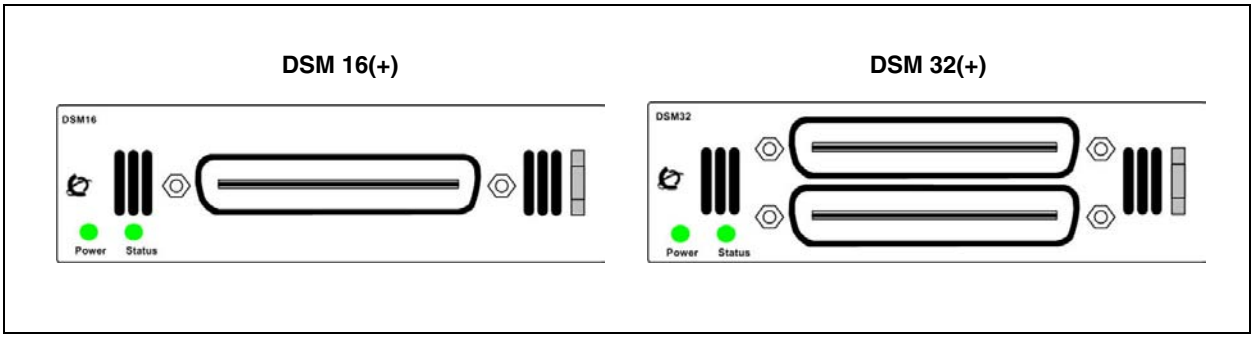

4x16 media bay module

The 4x16 media bay module (MBM) provides both analog trunk connections and connections to digital telephones. The 4x16 MBM provides connections for four analog trunk lines and 16 digital telephones. Each of the four analog trunk lines support caller ID and disconnect supervision. An auxiliary port next to the Line 1 port enables you to use an analog telephony device, such as a modem, fax, or telephone, to share the trunk.

Figure 32 shows the 4x16 MBM. The 4x16 MBM has one RJ-21 connector and five RJ-11 connectors on the faceplate.

Figure 32 4x16 faceplate LEDS and connectors

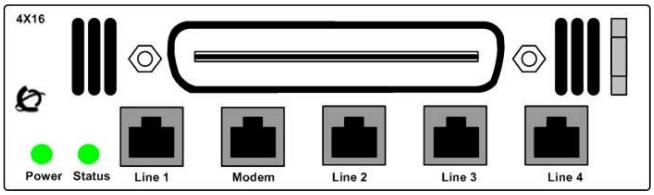

Analog station media bay modules

The analog station media bay modules (ASM, ASM8, ASM8+, and GASM8) can connect to a maximum of eight analog telecommunication devices. These devices are standard analog telephones, cordless telephones, fax machines, answering machines, or modems. The maximum speed for a modem connection is 28.8 kbit/s.

In addition to ASM8 features, the ASM8+ and GASM8 offer the following features:

- Visual Message Waiting Indicator (VMWI) — LED indicates to the end user that a message is waiting.
- Disconnect supervision (Open Switch Interval [OSI] as per EIA/TIA 464) — indicates to the attached device, in an established communication, that the connected device should release the call (see disconnect supervision note).
- Caller ID — provides the name, phone number, and other information about the caller to the end user at the start of the call.
- Firmware downloading capability — allows the system to upgrade the ASM8+ and GASM8 firmware at customer sites.
- Enhanced ringing capability — ASM8+ and GASM8 provide a ringing voltage of 2 REN/65 V rms per port.
- Calling line identification (CLID)
- The GASM8 is designated as an ONS (on-premise station) port.

Disconnect supervision note: The central office disconnects the call after the ASM8+ provides an open switch interval (OSI) to the off-hook station of 850 ms (TIA/EIA 464 section 5.4.10.2.4; minimum is 600 ms) as a disconnect signal. If the station remains on-hook after the disconnect signal, the ASM8+ disconnects the station equipment from the network without returning a tone to it (TIA/EIA 464 section 5.4.10.2.5[1]). After the station equipment goes on-hook, the ASM8+ station interface is restored to on-hook (idle).

It is important to ensure that the device, application, or interface card connected to an ASM8+ station interface conform to these on-hook and off-hook conditions.

The ASM, ASM8, ASM8+, and GASM8 each have one RJ-21 connector on the faceplate. Figure 33 on page 61 shows the GASM8.

Figure 33 GASM8 faceplate LEDs and connectors

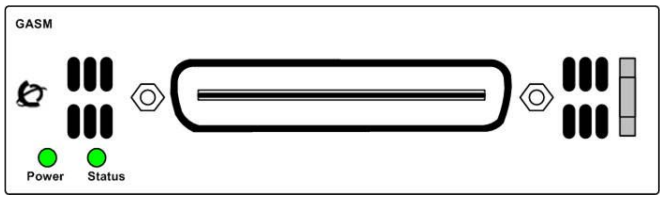

The ringer equivalency number (REN) per port for ASM8 is 1; the REN for ASM8+ and GASM8 is 2.

Note: The termination of the analog interface can consist of any combination of devices, subject only to the requirement that the sum of the RENs of all the devices does not exceed the REN of the interface to which the device is connected.

Table 10 shows the specifications for ATA2, ASM8, ASM8+, GASM8, and global analog station interface (GASI).

Table 10 ATA2, ASM8, ASM8+, GASM, and GASI analog device specifications (Sheet 1 of 2)

Specification	ATA2	ASM8	ASM8+	GASM8	GASI
Ringing frequency (North America)	20 Hz ± 1 Hz	20 Hz ± 1 Hz	20 Hz ±1 Hz	20 Hz ±1 Hz	20 Hz ±1 Hz
Ringing frequency (Europe)	25 Hz ± 1 Hz	25 Hz ± 1 Hz	25 Hz ± 1 Hz	25 Hz ± 1 Hz	25 Hz ± 1 Hz
Ringing voltage (North America)	80 V rms ± 10%	55 V rms ± 10%	65 V rms ± 10%	65 V rms ± 10%	65 V rms ± 10%
Ringing voltage (Europe)	75 V rms +/- 10%	N/A	65 V rms ± 10%	65 V rms ± 10%	65 V rms ± 10%

Table 10 ATA2, ASM8, ASM8+, GASM, and GASI analog device specifications (Sheet 2 of 2)

Specification	ATA2	ASM8	ASM8+	GASM8	GASI
Loop current	20 mA minimum	20 mA minimum	20 mA minimum	20 mA minimum	20 mA minimum
Battery feed voltage	-48 V dc ± 10%	-48 V dc ± 10%	-29 V dc ± 10%	-48 V dc ± 10%	-48 V dc ± 10%
FIC code	OL13ABC	N/A	N/A	N/A	N/A
Ringer equivalency number	3	1	2	2	2
ATA2 to BCM loop resistance (cable only)	135 ohms (800 m of 0.5-mm wire or 2600 ft of 24 AWG wire)	N/A	N/A	N/A	N/A
Analog loop resistance on terminal side for voice applications (cable only)	1300 ohms (7200 m of 0.5-mm wire or 26000 ft of 24 AWG wire)	250 ohms (1538 m of 0.5-mm wire or 5000 ft of 24 AWG wire)	200 ohms (1231 m of 0.5-mm wire or 4000 ft of 24 AWG wire)	200 ohms (1231 m of 0.5-mm wire or 4000 ft of 24 AWG wire)	200 ohms (1231 m of 0.5-mm wire or 4000 ft of 24 AWG wire)
Analog loop resistance on terminal side for data applications (cable only)	200 ohms (1231 m of 0.5-mm wire or 4000 ft of 24 AWG wire)	250 ohms (1538 m of 0.5-mm wire or 5000 ft of 24 AWG wire)	200 ohms (1231 m of 0.5-mm wire or 4000 ft of 24 AWG wire)	200 ohms (1231 m of 0.5-mm wire or 4000 ft of 24 AWG wire)	200 ohms (1231 m of 0.5-mm wire or 4000 ft of 24 AWG wire)
Input impedance at tip and ring	600 ohms	600 ohms	600 ohms	600 ohms	600 ohms
Return loss	> 20 dB for 200 to 3400 Hz (when terminated with 600 ohms)	> 20 dB for 200 to 3400 Hz (when terminated with 600 ohms)	> 20 dB for 200 to 3400 Hz (when terminated with 600 ohms)	> 20 dB for 200 to 3400 Hz (when terminated with 600 ohms)	> 20 dB for 200 to 3400 Hz (when terminated with 600 ohms)
Insertion loss on an internal call	ATA2 to BCM loss 3.0 dB ± 0.5 dB	ATA2 to BCM loss 3.0 dB ± 0.5 dB	ATA2 to BCM loss 3.0 dB ± 0.5 dB	ATA2 to BCM loss 3.0 dB ± 0.5 dB	ATA2 to BCM loss 3.0 dB ± 0.5 dB
Insertion loss on an external call	ATA2 to BCM loss 2.2 dB +/- 1.0 dB; BCM to ATA2 loss 0.5 dB ± 1.0 dB	ASM to BCM loss 3.0 dB +/- 1.0 dB; BCM to ASM loss 0.5 dB ± 1.0 dB	ASM to BCM loss 3.0 dB +/- 1.0 dB; BCM to ASM loss 0.5 dB ± 1.0 dB	ASM to BCM loss 3.0 dB +/- 1.0 dB; BCM to ASM loss 0.5 dB ± 1.0 dB	ASM to BCM loss 3.0 dB +/- 1.0 dB; BCM to ASM loss 0.5 dB ± 1.0 dB
MWI type (see **Note**)	Stutter tone	Stutter tone	Stutter tone/ / Voltage MWI (CO: 120 V)	Stutter tone/ Reverse polarity/ Voltage MWI (CO: 120 V)	Stutter Tone/ Reverse polarity/ Voltage MWI (PBX: 90 V)
Disconnect supervision types	N/A	N/A	OSI EIA/TIA 464 section 4.5.10.2.4/ 4.5.10.2.5.1	OSI EIA/TIA 464 section 4.5.10.2.4/ 4.5.10.2.5.1	N/A
Note: The MWI type depends on the country profile, and the MWI voltage shown is a maximum value.					

Specialized media bay modules (MBMs)

This section describes the MBMs that perform a specific job outside of the trunk and station MBM descriptions (see Table 11).

Table 11 Specialized MBMs

Module type	What it does	Special notes
FEM (see "Fiber expansion media bay module" on page 63)	Connects a maximum of six Norstar expansion units.	The switches on the FEM are used to turn fiber ports on and off. The FEM does not work correctly if you set these switches using the rules used for other MBMs.
DDIM (see "Digital drop and insert MUX" on page 63)	Enables a BCM system to share its connection to a universal T1 network with a LAN.	

Fiber expansion media bay module

The fiber expansion media bay module (FEM) connects a maximum of six Norstar MBMs to the BCM system. These connections provide a quick way to upgrade a Norstar system to a BCM system.

The front bezel of the FEM has six connectors. These connections are made using fiber cables between the FEM module and the Norstar expansion unit.

Figure 34 shows the front of the FEM module. Each enabled port consumes one DS30 bus.

Figure 34 FEM faceplate LEDs and connectors

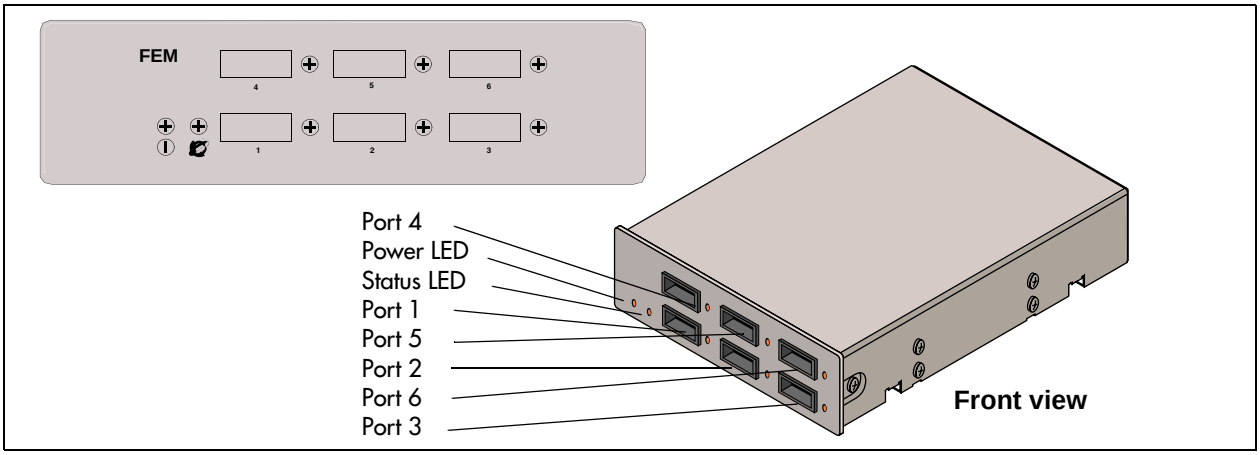

Digital drop and insert MUX

The digital drop and insert MUX media bay module (DDIM) enables a BCM system to share its connection to a universal T1 network with a local area network (LAN) to provide a combination of voice and data channels.

The DDIM:

- provides the functionality of a DTM (T1 digital lines only)
- splits the incoming T1 line so that some of the lines are used for voice traffic and some of the lines are used for data traffic
- provides either the channel service unit (CSU) or data service unit (DSU) functionality to support connections to data terminal equipment (DTE), such as a router or a bridge
- connects to network devices that support V.35 interfaces
- provides end-to-end transparent bit service
- supports loopbacks between the BCM system and the internal BCM components, and between the BCM system and digital terminal equipment

Figure 35 shows the DDIM faceplate LEDs and connectors.

Figure 35 DDIM faceplate LEDs and connectors

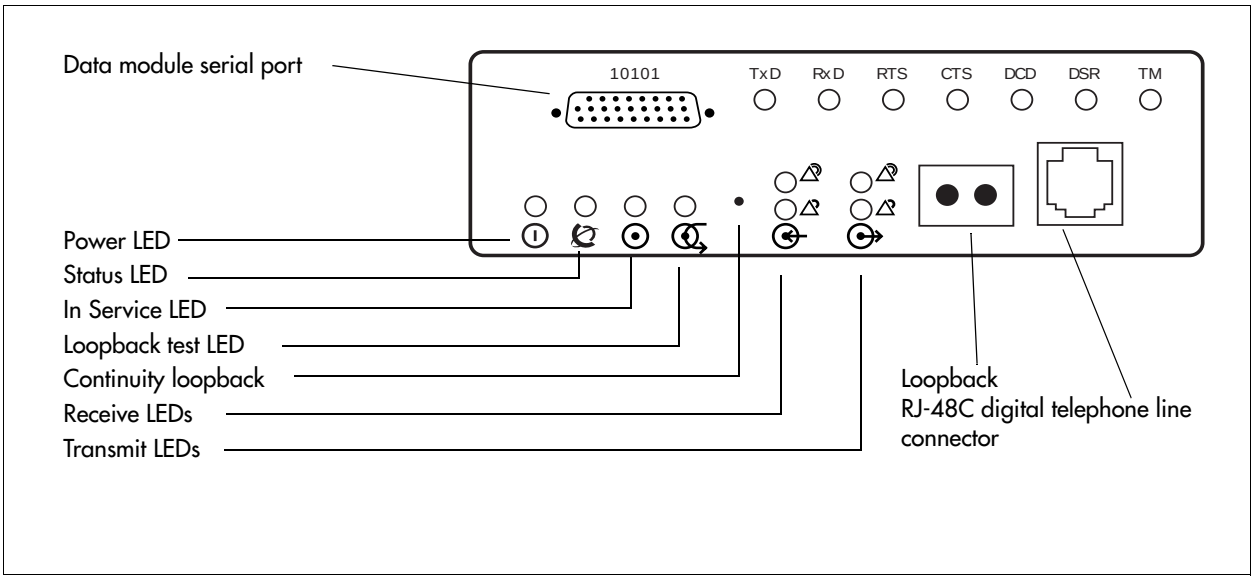

BCM400 expansion gateway

The BCM400 expansion gateway is available in standard and redundant configurations for BCM400 systems only.

The BCM400 expansion gateway kit (North America only) consists of a BCM400 main unit and enough VoIP gateway trunk authorization codes to enable 48 ports of VoIP trunks. The BCM400 expansion gateway, combined with the BCM400 host system, provides a maximum of 192 TDM sets, instead of 160, while communicating to the PSTN through TDM trunks on the expansion gateway. The VoIP trunks connect the two systems and allow the BCM400 expansion gateway to tandem from IP trunks to the PSTN/TDM trunks (see Figure 36 on page 65).

The addition of a second BCM400 expansion gateway provides up to two T1 PSTN trunks. This releases enough system resources on the host BCM400 main unit for the addition of 64 digital telephones.

Figure 36 BCM400 expansion gateway configuration

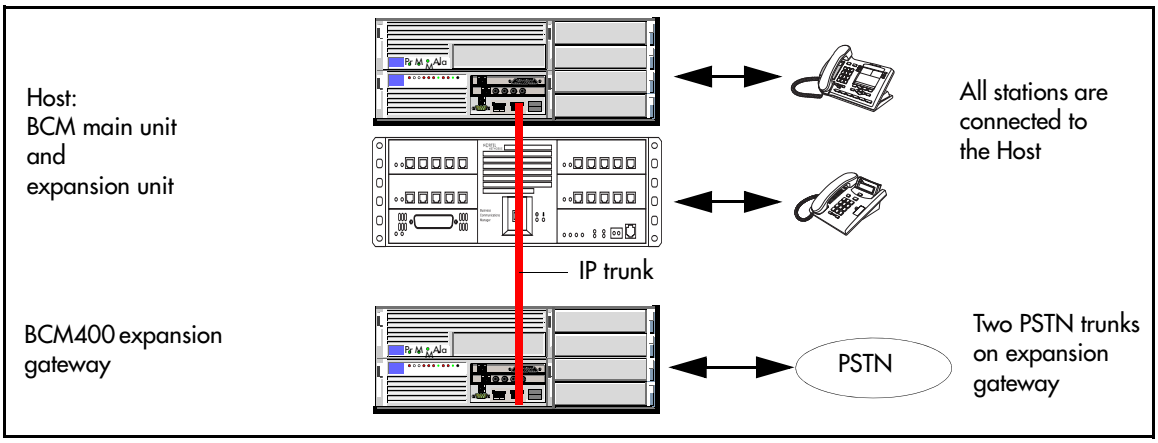

BCM components

Refer to the following sections for descriptions of the BCM components:

- "BCM power supply"
- "BCM400 redundant power supply"
- "Power supply adapter cord (international users)"
- "Uninterruptable power supply"
- "Hard disk"
- "RAID upgrade kit"
- "Cooling fan"

BCM power supply

The BCM200 main unit and the BCM400 main unit (standard) use a switched power supply. Internal cabling routes to the I/O card, media bay backplane, and hard disk. External cabling extends to the line power supply outlet (see Figure 37 and Figure 38).

Figure 37 BCM200 and BCM400 (standard) power supply (rear view)

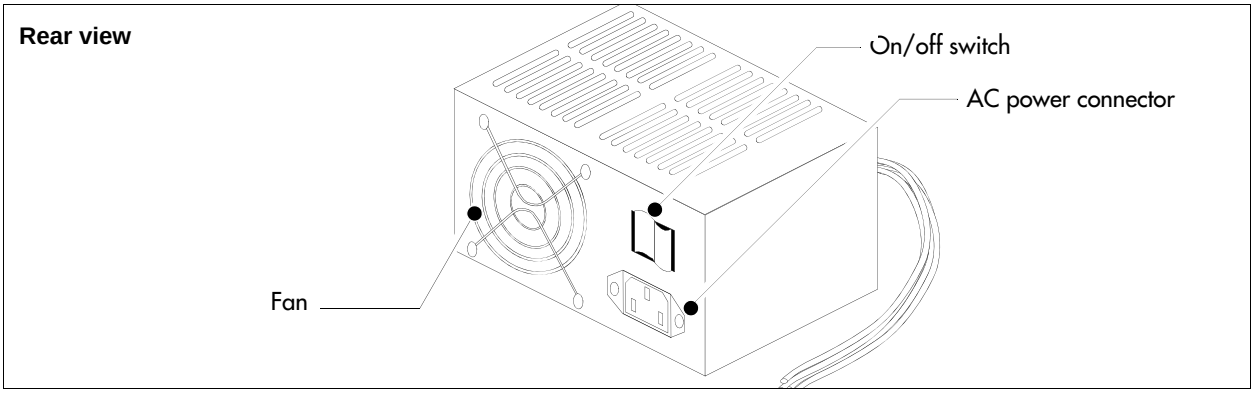

Figure 38 Standard power supply connectors

Connector Configuration for Standard Sparkle Power Supply	New Lengths	Purpose and Notes
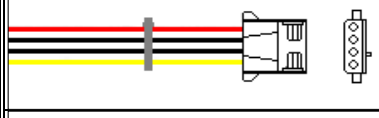	525mm	MBM Back plane
	525mm	MBM Back plane for BCM400, not required for BCM200
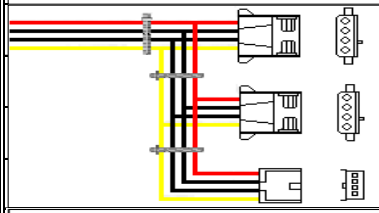	500mm to first, +50mm to next, +100mm to last (total 650mm) tie wrapped every 5cm	Hard disk cage, extra connectors to be tucked under the hard disk
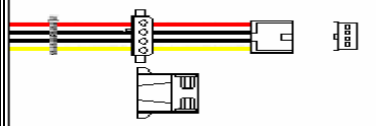	430mm to first (right angle) , +150mm to next (total 580mm)	Reserved for future use
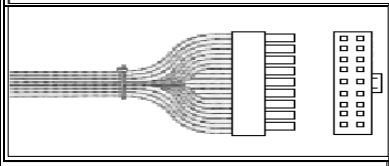	480mm	I/O Card
	480mm	I/O Card

BCM400 redundant power supply

The BCM400 redundant power supply (RPS) is available as a field replaceable unit (FRU) or as part of the BCM400 RFO. The redundant power supply consists of two power supply modules and a power supply unit (see Figure 39 and Figure 40). The power supply modules are interchangeable and can be exchanged one at a time during power-on conditions.

Figure 39 BCM400 redundant power supply and modules

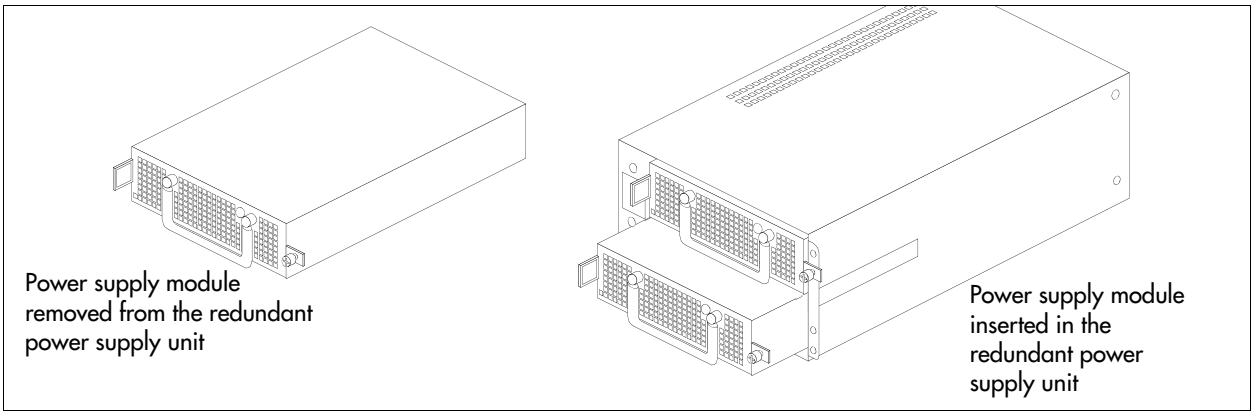

Figure 40 BCM400 redundant power supply connectors

Connector Configuration for Redundant Sparkle Power Supply	Cable Lengths and Markings	Purpose and Notes
	550mm (P2)	Route to Media bay backplane 1: Tie any slack at the connector (behind the MBM).
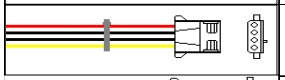	550mm (P3)	Route to Media bay backplane 2: Tie any slack at the connector (behind the MBM).
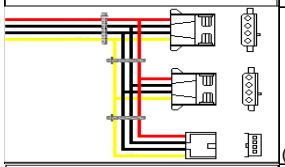	325mm to first (P4), +50mm to next (P5), +100mm to last (P6) (total 475mm)	To hard disk: Tie any slack at the power supply. Tuck any loose connectors under the hard disk cage.
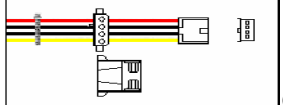	340mm to first (P7)(right angle) , +150mm to next (P8) (total 490mm)	Unused. Tie to the center of the hard disk cage.
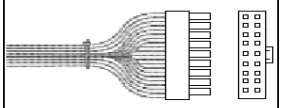	515mm (P1)	Route to the I/O card.
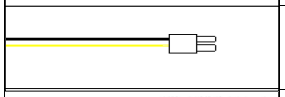	515mm (P9)	Route to the I/O card.
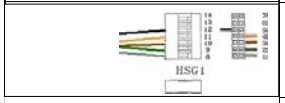	515mm (PA)	Route to the I/O card.
	300mm (PB)	Unused

In addition, international (non-North American) users require a power supply adapter cord for each main unit and expansion unit.

Power supply adapter cord (international users)

The power supply adapter cord is for international (non-North American) BCM users. It connects to the power supply on one end and to the (C-14) BCM power bar on the other end.

You require one power supply adapter cord for each power supply you want to connect to the power bar.

Uninterruptable power supply

An uninterruptable power supply (UPS) is an optional device that maintains continuous operation during power interruption or failure conditions. The UPS provides power source monitoring and battery backup activation so that critical BCM functionality is maintained.

In a power failure situation, the UPS provides sufficient time to either correct the problem or activate a contingency plan to sustain services. The UPS is configured to perform a graceful shutdown of the BCM 2 minutes before the UPS battery power is drained.

The BCM system supports American Power Conversion (APC) UPS devices that use a USB control interface. These include the APC UPS-Smart family (for example, UPS-Smart 750, UPS-Smart 1000) and UPS-Back family (for example, UPS-Back 500 ES, UPS-Back 350 ES). The UPS control software enables the configuration of various operational settings.

Note: For the UPS to function correctly, connect the UPS before the BCM system is powered up. If you connect a UPS to a running system, the UPS will not function.

In BCM 4.0 the serial interface is not supported for UPS connectivity. Only the USB interface supports UPS connectivity.

On BCM systems with more than one unit, the power supplies for all of the units must be connected to a single UPS.

The UPS feature is supported in all markets (110~120V and 220~240V power standards).

Hard disk

The BCM200 main unit and the BCM400 main unit (standard) contain a single hard disk and hard disk bracket (see Figure 41 and Figure 42).

Figure 41 BCM200 main unit hard disk and bracket

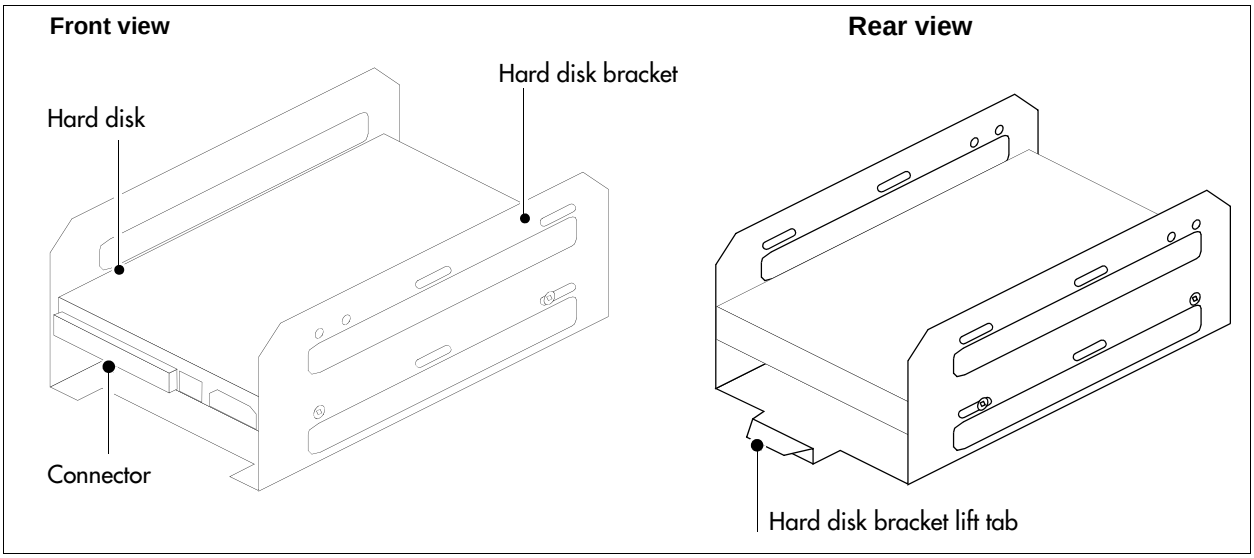

Figure 42 BCM400 main unit hard disk and bracket

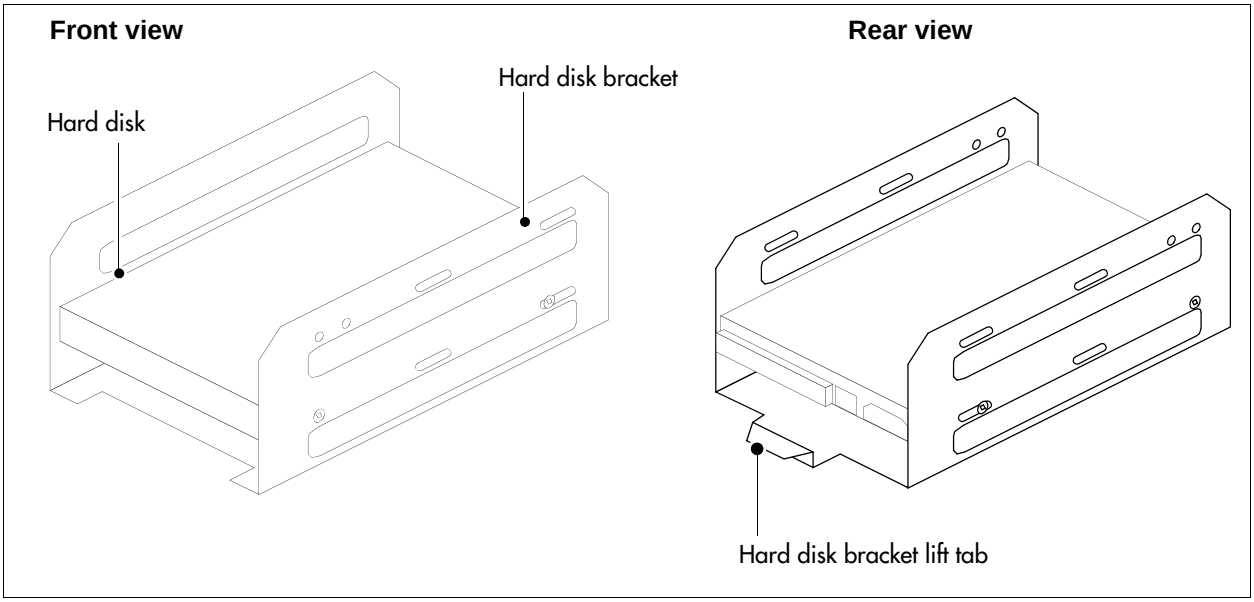

RAID upgrade kit

The BCM200 main unit and the BCM400 main unit (standard) can contain a redundant array of independent disks (RAID). The RAID upgrade kits have a single hard disk (mirror) and RAID controller card. Use your current hard disk (from the single disk system) as the primary hard disk. When the RAID upgrade is installed, the data from the primary hard disk is written to the mirror hard disk. The dual hard disk configuration provides one-fault tolerance capability.

The RAID card has three ribbon cable connectors. The hard disk connectors are mounted on the right and left sides of the RAID controller card. The third ribbon cable connection, mounted at the rear of the card, connects to the primary IDE connector on the I/O card (see Figure 43).

Figure 43 RAID upgrade kit (BCM400 main unit standard installation shown)

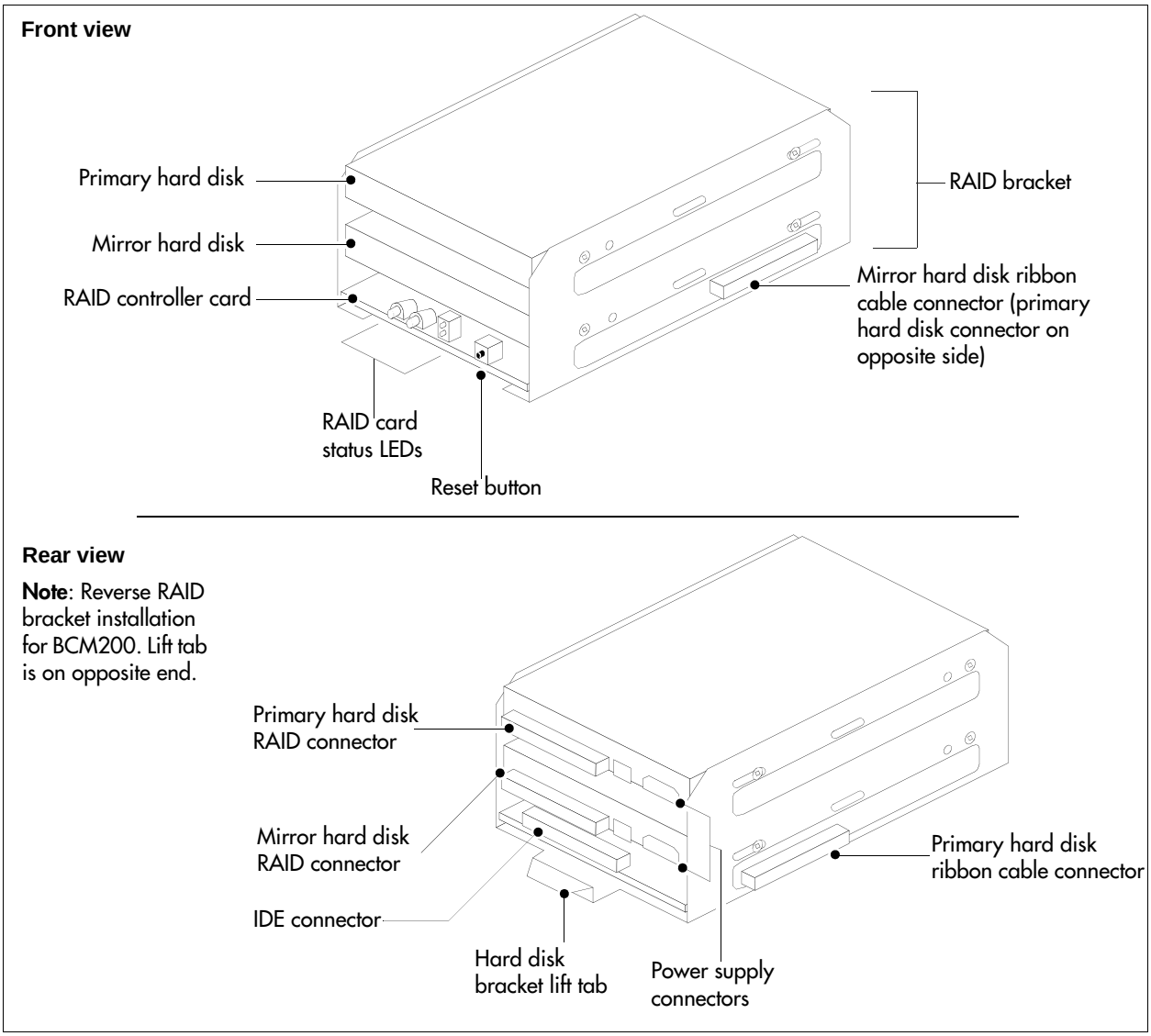

Cooling fan

The BCM200 main unit and BCM400 main unit (standard) have a single cooling fan, while the BCM400 main unit RFO configuration has two fans. Figure 44 illustrates a cooling fan and connectors.

The cooling fan mounts in the back of the BCM200 main unit. The cooling fans mount on a removable panel in the back of the BCM400 main unit.

Figure 44 Cooling fan

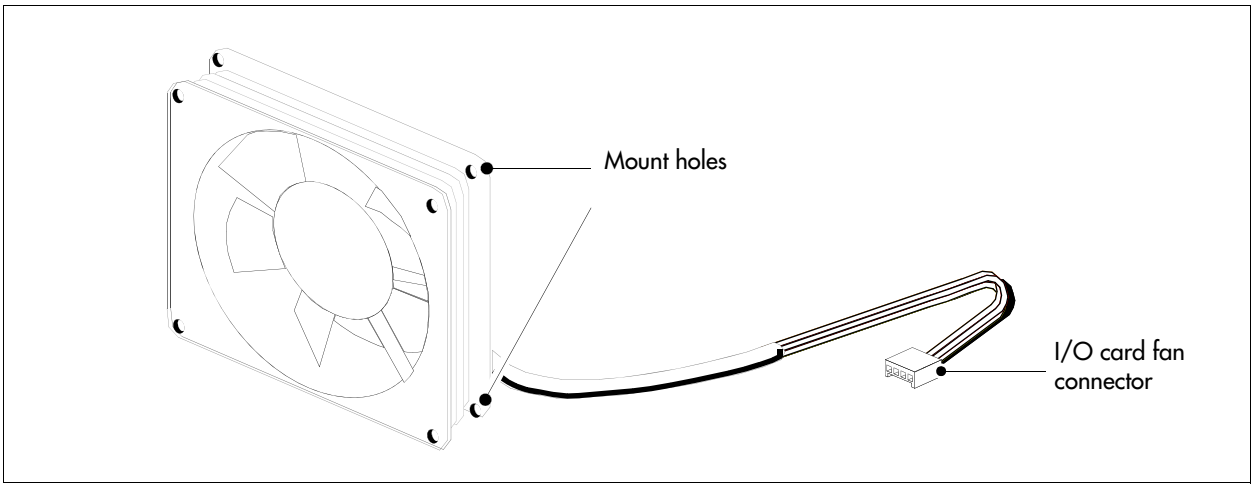

Field replaceable units (FRU)

Use Table 12 to Table 17 as a reference when you need to order, replace, or install component hardware. The tables provide references to the component description and installation procedures.

Note: The product engineering code can change over time; consult the catalog for the latest information.

Table 12 Card field replaceable units

Component description	FRU description	Installation procedure
Modem card	"Modem card" on page 50	"To install a modem card" on page 311
Media services card	"Media services card (MSC)" on page 43	"To install the media services card (MSC)" on page 308
Media services PEC III	"MSC IP call processing hardware" on page 45	"To install a PEC" on page 317
WAN interface card with CSU/V.35 (North America only)	"WAN interface card" on page 48	"Installing the WAN card" on page 304
Dual V.35 WAN interface card	"WAN interface card" on page 48	"Installing the WAN card" on page 304
WAN interface card with CSU/V.35/ X.21 (International only)	"WAN interface card" on page 48	"Installing the WAN card" on page 304
256MB memory module	"Main card" on page 45	"To install a DIMM card" on page 320

Table 13 Chassis field replaceable units

Component description	FRU description	Installation procedure
Base function tray	"Base function tray component hardware" on page 41	"To install the base function tray" on page 238
Wall-mount kit	N/A	"Installing the main unit on the wall" on page 98
BCM field redundancy upgrade kit	"BCM400 main unit" on page 36	"Upgrading to a redundant power supply" on page 288 "Replacing the hard disk" on page 255 "Replacing or installing a cooling fan" on page 325

Table 14 Hard drive field replaceable units

Component description	FRU description	Installation procedure
BCM hard disk, programmed (20GB)	"Hard disk" on page 68	"Replacing the hard disk" on page 255
BCM RAID upgrade kit	"RAID upgrade kit" on page 69	"Replacing the hard disk" on page 255
BCM replacement blank hard drive	"Hard disk" on page 68	"Replacing the hard disk" on page 255

Table 15 Power supply field replaceable units

Component description	FRU description	Installation procedure
BCM uninterruptable power supply	"BCM power supply" on page 65	"Replacing a standard power supply" on page 277
BCM400 redundant power supply module (single)	"BCM400 redundant power supply" on page 66	"Upgrading to a redundant power supply" on page 288

Table 16 Cooling fan field replaceable units

Component description	FRU description	Installation procedure
BCM400 cooling fan (4-wire base unit)	"Cooling fan" on page 70	"Installing a BCM400 cooling fan" on page 328
BCM expansion unit cooling fan	"Cooling fan" on page 70	"Installing an expansion unit fan" on page 336
BCM200 cooling fan	"Cooling fan" on page 70	"Installing the BCM200 cooling fan" on page 333

Table 17 MBM

Component description	FRU description	Installation procedure
MBM bay filler blanking plate	"MBM bays and backplane" on page 52	"Installing a media bay module (MBM)" on page 107
DTM MBM	"Digital trunk media bay module" on page 56	"Installing a media bay module (MBM)" on page 107
CTM4 CLID trunk MBM	"Caller ID trunk media bay module" on page 57	"Installing a media bay module (MBM)" on page 107
CTM8 CLID MBM	"Caller ID trunk media bay module" on page 57	"Installing a media bay module (MBM)" on page 107
BRI S/T MBM	"Basic rate interface media bay module" on page 57	"Installing a media bay module (MBM)" on page 107
DSM16(+) MBM	"Digital station media bay module" on page 59	"Installing a media bay module (MBM)" on page 107
DSM32(+) MBM	"Digital station media bay module" on page 59	"Installing a media bay module (MBM)" on page 107
4x16 MBM	"4x16 media bay module" on page 60	"Installing a media bay module (MBM)" on page 107
ASM8+ MBM	"Analog station media bay modules" on page 60	"Installing a media bay module (MBM)" on page 107
GASM8 MBM	"Analog station media bay modules" on page 60	"Installing a media bay module (MBM)" on page 107
FEM MBM	"Fiber expansion media bay module" on page 63	"Installing a media bay module (MBM)" on page 107
DDIM MBM	"Digital drop and insert MUX" on page 63	"Installing a media bay module (MBM)" on page 107
GATM MBM	"Global analog trunk media bay module" on page 58	"Installing a media bay module (MBM)" on page 107

Telephones and adapters

The following telephones and devices can be used with the BCM system:

Digital Phone 7100 — one-line display, one memory button without indicator.

Digital Phone 7000 (not shown) (International only) — four memory buttons, without display or indicators.

Digital Phone 7208 — one-line display, eight memory buttons with indicators.

Digital Phone 7316 — two-line display, three display buttons, 16 memory buttons with indicators, eight memory buttons without indicators. Supports a separate mute key and a headset key under the dialpad.

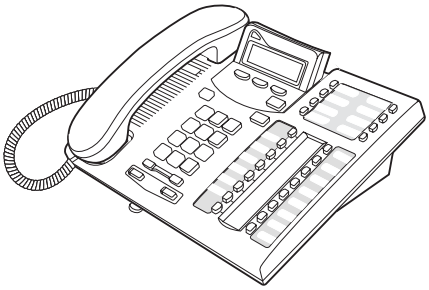

Digital Phone 7316E — two-line display, three display buttons, 16 memory buttons with indicators, eight memory buttons without indicators. Handsfree, mute, and headset buttons are located under the dialpad. The default button assignment for the 7316E is different from the 7316.

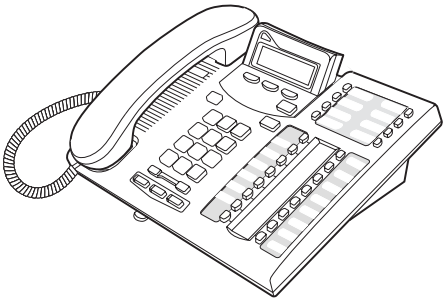

Digital Phone 7316E + Key Indicator Module (KIM) — all the features of the 7316E plus 24 extra memory buttons with indicators, per KIM. Can be configured as an enhanced central answering position (CAP) that supports line and Hunt group appearances (the eKIMs), or as an ordinary KIM that only supports memory button programming (the OKIMs). Supports a maximum of four eKIMs and up to nine OKIMS.

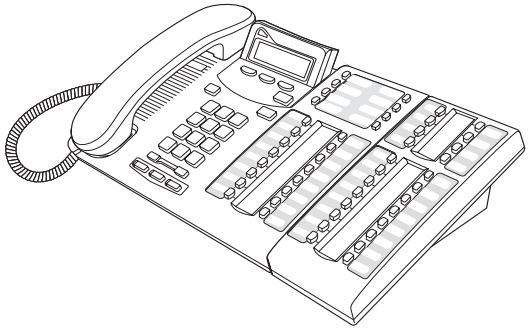

Digital Phone 7406 cordless telephone system — provides cordless mobility in a small office environment. Each base station supports three telephones. Function is based on the 7316 telephone. The base station connects to a DSM on the system.

Provides six memory buttons with indicators and a two-line display with three display buttons.

For installation instructions, refer to the *T7406 Cordless Telephone Installation Guide*.

IP Phone 1120E (not shown) — The Nortel IP Phone 1120E brings voice and data to the desktop by connecting directly to a Local Area Network (LAN) through an Ethernet connection.

The IP Phone 1120E has a graphical, high-resolution LCD display, backlit, with adjustable contrast. It also has four user defined feature keys and four soft keys.

IP Phone 1140E — The Nortel IP Phone 1140E brings voice and data to the desktop by connecting directly to a Local Area Network (LAN) through an Ethernet connection.

The IP Phone 1140E has a graphical, high-resolution LCD display, backlit, with adjustable contrast. It also has six user defined feature keys and four soft keys.

IP Phone 2001 (not shown) — connects through an IP link to the BCM system. It has a single-line text display with a row of display keys on the second display line. The IP Phone 2001 can be used to call through any type of BCM line.

IP Phone 2002 (not shown) — connects through an IP link to the BCM system. It has a two-line text display with a row of display keys on the third display line, and four memory keys with indicators. The IP Phone 2002 can be used to call through any type of BCM line.

IP Phone 2004 — connects through an IP link to the BCM system. It has a six-line text display with a row of display keys on the eighth display line, and six memory keys with indicators. The IP Phone 2004 can be used to call through any type of BCM line.

IP Phone 2007 (not shown) — connects to a LAN through an Ethernet connection. The IP Phone 2007 supports call processing features, and can work with an External Application Server to display web-based and interactive applications on the large, color LCD touch screen.

i2050 software phone (not shown) — installs on a customer PC to provide Voice over IP (VoIP) services using a telephony server and your company's local area network (LAN).

Nortel IP Audio Conferencing Unit (ACU) 2033 — provides audio conferencing. The keypad provides many of the set features of the basic Business Series telephones without display or memory buttons. The audio conference phone comes with three microphones. Installation instructions are provided with the audio conference phone.

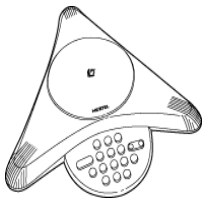

Wireless LAN handsets 2210, 2211, and 2212 — Provides telephony access over the LAN or WAN through an 802.11-compatible access point. An SVP server provides communication between the handsets and the BCM IP functions. These handsets emulate the function of the IP Phone 2004. They have a three-line truncated display, with display keys. There are no navigation keys, so core-system features requiring navigation are not supported. There are no line keys, but the telephone uses a line key menu on which lines, intercom keys, and button features can be programmed.

Refer to the *WLAN IP Telephony Installation and Configuration Guide* for details.

Digital mobility system — Provides mobile coverage for your office. The handsets communicate through a stationary base station, which is wired to a digital mobility controller (DMC). In turn, the DMC is wired to a digital module on the BCM200 main unit, the BCM400 main unit, or the BCM expansion unit. Depending on the mobility configuration, you can have up to 64 sets assigned to your system. These handsets have a two-line display with display keys that allow user interaction with system prompts. Otherwise, their function emulates the 7100 digital phones.

Refer to the *Nortel Digital Mobility System Installation and Configuration Guide* for details.

Note: Nortel provides limited support for legacy Norstar telephones.

Accessories

The following accessories can be used with the BCM system:

Station auxiliary power supply (SAPS) — provides power for the OKIMs when the 7316E is connected to five or more KIMs. It can also be used to extend the loop length between a telephone or terminal and the BCM system from 1000 to 2600 feet. You must use a dedicated cable to connect the two locations.

Analog Terminal Adapter 2 (ATA2) — converts digital signals to analog signals to allow communication with analog devices, such as fax machines, modems, and answering machines. The ATA2 supports a maximum transmission rate of 28.8 kbit/s. With a single-line telephone, the ATA2 supports a long-loop configuration.

Chapter 3
Viewing the BCM system LEDs

Refer to the following sections for information on the BCM system LEDs:

- "Base function tray system status display LEDs"
- "Media bay module LEDs" on page 81

Base function tray system status display LEDs

A line of 10 LEDs displays on the base function tray faceplate of the BCM main unit (see Figure 45 and Table 18). The LEDs show the current state of various hardware components. Element Manager contains a monitoring tool that allows you to determine the current condition of the LEDs from your computer.

Figure 45 BCM base function tray system status LEDs

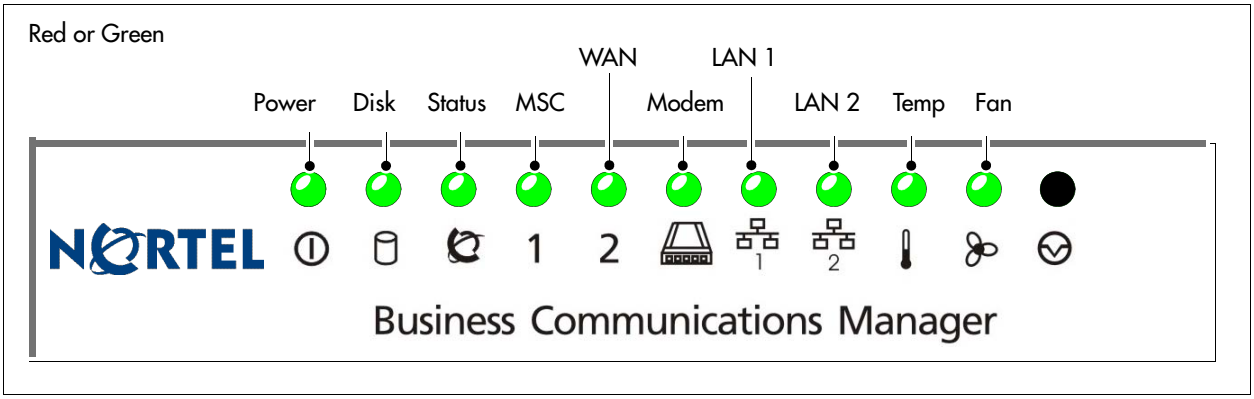

Table 18 summarizes the possible operating states of the LEDs on the front of the base function tray. The BCM expansion unit has both a power and a status LED, which provide the same indicators as for the base function tray.

Table 18 Base function tray system status LED states (Sheet 1 of 3)

LED	Description	LED states
Power	Indicates the status of all power components. The Power LED is used with the Status LED to show startup conditions (see Table 19). An LED that monitors a component will also show a fault in combination with the Power LED.	Green ON – normal operation Red ON – an excessive voltage deficiency or a component failure (such as a redundant power supply module)
Disk	Indicates access to the system hard disk.	Green ON – hard disk activity detected This LED lights when the HDD is accessed. If the systems does not need to read or write to the HDD the LED is off.

Table 18 Base function tray system status LED states (Sheet 2 of 3)

LED	Description	LED states
Status	Indicates the system status. Six non-blinking LEDs in the center indicate monitoring software is not active.	Green ON – all monitored services are functioning Green FLASH – failure in one or more telephony services Green OFF – not all services are working
MSC	PCI Device/MSC	Green ON – device is present and operating properly Green FLASH – driver is not running Green OFF – device is defective or not present
WAN	PCI Device/WAN1 + WAN2	Green ON – device is present and operating properly Green FLASH – driver is not running Green OFF – device is defective or not present
Modem	PCI Device/Modem	Green ON – device is present and operating properly Green FLASH – driver is not running Green OFF – device is defective or not present
LAN 1	PCI Device/LAN 1	Green ON – device is present and operating properly Green FLASH – driver is not running Green OFF – device is defective or not present
LAN 2	PCI Device/LAN 2	Green ON – device is present and operating properly Green FLASH – driver is not running Green OFF – device is defective or not present

Table 18 Base function tray system status LED states (Sheet 3 of 3)

LED	Description	LED states
Temp	Monitors the main unit and CPU temperature.	Green ON – normal Red ON – sensor is non-operational or temperature is out of range. **Note**: Red LED indicates a possible fan failure.
Fan	Monitors the status of the fans.	Green ON – all installed fans are working Red ON – sensor failure or there is a problem with at least one fan

During system startup, the power LED and the status LED indicate the status of the system. Table 19 describes the various states of the Power and Status LEDs, and the corresponding alarm conditions during system startup.

Table 19 Power and Status LED states and descriptions during system startup

Power LED	Status LED	Description
Solid Green	Solid Green	Non alarm condition - Normal operation
Solid Red	Solid Green	Alarm condition - Normal operation
Solid Green	Off	Alarm condition - Startup profile
Solid Red	Off	LED state 5 Alarm 10906: System Startup - Operating system and alarm subsystem available
Solid Red	Blinking Green	LED state 6 Alarm 10907: System Startup - Telephony and voice mail active
Solid Green	Blinking Green	LED state 7 Alarm 10908: System Startup - Element Manager is available
Solid Green	Solid Green	LED state 8 Alarm 10909: System Startup - Startup complete. Service Manager and Scheduling Services available

Media bay module LEDs

The two media bay module (MBM) LEDs show the power and status of the MBM. Figure 46 shows the location of the ⏻ (Power) and ⟲ (Status) LEDs on an MBM. The power and status LEDs are located in the same place on all MBMs.

Figure 46 MBM LEDs

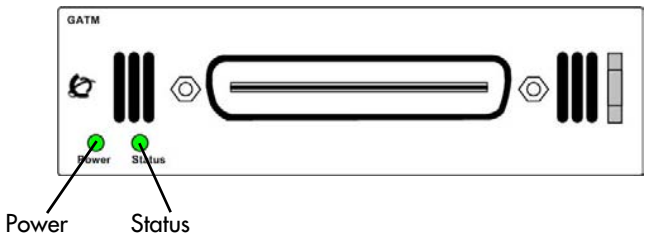

Table 20 describes the possible MBM LED states.

Table 20 MBM LED descriptions

Power	Status	Description
Off	Off	The MBM does not have power, or there is a failure of the MBM power converter.
On	Off	BCM to expansion unit failure or system initialization.
On	Blinking	Hardware is working, but there is an operational problem such as: • no link to main unit is detected • frame alignment is lost on messages from the main unit • bandwidth not allocated • MBM is in maintenance state • MBM is in download state (GASM, GATM4/GATM8)
Blinking	Blinking	The MBM has power, but there is a hardware problem such as: • partial failure of power converter • thermal overload • fan failure
On	On	The MBM is ready to operate.

The following MBMs have additional LEDs:

- "DTM LEDs" on page 82
- "BRIM LEDs" on page 84

DTM LEDs

The DTM has additional LEDs that are not on most other MBMs. Figure 47 shows the location of the DTM LEDs.

Figure 47 DTM LEDs

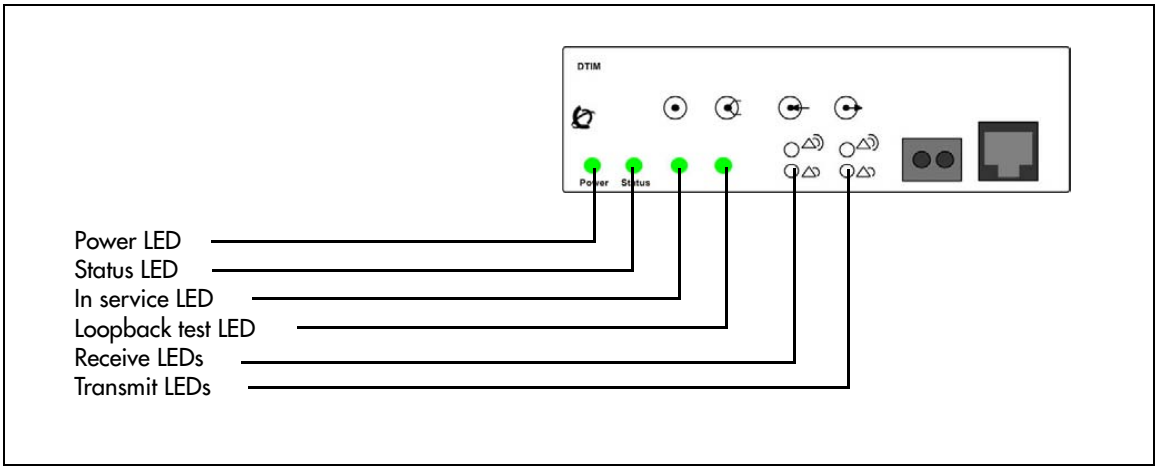

Table 21 describes the functions of the DTM LEDs.

Table 21 DTM LED functions

LED	Status	Descriptions
Power	–	Refer to "Media bay module LEDs" for details.
Status	–	Refer to "Media bay module LEDs" for details.
In service	Flashing	The T1, ETSI, or PRI trunks are out of service because a loopback test is running or the DTM is initializing.
Loopback test	On	A continuity loopback test is running.
Receive alarm	On	A problem with the received digital transmission. This half-duplex link does not work.
Receive error	On	A small error as a result of degraded digital transmission. Possible causes are an ohmic connection, water ingress, or too long a loop.
Transmit alarm	On	The DTM cannot transmit. The DTM sends an alarm indication signal (AIS) to the terminating switch. This half-duplex link does not work.
Transmit error	On	The DTM is sending a remote alarm indication (RAI) carrier failure alarm (CFA) to the terminating switch. If the transmit alarm is not on, this error indicates a far-end or cable problem.
All LEDs	Flashing	The DTM is initializing.

Tip: You can install a maximum of three DTM modules in the BCM main unit, depending on the available buses.

BRIM LEDs

The BRIM has one additional LED beside each RJ-48C jack. Figure 48 shows the location of the LEDs on a BRIM.

Figure 48 BRIM LEDs

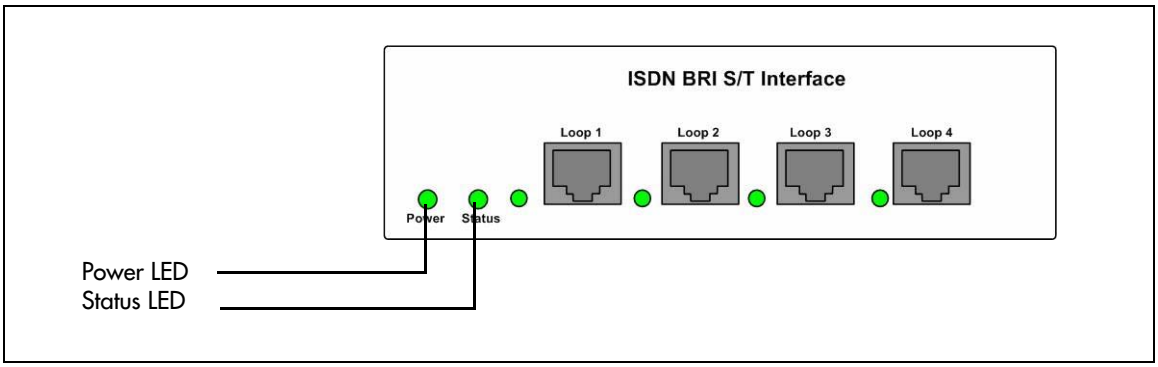

Table 22 describes the functions of the BRIM LEDs.

Table 22 BRIM LED functions

LED	Status	Descriptions
Power	–	Refer to “Media bay module LEDs” for details.
Status	–	Refer to “Media bay module LEDs” for details.
ISDN line	ON	The ISDN line associated with the LED is active.

Chapter 4
Installation overview

To install a BCM system, you install a BCM main unit, a BCM expansion unit (optional), and the telephony components. Figure 49 and Table 23 provide an overview of the installation process.

Figure 49 BCM system installation overview

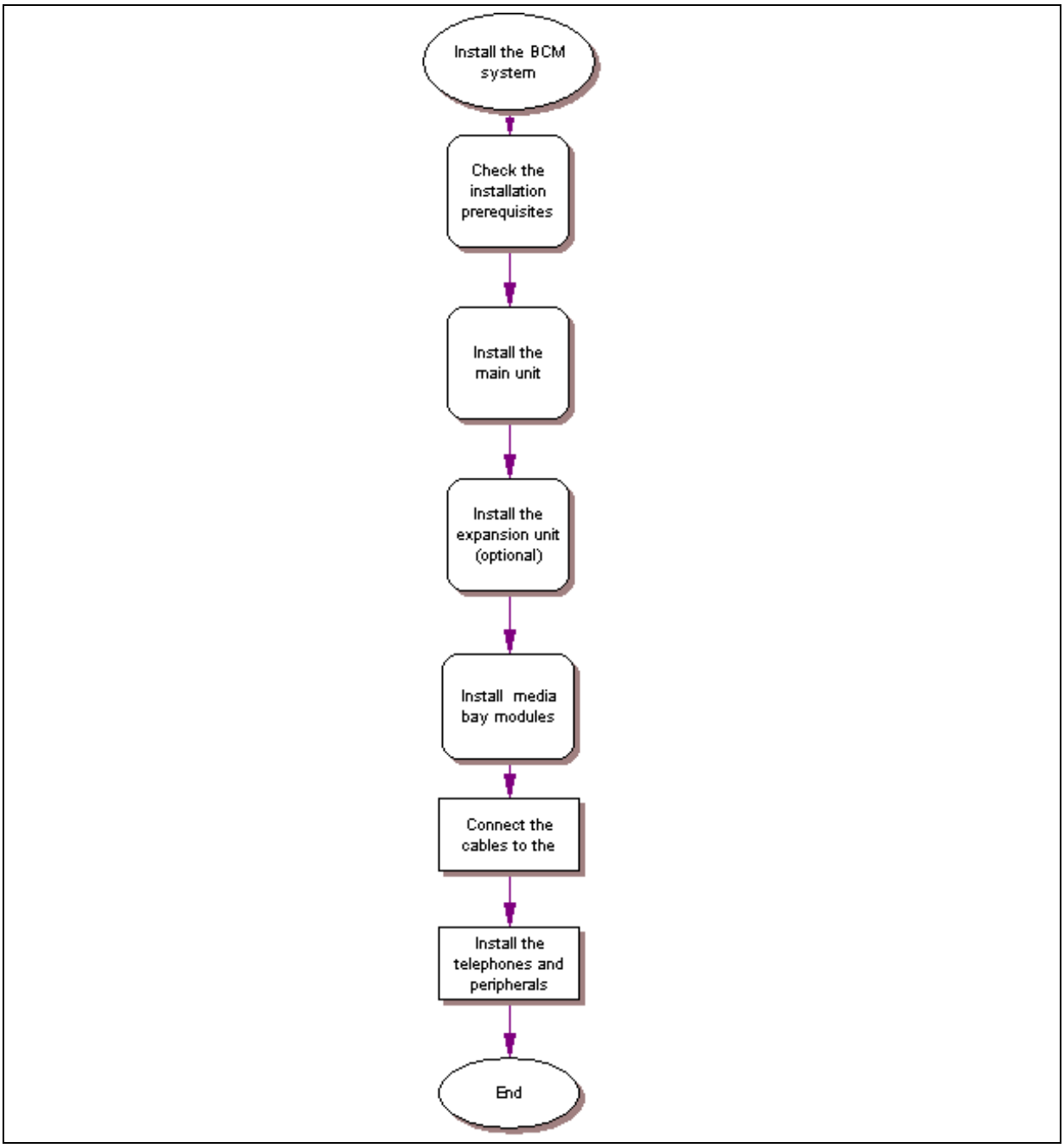

Table 23 BCM system installation overview (Sheet 1 of 2)

Tasks	Description	Link to
Prepare for installation	Verify these requirements: • environmental • electrical • site telephony wiring	"Checking the installation prerequisites" on page 89
Get required equipment and tools	Ensure you have these items: • basic hardware • optional equipment • other hardware and tools	"System equipment, supplies, and tools" on page 91
Check required prerequisites	Verify environmental, electrical, and general requirements.	"Checking the installation prerequisites" on page 89
Install the main unit	Mount the main unit using these options: • in an equipment rack with a rack-mount shelf • on a wall with a wall-mount bracket • on a desktop	"Installing the BCM main unit" on page 93
Install an expansion unit (optional)	Mount the expansion unit using the same options as the main unit: • in an equipment rack with a rack-mount shelf • on a wall with a wall-mount bracket • on a desktop	"Installing the expansion unit" on page 104
Install a media bay module (MBM)	Follow these steps to install an MBM: • set the MBM DIP switches • insert the MBM into the main unit or expansion unit	"Installing a media bay module (MBM)" on page 107
Connect the cables	Connect the cables between these items: • power supply to units • lines and extensions to the MBMs • data networking hardware	"Connecting the cables" on page 139
Install telephones and peripherals	These telephones can be installed: • System telephones • Emergency telephone • IP Phones • T7406 cordless system	"Installing telephones and peripherals" on page 163
Install an ATA2	Perform the steps to install an ATA2: • connect the ATA2 • mount the ATA2 • test insertion loss measurement • configure the ATA2	"Installing the analog terminal adapter" on page 169
Install optional telephony equipment	Perform the steps to install: • auxiliary ringer • external paging system • external music source	"Installing optional telephony equipment" on page 175

Table 23 BCM system installation overview (Sheet 2 of 2)

Tasks	Description	Link to
Initialize the system	Begin the configuring process for your system.	"Initializing the system" on page 179
Set up the system and set configuration	Perform the basic system configuration using Element Manager, Startup Profile, or Telset Administration.	"Configuring the BCM system" on page 185

Chapter 5
Checking the installation prerequisites

Refer to the following sections for information on BCM system installation prerequisites:

- "General requirements"
- "Environmental requirements"
- "Electrical requirements"
- "Site telephony wiring requirements" on page 90
- "System equipment, supplies, and tools" on page 91

General requirements

Before you install the BCM main unit or expansion unit, complete the following actions:

- Determine the location for the BCM main unit (or expansion unit), telephones, and other equipment based on spacing and electrical requirements.
- Order the required trunks from the central office.
- Ensure that you have all the equipment and supplies you need to install the system.

Environmental requirements

Ensure you meet the installation environmental requirements. The installation area must be:

- a minimum of 4 m (13 ft.) from equipment such as photocopiers, electrical motors, and other equipment that produces electromagnetic, radio frequency, and electrostatic interference
- within 1.5 m (5 ft.) of a three-wire grounded electrical outlet
- clean, free of traffic and excess dust, dry, and well ventilated
- within the temperature ranges of 10°C and 40°C (50°F and 104°F)
- between 20% and 80% non-condensing relative humidity
- structurally strong enough and with enough space to support the BCM units
- a minimum of 46 cm (18 in.) from the floor

Note: The installation area must be of sufficient height from the floor to prevent water damage.

Electrical requirements

Ensure you meet the following electrical requirements:

- Power must be supplied from a non-switched, unobstructed outlet within 1.5 m (5 ft.) of the BCM units.
- The supplied power must be 100/240 V AC, 50/60 Hz, and 10 A minimum service with a third-wire safety ground. The third-wire safety ground provides shock protection and prevents electromagnetic interference.

Danger: Risk of electric shock

The safety of this product requires connection to an outlet with a third-wire ground. Use only with the supplied BCM power supply and a three-wire power outlet.

Caution: Check ground connections

Ensure that the electrical ground connections of the power utility, telephone lines, and internal metal water pipe system, if present, are connected together. If these ground connections are not connected together, contact the appropriate electrical inspection authority. Do not try to make the connections yourself.

- You can connect the power supply to a power bar. The total length of the power cables from the power supply to the electrical outlet (including power bar) should not exceed 2 m (6.5 ft.). You must use a power bar approved by an appropriate National Test Body, with a third-wire ground. Nortel recommends not to use an extension cord between the power supply and the power bar, or between the power bar and the electrical outlet.

Site telephony wiring requirements

This section describes the requirements for wiring digital telephony devices (digital loop) and analog telephony devices (analog loop) to the BCM system.

Refer to the following sections for information on the parameters for digital and analog loops:

- “Digital loop”
- “Analog loop” on page 91

Digital loop

The following parameters must be met for a digital loop:

- one, two, or three twisted-pair cables per telephone
- DC loop resistance of less than 64 Ω
- cable length (0.5 mm or 24 AWG) less than 300 m (975 ft.)

- use of a station auxiliary power supply (SAPS) for loops 300 m (975 ft.) to 1200 m (3900 ft.). In North America, the SAPS must be a CSA- or UL-approved Class 2 power source. In Europe, the SAPS must be a Class II power source and CE marked.
- no bridge taps

Analog loop

The following parameters must be met for an analog loop:

- maximum DC loop resistance of 208 Ω
- maximum cable length (0.5 mm or 24 AWG) of 1220 m (4000 ft.)

System equipment, supplies, and tools

Refer to the following sections for the equipment required to install the BCM system:

- "Basic hardware"
- "Optional equipment"
- "Other hardware and tools" on page 92

Basic hardware

The BCM system consists of some combination of the following hardware:

- main unit
- expansion unit
- media bay module (MBM)
- telephones
- cabling for connections between hardware units

Note: You must include specific features in the keycode file for some hardware to function.

Optional equipment

You can add the following equipment to the BCM system to support specific requirements beyond the basic hardware:

- station auxiliary power supply (SAPS)
- key indicator module (KIM) for T7316E telephones
- analog terminal adapter 2 (ATA2) if connecting analog equipment to a digital extension line
- uninterruptable power supply (UPS)
- analog emergency telephone
- optional WAN card field replaceable unit (FRU)

- digital mobility controller (DMC), base stations, repeaters, and digital mobility phones
- Wireless LAN handsets, SVP and TFTP servers, and access points

Countries outside of North America must order separately a power cord that conforms to their specific requirements or standards. All North American main unit and expansion units are equipped with a North American power cord.

Other hardware and tools

You need the following equipment to install a BCM unit:

- mounting hardware (either a rack-mount bracket, a wall-mount bracket per unit, or four rubber feet per unit)
- Phillips screwdriver #2
- flat-blade screwdriver
- pliers
- antistatic grounding strap
- punch-down tool
- surge protector (recommended)
- cables, 25-pair cable with right-feeding female RJ-21 connectors
- 3.5-mm mono audio jack (for external music source)

Chapter 6
Installing the BCM main unit

This section describes how to install the BCM main unit. You can install the main unit in an equipment rack, on a wall, or on a desktop.

Figure 50 shows the steps required to install the main unit.

Figure 50 Overview of installing the main unit

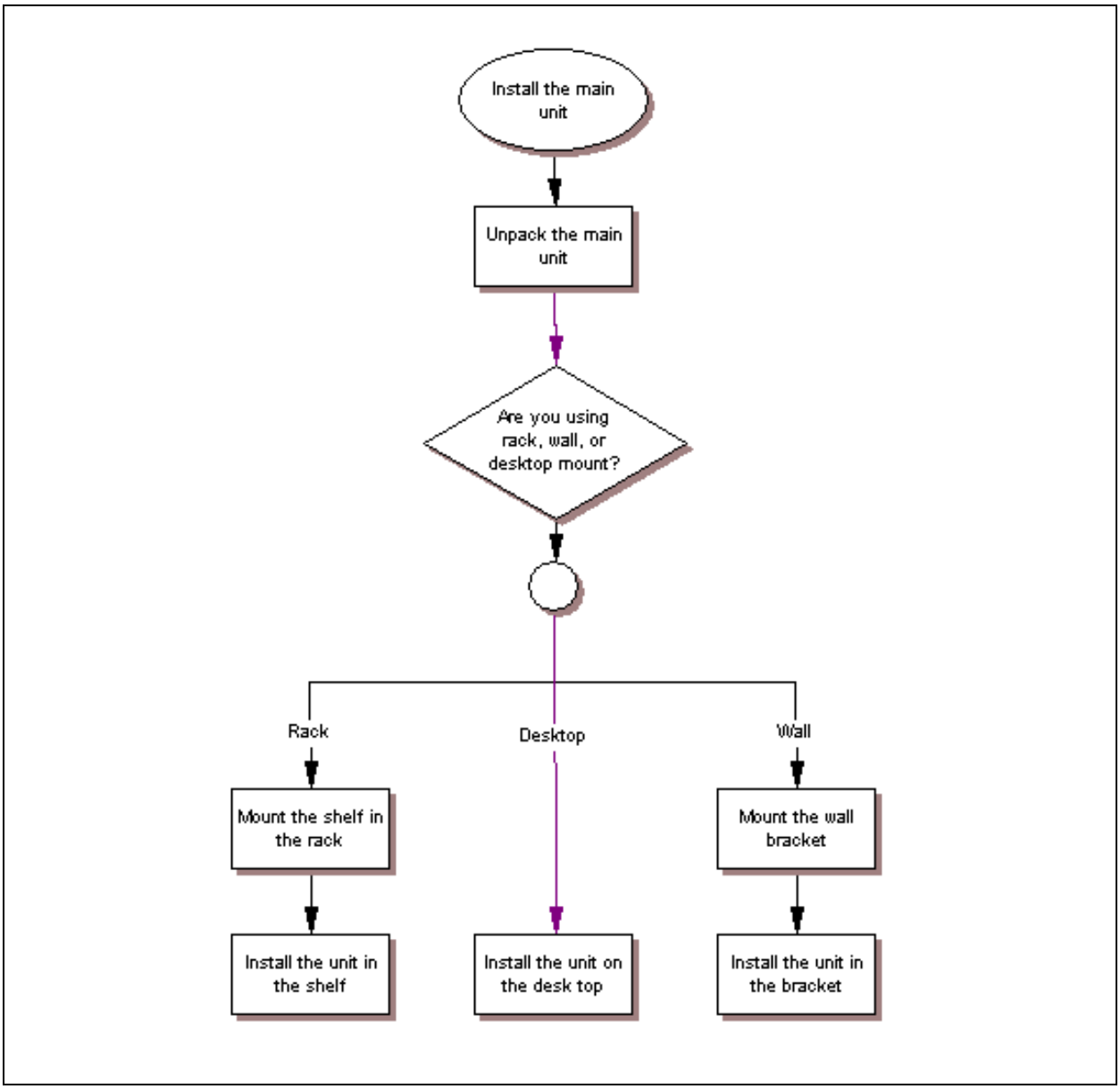

Refer to the following sections for information on installing the main unit:

- "Unpacking the main unit"
- "Installing the main unit in an equipment rack" on page 94
- "Installing the main unit on the wall" on page 98
- "Installing the main unit on a flat surface" on page 100

Unpacking the main unit

Open the main unit box and check that you have all of the components listed below:

- one main unit
- one power supply cable
- four rubber feet
- one set of rack-mount brackets
- a documentation CD
- the *BCM 4.0 Installation Checklist and Quick Start Guide*

Visually inspect the components for any damage that may have occurred during shipping. If you find any damage, contact your Nortel sales representative.

Note: You must supply cable management tools or techniques depending on the type of BCM system installation.

Installing the main unit in an equipment rack

You can install a BCM main unit in a standard 19-inch equipment rack along with your other networking and telecommunications equipment. The BCM expansion unit installs in a similar manner to the main units.

Caution: When installing the main unit in a rack, do not stack units directly on top of one another in the rack.

Fasten each unit to the rack with the appropriate mounting brackets. Mounting brackets cannot support multiple units.

For desk-mount installations, do not place anything directly on top of the BCM main unit.

Refer to "Environmental requirements" on page 89 for acceptable environmental conditions before selecting a location for the BCM main unit.

Use the following procedures to install a BCM unit in a rack:

- "To attach the rack-mount brackets" on page 95
- "To mount the main unit in an equipment rack" on page 96

To attach the rack-mount brackets

1 Place the BCM main unit on a flat, clean surface.

2 Align the screw holes between the BCM main unit and the right rack-mount bracket.

3 Fasten the bracket to the BCM main unit using four screws.

Caution: Use only the screws supplied with the rack-mount bracket. Do not replace the screws. Other screws can damage the unit.

4 Align the screw holes between the BCM main unit and the left rack-mount bracket.

5 Fasten the bracket to the main unit using four screws. Refer to Figure 51, Figure 52, or Figure 53.

Note: Rack-mount bracket

The expansion unit rack-mount bracket has an additional set of holes that allows you to install the brackets so that the expansion unit sits flush with the BCM main unit in an equipment rack.

Figure 51 Attach the rack-mount bracket to the BCM200 main unit

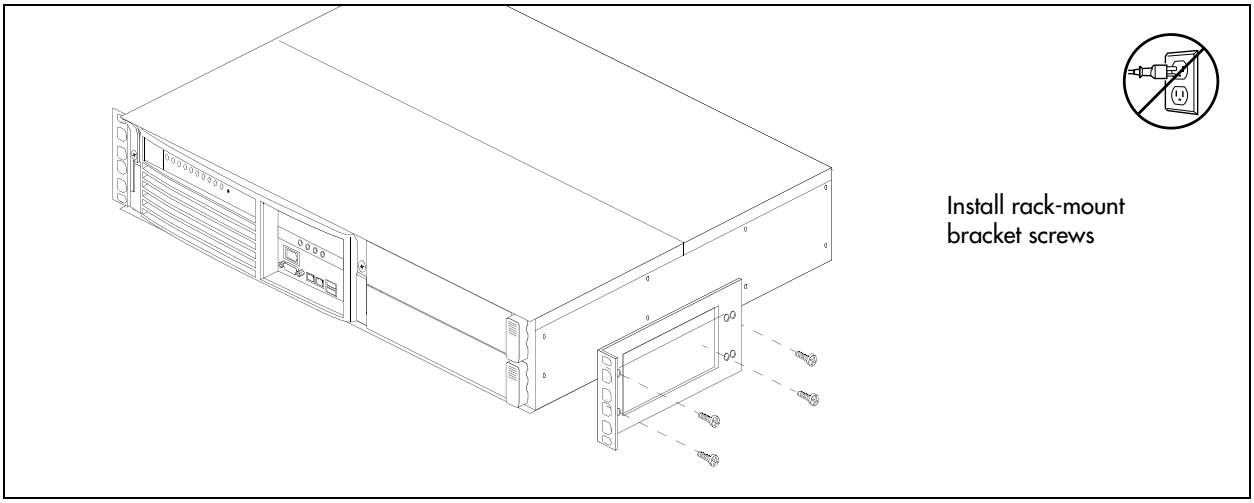

Figure 52 Attach the rack-mount bracket to the BCM400 main unit

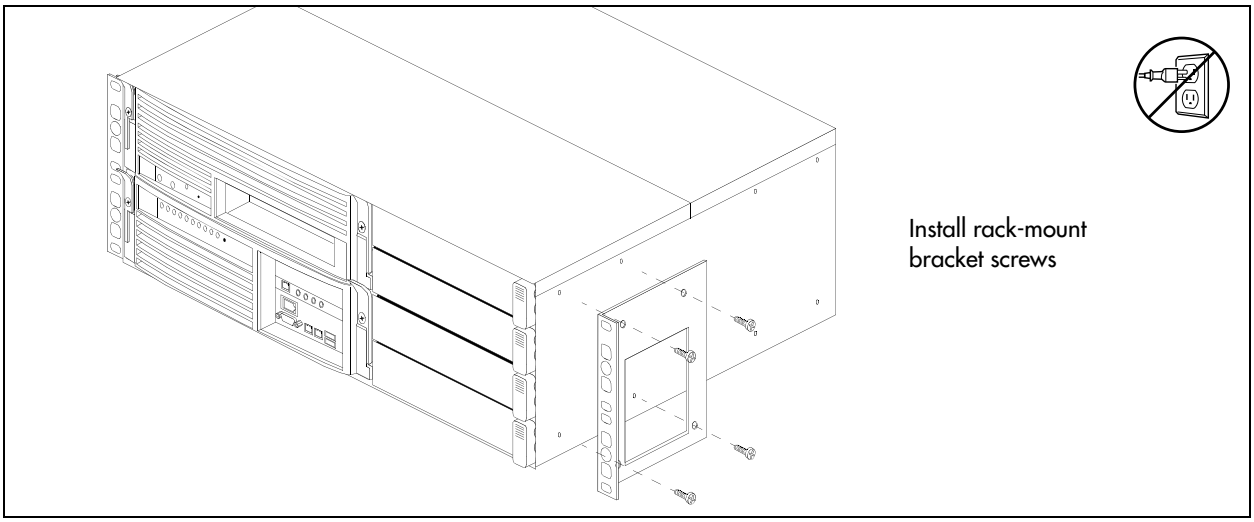

Figure 53 Attach the mounting bracket to the expansion unit

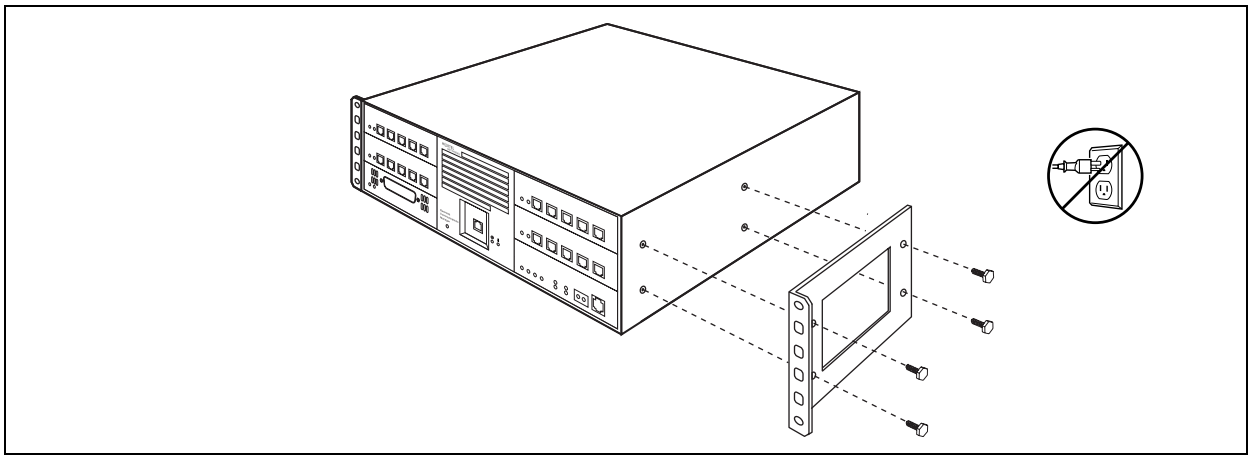

To mount the main unit in an equipment rack

1. Determine the location in the rack where you want to install the main unit.
2. Position the main unit in the rack. Have an assistant hold the main unit.
3. Align the holes in the rack-mount bracket with the holes in the equipment rack rails.
4. Fasten the rack-mount brackets to the rack using the four supplied screws (see Figure 54, Figure 55, or Figure 56).

Figure 54 Fasten the BCM200 main unit to an equipment rack

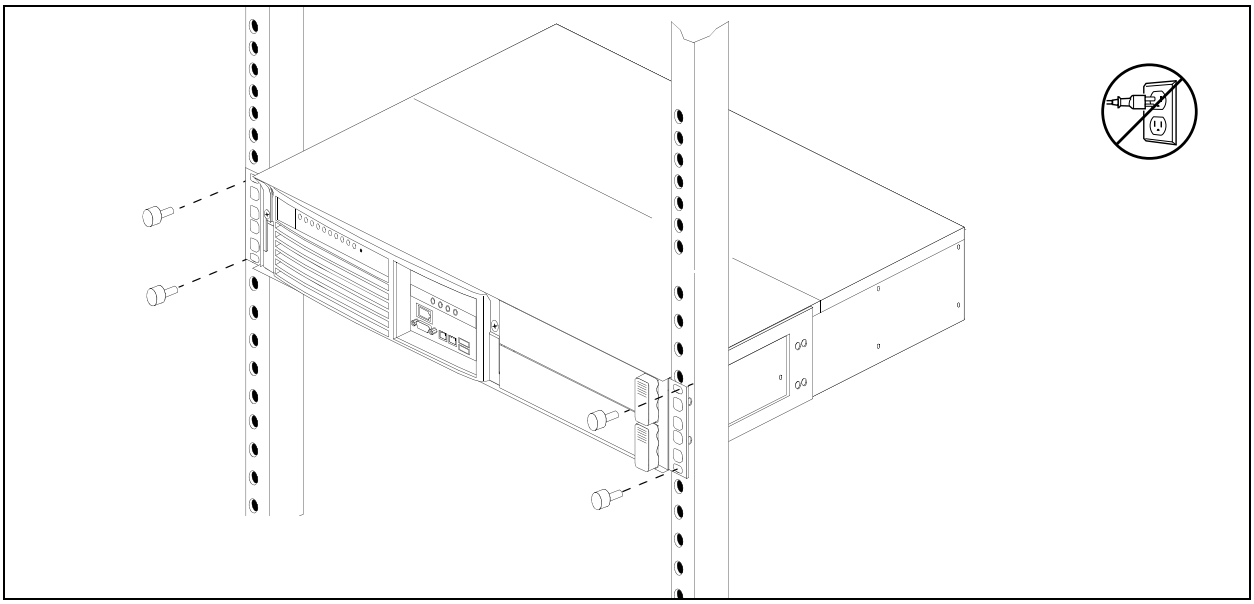

Figure 55 Fasten the BCM400 main unit to an equipment rack

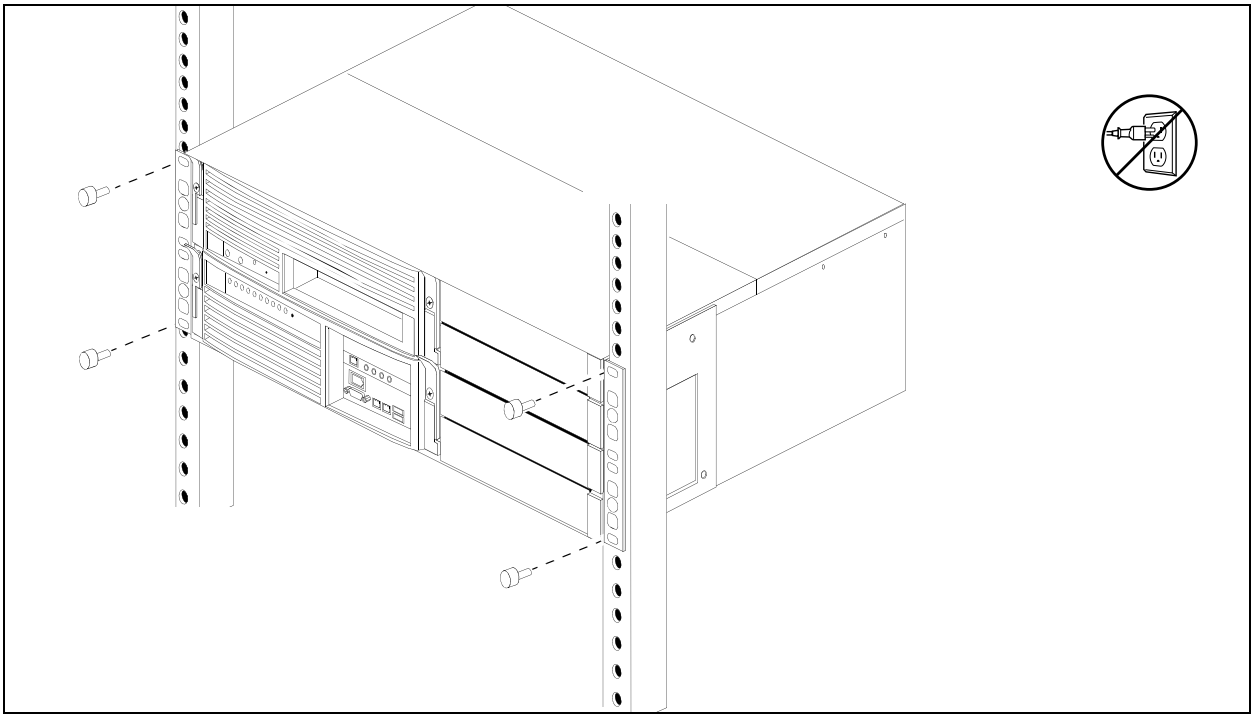

Figure 56 Fasten the expansion unit to the equipment rack

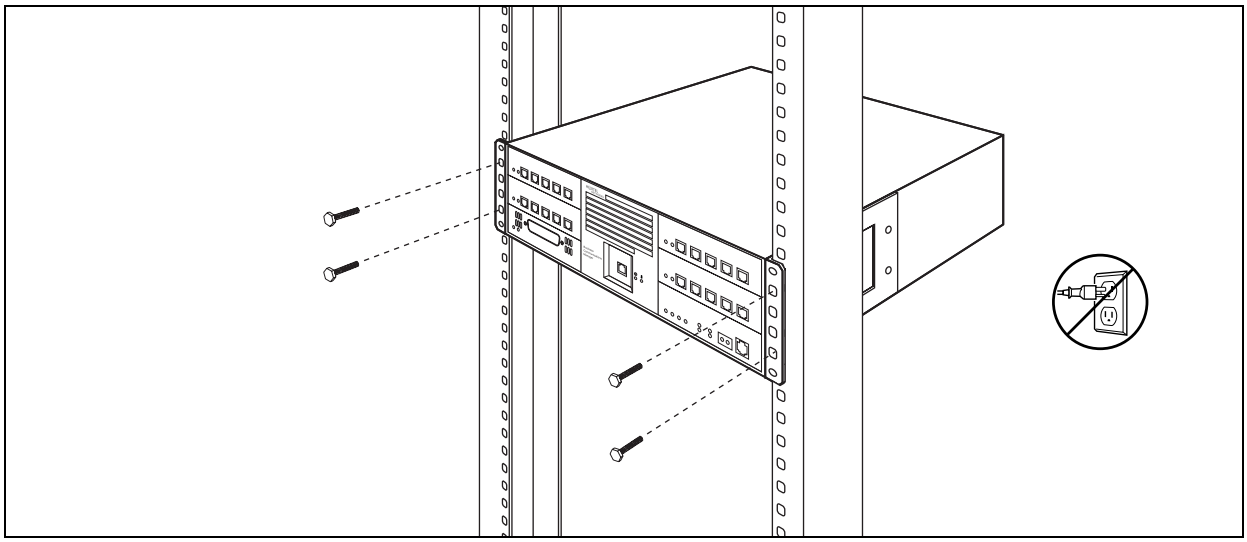

Installing the main unit on the wall

This procedure describes how to mount the BCM200 or BCM400 main unit to a wall.

To mount the main unit on the wall, you need:

- a wall-mount bracket kit NTAB3422
- four #10 x 2.5 cm (#10 x 1 in.) round-head wood screws
- a plywood backboard 2 cm (3/4 in.) thick

To mount the expansion unit on the wall, you need:

- a wall-mount bracket (supplied with the unit)
- two #10 x 2.5 cm (#10 x 1 in.) round-head wood screws
- a plywood backboard 2 cm (3/4 in.) thick

Caution: Refer to "Environmental requirements" on page 89 for acceptable environmental conditions before selecting a location for the BCM main unit.

Note: Nortel does not recommended use of the rack-mount brackets for wall-mount applications.

To install the main unit on the wall

1 Mark the location of the plywood backboard on the wall using a pencil. Use a ruler and bubble-level to check that the plywood backboard is level with respect to the wall.

2 Mount the plywood backboard securely to the wall.

Note: If the backboard for the BCM main unit has enough room for the expansion unit, you do not require a second backboard.

3 Choose a location on the backboard that is level and leaves enough space on the sides (23 cm or 9 in.) to insert and remove the media bay modules (MBMs).

4 Mark the location of the wall-mount bracket holes on the plywood backboard.

- **a** Use the wall-mount bracket as a template.
- **b** Use a bubble-level to check that the wall-mount bracket is level with respect to the plywood backboard.

5 Install four #10 x 2.5 cm (#10 x 1 in.) round-head wood screws in the backboard.

- **a** Do not tighten the screw heads against the backboard. Leave approximately 0.5 cm (0.25 in.) of the screw exposed from the backboard.
- **b** Perform a trial installation of the wall-mount bracket on the plywood backboard. Ensure the wood screw heads seat in the wall-mount bracket slots. If the wood screws are too tight, loosen until the screw heads fit fully in the slots.
- **c** Ensure that the wall-mount bracket is level with respect to the plywood backboard.
- **d** Remove the wall-mount bracket.

6 Align the screw holes on one side of the BCM main unit with the wall-mount bracket.

Note: The bracket suspends the BCM main unit on the wall. Consider the direction you want the media bay modules to face, left or right, when you choose the side on which to install the bracket.

7 Fasten the wall-mount brackets securely to the BCM main unit using the screws provided. Refer to Figure 57 or Figure 58.

Caution: Use only the screws supplied with the wall-mount bracket kit (NTAB3422). Do not replace the screws. Other screws can damage the unit.

Figure 57 Attach the wall-mount brackets to the BCM200 main unit

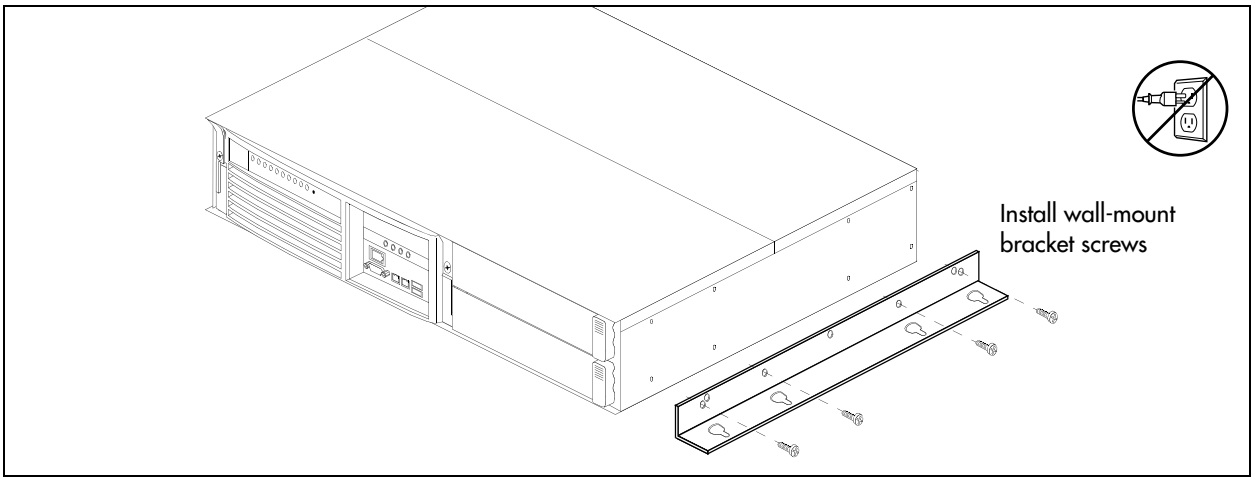

Figure 58 Attach the wall-mount brackets to the BCM400 main unit

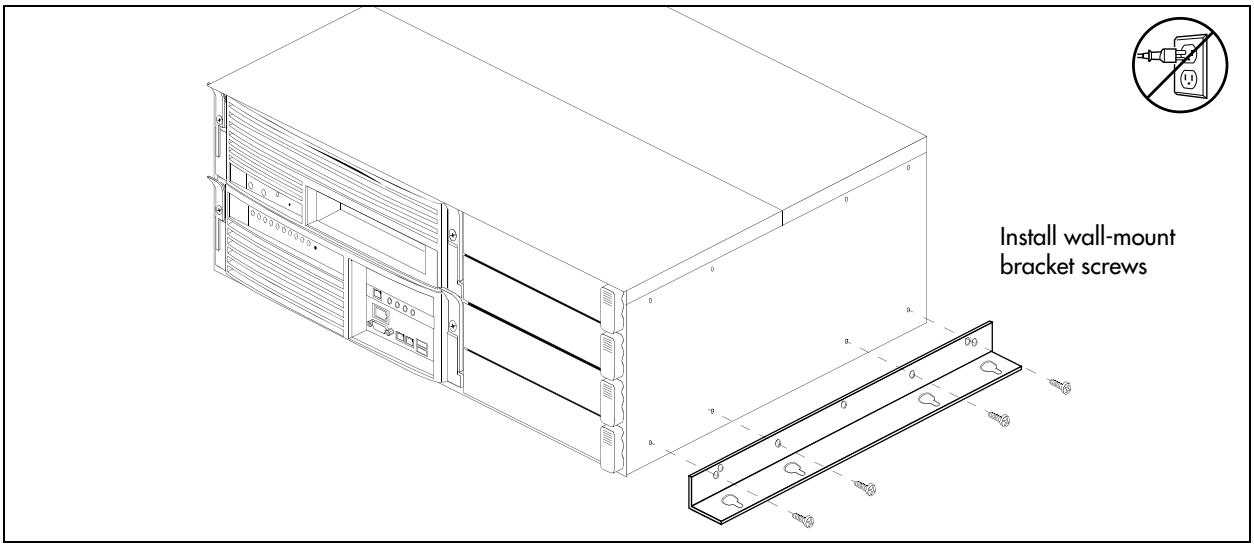

8 Hang the BCM main unit on the backboard screws. Make sure the main unit is level. Ensure the wood screw heads seat fully into the wall-mount bracket slots.

9 Tighten the wood screws against the wall-mount bracket.

Installing the main unit on a flat surface

Use this procedure to install the BCM main unit on any flat surface that can safely support the weight of the unit.

Caution: Refer to "Environmental requirements" on page 89 for acceptable environmental conditions before selecting a location for the BCM main unit.

Caution: Do not place anything directly on top of the BCM main unit or expansion unit.

To install the BCM main unit on a table or shelf

1. Attach four rubber feet to the corners on the bottom of the main unit.
2. Position the main unit on the table or shelf.
3. Make sure you leave enough space around the unit for ventilation and access to the cables and media bay modules.

Next step

If you are installing an expansion unit, proceed to "Installing an expansion unit" on page 103. Otherwise, proceed to "Installing a media bay module (MBM)" on page 107.

Chapter 7
Installing an expansion unit

Adding an expansion unit increases the capacity of your BCM system by providing a method of adding media bay modules (MBMs). Each MBM you add increases the number of public switched telephone network (PSTN) trunks or extensions that you can connect to the BCM system.

Figure 59 shows the steps required to install the expansion unit.

Figure 59 Overview of installing a expansion unit

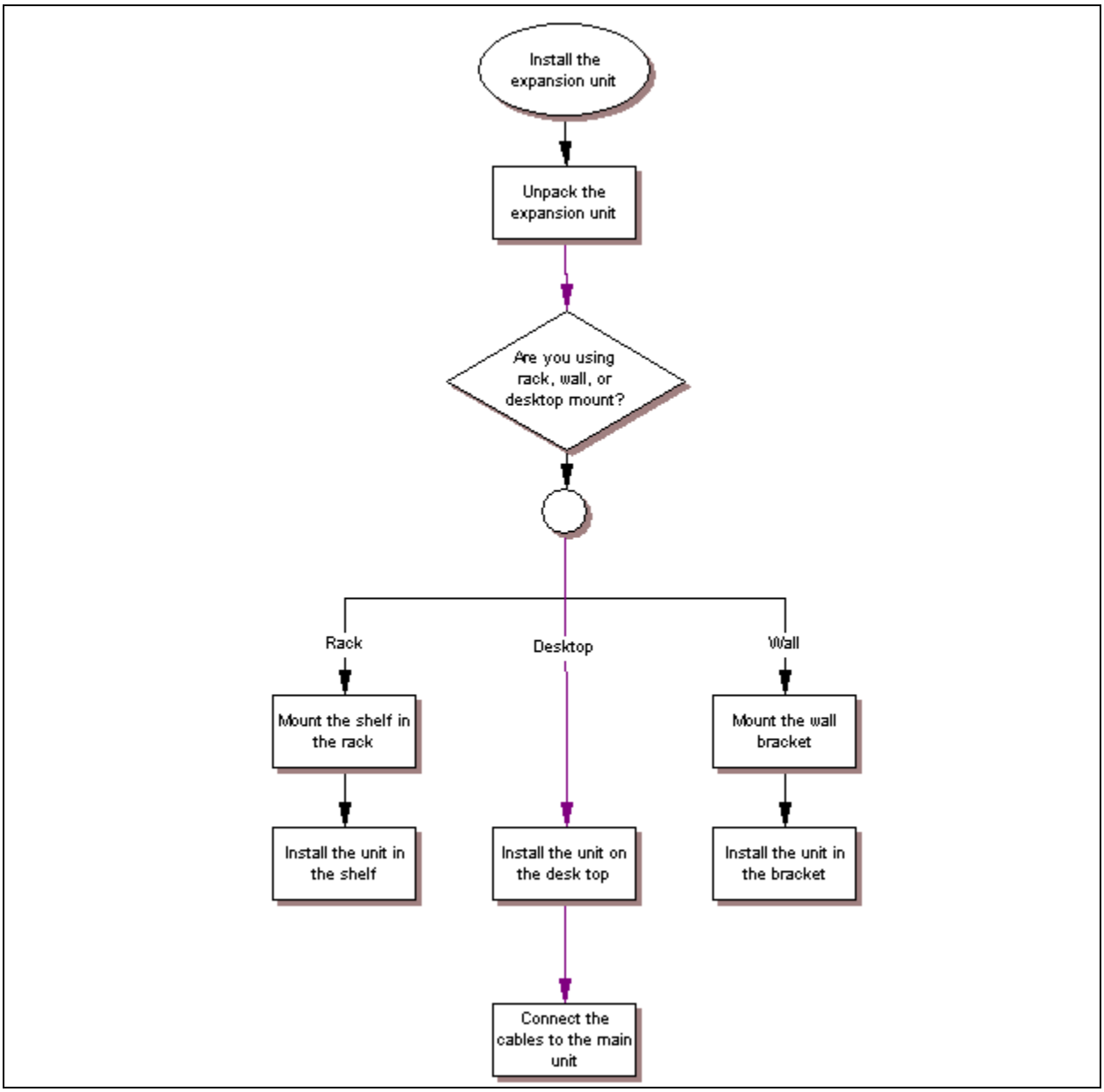

Refer to the following sections for information on installing an expansion unit:

- "Unpacking the expansion unit"
- "Installing the expansion unit" on page 104
- "Connecting the BCM expansion unit to the BCM main unit" on page 105

Unpacking the expansion unit

Open the expansion unit box and remove all the components. Check that you have the following components:

- one BCM expansion unit
- one power supply cable
- one expansion cable (shielded Ethernet cable)
- four rubber feet

Visually inspect the components for any damage that may have occurred during shipping. If you find any damage, contact your Nortel representative.

Warning: Make sure the power supply to the expansion unit is disconnected before inserting or removing an MBM.

Installing the expansion unit

This section describes how to install the BCM expansion unit.

Make sure that the expansion unit is installed close enough to the main unit so that the supplied 5 m (16 ft) expansion cable can be connected between the expansion unit and main unit. The expansion unit has the same environmental and electrical requirements as the main unit. For more information about these requirements, refer to "Checking the installation prerequisites" on page 89.

The expansion unit can be mounted in a rack, on a wall, or on a desktop. Typically, the expansion unit is mounted in the same way as the main unit.

The expansion unit is similar in design to the main unit, therefore, it is installed in the same manner as the main unit. Refer to the following sections for procedures on mounting an expansion unit:

- "Installing the main unit in an equipment rack" on page 94
- "Installing the main unit on the wall" on page 98
- "Installing the main unit on a flat surface" on page 100

Caution: When installing the BCM expansion unit in a rack, do not stack units directly on top of one another. Fasten each unit to the rack with the separate mounting brackets.

Connecting the BCM expansion unit to the BCM main unit

After the expansion unit is installed in the desired location, use the supplied DS256 cable (NTAB3086) to connect it to the BCM main unit. The cable has the following characteristics:

- all 8 pins must be connected as shown in Table 24 and Figure 60.
- the cable must be shielded
- the cable must be exactly 5 m long

Table 24 DS256 cable pinout

Signal name	Expansion unit PIN	Main unit PIN	Circuit name	Color
TXD +	1	1	PAIR 3 (-)	White-Green
TXD -	2	2	PAIR 3 (+)	Green
SYNC +	3	3	PAIR 2 (-)	White-Orange
CLK +	4	4	PAIR 1 (+)	Blue
CLK -	5	5	PAIR 1 (-)	White-Blue
SYNC -	6	6	PAIR 2 (+)	Orange
RXD +	7	7	PAIR 4 (-)	White-Brown
RXD -	8	8	PAIR 4 (+)	Brown

Figure 60 DS256 cable

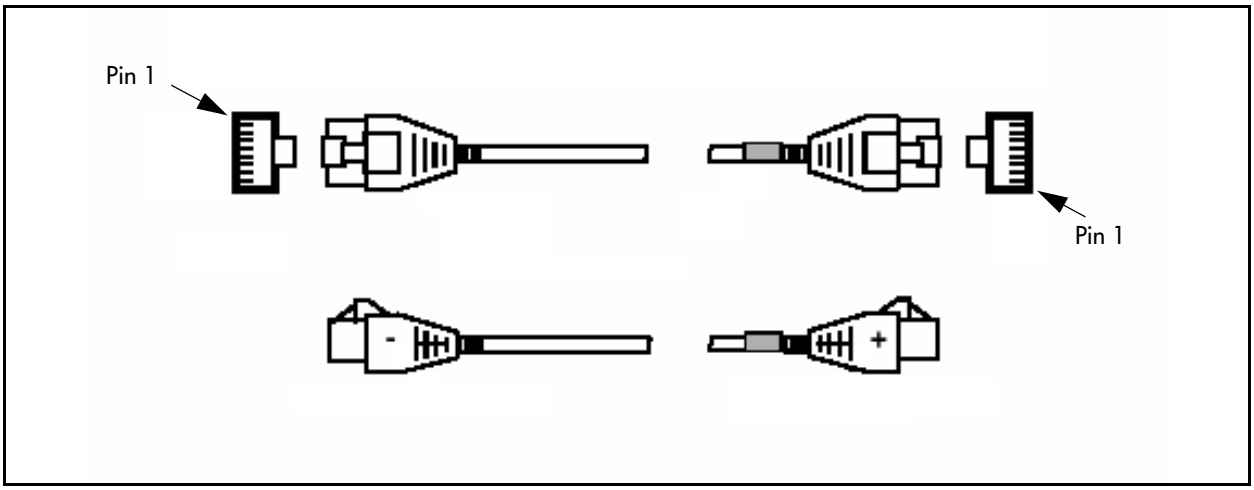

Warning: The timing in the BCM system is critical. Use the correct length cable as supplied with the expansion unit. The system will not work properly if you connect the BCM expansion unit using a cable that varies in length.

To connect the expansion unit to the main unit

1 Plug one end of the supplied DS256 cable into the DS256 connector on the expansion unit (see Figure 61).

Figure 61 DS256 connector on the expansion unit

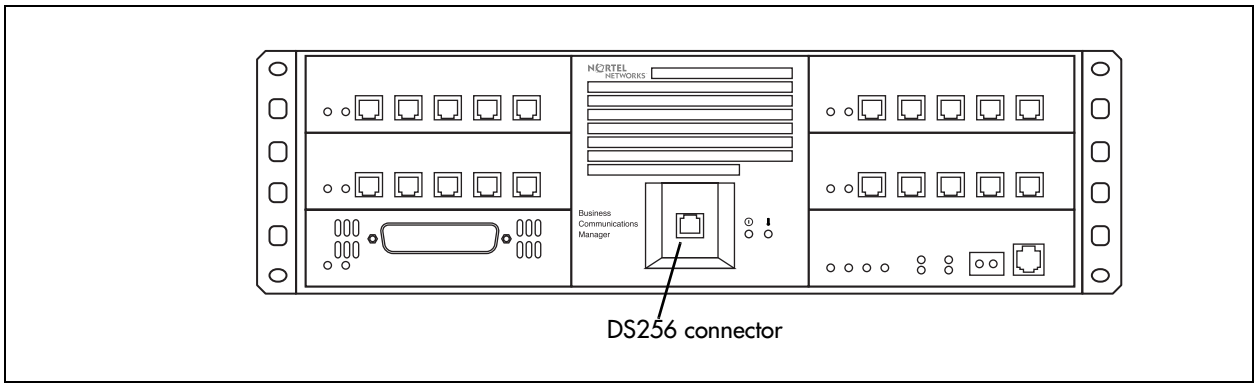

2 Plug the other end of the cable into the DS256 connector on the faceplate of the MSC in the BCM main unit (see Figure 62).

Figure 62 BCM main unit DS256 connector

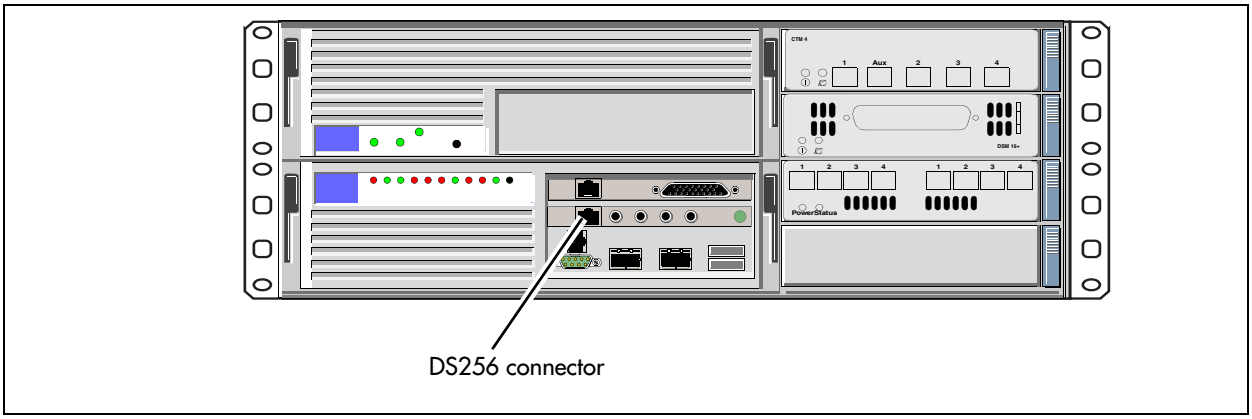

Chapter 8
Installing a media bay module (MBM)

Use the procedures in this chapter to select and install the media bay modules (MBM) in BCM main unit and the expansion unit.

This chapter contains the following information:

- "Selecting MBMs for your BCM system" on page 107
- "Determining system capacity" on page 111
- "Assigning DS30 resources" on page 116
- "Determining MBM DIP switch settings" on page 118
- "Setting MBM DIP switches" on page 122
- "Assigning line and extension numbers" on page 123
- "Installing an MBM" on page 137

Selecting MBMs for your BCM system

MBMs are plug-in devices that connect your extensions and the public switched telephone network (PSTN) lines to the call processing capabilities of the BCM system.

When you order your BCM system, there are no MBMs installed. You can select the number and type of MBMs that best suit your business requirements.

There are three types of MBMs:

- Trunk media bay module (see "Selecting trunk MBMs" on page 108)
- Station media bay module (see "Selecting station MBMs" on page 110)
- Specialized media bay module (see "Selecting a fiber expansion module (FEM)" on page 111)

For further information on the role and function of each type of MBM, refer to "Media bay modules (MBMs)" on page 53.

If you have a large BCM system, there are some configuration restrictions that can apply to your system. For information about these restrictions, refer to "Assigning DS30 resources" on page 116.

See Figure 63 for an overview of the process for determining the MBMs for your system.

Figure 63 Process for determining MBMs

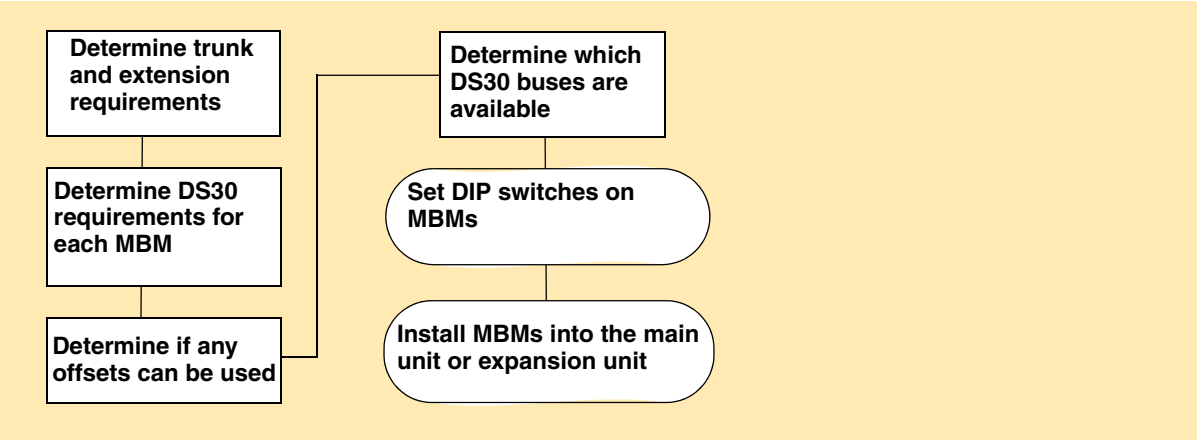

The first step in selecting the MBMs is to establish the number of extensions (internal lines) and PSTN lines (trunk lines) you have or need. This step allows you to determine the number and type of MBMs you require. The following sections describe how to determine which MBMs, and how many, you require for your system.

- "Selecting trunk MBMs" on page 108
- "Selecting station MBMs" on page 110
- "Selecting a fiber expansion module (FEM)" on page 111

After you determine the MBMs required, calculate how the MBMs use the available system resources. The following sections describe how the MBMs work within the available channels on the media services card (MSC) in the BCM system.

Selecting trunk MBMs

The number and type of lines coming into your system determine which trunk MBMs, and how many MBMs, you require to support your needs. Trunk lines come from the public network (PSTN) or they support connections in a private network.

If you are setting up an entirely new system, perform a site survey to determine your current and future needs. Nortel recommends that you perform the survey before you order any MBMs.

Note: If you plan to add any lines in the near future, include them in your initial estimates.

To select trunk MBMs

1 In Table 25, record the number of each type of line you have. If you do not know the number or type of lines you have, contact your service provider.

2 Use the number of lines and the number of lines per MBM to determine how many MBMs you need.

Table 25 Determine trunk MBM requirements

Type of lines	Number of lines	Type of MBM	Number of lines per MBM	Number of MBMs required
T1 digital lines		DTM	24	_____ DTM
Universal T1 MUX digital lines		DDIM	24 (also requires a full DS30 bus for the data module)	_____ DDIM
PRI digital lines (NA)		DTM	23	_____ DTM
E1 digital lines		DTM	30	_____ DTM
PRI digital lines (EMEA)		DTM	30	_____ DTM
Analog lines		CTM4	4	_____ CTM
Analog lines		CTM8	8	_____ CTM
Analog lines		GATM4	4	_____ GATM
Analog lines		GATM8	8	_____ GATM
Analog lines		4x16 combination MBM	4 (also requires half of the next DS30 bus for the DSM16 part)	_____ CTM
BRI ISDN lines		BRIM S/T	4 ISDN loops	_____ BRIM S/T

For example:

- If you require 24 T1 digital lines, you need 1 DTM because a single DTM can handle 24 T1 lines (North America).
- If you require 2 analog lines and 24 T1 digital lines, you need 1 GATM4 and 1 DTM.

Note: Although the DTM supports several types of digital lines, you cannot connect different types of lines to the same DTM. You can add a maximum of three DTMs or DDIMs to your BCM system.

Tip: The BCM400 main unit holds a maximum of four MBMs. If you require more MBMs, the BCM expansion unit supports a maximum of six additional MBMs.

Selecting station MBMs

The number and type of telephones and related equipment you have determines which station MBMs you require.

Note: If you are adding any extensions in the near future, include them in your calculations.

To select station MBMs

1 In Table 26, record the number of each type of extension you have.

2 Use the number of extensions and the number of extensions per MBM to determine how many MBMs you need.

Table 26 Determine station MBMs requirements

Type of extension	Number of extensions	Type of MBM	Number of extensions per MBM	Number of MBMs required
Digital extensions		DSM16/DSM16+	16	_____ DSM16
Digital extensions		DSM32/DSM32+	32	_____ DSM32
Digital extensions		4x16	16	_____ DSM16
Analog extensions		ASM8	8	_____ ASM8
Analog extensions		GASM8	8	_____ GASM8
Specialty modules				
Digital extensions are digital or IP telephones. You do not need to include IP telephones when calculating the number of required DSM MBMs. For a list of the telephones that can be used with the BCM system, refer to "Telephones and adapters" on page 74. Analog extensions include single-line telephones, fax machines, and modems.				

For example, in North America:

- If you require 12 digital extensions, you need 1 DSM16/DSM16+
- If you require 24 digital extensions, you need 1 DSM32/DSM32+

Note: If you require only a few analog extensions, you can use an ATA 2 to connect these devices to your DSM16(+), DSM32(+), or the DSM connector on a 4x16 MBM. Each analog extension requires an ATA 2.

Selecting a fiber expansion module (FEM)

The FEM allows you to connect a maximum of six Norstar MBMs to a BCM system. Each FEM connection requires one DS30 bus, therefore, the BCM used for this purpose can only support one FEM module if you are converting a fully-configured Norstar system.

Note: The DIP switch settings you chose determine which FEM ports are available. If you enable all six FEM ports, the BCM system has no more DS30 resources available. Therefore, you cannot connect more MBMs to the system.

Determining system capacity

After you have selected the MBMs you require, you must ensure that the BCM system can support all the MBMs. System capacity is ultimately determined by the line requirements of each MBM.

The following sections describe the DS30 buses, which manage the DS30 buses, and how you fit your MBMs into the overall system planning:

- "Understanding DS30 numbers" on page 111
- "Setting offsets" on page 112
- "Determining bus requirements" on page 113

Understanding DS30 numbers

A DS30 bus is a block of virtual pathways on the media services card (MSC).

On a default system, six buses of DS30 channel blocks can be assigned to MBMs. The block to which the MBM is assigned determines the range of line (trunk) numbers or extension numbers (DNs) that can be allocated by the MBM to the equipment connected to that MBM. The other two blocks are permanently routed to the PEC digital signal processors (DSPs) to support internal BCM functions such as voice mail, VoIP trunks, IVR, and IP telephony functions. This configuration is called a 2/6 bus split.

You can change the DS30 allocation to a 3/5 split to accommodate increased IP telephony or VoIP trunk requirements. You do this by assigning bus 7 to the voice data sector. This choice should be made at system startup, but a default system can be changed through Element Manager to a 3/5 split after startup if IP requirements increase. You indicate the split you want when you configure the system.

Warning: If you change the bus split from 3/5 to 2/6 after your system is configured, you will lose all the data and optional application connections.

Figure 64 shows a model of how the MSC DS30 buses are a subgroup of the DS256 bus on the MSC. The diagram also shows the offset channels, which are a subgroup of the buses.

Figure 64 DS30 model

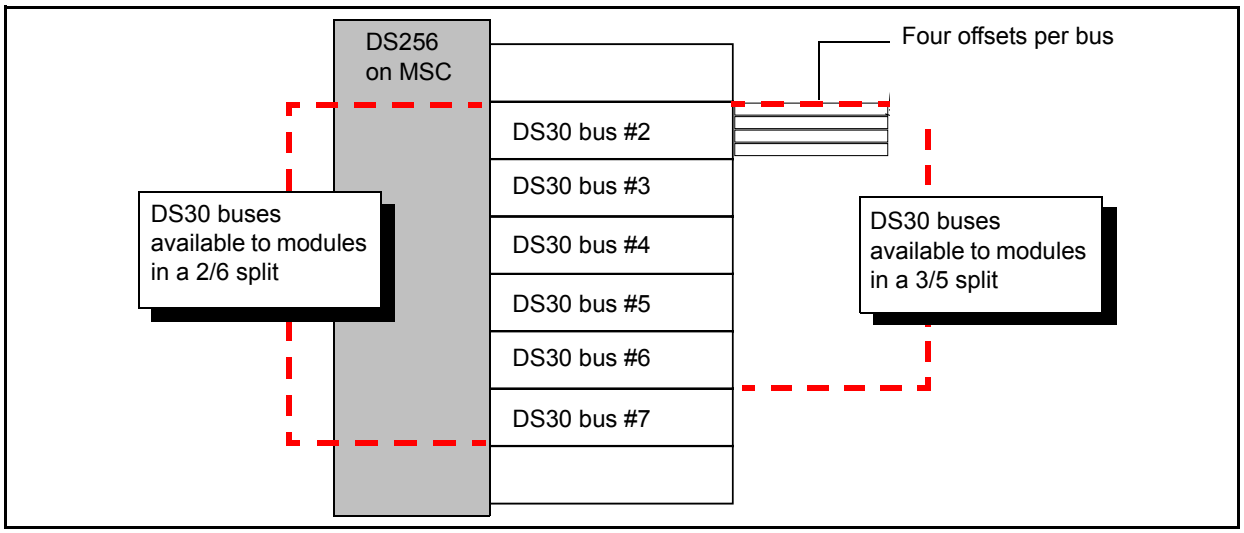

DS30 numbers are set using the number 4, 5, and 6 DIP switches on the back or underside of the MBMs. The exception is the FEM MBM. The FEM DIP switches turn on ports, each of which consumes one bus.

Setting offsets

Each offset represents one-quarter of a DS30 bus. Each bus supports 16 lines (32 time slots) for most MBMs.

Note: Double Density

The 32 time slots are important when you are working with station MBMs. The DSM16+, DSM32+, ASM8+, and GASM8 can be configured, using the offset DIP switches, to use each of these time slots as separate telephone lines. This, essentially, doubles your system telephone capacity.

Exceptions:

- DTM MBMs, which support 23 to 30 lines per bus
- FEM MBMs, where each bus supports one Norstar fiber module connection.

Offsets are numbered 0, 1, 2, and 3. MBMs that require less than a full bus can be assigned a DS30 number and an offset number. This allows more than one MBM to be assigned the same DS30 number, but with a different offset number.

MBMs that can have offsets assigned include CTM4, CTM8, BRIM S/T, ASM8+, and GASM8. For example, two CTM8s can be assigned to the same DS30 number, with different offset numbers. However, you cannot assign a CTM8 and a BRIM to the same DS30.

Offsets are assigned using DIP switches 1, 2, and 3 on the MBM.

Note: MBMs that do not, or cannot, share DS30 buses always assign the offset as 0 (zero). As well, if the MBM requires more than one bus, such as the 4x16 or the DDIM, only the first DS30 is set on the DIP switches. The next consecutive DS30 bus is automatically assigned by the MBM.

Figure 65 on page 113 shows a DS30 broken down into four offset groups of four (single density) or eight (double density) lines each.

Note: When you enable a station MBM for double density, the line numbers double.

Figure 65 Offsets are part of DS30 channel line groups

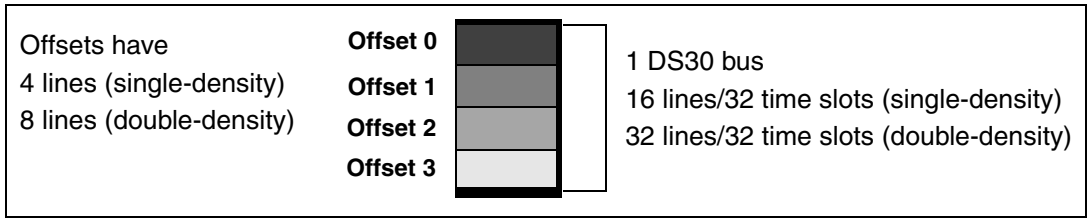

Determining bus requirements

Figure 66 shows the DS30 bus requirements of each MBM. Note the differences between MBMs set to single density and MBMs set to double density.

Note: If you choose a CTM8, DDIM, or 4x16, there are some restrictions on the offsets you can choose. Refer to the DIP switch settings in "CTM switch settings" on page 125 and "4x16 switch settings" on page 128 for details.

Figure 66 Space requirements for MBMs, on a per-DS30 configuration

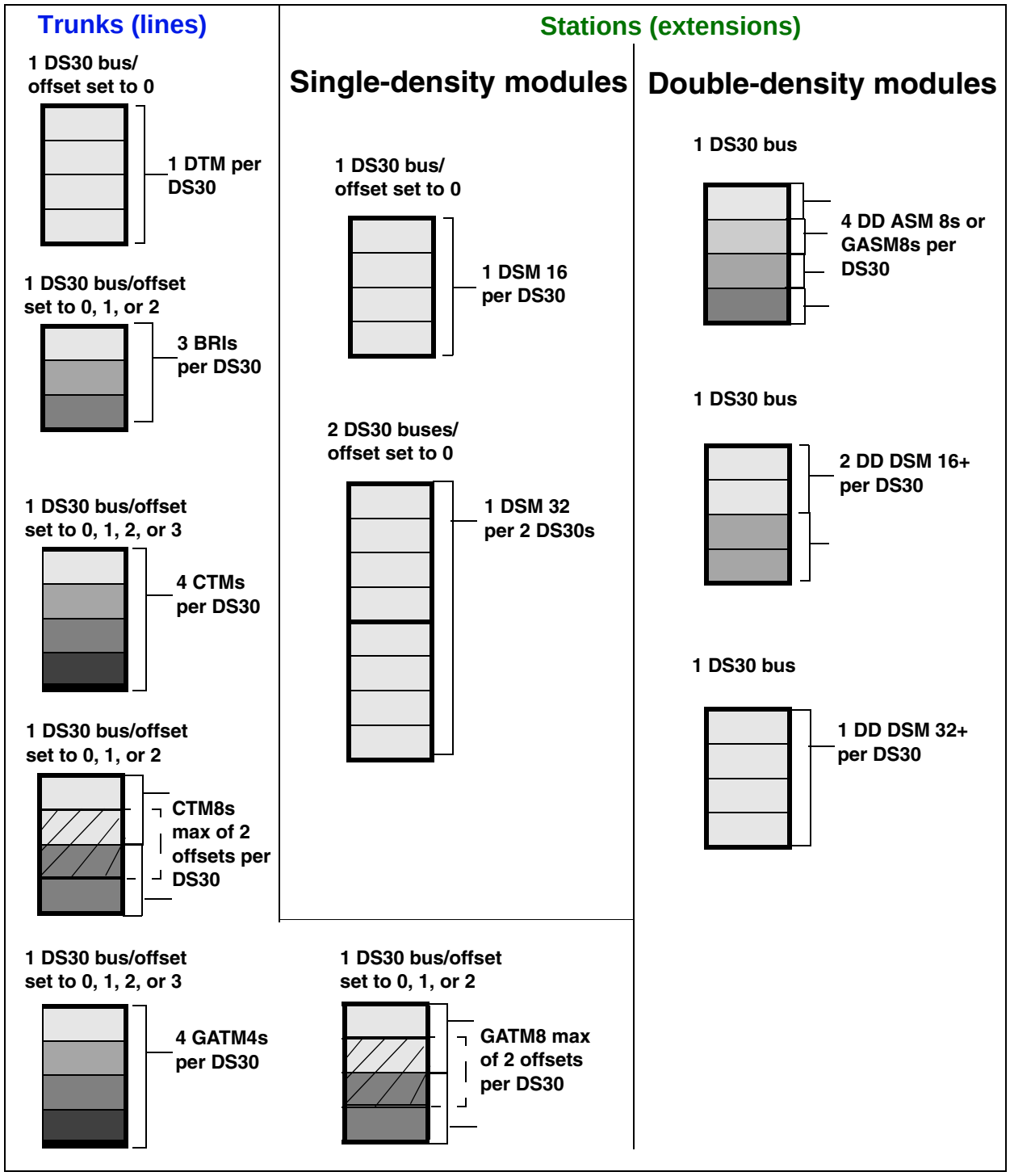

Figure 67 on page 115 illustrates the space requirements for special MBMs.

Figure 67 Space requirements for special MBMs

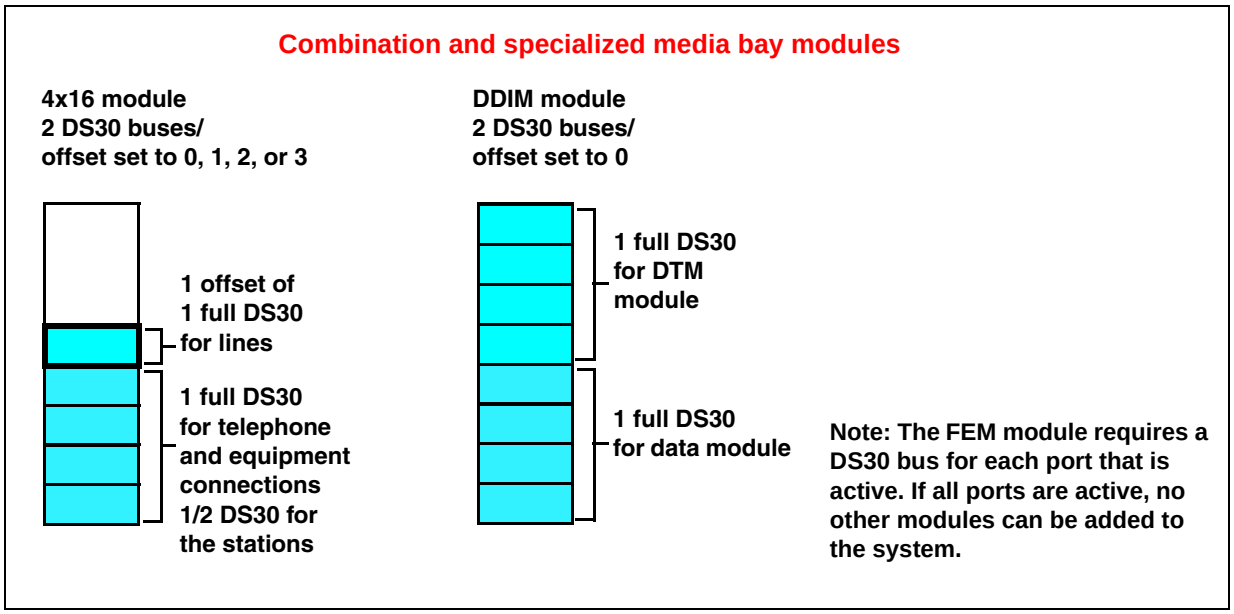

To determine bus requirements

1 Make a list of MBMs and the space requirements for each MBM you chose. Refer to the following table.

Table 27 Matching MBMs to DS30 bus capacity

DS30 split 2/6 (default) _____ 3/5 (extra IP lines) _____		
Type of module	**Number required**	**DS30s/offsets required**

2 Set the bus numbers and offsets on the MBM DIP switches. Refer to "Determining MBM DIP switch settings" on page 118. Note that you assign trunk MBMs starting from the bottom DS30, and you assign station MBMs starting from the top DS30.

3 Install the MBMs into the BCM main unit or expansion unit. Refer to "Installing a media bay module (MBM)" on page 107.

Assigning DS30 resources

MBMs are assigned to DS30 buses in a specific hierarchical manner. This section describes the preferred order of positioning for each type of MBM.

The following are some general notes about assigning MBMs:

- The DIP switches on the DDIM are used to set the DS30 designation for the DTM part of the MBM. The MBM automatically assigns an additional DS30 for the data part of the DDIM. You cannot choose DS30 7 for the DDIM because the data MBM would not be accessible. The same applies to DS30 6 if your system is set to a 3/5 split. Refer to "DDIM switch settings" on page 124.
- If you chose a 3/5 bus split for your system, DS30 7 cannot be used by any MBM. For MBMs that require two buses, this means that you cannot set the DIP switches to DS30 6 for those MBMs because the second level of lines falls into DS30 7, which is not accessible (see Figure 68 on page 117).
- Refer to "Understanding DS30 numbers" on page 111 for more information about 2/6 and 3/5 DS30 bus splits.
- DSM32 MBMs require two DS30 numbers. When you assign the first DS30 number to a DSM32, the MBM automatically adds the next DS30 number. For example, if you assign DS30 2 to a DSM32, it uses DS30 2 and 03. However, you cannot choose DS30 7 for the DSM32 because the second level of DSM lines would not be accessible. The same applies to DS30 6 if your system is set to a 3/5 split. Refer to "DSM switch settings" on page 132.
- DSM 32+ MBMs can be set to either single or double density. When they are set to double density, the MBM only requires one DS30 bus.
- The DIP switches on the 4x16 are used to set the DS30 designation and offset for the CTM part of the MBM. The MBM automatically assigns the first half of the next bus for the 16 DSM lines. However, you cannot choose DS30 7 for the 4x16 because the DSM lines would not be accessible. The same applies to DS30 6 if your system is set to a 3/5 split. Refer to "4x16 switch settings" on page 128.
- The CTM8 uses two offsets on a DS30 bus. You assign the first offset to the MBM, and the second offset is automatically selected. This means that you can choose offset pairs 0-1, 1-2, or 2-3. Because the MBM requires two offsets on the same DS30, you cannot select offset 3. Refer to "CTM switch settings" on page 125.
- Not all MBMs are available to all systems. Refer to "Selecting MBMs for your BCM system" on page 107 for specifics about each MBM.

Note: Remember, if you have chosen a 3/5 bus split for your system, DS30 bus 7 is no longer available for MBMs.

Choosing the assigned order for MBMs

Assign the MBMs and DS30 buses in the order shown in Figure 68 on page 117.

Station MBMs are assigned starting with DS30 2. This allows telephones to start numbering from the system Start DN (the default is 221).

Trunk MBMs are assigned starting at DS30 7 in a system with a 2/6 DS30 split, and at DS30 6 in a system with a 3/5 split. The exception to this is the 4x16 and the DDIM, which require two DS30 buses that must be set to a DS30 that has the next bus open.

Figure 68 Assigning single-density MBMs to the DS30 bus hierarchy

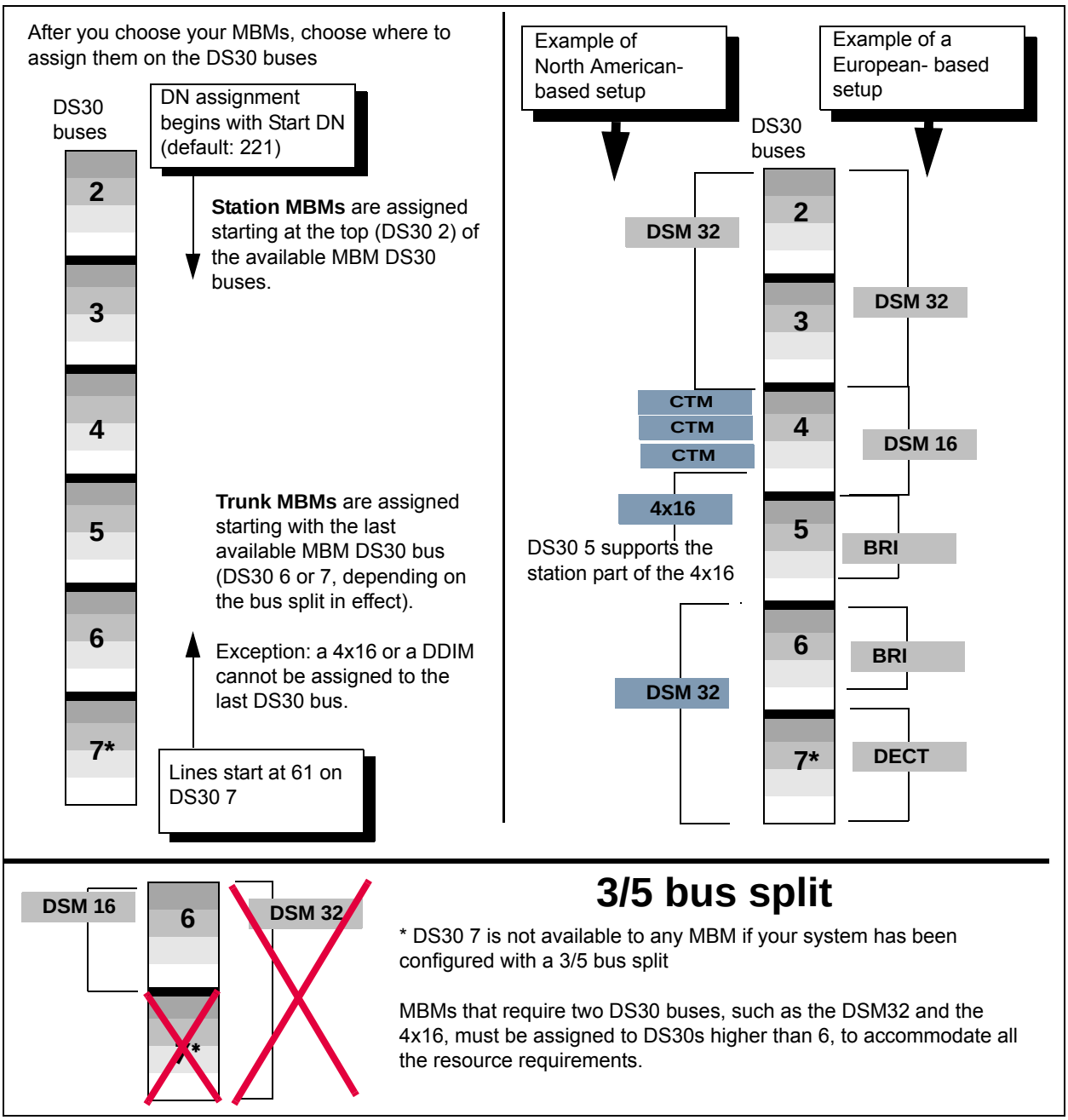

Determining MBM DIP switch settings

Assign DIP switch settings before you install an MBM. The DIP switches are located on the back or underside of the MBM.

Note: Fiber expansion module (FEM) switches

The switches on the fiber expansion module (FEM) do not work in the same way as those of the trunk or station MBMs. On the FEM, the switches turn the fiber ports on and off. For information about setting the switches on an FEM, refer to "FEM switch settings" on page 135.

To determine MBM DIP switch settings

1. Use Table 28 (trunk MBMs) and Table 29 (station MBMs) to determine a switch setting for all MBMs except the FEM. Figure 69 on page 119 shows an example of the table and how to do the following steps.
2. On Table 28 or Table 29 circle the MBM names.
3. Number the order in which you want to assign the MBMs.
4. Determine the number of DS30s each MBM requires. For some station MBMs this depends on whether you choose to set the MBM to single or double density.
5. Circle the DS30 bus and offset numbers.
6. Follow the DS30 bus and offset numbers to the far right column where the switch settings are indicated. Circle the setting for each MBM.

Note: If you must assign specific line or extension numbers to an MBM, refer to the individual switch tables in "Assigning line and extension numbers" on page 123 for line and DN listings.

Figure 69 How to use the configuration map

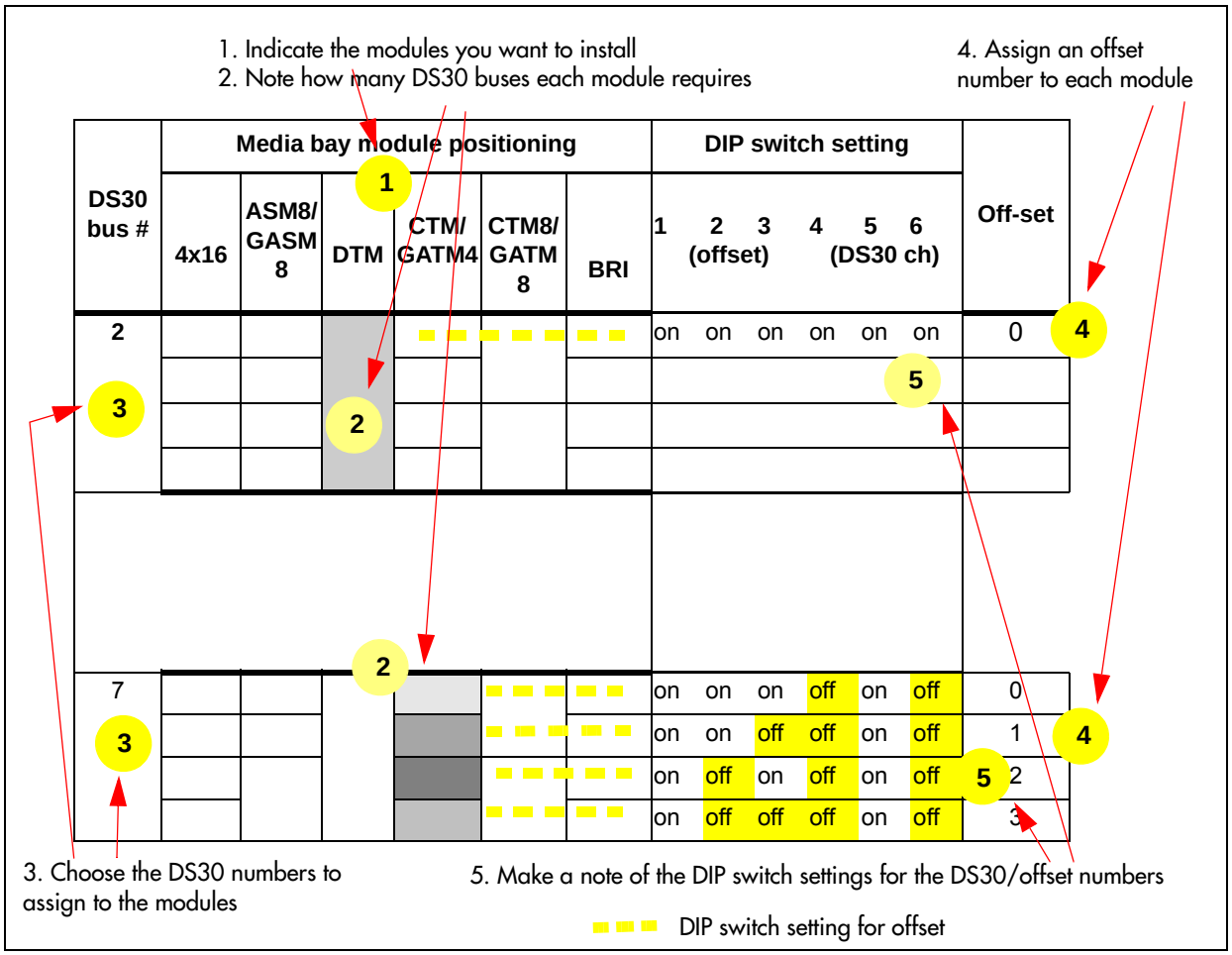

Example: Position your DSM 32 MBM (step 1), which requires two full DS30 buses (step 2), in DS30 2 and 3 (step 3). Moving across, note that the offset is 0 (step 4). Set the DIP switches on the MBM to match the DIP switch settings indicated for that offset (step 5).

Table 28 shows possible DS30 and offset configurations for each type of trunk MBM, and the corresponding switch settings. For FEM settings, refer to "FEM switch settings" on page 135.

Table 28 Possible trunk MBM DIP switch settings (Sheet 1 of 2)

DS30 bus #	Trunk MBM positioning									DIP switch settings	Offsets
	4x16 Offsets 0,1, 2, 3 Line	Exten.	DDIM Offset 0	DTM Offset 0	CTM Offsets 0, 1, 2, 3	CTM8 Offsets 0, 1, 2	GATM Offsets 0, 1, 2, 3	GATM8 Offsets 0, 1, 2	BRI Offsets 0, 1, 2, 3	1 2 3 4 5 6 (offset) (DS30 #)	
2	0	Picks up ch. #3	0	Picks up ch. #3	0	0	0	0	0	on on on on on on	0
	1				1	1	1	1	1	on on off on on on	1
	2				2	2	2	2	2	on off on on on on	2
	3				3		3			on off off on on on	3

Table 28 Possible trunk MBM DIP switch settings (Sheet 2 of 2)

DS30 bus #	Trunk MBM positioning												DIP switch settings						Offsets
	4x16 Offsets 0,1, 2, 3 Line	Exten.	DDIM Offset 0		DTM Offset 0	CTM Offsets 0, 1, 2, 3	CTM8 Offsets 0, 1, 2		GATM Offsets 0, 1, 2, 3	GATM8 Offsets 0, 1, 2		BRI Offsets 0, 1, 2, 3	1 (offset)	2	3	4 (DS30 #)	5	6	
3	0	Picks up ch. #4	0	Picks up ch. #4	0	0	0		0	0		0	on	on	on	on	on	off	0
	1					1		1	1		1	1	on	on	off	on	on	off	1
	2					2	2		2	2		2	on	off	on	on	on	off	2
	3					3			3				on	off	off	on	on	off	3
4	0	Picks up ch. #5	0	Picks up ch. #5	0	0	0		0	0		0	on	on	on	on	off	on	0
	1					1		1	1		1	1	on	on	off	on	off	on	1
	2					2	2		2	2		2	on	off	on	on	off	on	2
	3					3			3				on	off	off	on	off	on	3
5	0	Picks up ch. #6	0	Picks up ch. #6	0	0	0		0	0		0	on	on	on	on	off	off	0
	1					1		1	1		1	1	on	on	off	on	off	off	1
	2					2	2		2	2		2	on	off	on	on	off	off	2
	3					3			3				on	off	off	on	off	off	3
6	0	Picks up ch. #7	0	Picks up ch. #7	0	0	0		0	0		0	on	on	on	off	on	on	0
	1					1		1	1		1	1	on	on	off	off	on	on	1
	2					2	2		2	2		2	on	off	on	off	on	on	2
	3					3			3				on	off	off	off	on	on	3
7***	Not supported		Not supported		0	0	0		0	0		0	on	on	on	off	on	off	0
						1		1	1		1	1	on	on	off	off	on	off	1
						2	2		2	2		2	on	off	on	off	on	off	2
						3			3				on	off	off	off	on	off	3

MBM set to offset 0 MBM set to offset 1 MBM set to offset 2 MBM set to offset 3

Each shaded square represents the amount of the DS30 bus, and the offset, which the MBM requires.

***If your system is configured with a 3/5 DS30 bus split, DS30 bus 7 is not available to MBM and DS30 bus 6 is not supported for the 4x16 and DDIM.

Table 29 shows possible DS30 and offset configurations for each type of station MBM, and the corresponding switch settings. Note that DIP switch 1 indicates the density mode for DSM 16+ and DSM 32+ (SDD = single density, DIP switch 1:on; FDD = Double Density, DIP switch 1:off).

Table 29 Possible station MBM DIP switch settings

DS30 bus #	Station MBM positioning						DIP switch settings (Single density)						DIP switch settings (Double density)						Offsets
	DSM16+ Offsets 0, 1 SDDFDD		DSM32+ Offsets 0, 1 SDDFDD		ASM 8/ GASM8 Offsets 0, 1, 2, 3		1 (offset)	2 (offset)	3 (offset)	4 (DS30 #)	5 (DS30 #)	6 (DS30 #)	1 (offset)	2 (offset)	3 (offset)	4 (DS30 #)	5 (DS30 #)	6 (DS30 #)	
2	0	0	0		0	0***	on	on	on	on	on	on	off	on	on	on	on	on	0
						1	on	on	off	on	on	on	off	on	off	on	on	on	1
		1				2	on	off	on	on	on	on	off	off	on	on	on	on	2
						3	on	off	off	on	on	on	off	off	off	on	on	on	3
3	0	0		0	0	0	on	on	on	on	on	off	off	on	on	on	on	off	0
						1	on	on	off	on	on	off	off	on	off	on	on	off	1
		1				2	on	off	on	on	on	off	off	off	on	on	on	off	2
						3	on	off	off	on	on	off	off	off	off	on	on	off	3
4	0	0	0		0	0	on	on	on	on	off	on	off	on	on	on	off	on	0
						1	on	on	off	on	off	on	off	on	off	on	off	on	1
		1				2	on	off	on	on	off	on	off	off	on	on	off	on	2
						3	on	off	off	on	off	on	off	off	off	on	off	on	3
5	0	0		0	0	0	on	on	on	on	off	off	off	on	on	on	off	off	0
						1	on	on	off	on	off	off	off	on	off	on	off	off	1
		1				2	on	off	on	on	off	off	off	off	on	on	off	off	2
						3	on	off	off	on	off	off	off	off	off	on	off	off	3
6*	0	0	0		0	0	on	on	on	off	on	on	off	on	on	off	on	on	0
						1	on	on	off	off	on	on	off	on	off	off	on	on	1
		1				2	on	off	on	off	on	on	off	off	on	off	on	on	2
						3**	on	off	off	off	on	on	off	off	off	off	on	on	3
7*	0	0			0	0	on	on	on	off	on	off	off	on	on	off	on	off	0
						1	on	on	off	off	on	off	off	on	off	off	on	off	1
		1				2	on	off	on	off	on	off	off	off	on	off	on	off	2
						3**	on	off	off	off	on	off	off	off	off	off	on	off	3

MBM set to offset 0 MBM set to offset 1 MBM set to offset 2 MBM set to offset 3

Each shaded square represents the amount of the DS30 bus, and the offset, which the MBM requires.

* If your system is configured with a 3/5 DS30 split, DS30 7 is not available to MBMs.

** ASM MBMs always use the single density DIP switch settings, with the appropriate offset.

Setting MBM DIP switches

Before you install the MBMs into the BCM system, you must set the DIP switches. Make a note of these settings either on the chart shown in Table 28 or in the Programming Record form.

To set MBM DIP switches

1 Locate the DIP switches on the MBM. See Figure 70.

Figure 70 MBM DIP switches

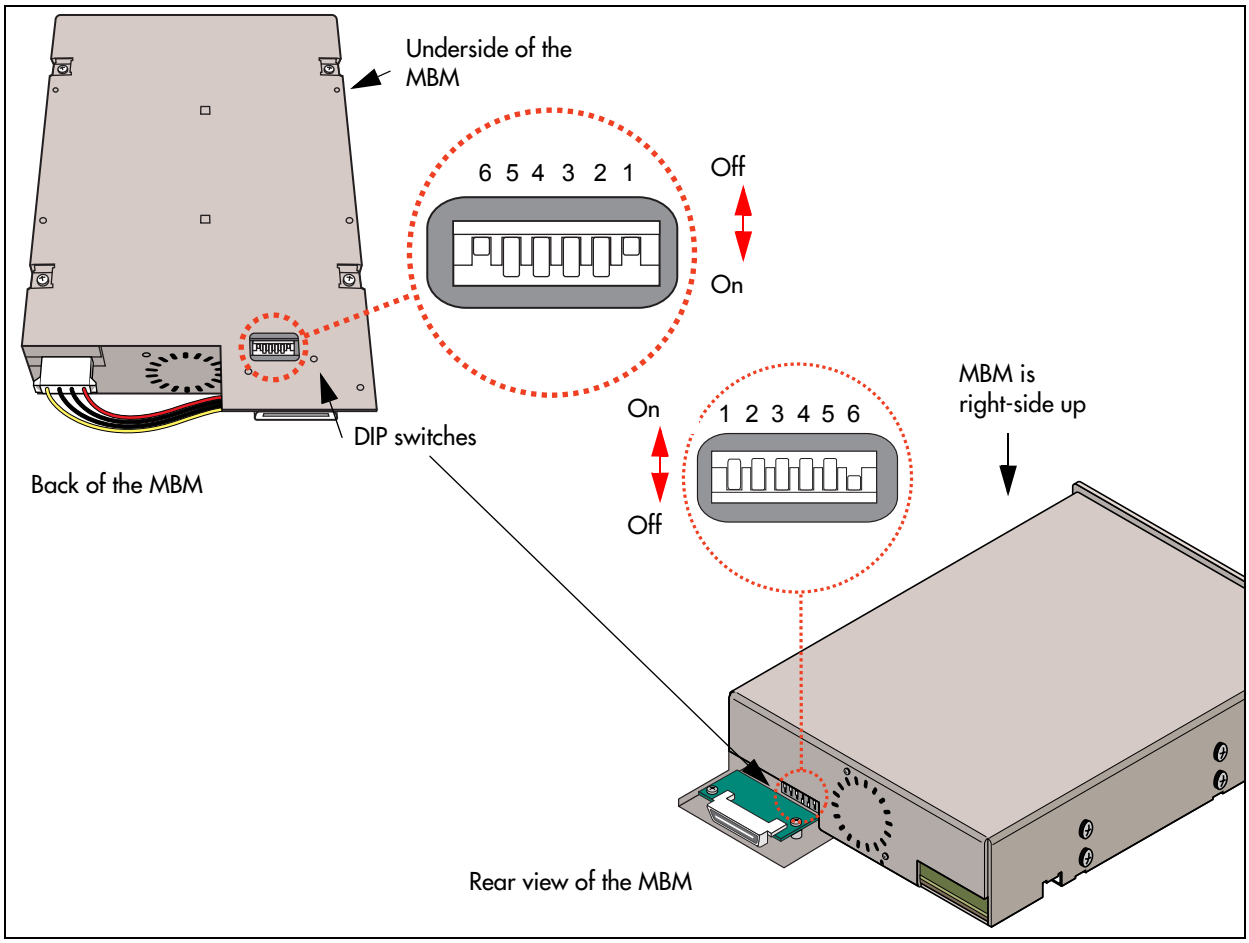

Note: The GASM and GATM MBMs have a different DIP switch configuration than shown in Figure 70.

2 Set the switches to correspond with the settings you chose in the procedure "To determine MBM DIP switch settings" on page 118.

3 Repeat step 2 for each MBM you want to install.

4 You are now ready to install the MBMs into the BCM system. Refer to "Installing optional telephony equipment" on page 175 for details.

Tip: Create a label with the DS30 bus and DIP switch settings. Affix the label to the front of the MBM as a quick reference during maintenance activities.

Assigning line and extension numbers

The switch settings on the MBM determine the line numbers and extension numbers the MBMs use. The tables in this section show the correspondence between DS30 numbers, switch settings, and the line and extension numbers for each type of MBM. The DS30 number and switch settings correspond with Table 28.

DTM switch settings

Although DTMs have more than 16 lines, they occupy only one DS30 bus per DTM.

Table 30 shows the switch settings for each DS30 bus, and the resulting line assignments.

Table 30 DTM switch settings (T1)

Select DS30 bus	Enter these switch settings						To assign these lines
	1	2	3	4	5	6	
2	on	on	on	on	on	on	211-234
3	on	on	on	on	on	off	181-204
4	on	on	on	on	off	on	151-174
5	on	on	on	on	off	off	121-144
6	on	on	on	off	on	on	91-114
***7	on	on	on	off	on	off	61-84

***If your system is configured with a 3/5 DS30 split, DS30 bus 7 is not available.

Table 31 shows the switch settings for each DS30 bus, and the resulting line assignments.

Table 31 DTM switch settings (North American PRI)

Select DS30 bus	Enter these switch settings						To assign these lines
	1	2	3	4	5	6	
2	on	on	on	on	on	on	211-233
3	on	on	on	on	on	off	181-203
4	on	on	on	on	off	on	151-173
5	on	on	on	on	off	off	121-143
6	on	on	on	off	on	on	91-113
***7	on	on	on	off	on	off	61-83

***If your system is configured with a 3/5 DS30 split, DS30 bus 7 is not available.

Table 32 shows the switch settings for each DS30 bus, and the resulting line assignments.

Table 32 DTM switch settings (E1 and UK PRI)

Select DS30 bus	Enter these switch settings						To assign these lines
	1	2	3	4	5	6	
2	on	on	on	on	on	on	211-240
3	on	on	on	on	on	off	181-210
4	on	on	on	on	off	on	151-180
5	on	on	on	on	off	off	121-150
6	on	on	on	off	on	on	91-120
***7	on	on	on	off	on	off	61-90

***If your system is configured with a 3/5 DS30 split, DS30 bus 7 is not available.

DDIM switch settings

The DDIM combines a DTM and a data module. The switch setting you choose determines the DS30 bus assigned to the DTM portion of the DDIM. The data module is automatically assigned the next DS30 bus number.

The DS30 bus you assign to the DDIM determines the line numbers of the T1 line connected to the DDIM. Table 33 shows the switch settings for each DS30 bus, and the resulting line assignments.

Table 33 DDIM switch settings

Select DS30 bus	Enter these switch settings						To assign these lines	Data module DS30 bus
	1	2	3	4	5	6		
2	on	on	on	on	on	on	211-234	3
3	on	on	on	on	on	off	181-204	4
4	on	on	on	on	off	on	151-174	5
5	on	on	on	on	off	off	121-144	6
6	on	on	on	off	on	on	91-114	7*
7								**

* If your system is configured with a 3/5 DS30 split, you cannot use DS30 bus 6 for the DDIM. When you use a 3/5 split, DS30 bus 7 is not available for the data module portion of the DDIM.

** You cannot use DS30 bus 7 for the DDIM. If you assign DS30 bus 7, there is no DS30 bus available for the data module portion of the DDIM.

BRI switch settings

You can install a maximum of three BRIM MBMs per DS30 bus on the offsets indicated in Table 34.

Table 34 BRIM S/T switch settings

Select DS30 bus	Select offset	Enter these switch settings 1	2	3	4	5	6	To assign these lines
2	0	on	on	on	on	on	on	211-218
	1	on	on	off	on	on	on	219-226
	2	on	off	on	on	on	on	227-234
3	0	on	on	on	on	on	off	181-188
	1	on	on	off	on	on	off	189-196
	2	on	off	on	on	on	off	197-204
4	0	on	on	on	on	off	on	151-158
	1	on	on	off	on	off	on	159-166
	2	on	off	on	on	off	on	167-174
5	0	on	on	on	on	off	off	121-128
	1	on	on	off	on	off	off	129-136
	2	on	off	on	on	off	off	137-144
6	0	on	on	on	off	on	on	91-98
	1	on	on	off	off	on	on	99-106
	2	on	off	on	off	on	on	107-114
***7	0	on	on	on	off	on	off	61-68
	1	on	on	off	off	on	off	69-76
	2	on	off	on	off	on	off	77-84

***If your system is configured with a 3/5 DS30 split, DS30 bus 7 is not available.

CTM switch settings

There are two models of CTMs.

CTM4: The CTM4 provides connections for four analog calling line identification (CLID) PSTN lines. Each voice line uses one line in the offset. Because each DS30 bus has four lines per offset, you can assign a maximum of four CTMs to a single DS30 bus by making the offset switch settings different for each MBM. You can also combine three CTMs with the trunk part of the 4x16 on the same DS30 bus.

CTM8: The CTM8 provides connections for eight analog calling line identification (CLID) PSTN lines. Each line uses one voice line. Because each DS30 bus has four lines per offset, you require two offsets. You can assign a maximum of two CTM8s to a DS30 bus by making the offset switch settings different for each MBM. You can also combine a CTM8 with a 4x16 on the same DS30 number. When you choose an offset number for the CTM8, the system automatically adds the next offset number. You cannot assign offset 3 to the CTM8 because this does not allow the MBM to assign the second set of lines.

You can also mix the two MBMs. For instance, if you have two existing CTM MBMs with offset 0 and 1, you can add a CTM8 on offset 2.

Table 35 shows the switch settings for each DS30 number, and the resulting line assignments for CTMs and CTM8s.

Table 35 CTM4 and CTM8 switch settings

Select DS30 bus	Select offset	Enter these switch settings						To assign these lines CTM4	To assign these lines CTM8	
		1	2	3	4	5	6		Lower (lines 1-4)	Upper (lines 5-8)
2	0	on	on	on	on	on	on	211-214	211-214	219-222
	1	on	on	off	on	on	on	219-222	219-222	227-230
	2	on	off	on	on	on	on	227-230	227-230	235-238
	3	on	off	off	on	on	on	235-238	Not supported	Not supported
3	0	on	on	on	on	on	off	181-184	181-184	189-192
	1	on	on	off	on	on	off	189-192	189-192	197-200
	2	on	off	on	on	on	off	197-200	197-200	205-208
	3	on	off	off	on	on	off	205-208	Not supported	Not supported
4	0	on	on	on	on	off	on	151-154	151-154	159-162
	1	on	on	off	on	off	on	159-162	159-162	167-170
	2	on	off	on	on	off	on	167-170	167-170	175-178
	3	on	off	off	on	off	on	175-178	Not supported	Not supported
5	0	on	on	on	on	off	off	121-124	121-124	129-132
	1	on	on	off	on	off	off	129-132	129-132	137-140
	2	on	off	on	on	off	off	137-140	137-140	145-148
	3	on	off	off	on	off	off	145-148	Not supported	Not supported
6	0	on	on	on	off	on	on	91-94	91-94	99-102
	1	on	on	off	off	on	on	99-102	99-102	107-110
	2	on	off	on	off	on	on	107-110	107-110	115-118
	3	on	off	off	off	on	on	115-118	Not supported	Not supported
***7	0	on	on	on	off	on	off	61-64	61-64	69-72
	1	on	on	off	off	on	off	69-72	69-72	77-80
	2	on	off	on	off	on	off	77-80	77-80	85-88
	3	on	off	off	off	on	off	85-88	Not supported	Not supported

***If your system is configured with a 3/5 DS30 split, DS30 bus 7 is not available.

GATM switch settings

There are two models of GATM:

GATM 4: The GATM 4 provides connections for four analog calling line identification (CLID) or supervision disconnect PSTN lines. Each voice line uses one line in the DS30 bus offset. Because each DS30 bus has four lines per offset, you can assign a maximum of four GATM4s to a single DS30 bus by making the offset switch settings different for each MBM.

GATM 8: The GATM 8 provides connections for eight analog calling line identification (CLID) or supervision disconnect PSTN lines. Each line uses one line in the DS30 bus offset. Because each DS30 bus has four lines per offset, you require two offsets for each GATM 8. You can assign a maximum of two GATM 8s to a DS30 bus by making the offset switch settings different for each MBM.

You can also combine a GATM 8 with a 4x16 on the same DS30 number. When you choose an offset number for the GATM 8, the system automatically adds the next offset number. You cannot assign offset 3 to the GATM 8 because this does not allow the MBM to assign the second set of lines.

There are two sets of DIP switches located on the rear of the GATM:

- The left set allows you to determine the DS30 bus and offset for the MBM.
- The right set allows you to manually configure a country profile operation, which is required for earlier versions of software.

However, BCM 3.6 and newer software supports downloadable firmware for the North America, Taiwan, UK, and Australia telephony profiles. BCM 3.6.1 and newer versions of BCM software also support the Poland profile (in download mode only). To allow the GATM to download the parameters for these countries and to allow for firmware upgrades, set all the country DIP switches to 0 (zero/off) (factory default). The MSC telephony profile you choose must support the appropriate country setting to ensure that the correct firmware installs. Refer to Figure 71.

Figure 71 GATM switch settings

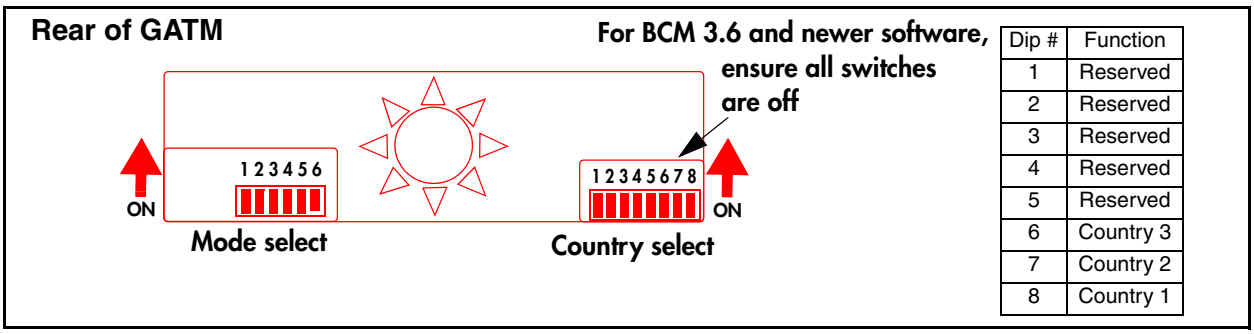

Dip #	Function
1	Reserved
2	Reserved
3	Reserved
4	Reserved
5	Reserved
6	Country 3
7	Country 2
8	Country 1

Table 36 lists the DIP switch settings for the GATM country select DIP switches.

Table 36 GATM country select DIP switch settings

Country select DIP switch settings																				
1	2	3	4	5	6	7	8		1	2	3	4	5	6	78					
Setting for automatic downloads (all countries)									Manual settings (pre-BCM 3.5 systems)											
off	off	off	off	off	off	off	off	Download based on profile	off	off	off	off	off	off	off	on	North America (600 ohms)			
									off	off	off	off	off	off	on	off	Taiwan			
									off	off	off	off	off	off	on	on	Australia			
									off	off	off	off	off	on	off	off	United Kingdom			
									off	off	off	off	off	on	off	on	North America (900 ohms)			

Table 37 lists the possible DIP switch settings for the GATM mode select DIP switches.

Table 37 GATM mode select switch settings

Mode select DIP switch settings																							
DS30 bus #	Off-sets	Offset positions			Dip switch settings							DS30 bus #	Off-sets	Offset positions			Dip switch settings						
		GATM4 Offsets 0, 1, 2, 3	GATM8 Offsets 0, 1, 2		1	2	3	4	5	6				GATM4 Offsets 0, 1, 2, 3	GATM8 Offsets 0, 1, 2		1	2	3	4	5	6	
					(offset)			(DS30 #)									(offset)			(DS30 #)			
2	0	0	0		on	on	on	on	on	on		5	0	0	0		on	on	on	on	off	off	
	1	1		1	on	on	off	on	on	on			1	1		1	on	on	off	on	off	off	
	2	2	2		on	off	on	on	on	on			2	2	2		on	off	on	on	off	off	
	3	3			on	off	off	on	on	on			3	3			on	off	off	on	off	off	
3	0	0	0		on	on	on	on	on	off		6	0	0	0		on	on	on	off	on	on	
	1	1		1	on	on	off	on	on	off			1	1		1	on	on	off	off	on	on	
	2	2	2		on	off	on	on	on	off			2	2	2		on	off	on	off	on	on	
	3	3			on	off	off	on	on	off			3	3			on	off	off	off	on	on	
4	0	0	0		on	on	on	on	off	on		7***	0	0	0		on	on	on	off	on	off	
	1	1		1	on	on	off	on	off	on			1	1		1	on	on	off	off	on	off	
	2	2	2		on	off	on	on	off	on			2	2	2		on	off	on	off	on	off	
	3	3			on	off	off	on	off	on			3	3			on	off	off	off	on	off	

4x16 switch settings

The 4x16 MBM combines a CTM and a DSM16. The CTM only requires four lines on the DS30 bus. Therefore, it can be assigned any of the four offsets in a DS30 bus. The DSM then automatically assigns the next DS30 bus and all the assigned DNs.

The 4x16 MBM can be combined with three other CTMs or one CTM8 on the same DS30 bus.

Table 38 shows the switch settings for each DS30 bus, and the assigned lines and dialing numbers (DNs) for each DS30 bus.

Table 38 4x16 switch settings

Select DS30 bus #	Select offset	Enter these switch settings						To assign these lines	And this DS30 bus and DNs	[2] Custom DN range
		1	2	3	4	5	6			
02	0	on	on	on	on	on	on	211-214	DS30, bus 03 237-252 (2.5 upgrade) **253-268** (new system)	
	1	on	on	off	on	on	on	219-222		
	2	on	off	on	on	on	on	227-230		
	3	on	off	off	on	on	on	235-238		
03	0	on	on	on	on	on	off	181-184	DS30, bus 04 **253-268** (2.5 upgrade) **285-292** (new system)	
	1	on	on	off	on	on	off	189-192		
	2	on	off	on	on	on	off	197-200		
	3	on	off	off	on	on	off	205-208		
04	0	on	on	on	on	off	on	151-154	DS30, bus 05 **269-284** (2.5 upgrade) **317-332** (new system)	
	1	on	on	off	on	off	on	159-162		
	2	on	off	on	on	off	on	167-170		
	3	on	off	off	on	off	on	175-178		
05	0	on	on	on	on	off	off	121-124	DS30, bus 06 **285-300** (2.5 upgrade) **349-364** (new system)	
	1	on	on	off	on	off	off	129-132		
	2	on	off	on	on	off	off	137-140		
	3	on	off	off	on	off	off	145-148		
06	0	on	on	on	off	on	on	91-94	DS30, bus 07[1] **301-316** (2.5 upgrade) **381-396** (new system)	
	1	on	on	off	off	on	on	99-102		
	2	on	off	on	off	on	on	107-110		
	3	on	off	off	off	on	on	115-118		
07[1]								Not supported		

[1] If your system is configured with a 3/5 DS30 split, you cannot configure this module for DS30 6 because DS30 7 is not available for the second level.

[2] The extensions listed are based on a three-digit DN with a Start DN of 221. If your system has longer DNs or a different Start DN, enter the range in the blank column.

ASM 8 and GASM8 switch settings

In a single-density configuration, such as for DS30 6 or 7 when they are set to the default PDD, only offset 1 and 2 are available to ASM 8/GASM8. In a double-density configuration, you can install four GASM8s for each DS30 bus. Table 38 shows the switch settings for each DS30 number and the dialing numbers (DNs) assigned to each DS30 number.

Table 39 ASM 8 settings

Select bus	Select offset	Enter these switch settings 1	2	3	4	5	6	To assign these DNs	Select offset	Enter these switch settings 1	2	3	4	5	6	To assign these DNs	**Custom DN range
	2.5 system upgraded to 3.0								3.0 and newer systems								
2	0	on	on	on	on	on	on	221-228	0	on	on	on	on	on	on	221-228	
	1	on	on	off	on	on	on	229-236	1	on	on	off	on	on	on	229-236	
	2	on	off	on	on	on	on	377-384	2	on	off	on	on	on	on	237-244	
	3	on	off	off	on	on	on	385-392	3	on	off	off	on	on	on	245-252	
3	0	on	on	on	on	on	off	237-244	0	on	on	on	on	on	off	253-260	
	1	on	on	off	on	on	off	245-252	1	on	on	off	on	on	off	261-268	
	2	on	off	on	on	on	off	393-400	2	on	off	on	on	on	off	269-276	
	3	on	off	off	on	on	off	401-408	3	on	off	off	on	on	off	277-284	
4	0	on	on	on	on	off	on	253-260	0	on	on	on	on	off	on	285-292	
	1	on	on	off	on	off	on	261-268	1	on	on	off	on	off	on	293-300	
	2	on	off	on	on	off	on	409-416	2	on	off	on	on	off	on	301-308	
	3	on	off	off	on	off	on	417-424	3	on	off	off	on	off	on	309-316	
5	0	on	on	on	on	off	off	269-276	0	on	on	on	on	off	off	317-324	
	1	on	on	off	on	off	off	277-284	1	on	on	off	on	off	off	325-332	
	2	on	off	on	on	off	off	425-432	2	on	off	on	on	off	off	333-340	
	3	on	off	off	on	off	off	433-440	3	on	off	off	on	off	off	341-348	
6	0	on	on	on	off	on	on	285-292	0	on	on	on	off	on	on	349-356	
	1	on	on	off	off	on	on	293-300	1	on	on	off	off	on	on	357-364	
	2	on	off	on	off	on	on	441-448	2	on	off	on	off	on	on	365-372	
	3	on	off	off	off	on	on	449-456	3	on	off	off	off	on	on	373-380	
7***	0	on	on	on	off	on	off	301-308	0	on	on	on	off	on	off	381-388	
	1	on	on	off	off	on	off	309-316	1	on	on	off	off	on	off	389-396	
	*****2	on	off	on	off	on	off	457-464	*****2	on	off	on	off	on	off	397-404	
	*****3	on	off	off	off	on	off	465-472	*****3	on	off	off	off	on	off	405-412	

** The extensions listed are based on a three-digit DN with a Start DN of 221. If your system has longer DNs or a different Start DN, enter the range in the blank column.

*** If your system is configured with a 3/5 split, DS30 7 is not available.

*****Available only on systems set to double density with a 2/6 DS30 split.

GASM8 mode and country switch settings

The GASM8 has a second set of eight DIP switches on the right side, at the rear of the MBM, that allow you to choose a mode of function, based on country of operation. These settings are dependant on the version of the system software.

The mode used defines which features are available, as shown in Table 40.

Table 40 GASM8 modes and features

GASM8 modes		
Standard	**Enhanced**	**Mode features**
•	•	Basic call features for analog devices
•	•	Message Waiting Indication (MWI)
	•	Firmware download capability
	•	Disconnect Supervision
	•	Calling Line Identification (CLID)

The GASM8 has the following switches:

- Switch 1: firmware download capability
  - — off = Standard mode
  - — on = Enhanced mode
- Switch 2: when to download firmware (for the enhanced mode only)
  - — off = automatic firmware download from BCM (default)
  - — on = forced firmware download from BCM system cold start
- Switch 3: echo cancellation
  - — off = Enabled (default)
  - — on = Disabled
- Switches 4-8: settings choices are based on a country profile. Refer to the tables below for the correct settings to ensure proper functionality.

Standard mode								
Mode select DIP switch settings			**Country select DIP switch settings**					**Country profile**
1	**2**	**3**	**4**	**5**	**6**	**7**	**8**	
off	off	off	off	off	off	off	off	North America
off	off	off	off	off	off	off	on	United Kingdom
off	off	off	off	off	off	on	off	Australia
off	off	off	off	off	off	on	on	Poland

Note: Switch settings not shown in this table will default to the North American profile.

Enhanced mode								
on	off	off	off	off	off	off	off	North America
on	off	off	off	off	off	off	on	United Kingdom
on	off	off	off	off	off	on	off	Australia
on	off	off	off	off	off	on	on	Poland

Note: Switch settings not shown in this table will default to the North American profile.

Table 41 ASM8+ country select DIP switch settings

Manual settings (pre-BCM 3.6 systems)								Country profile	Manual settings (BCM 3.6 and newer systems)							
1	2	3	4	5	6	7	8		1	2	3	4	5	6	7	8
off	off	off	off	off	off	off	off	North America	on	off	off	off	off	off	off	off
off	off	off	off	off	off	off	on	United Kingdom	on	off	off	off	off	off	off	on

DSM switch settings

There are different types of DSMs:

- DSM16/DSM16+ have one connector, which connects to 16 lines (telephones). These modules require a full DS30 number each (single density) or half a bus (double density).
- DSM32/DSM32+ have two connectors, each of which connects to 16 lines (telephones). These modules require two full, consecutive DS30 numbers (single density) or one full bus (double density).

This section includes these charts:

- "DSM16/DSM32 single-density switch settings (upgraded system)" on page 132
- "DSM16+ and DSM 32+ double density switch settings (upgraded system)" on page 133
- "DSM16/DSM 32 single density switch settings (new system)" on page 134
- "DSM16+ and DSM 32+ double density switch settings (new system)" on page 134

DSM16/DSM32 single-density switch settings (upgraded system)

The following table shows the switch settings for DSM modules deployed as single density on a system. For single-density modules, you set the first DS30 number on the DIP switches and the system assigns the next DS30 bus. Note in Table 42 how the DSM32 module spans two DS30 bus numbers and that there are only five possible DS30 settings for the DIP switches.

Note: DSM modules deployed with 2.5 systems are all single density and cannot be set to double density. The DSM 16+ and DSM 32+ modules can be set to either density.

Table 42 DSM16/DSM16+ and DSM32/DSM32+ single-density switch settings (upgraded system)

Select DS30 bus	Enter these switch settings						**To assign these DNs to DSM16 or DSM 16+	To assign these DNs to DSM 32 or DSM 32+
	1	2	3	4	5	6		
2	on	on	on	on	on	on	221-236	221-252 (DS30 2 and 3)
3	on	on	on	on	on	off	237-252	237-268 (DS30 3 and 4)
4	on	on	on	on	off	on	253-268	253-284) (DS30 4 and 5)
5	on	on	on	on	off	off	269-284	269-300 (DS30 5 and 6)
6	on	on	on	off	on	on	285-300	285-316 (DS30 6 and 7)
***7	on	on	on	off	on	off	301-316	N/A

**The extensions listed are based on a three-digit DN with a Start DN of 221. If your system has longer DNs or a different Start DN, enter the range in the blank column.

***If your system is configured with a 3/5 DS30 split, you cannot use DS30 7 for the DSM 16 module. You cannot configure the DSM 32 module for DS30 6 because the second set of DNs cannot be accessed.

DSM16+ and DSM 32+ double density switch settings (upgraded system)

The following table shows the switch settings for DSM-plus modules deployed as double density on a system that has been upgraded from BCM 2.5 to BCM 3.0 or later software.

Note: DSM modules deployed with BCM 2.5 systems are all single density and cannot be set to double density. The DSM 16+ and DSM32+ modules can be set to either density.

Table 43 DSM 16+ and DSM32+ double density switch settings (upgraded system)

Select DS30 bus	Enter these switch settings							*To assign these DNs to DSM 16+: (A= DSM1, B=DSM2)		To assign these DNs to DSM 32+ (connectors: A=top, B = bottom)	
	1	2	3	4	5	6					
2	off	on	on	on	on	on	A	221-236	A	377-392	
	off	on	off	on	on	on	B	377-392	B		221-236
3	off	on	on	on	on	off	A	237-252	A	393-408	
	off	on	off	on	on	off	B	393-408	B		237-252
4	off	on	on	on	off	on	A	253-268	A	409-424	
	off	on	off	on	off	on	B	409-424	B		253-268
5	off	on	on	on	off	off	A	269-284	A	425-440	
	off	on	off	on	off	off	B	425-440	B		269-284
6	off	on	on	off	on	on	A	285-300	A	441-456	
	off	on	off	off	on	on	B	441-456	B		285-300
**7	off	on	on	off	on	off	A	301-316	A	457-472	
	off	on	off	off	on	off	B	457-472	B		301-316

* The extensions listed are based on a three-digit DN with a Start DN of 221. If your system has longer DNs or a different Start DN, enter the range in the blank column.

** If your system is configured with a 3/5 split, you cannot use DS30 7 for the DSM 16 module.

DSM16/DSM 32 single density switch settings (new system)

The following table shows the switch settings for DSM modules deployed as single density on a new system running BCM 3.0 or later software.

Note: DSM modules deployed prior to BCM 3.0 are all single density and cannot be set to double density, but they can still be used on new systems. The DSM 16+ and DSM32+ modules can be set to either density.

Table 44 DSM16/DSM16+ and DSM32/DSM32+ single density switch settings (new system)

Select DS30 bus	Enter these switch settings						*To assign these DNs to DSM 16 or DSM 16+	To assign these DNs to DSM 32 or DSM 32+	
	1	2	3	4	5	6		Top	Bottom
2	on	on	on	on	on	on	221-236	253-268	221-236
3	on	on	on	on	on	off	253-268	285-300	253-268
4	on	on	on	on	off	on	285-300	317-332	285-300
5	on	on	on	on	off	off	317-332	349-364	317-332
6	on	on	on	off	on	on	349-364	381-396	349-364
**7	on	on	on	off	on	off	381-396	N/A	

* The extensions listed are based on a three-digit DN with a Start DN of 221. If your system has longer DNs or a different Start DN, enter the range in the blank column.

**If your system is configured with a 3/5 split, you cannot use DS30 7 for the DSM 16 module. You cannot configure the DSM32 module for DS30 6 because the second set of DNs cannot be accessed.

DSM16+ and DSM 32+ double density switch settings (new system)

The following table shows the switch settings for DSM-plus modules deployed as double density on a new system (BCM 3.0 or later software).

Note: DSM modules deployed prior to BCM 3.0 are all single density and cannot be set to double density, but they can still be used on new systems. The DSM 16+ and DSM32+ modules can be set to either density.

Table 45 DSM 16+ and DSM32+ double density switch settings (new system) (Sheet 1 of 2)

Select DS30 bus	Enter these switch settings							To assign these DNs to DSM 16+: A= DSM1, B=DSM2		To assign these DNs to DSM 32+ (connectors: A=top, B = bottom)	
	1	2	3	4	5	6					
2	off	on	on	on	on	on	A	221-236	A	237-252	
	off	on	off	on	on	on	B	237-252	B		221-236
3	off	on	on	on	on	off	A	253-268	A	269-284	
	off	on	off	on	on	off	B	269-284	B		253-268
4	off	on	on	on	off	on	A	285-300	A	301-316	
	off	on	off	on	off	on	B	301-316	B		285-300

Table 45 DSM 16+ and DSM32+ double density switch settings (new system) (Sheet 2 of 2)

5	off	on	on	on	off	off	A	317-332	A	333-348		
	off	on	off	on	off	off	B	333-348	B		317-332	
6	off	on	on	off	on	on	A	349-364	A	365-380		
	off	on	off	off	on	on	B	365-380	B		349-364	
**7	off	on	on	off	on	off	A	381-396	A	397-412		
	off	on	off	off	on	off	B	397-412	B		381-396	

* The extensions listed are based on a three-digit DN with a Start DN of 221. If your system has longer DNs or a different Start DN, enter the range in the blank column.

** If your system is configured with a 3/5 split, you cannot use DS30 7.

FEM switch settings

The DIP switches on the underside of the FEM are used to turn the six ports on the front of the module on or off. You need to turn a port on for each Norstar expansion module you want to connect to the BCM system. Each port also occupies one full DS30 bus. Therefore, if you have a fully configured, six-module Norstar system to convert, you must turn on all six ports on the FEM, and, therefore, no other module can be installed in the BCM system.

Note: The FEM module only supports connections to the Norstar trunk and station expansion modules.

To turn on a fiber port, set the DIP switch for the corresponding DS30 bus, as shown in Table 46.

For example, if you want to use fiber port 2, turn on DIP switch 2 (DS30 3). After the module is installed, an LED lights beside each active fiber port.

Table 46 shows the switch for each fiber port.

Table 46 FEM switch settings

Choose a port to turn on	Set this switch to turn on the port						This DS30 bus is assigned
	1	2	3	4	5	6	
1	ON						2
2		ON					3
3			ON				4
4				ON			5
5					ON		6
6						ON	7*

* If your system is configured with a 3/5 split, DS30 7 is not available.

Note: If you turn on all six switches, you are using all the DS30 numbers. In this case, the BCM system can support only the FEM module. All other media bays must be empty.

Warning: Do not attempt to turn on ports requiring a DS30 bus that is already in service to another media bay module located on the same BCM system. Doing this results in unpredictable behavior with both modules.

BCM400 expansion gateway MBMs

MBMs are installed in the BCM400 expansion gateway in the same manner as in the BCM400 main unit. Refer to Figure 72 on page 136 and Figure 73 on page 137 for sample MBM layouts using the expansion gateway.

The following rules apply when using a BCM400 expansion gateway:

- All stations must be on the host unit.
- Primary rate interface (PRI) PSTN trunking interfaces must be on the expansion gateway.

If analog modems are deployed as part of the overall customer configuration and intended to share PSTN network access with the normal voice trunks, then an exception to the above rules is required. In this case, analog stations (for example, ASM8+, GASM8, or even ATAs connected to a DSM16/32) must be configured in the expansion gateway to support the modem connections only. Fax machines or other analog telephones must be connected to MBMs on the host system.

Figure 72 BCM400 expansion gateway configuration

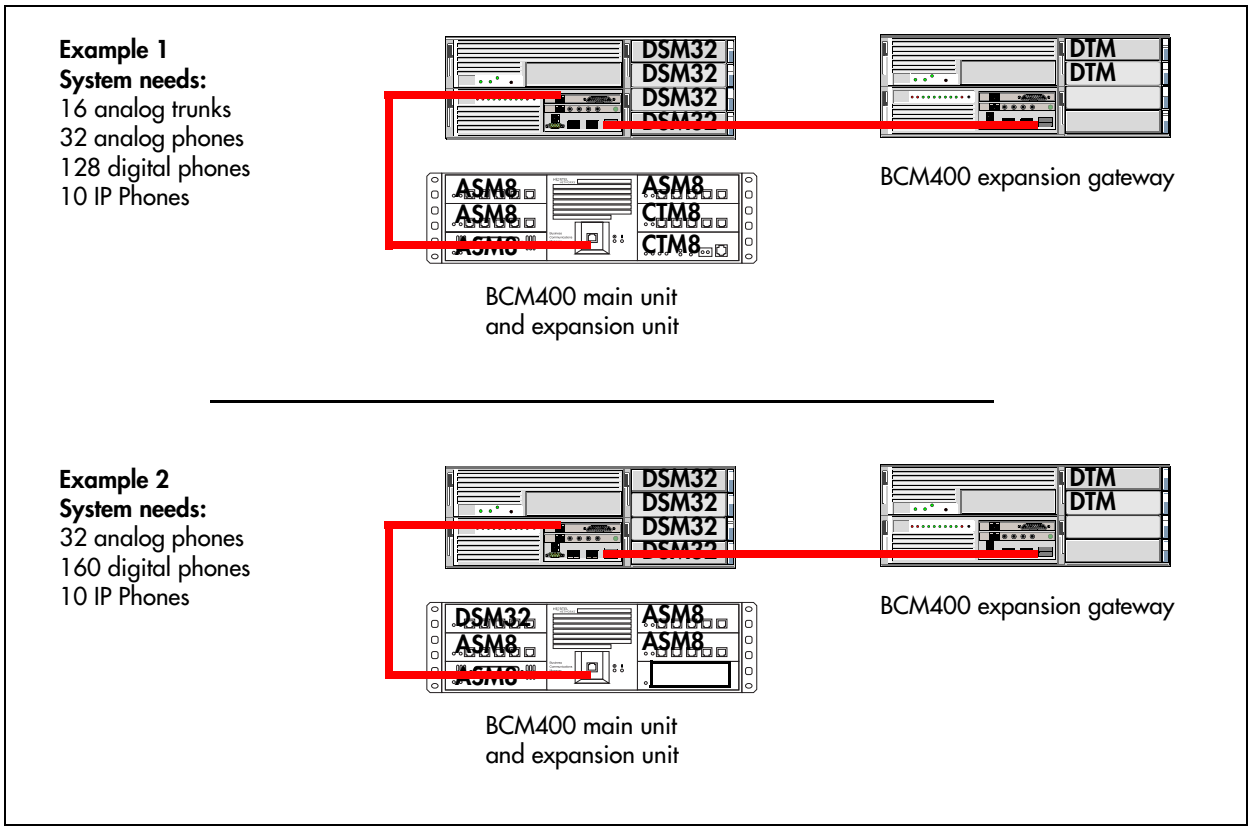

Figure 73 BCM400 expansion gateway configuration

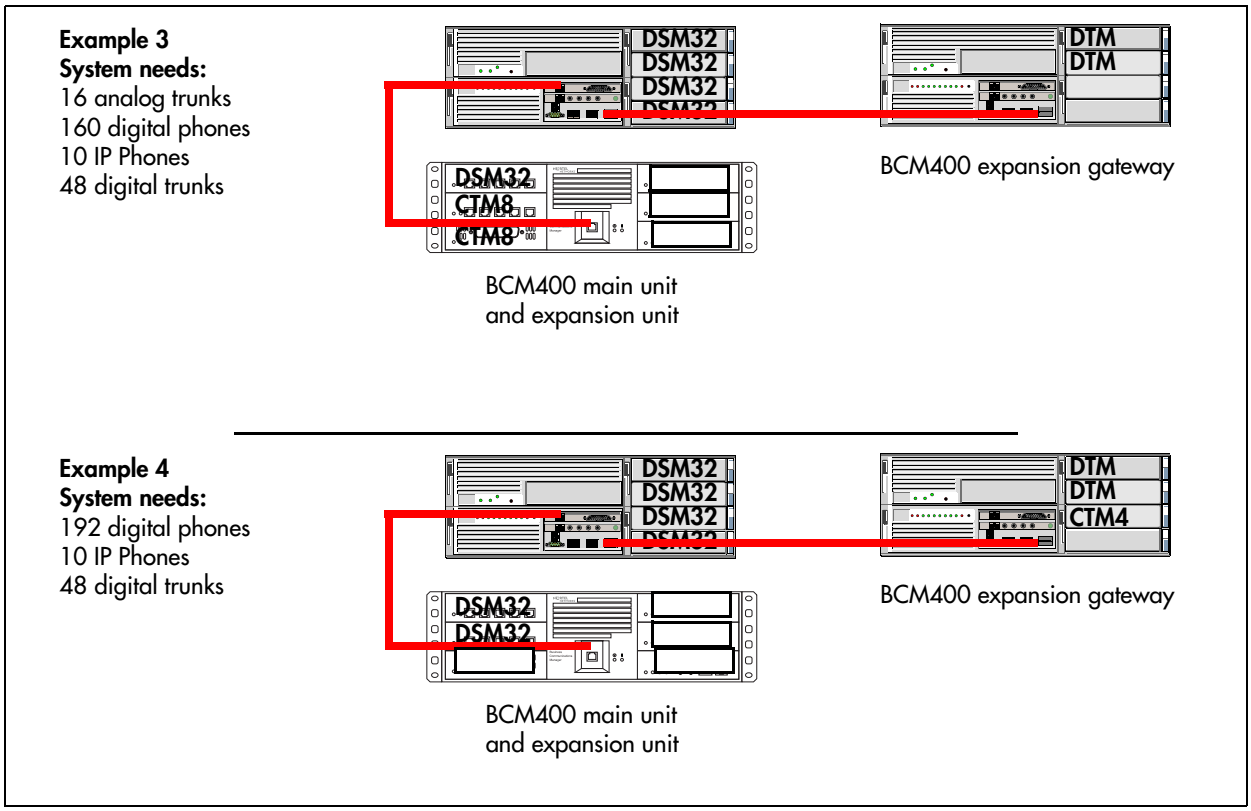

Warning: Ensure you are properly grounded before handling modules or any components that are part of the BCM hardware.

Installing an MBM

After you set the switches on the MBMs, you can install them in the BCM main unit or the expansion unit.

The BCM200 main unit accommodates a maximum of two MBMs. The BCM400 main unit accommodates a maximum of four MBMs. If your BCM400 system requires more than four MBMs, you must connect an expansion unit to the BCM main unit.

Warning: Install DTMs in the BCM main unit only. DTMs do not function if installed in the BCM expansion unit.
If there are no empty MBM bays in the BCM main unit, move MBMs to the expansion unit to provide space for the DTMs.

Note: The number of MBMs you can add varies, depending on the DS30 resources that are available. Refer to Table 25 on page 109.

To install an MBM in the BCM main unit or expansion unit

1. Ensure that the switches on the MBM are set correctly. For information about how to set the switches, refer to "Determining MBM DIP switch settings" on page 118. In the case of FEM modules, the switches activate the front ports. Ensure that the switches accurately reflect the ports you require. Refer to "FEM switch settings" on page 135.
2. Select an open media bay.
3. With the face of the MBM facing toward you, insert the MBM into the open bay.
4. Push the MBM completely into the unit. You will hear a click when the MBM is firmly seated in the media bay.
5. Repeat steps 2 to 4 for each MBM you want to install.

Chapter 9
Connecting the cables

This section describes initial system startup procedures for the BCM system and contains the following information:

- "Connecting power to the BCM system" on page 140
- "Checking system power and status" on page 141
- "Wiring the MBMs" on page 142
- "Setting DNs and port numbers" on page 151
- "MBM combinations" on page 152
- "Changing configurations" on page 156
- "System setup" on page 157
- "Connecting the data networking hardware" on page 157

The BCM main unit and expansion unit are each powered through an AC outlet. The voltage required depends on the geographical location of the units.

All systems are initially set at the factory, based on the intended destination. You must check that the voltage and wiring are correct for your system before you connect any of the units to the power source. Incorrect power settings result in equipment damage.

Read the following warnings. You must protect yourself and the BCM system from possible electrical shocks.

Warning: Use only qualified persons to service the system

The installation and service of this unit must be performed by service personnel with the appropriate training and experience. Service personnel must be aware of the hazards of working with telephony equipment and wiring. They must have experience in techniques that minimize any danger of shock or equipment damage.

Danger: Electrical shock hazards

Electrical shock hazards from the telecommunications network and AC mains are possible with this equipment. To minimize risk to service personnel and users, the BCM system must be connected to an outlet with a third-wire ground. In addition, all unused slots must have blank faceplates installed. The covers on all units must be in place at the completion of any servicing.

Warning: Leakage currents

Service personnel must be alert to the possibility of high leakage currents becoming available on metal system surfaces during power line fault events near network lines. These leakage currents normally safely flow to protective earth ground through the power cord.

System shutdown: You must disconnect the media bay module cables from the system before disconnecting the power cord from a grounded outlet.

System startup: You must reconnect the power cords to a grounded outlet before reconnecting the cables to the media bay modules.

Connecting power to the BCM system

The BCM system is available in North American and International versions. Ensure that the power supply is correct for your location. The BCM200 and BCM400 systems have standard power supplies and redundant power supplies that adjust automatically to the required voltage.

Follow this procedure to check the voltage and wiring, and to power up the system.

To connect power and wiring

1 Check all wiring before connecting power to the BCM units.

Warning: Connecting power

Always connect power to the BCM main unit and expansion unit before you reconnect the cabling to the front of the units.

2 Connect the BCM main unit power cord to an electrical outlet that is a non-switchable, third-wire ground AC outlet.

If you use a power bar, plug the power cords into the power bar and connect the power bar to the AC outlet.

3 Connect the BCM expansion unit power cord to an electrical outlet that is a non-switchable, third-wire ground AC outlet.

Danger: Do not fasten power supply cords

Do not fasten the BCM main unit or expansion unit power supply cords to any building surface.

Checking system power and status

After you connect power to the BCM system, the power LED on the front of the base function tray and expansion unit lights. Once the system services have reactivated, the status LED turns solid green. For further information on LED indicators, see "Viewing the BCM system LEDs" on page 79.

The power LED can indicate RED if the system is in standby mode whereby power is available but shut down by the operating system or Overtemp.

LEDs in position 3 to 8 will flash when the SSM is not communicating (during startup, shutdown, or operating system hang).

Note: During system initialization, the system performs diagnostics on the hardware configuration size and installation. If the power fails, system data remains in memory.

To check system power and status

1. If the base function tray power LED does not light:
   - **a** Disconnect the power cords.
   - **b** Check all cables and power connections. Ensure that the AC outlet has power.
   - **c** Reconnect the power cords.
2. If the power LED is red and there is no power, use a paper clip to select the reset button. Alternatively, power cycle the system to restart.
3. You are now ready to connect the system to the network and initialize it.

Note: You can monitor the state of the BCM system LEDs from your computer.

When the system power is on, and the system has successfully booted, the power and status LEDs on the faceplates of the MBM are lit and remain constant. Figure 74 shows an example of an MBM and the LEDs on the MBM faceplate. Table 47 provides a description of the MBM power and status LED states.

Figure 74 Module power and status LEDs

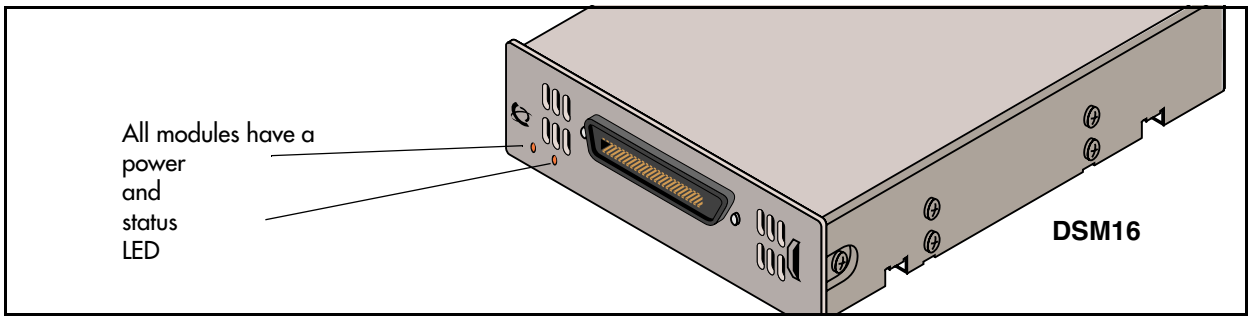

Table 47 Module power and status LED states

LED Label	Description	Green LED On	Green LED Flash	Red LED On (Only)	Green LED Off
	Indicates state of system power	OK	Check for hardware problem with fan, power, or heat inside housing	A minimum of 1 power supply needs attention	No power to the module
	Indicates condition of system status	All monitored services are functioning	In startup/shutdown mode check for problem with MSC wiring	N/A	Not all services are working, MSC may not have started correctly

Wiring the MBMs

This section describes how to wire the cables that connect to the station and trunk MBMs.

- The station MBMs have one or two 50-pin amphenol connectors that require 25-pair cables to connect the MBMs to the equipment in the telephone room where your demarcation point is located. Use a qualified technical professional to ensure the cable wiring and your interior telephone wiring are correct.
- The trunk MBMs connect to central office trunks using RJ-type jacks. However, the GATM4 and GATM8 have a 50-pin amphenol connector that requires a 25-pair cable to connect to the Central Office (CO) trunk. These cables can be supplied by qualified technical personnel to ensure the correct pin-out.

Warning: Qualified persons to service the system

The installation and service of this unit must be performed by service personnel with the appropriate training and experience. Service personnel must be aware of the hazards of working with telephony equipment and wiring. They must have experience in techniques that minimize any danger of shock or equipment damage.

Warning: Leakage currents

Service personnel must be alert to the possibility of high leakage currents becoming available on metal system surfaces during power line fault events on network lines. These leakage currents normally safely flow to protective earth ground through the power cord. However, if the ac power is unplugged prior to disconnecting the cables from the front of the base function tray, this hazard can occur.

System shutdown: You must disconnect the MBM cables from the system before disconnecting the power cord from a grounded outlet.

System startup: You must reconnect the power cords to a grounded outlet before reconnecting the cables to the MBMs.

Danger: Electrical shock hazards

Electrical shock hazards from the telecommunications network and ac mains are possible with this equipment. To minimize risk to service personnel and users, the BCM system must be connected to an outlet with a third-wire ground. In addition, all unused slots must have blank faceplates installed. The covers on all units must be in place at the completion of any servicing.

Warning: Electrical shock warning

The BCM MBMs have been safety approved for installation into BCM main units and expansion units. It is the responsibility of the installer and user to ensure that installation of the BCM hardware does not compromise existing safety approvals.

BEFORE YOU OPEN the BCM main unit or expansion unit, ensure that the network cables are unplugged and the unit is then disconnected from the AC power source.

Station MBMs: The ports on these MBMs are meant to be connected only to approved digital telephones and peripherals with the proper cables on a protected internal wiring system.

Do not connect any telephones to wiring that runs outside of the building.

Read and follow the installation instructions carefully.

Connect the MBMs to service providers

To connect DTM, CTM, CTM8, BRIM S/T, or 4x16 MBMs

1 On the front of the MBM, locate the RJ-48C jack (DTM), RJ-45 jack (BRIM), or the RJ-11 jacks (CTM and 4x16).

2 Wire one end of the cable to the demarcation blocks of the building.

Figure 75 shows the wiring pin-outs for a DTM to connect to a service provider.

Figure 75 DTM RJ-48C wiring array

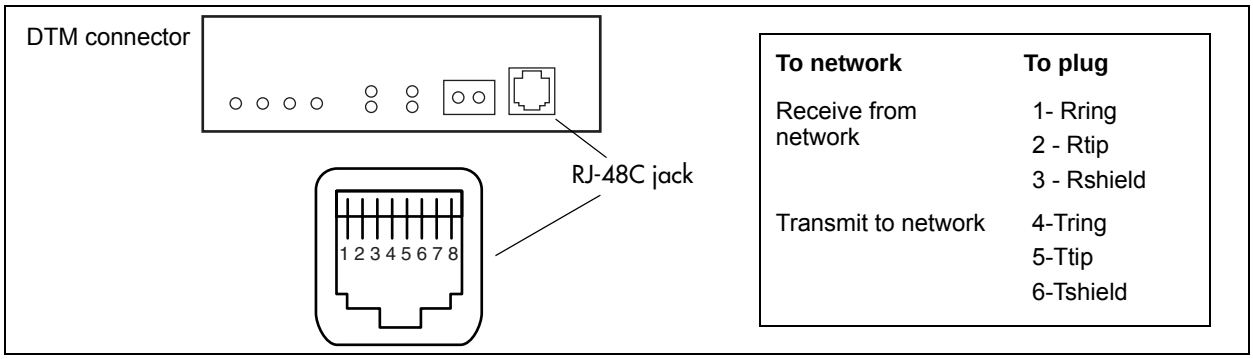

Warning: If you are using a service provider channel service unit (CSU), you must disable the BCM system internal CSU.

Figure 76 shows the wiring pin-out for a CTM4, a CTM8, or the CTM jacks on a 4x16 MBM to connect to the service provider.

All the MBMs have an auxiliary jack (the CTM8 has two). Do not attempt to plug digital equipment into this jack.

Figure 76 CTM RJ-11 wiring array

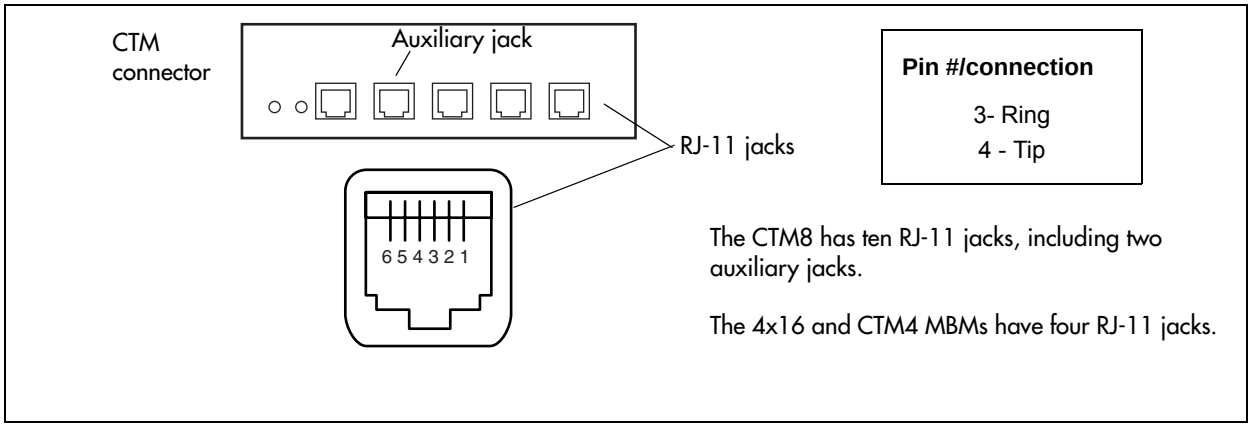

Figure 77 shows the wiring pin-out for a BRIM S/T to the service provider. This diagram also applies to an S-Loop BRI and is capable of having S-Loop devices connected to it (video phones, terminal adapters, group 3 fax machines). The T setting on the BRI Loop is used when connected to the CO or PSTN.

Warning: The BRIM S/T must only be connected to an NT1 provided by the service provider. The NT1 must provide a Telecommunication Network Voltage (TNV) to Safety Extra Low Voltage (SELV) barrier.

Figure 77 BRIM S/T RJ-45 wiring array

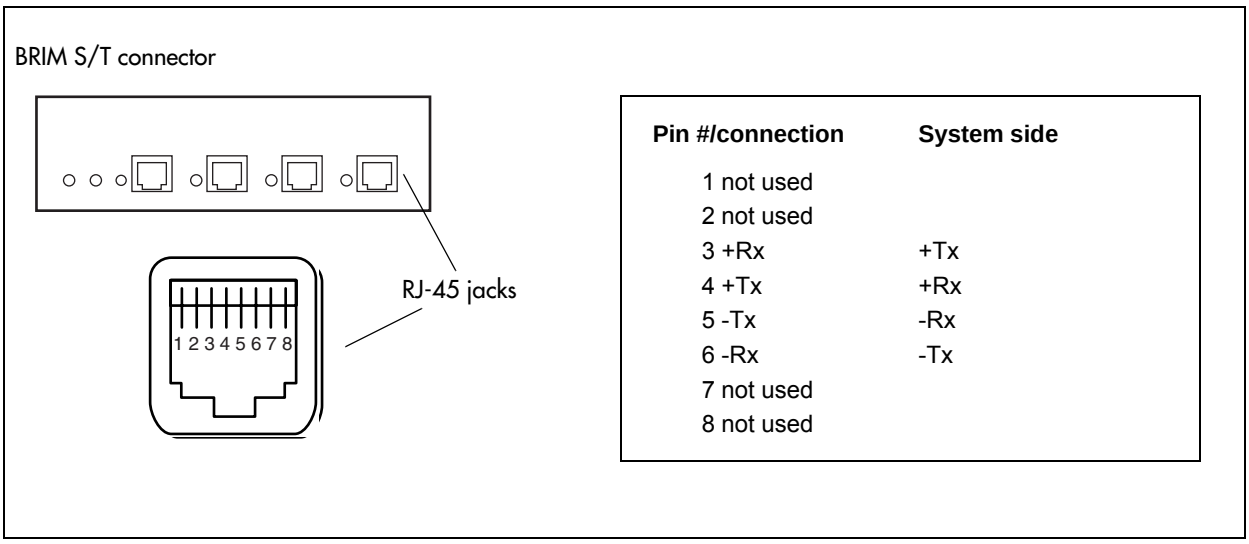

3 Insert the connector into the jack on the MBM.

Refer to the *BCM 4.0 Administration Guide* for steps about changing the default settings for each line or loop.

4 You can now use Element Manager to configure the lines or sets associated with the MBM (see the *BCM 4.0 Administration Guide*).

To connect the GATM

1 On the front of the MBM, locate the amphenol connector.

2 Wire one end of the cable to the demarcation blocks of the building.

Figure 78 on page 146 shows the wiring pin-outs for a GATM to connect to a service provider.

Figure 78 GATM pin-outs

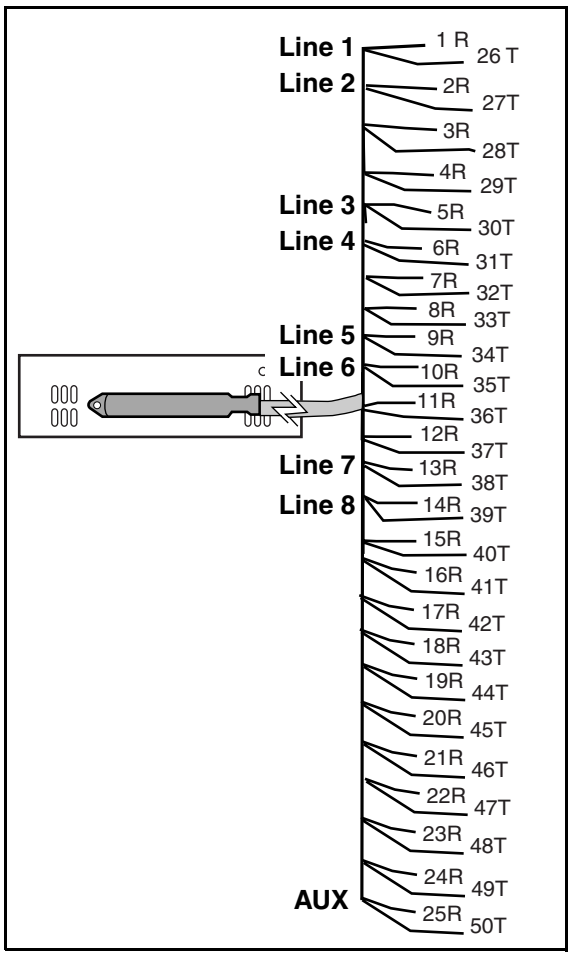

Line	Pin	Wire color	GATM module
1	26	White-Blue	Both
	1	Blue-White	
2	27	White-Orange	Both
	2	Orange-White	
No connection	28/3 29/4		
3	30	White-Slate	Both
	5	Slate-White	
4	31	Red-Blue	Both
	6	Blue-Red	
No connection	32/7 33/8		
5	34	Red-Brown	GATM8
	9	Brown-Red	
6	35	Red-Slate	GATM8
	10	Slate-Red	
No connection	36/11 37/12		
7	38	Black-Green	GATM8
	13	Green-Black	
8	39	Black-Brown	GATM8
	14	Brown-Black	
No connection	40/15 to 49/24		
Aux	50	Violet-Slate	Both
	25	Slate-Violet	

Wiring MBMs to internal connections

After you wire the trunk MBMs, you can install the wiring to the station MBMs. These are the MBMs that connect to the internal telephone sets.

All station MBM wiring uses 25-pair cable with a female amphenol connector at the MBM end.

Note: DSM 32 MBMs require two 25-pair cables.

To connect the DSM16+, DSM32+, ASM8, GASM8, or 4x16 MBMs

1 Wire 16 wire pairs from the amphenol connector to the local connecting blocks so they connect to the 16 station sets you want connected to this MBM.

Note: Use 16 wire pairs from each connector for the DSM 32.

Note: If you are connecting a DSM16+, 4x16, or DSM32+, use Table 48. If you are connecting an ASM8 or GASM8, use Table 49.

Table 48 provides the wiring scheme for the DSM16+, 4x16, and DSM32+ MBMs. The sets heading indicates the set numbering for each of the amphenol pairs. Set DNs are allocated by the BCM system based on the DS30 bus setting on the station MBM.

Table 48 DSM wiring chart

Wiring for DSM 16/16+, 4x16, DSM 32/32+

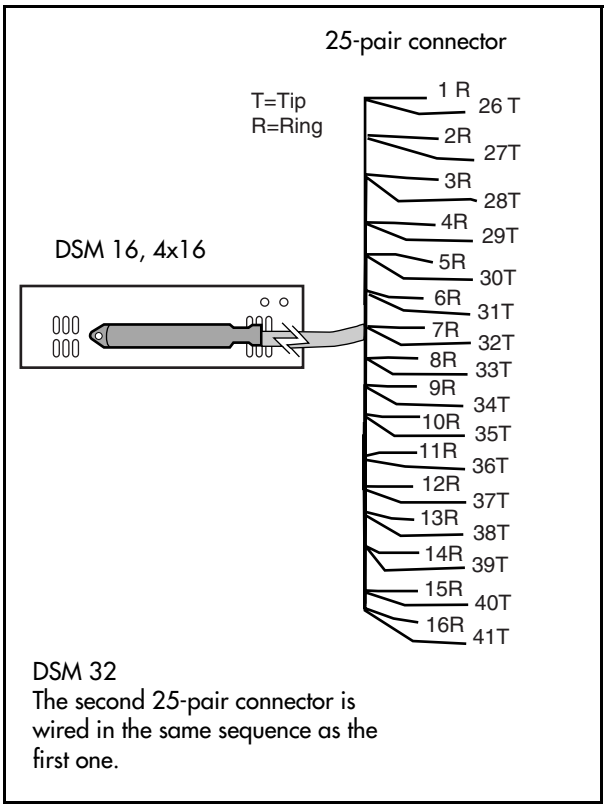

[1] Single connector, or bottom connector on DSM 32/32+ modules.

[2] Upper connector on DSM 32/32+ modules.

Pin	Wire color	Port	[1]Set #	[2]Set #
26	White-Blue	X01	1	17
1	Blue-White	X01	1	17
27	White-Orange	X02	2	18
2	Orange-White	X02	2	18
28	White-Green	X03	3	19
3	Green-White	X03	3	19
29	White-Brown	X04	4	20
4	Brown-White	X04	4	20
30	White-Slate	X05	5	21
5	Slate-White	X05	5	21
31	Red-Blue	X06	6	22
6	Blue-Red	X06	6	22
32	Red-Orange	X07	7	23
7	Orange-Red	X07	7	23
33	Red-Green	X08	8	24
8	Green-Red	X08	8	24
34	Red-Brown	X09	9	25
9	Brown-Red	X09	9	25
35	Red-Slate	X10	10	26
10	Slate-Red	X10	10	26
36	Black-Blue	X11	11	27
11	Blue-Black	X11	11	27
37	Black-Orange	X12	12	28
12	Orange-Black	X12	12	28
38	Black-Green	X13	13	29
13	Green-Black	X13	13	29
39	Black-Brown	X14	14	30
14	Brown-Black	X14	14	30
40	Black-Slate	X15	15	31
15	Slate-Black	X15	15	31
41	Yellow-Blue	X16	16	32
16	Blue-Yellow	X16	16	32
42-40 17-25	no connections			

Table 49 provides the wiring scheme for the eight pairs that connect to the ASM.

Table 49 ASM wiring chart

Wiring for an ASM 8 or GASM8

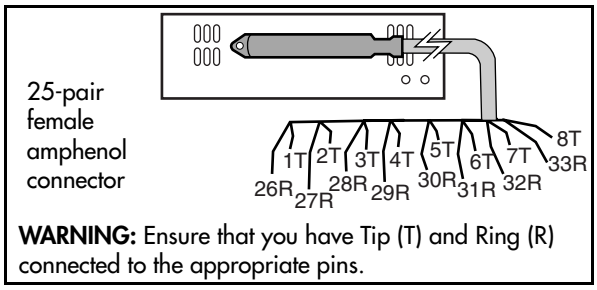

WARNING: Ensure that you have Tip (T) and Ring (R) connected to the appropriate pins.

Pin	Wire color	Port	Set #
26	White-Blue	X01	1
1	Blue-White	X01	1
27	White-Orange	X02	2
2	Orange-White	X02	2
28	White-Green	X03	3
3	Green-White	X03	3
29	White-Brown	X04	4
4	Brown-White	X04	4
30	White-Slate	X05	5
5	Slate-White	X05	5
31	Red-Blue	X06	6
6	Blue-Red	X06	6
32	Red-Orange	X07	7
7	Orange-Red	X07	7
33	Red-Green	X08	8
8	Green-Red	X08	8
34-50	no connection		
9-25			

Note: Refer to "Assigning line and extension numbers" on page 123 to see the relationship between the DS30 channel number and the DNs. Configuration information is included in the *BCM 4.0 Administration Guide*.

2 Install the telephones and peripheral equipment (if it is a new system):

   a Attach the cables for the telephones to the connecting blocks.

   b Install the telephones. Refer to "Installing telephones and peripherals" on page 163.

3 Plug the female amphenol connector into the interface on the front of the MBM.

4 Set up any mobile system you are using.

- Ensure the base stations are correctly installed and connected to the appropriate MBMs on the BCM system. In the case of the Wireless LAN IP telephone system, ensure that the access point is correctly set up to connect to the BCM system LAN or WAN.
- Configure and register the handsets according to the instructions provided for each type of system.

Wiring the FEM

A fiber expansion module (FEM) allows you to upgrade from a Norstar system to a BCM system by reusing the Norstar MBMs. The MBMs connect to the FEM using the same fiber cable that connected them to the Norstar fiber expansion card.

Warning: Handling optical fiber cables

If the cable is too long, ensure that it is coiled correctly using the fiber spool. Coil excess fiber cable carefully around the spool provided. Do not bend the cable around any tight corners. Bends in the fiber cable must not be less than 100 mm in diameter. Place the fiber cable spool into a slot at the back of the cable trough in the Norstar MBM.

To connect the fiber cables

1 Ensure the BCM system is powered up and functional.

2 Connect the fiber cables from the Norstar MBMs to the jacks on the FEM.

Note: The DIP switch settings you chose determine which FEM ports are available. If you enable all six FEM ports, the BCM system has no more DS30 resources available. Therefore, you cannot connect more MBMs to the system.

   a Connect the Norstar Line Modules to the FEM beginning at fiber port 1.

   b Connect Norstar Extension Modules to the FEM beginning at fiber port 6.

3 Change the DN records in Element Manager or change the set wiring, as required, to match your system.

Warning: When you connect a Norstar station MBM to an FEM, the extension numbers of the telephones connected to the station MBM may change. To keep the same extension numbers, you must change the DNs of the telephones or change the telephone wiring to correspond with the required DNs.

Note: If you connect a Norstar station MBM amphenol cable directly to a DSM, you do not have to modify the wiring connections. Ensure you select the correct DS30 number.

Table 50 compares the designated extension numbers on the Norstar and on the BCM systems.

Table 50 Extension comparison chart

Ports	1	2	3	4	5	6	7	8	9	10	11	12	13	14	15	16
DS30 bus 2, FEM port 1																
Norstar	221	222	223	224	225	226	227	228	229	230	231	232	233	234	235	236
BCM	225	226	227	228	221	222	223	224	233	234	235	236	229	230	231	232
DS30 bus 3, FEM port 2																
Norstar	237	238	239	240	241	242	243	244	245	246	247	248	249	250	251	252
BCM	241	242	243	244	237	238	239	240	249	250	251	252	245	246	247	248
DS30 bus 4, FEM port 3																
Norstar	253	254	255	256	257	258	259	260	261	262	263	264	265	266	267	268
BCM	257	258	259	260	253	254	255	256	265	266	267	268	261	262	263	264
DS30 bus 5, FEM port 4																
Norstar	269	270	271	272	273	274	275	276	277	278	279	280	281	282	283	284
BCM	273	274	275	276	269	270	271	272	281	282	283	284	277	278	279	280
DS30 bus 6, FEM port 5																
Norstar	285	286	287	288	289	290	291	292	293	294	295	296	297	298	299	300
BCM	289	290	291	292	285	286	287	288	297	298	299	300	293	294	295	296
DS30 bus 7, FEM port 6																
Norstar	301	302	303	304	305	306	307	308	309	310	311	312	313	314	315	316
BCM	305	306	307	308	301	302	303	304	313	314	315	316	309	310	311	312

Setting DNs and port numbers

The MBM, based on the switch settings, defines which DNs and port numbers can be populated with telephones. If you have changed the default start DN for your system, use Table 51 to identify the DNs and ports for your sets. If you are using the default start DN (221), a completed chart is provided in Table 61 on page 164.

Table 51 Cross-referencing ports and DNs (Sheet 1 of 2)

Pin	Wire color	DS30 bus 2		DS30 bus 3		DS30 bus 4		DS30 bus 5		DS30 bus 6		DS30 bus 7	
26	White-Blue	DN Port 201		DN Port 301		DN Port 401		DN Port 501		DN Port 601		DN Port 701	
1	Blue-White												
27	White-Orange	DN Port 202		DN Port 302		DN Port 402		DN Port 502		DN Port 602		DN Port 702	
2	Orange-White												
28	White-Green	DN Port 203		DN Port 303		DN Port 403		DN Port 503		DN Port 603		DN Port 703	
3	Green-White												

Table 51 Cross-referencing ports and DNs (Sheet 2 of 2)

Pin	Wire color	DS30 bus 2	DS30 bus 3	DS30 bus 4	DS30 bus 5	DS30 bus 6	DS30 bus 7
29	White-Brown	DN Port 204	DN Port 304	DN Port 404	DN Port 504	DN Port 604	DN Port 704
4	Brown-White						
30	White-Slate	DN Port 205	DN Port 305	DN Port 405	DN Port 505	DN Port 605	DN Port 705
5	Slate-White						
31	Red-Blue	DN Port 206	DN Port 306	DN Port 406	DN Port 506	DN Port 606	DN Port 706
6	Blue-Red						
32	Red-Orange	DN Port 207	DN Port 307	DN Port 407	DN Port 507	DN Port 607	DN Port 707
7	Orange-Red						
33	Red-Green	DN Port 208	DN Port 308	DN Port 408	DN Port 508	DN Port 608	DN Port 708
8	Green-Red						
34	Red-Brown	DN Port 209	DN Port 309	DN Port 409	DN Port 509	DN Port 609	DN Port 709
9	Brown-Red						
35	Red-Slate	DN Port 210	DN Port 310	DN Port 410	DN Port 510	DN Port 610	DN Port 710
10	Slate-Red						
36	Black-Blue	DN Port 211	DN Port 311	DN Port 411	DN Port 511	DN Port 611	DN Port 711
11	Blue-Black						
37	Black-Orange	DN Port 212	DN Port 312	DN Port 412	DN Port 512	DN Port 612	DN Port 712
12	Orange-Black						
38	Black-Green	DN Port 213	DN Port 313	DN Port 413	DN Port 513	DN Port 613	DN Port 713
13	Green-Black						
39	Black-Brown	DN Port 214	DN Port 314	DN Port 414	DN Port 514	DN Port 614	DN Port 714
14	Brown-Black						
40	Black-Slate	DN Port 215	DN Port 315	DN Port 415	DN Port 515	DN Port 615	DN Port 715
15	Slate-Black						
41	Yellow-Blue	DN Port 216	DN Port 316	DN Port 416	DN Port 516	DN Port 616	DN Port 716
16	Blue-Yellow						

MBM combinations

This section describes some combinations of trunk and station MBMs to demonstrate how to fit the MBMs into the DS30 resources. These configurations are meant to help demonstrate how your system can be configured using the information in this guide and do not necessarily reflect real-life configurations.

Combining CTMs/GATMs and 4x16s

The 4x16 combination MBM is a combination of a CTM4 and a DSM16. A maximum of four CTM4s/GATM4s can fit into a DS30 bus when each is given a different offset. Therefore, you can combine a maximum of three CTM4s/GATM4s with a 4x16 MBM. This configuration would occupy two full DS30 buses.

You can install a maximum of three of the above combinations in a BCM system with an expansion unit added to it. Table 52 demonstrates this configuration of CTMs and 4x16 MBMs, including the switch settings for each MBM.

Table 52 CTMs/GATMs combined with 4x16 MBMs

Each heavily-outlined and shaded square represents one module				Switch setting					
DS30 #	**2 4x16s offset 3**	**4 CTM4s/GATM4s offset 0, 1 and 2**	**1 CTM8/GATM8 offset 2**	**1**	**2**	**3**	**4**	**5**	**6**
2		0	CTM/GATM settings:	on	on	on	on	on	on
		1	CTM/GATM settings:	on	on	off	on	on	on
		2	CTM/GATM settings:	on	off	on	on	on	on
	3	Switch settings for 4x16:		on	off	off	on	on	on
3									
4		0	CTM/GATM settings:	on	on	on	on	off	on
			2	on	on	off	on	off	on
				on	off	on	on	off	on
	3	Switch settings for 4x16:		on	off	off	on	off	on
5									

Fully-loaded setup

This section describes a system containing one DSM 32/32+, one DSM 16/16+, two ASM 8s, and two DTMs. This configuration uses all the DS30 buses, with the exception of two offsets.

Table 53 demonstrates this combination, including the switch settings for each MBM.

Table 53 DSM combined with 2 DTMs and 2 ASMs

DS30 channel #	Each heavily-outlined and shaded square represents one module				Switch setting					
	1 DSM32/32+ offset 0	1 DSM16/16+ offset 0	2 ASM8s/ GASM8 offset 0 and 1	2 DTMs offset 0	1	2	3	4	5	6
2	0	DSM 32 settings:			on	on	on	on	on	on
3										
4		0	DSM 16 settings:		on	on	on	on	off	on
5			0	ASM 8 settings:	on	on	on	on	off	off
			1	ASM 8 settings:	on	on	off	on	off	off
6				0	on	on	on	off	on	on
7				0	on	on	on	off	on	off

Table 54 demonstrates either a double-density system.

Table 54 All station MBMs set for double density

DS30 channel #	Each heavily-outlined and shaded square represents one module				Switch setting					
	1 DSM32+ offset 0	1 DSM16+ offset 0	2 ASM8s/ GASM8 offset 0 and 1	2 DTMs offset 0	1	2	3	4	5	6
2	0	DSM 32+ settings:			off	on	on	on	on	on
3	0	DSM 32+ settings:			off	on	on	on	on	off
4		0	DSM 16+ settings:		off	on	on	on	off	on
		0	DSM 16+ settings:		off	on	off	on	off	on
5			0	ASM 8 settings:	on	on	on	on	off	on
			1	ASM 8 settings:	on	on	off	on	off	on
			0	ASM 8 settings:	on	off	on	on	off	on
			1	ASM 8 settings:	on	off	off	on	off	on
6				0	on	on	on	off	on	on
7				0	on	on	on	off	on	off

DECT combinations

This section describes a system containing a DECT MBM, three BRIM MBMs, and two DSM 32s. This configuration uses all the DS30 channels, with the exception of one offset.

Table 55 demonstrates this combination, including the switch settings for each MBM.

Table 55 Three BRI modules, two DSM 32s, and one DECT module

DS30 channel #	Each heavily-outlined and shaded square represents one module			Switch setting						
	1 DECT offset 0	3 BRI offset 0, 1 and 2	2 DSM32s offset 0	1	2	3	4	5	6	
2			0	on	on	on	on	on	on	
3										
4			0	on	on	on	on	off	on	
5										
6	0	DECT switch settings:		on	on	off	on	on	on	
7		0	BRI settings	on	on	on	off	on	off	
		1	BRI settings	on	on	off	off	on	off	
		2	BRI settings	on	off	on	off	on	off	

Changing configurations

Here are some points to consider when changing modules in existing or new BCM systems:

- Trunk and analog station MBMs cannot share a DS30 bus.
- MBMs that require more than one DS30 bus automatically assign the next bus in chronological order. Therefore, if an existing installed MBM uses either of the required DS30 buses, remove the installed MBM. You must then assign the DIP switches for both MBMs so there is no conflict between them or with any other installed MBM.

- The goal is to have a balanced mix of trunk and station MBMs.
- Write the DIP switch settings for each module in a place that is handy to reference when you decide to change or add MBMs.
- If you update your Norstar system to a BCM system, your station amphenol connectors can be connected into the MBMs without adjustment. Trunk connectors must be converted to RJ-11 (CTM) or RJ-45 (BRI) connectors. However, if you use the FEM to connect your Norstar MBMs to the BCM system, the station wiring must be adjusted. Refer to "Wiring the FEM" on page 150.

System setup

Use Table 56 to make a note of your basic system setup. Post this page near the BCM hardware for future reference.

Table 56 System setup summary

	DS30 bus 2	DS30 bus 3	DS30 bus 4
Media bay module			
Dip switch setting			
Line/set type			
Line/Loop/DN range			

	DS30 bus 5	DS30 bus 6	DS30 bus 7
Media bay module			
Dip switch setting			
Line/set type			
Line/Loop/DN range			

Connecting the data networking hardware

This section describes how to connect network cards to the BCM system.

Warning: Check with your network administrator before you connect the BCM system to the network to ensure there are no IP address conflicts.

The default address for the BCM system is:

- IP address:10.10.10.1
- Subnet: 255.255.255.0

If the default IP address will create a network conflict, you must change the IP address of the BCM system before you connect any network connections.

To change the IP address outside of a network, you can use a computer and an Ethernet crossover cable or a terminal and a null modem cable.

Refer to "Using the Ethernet crossover cable" on page 180 or "Connecting through the serial port" on page 181 for detailed instructions about connecting to the BCM system.

Connecting the cards

The data networking hardware (MSC) is installed in the BCM main unit at the factory. All systems have dual embedded Ethernet interfaces. Some models come with an embedded V.92 modem. WAN cards and modems are ordered separately. Figure 79 shows a BCM200 configuration with a field-installed WAN card.

Figure 79 Main unit ports and connectors

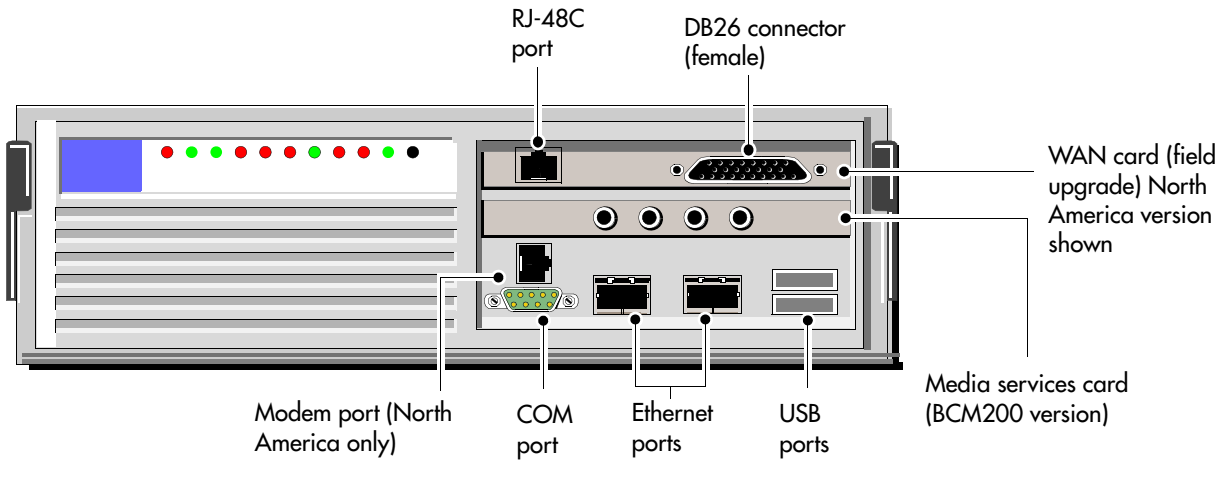

Warning: Do not plug the WAN or modem cables into the system unless it is running.

For maintenance shutdowns, refer to "Performing a system shutdown" on page 233).

To connect the BCM system to the WAN

1 Ensure the system is powered up before connecting this cable.

2 Do one of the following:

- To connect the WAN card using the RJ-48C connector, insert the wide area network (WAN) cable into the RJ-48C jack on the WAN card (see Figure 79 on page 158).
- To connect the WAN card using the DB26 connector, use an adapter cable to connect the wide area network (WAN) cable to the DB26 connector on the WAN card. These adapter cables are available from your BCM supplier (see Figure 79 on page 158).

Table 57 shows the wire connections for a DB26 adapter cable.

Table 57 DB26 adapter cable

DB26 on WAN card	Signal	DB26 cable
1	Chassis Ground	1
2	Transmit Data	2
3	Receive Data	3
4	Request to Send	4
5	Clear to Send	5
6	Data Set Ready	6
7	Signal Ground/ Common Return	7
8	Data Carrier Detect	8
9		9
10		10
11		11
12		12
13		13
14		14
15	Transmit Clock	15
16		16
17	Receive Clock	17
18		18
19		19
20	Data Terminal Ready	20
21		21
22		22
23		23
24	External Clock	24
25		25
26		

To connect the modem

1 Ensure the system is powered up before connecting this cable.

2 Insert a PSTN line into the line jack on the modem interface (see Figure 79 on page 158).

Table 58 shows the wire connections for a RS-422/EIA 530 cable.

Table 58 RS-422/EIA 530 adapter cable (Sheet 1 of 2)

DB26 on WAN card	Signal	RS-422/EIA 530 cable
1	Protective Ground	1
2	Transmit Data A	2
14	Transmit Data B	14
15	Transmit Clock A	15

Table 58 RS-422/EIA 530 adapter cable (Sheet 2 of 2)

DB26 on WAN card	Signal	RS-422/EIA 530 cable
3	Receive Data A	3
4	Request to Send A	4
5	Clear to Send A	5
6	Data Set Ready A	6
7	Signal Ground	7
8	Data Carrier Detect A	8
9	Receive Clock B	9
10	Data Carrier Detect B	10
11	External Clock B	11
12	Transmit Clock B	12
13	Clear To Send B	13

DB26 on WAN card	Signal	RS-422/EIA 530 cable
16	Receive Data B	16
17	Receive Clock A	17
18		18
19	Request To Send B	19
20	Data Terminal Ready A	20
21		21
22	Data Set Ready B	22
23	Data Terminal Ready B	23
24	External Clock A	24
25		25
26		

Table 59 shows the wire connections for a V.35 adapter cable.

Table 59 V.35 adapter cable

DB26 on WAN card	Signal	V.35 cable
1	Protective Ground	A
2	Transmit Data A	P
3	Receive Data A	R
4	Request to Send	C
5	Clear to Send	D
6	Data Set Ready	E
7	Signal Ground	B
8	Data Carrier Detect	F
9	Receive Clock B	X
10		
11	External Clock B	W
12	Transmit Clock B	AA
13		

DB26 on WAN card	Signal	V.35 cable
14	Transmit Data B	S
15	Transmit Clock A	Y
16	Receive Data B	T
17	Receive Clock A	V
18		
19		
20	Data Terminal Ready	H
21		
22		
23		
24	External Clock A	U
25		
26		

Table 60 shows the wire connections for a DB15 X.21 adapter cable.

Table 60 DB15 X.21 adapter cable

DB26 on WAN card	Signal	DB15 X.21 cable
1	Chassis Ground	1
2	Transmit Data A	2
3	Receive Data A	4
4	Request to Send A	3
5	Clear to Send A	5
6		
7	Signal Ground	8
8		
9	Receive Clock B	13
10		
11	External Clock B	14
12		
13	Clear To Send B	12

DB26 on WAN card	Signal	DB15 X.21 cable
14	Transmit Data B	9
15		
16	Receive Data B	11
17	Receive Clock A	6
18		
19	Request To Send B	10
20		
21		
22		
23		
24	External Clock A	7
25		
26		

Installing the cards

Refer to "Replacing data cards and processing hardware" on page 301 for the removal and installation process for these cards.

Chapter 10
Installing telephones and peripherals

This section describes how to install telephones and peripherals.

You can add telephones and peripherals before or after you initialize your system. Telephone configuration is determined by which station media bay module (MBM) you are using.

The BCM system creates default settings for the telephone DN records when it is first initialized. The settings are based on which telephony profile you chose. To change these settings, use Element Manager. Specific instructions for configuring telephone operation through Element Manager are contained in the *BCM 4.0 Device Configuration Guide*.

Note: For detailed information on installing various telephones and peripherals, refer to the documentation for your particular telephone or peripheral.

Note: Programming occurs on the telephone when the BCM system recognizes the telephone on the system.

Refer to the following sections for information on installing telephones and peripherals:

- "System telephones"
- "Installing an emergency telephone" on page 167
- "Installing IP Phones" on page 167
- "Installing T7406 cordless systems" on page 167

System telephones

The BCM system supports a number of analog, digital, IP telephony, and cordless telephones. Refer to "Telephones and adapters" on page 74 for more information on supported telephones.

Analog telephones are supported either through the analog station ports on the main unit or analog station MBMs (ASM), or by connecting to a digital module through an analog terminal adapter 2 (ATA2).

Documentation describing installation and telephone features is supplied with each piece of equipment.

Analog terminal adapter 2

The analog terminal adapter 2 (ATA2) connects a standard analog voice device or data communication device to a digital station connector on the BCM system.

Refer to Chapter 11, “Installing the analog terminal adapter,” on page 169 for the requirements and procedure for installing the device.

Central Answering Position (CAP/eCAP)

A Central Answering Position (CAP) provides additional auto-dial positions or additional line appearances.

A 7316E telephone can support up to 9 OKIMs. Each module provides 24 programmable keys with indicators. A telephone can be configured as an eCAP, which allows it to support line appearances on the KIM buttons. If the telephone is configured as an eCAP, a maximum of four KIMs can be added (eKIMs). A T7316E/KIM configuration that is not configured as an eCAP can support up to nine KIMs. In this configuration, only memory button programming is supported. A supplementary power supply is required after the fifth KIM is added.

Note: Programming

The T7316E+eKIM does not support auto-dial keys programmed with Hunt group DNs.

Refer to the CAP user card for instructions about using a CAP. For more information, refer to the *BCM 4.0 Device Configuration Guide*.

Telephone port and DN cross-reference

The media bay module that analog and digital telephones connect to dictates DNs and port numbers. Use Table 61 and Table 62 to identify which port connects to each telephone. For future reference, put a check mark beside the ports where there are telephones installed.

Note: The following table is based on a system with three-digit DNs and a start DN of 221. If your system has longer DNs, the system automatically adds a repeat of the first digit for each additional DN length unit; for example, 221 becomes 2221.

Also, note on the following tables that DN numbering differs between systems that were upgraded from BCM 2.5 software and systems that were new with BCM 3.0 or newer software.

Table 61 Cross-referencing ports and DNs on a 2.5 system upgraded to 3.0 or newer software

Pins	Port*	DS 30 bus 02 DNs	DS 30 bus 03 DNs	DS 30 bus 04 DNs	DS 30 bus 05 DNs	DS 30 bus 06 DNs	DS 30 bus 07 DNs
26/1	X01	221	237	253	269	285	301
27/2	X02	222	238	254	270	286	302
28/3	X03	223	239	255	271	287	303
29/4	X04	224	240	256	272	288	304
30/5	X05	225	241	257	273	289	305
31/6	X06	226	242	258	274	290	306
32/7	X07	227	243	259	275	291	307
33/8	X08	228	244	260	276	292	308
34/9	X09	229	245	261	277	293	309
35/10	X10	230	246	262	278	294	310
36/11	X11	231	247	263	279	295	311
37/12	X12	232	248	264	280	296	312
38/13	X13	233	249	265	281	297	313
39/14	X14	234	250	266	282	298	314
40/15	X15	235	251	267	283	299	315
41/16	X16	236	252	268	284	300	316
Second-level DNs (DS 30 bus set to Double Density)							
Pins	Port*	DS 30 bus 02 DNs	DS 30 bus 03 DNs	DS 30 bus 04 DNs	DS 30 bus 05 DNs	DS 30 bus 06 DNs	DS 30 bus 07 DNs
26/1	X17	377	393	409	425	441	457
27/2	X18	378	394	410	426	442	458
28/3	X19	379	395	411	427	443	459
29/4	X20	380	396	412	428	444	460
30/5	X21	381	397	413	429	445	461
31/6	X22	382	398	414	430	446	462
32/7	X23	383	399	415	431	447	463
33/8	X24	384	400	416	432	448	464
34/9	X25	385	401	417	433	449	465
35/10	X26	386	402	418	434	450	466
36/11	X27	387	403	419	435	451	467
37/12	X28	388	404	420	436	452	468
38/13	X29	389	405	421	437	453	469
39/14	X30	390	406	422	438	454	470
40/15	X31	391	407	423	439	455	471
41/16	X32	392	408	424	440	456	472
* For each port, substitute the X for the DS30 bus number. Example: Port X01 on DS30 bus 02 is port 0201.							

Table 62 Cross-referencing ports and DNs on a new version 3.0 or newer system

Pins	Port*	DS 30 bus 02 DNs	DS 30 bus 03 DNs	DS 30 bus 04 DNs	DS 30 bus 05 DNs	DS 30 bus 06 DNs	DS 30 bus 07 DNs
26/1	X01	221	253	285	317	349	381
27/2	X02	222	254	286	318	350	382
28/3	X03	223	255	287	319	351	383
29/4	X04	224	256	288	320	352	384
30/5	X05	225	257	289	321	353	385
31/6	X06	226	258	290	322	354	386
32/7	X07	227	259	291	323	355	387
33/8	X08	228	260	292	324	356	388
34/9	X09	229	261	293	325	357	389
35/10	X10	230	262	294	326	358	390
36/11	X11	231	263	295	327	359	391
37/12	X12	232	264	296	328	360	392
38/13	X13	233	265	297	329	361	393
39/14	X14	234	266	298	330	362	394
40/15	X15	235	267	299	331	363	395
41/16	X16	236	268	300	332	364	396
Second-level DNs (DS 30 bus set to Double Density)							
Pins	Port*	DS 30 bus 02 DNs	DS 30 bus 03 DNs	DS 30 bus 04 DNs	DS 30 bus 05 DNs	DS 30 bus 06 DNs	DS 30 bus 07 DNs
26/1	X17	237	269	301	333	365	397
27/2	X18	238	270	302	334	366	398
28/3	X19	239	271	303	335	367	399
29/4	X20	240	272	304	336	368	400
30/5	X21	241	273	305	337	369	401
31/6	X22	242	274	306	338	370	402
32/7	X23	243	275	307	339	371	403
33/8	X24	244	276	308	340	372	404
34/9	X25	245	277	309	341	373	405
35/10	X26	246	278	310	342	374	406
36/11	X27	247	279	311	343	375	407
37/12	X28	248	280	312	344	376	408
38/13	X29	249	281	313	345	377	409
39/14	X30	250	282	314	346	378	410
40/15	X31	251	283	315	347	379	411
41/16	X32	252	284	316	348	380	412
* For each port, substitute the X for the DS30 bus number. Example: Port X01 on DS30 bus 02 is port 0201.							

Installing an emergency telephone

You can use the emergency telephone to make calls when there is no power to the BCM system.

To install an emergency telephone on the BCM system, connect a single line analog telephone to the auxiliary port on the CTM/GATM. When you make a call from the emergency telephone, the auxiliary port uses the telephone line connected to the line 1 port of the CTM/GATM.

Tip: You can connect an emergency telephone to every CTM installed on your BCM system.

To install the emergency telephone

1. Connect a single line analog telephone to the auxiliary port on the CTM.
2. Connect an analog PSTN line cable to the line 1 port of the CTM.

Installing IP Phones

The system can be set to automatically assign DNs to the Nortel IP Phones. If you choose to manually assign DNs, choose DNs from unused DNs in the digital range. However, port numbers are assigned from DS30 01 (ports 0101-0132) first; then from DS30 08, if there are ports available, and DS30 07 if the system is running a 3/5 DS30 split. If no ports are available on those DS30 blocks, the system may assign digital set port numbers. Also ensure that you do not assign DNs that are assigned to Call Center mailboxes (CDNs).

Installing the mobility systems

The radio-based mobility systems all have their own documentation that describes the hardware and installation and activation of the handsets.

- Digital Mobility system: The BCM main unit can support a maximum of two digital mobility controllers (DMC), which act as the call processing unit between the BCM main unit and the digital mobility base stations and handsets. The DMCs have a one-to-one connection with digital ports on the BCM main unit.

  For installation and configuration details, refer to the *Digital Mobility Installation and Configuration Guide*.

Installing T7406 cordless systems

The T7406 cordless system consists of a base station that connects up to three digital station ports on the BCM system, providing a radio interface for three cordless handsets. The cordless handsets register to the base station, which transfers the call over the telephone lines connected to the system. The handsets are configured to emulate the T7316/M7310 telephone features. This system is most suited for small to medium-sized office environments that are set up in an open fashion.

T7406 cordless telephones use the DNs for the ports on the station module that is connected to the base station. They are digital sets and use M7310/T7316 as an operational model.

Moving telephones

You can move a BCM digital telephone to a new location within the system without losing its programmed settings, if the telephone has been enabled with Set relocation (automatic telephone relocation). When you enable Set relocation, the internal numbers, auto-dial settings, and personal speed dial codes remain with the telephone when you disconnect the telephone.

If you connect a different telephone to the jack before you reconnect the moved telephone, the new telephone takes the programmed settings. The BCM system can no longer identify the old telephone.

After you plug a moved set into a new jack, the BCM system can take 45 seconds to identify the telephone. Programming relocation takes 3 minutes to complete. Wait for this to occur before you change any settings for the telephone in the system.

Warning: If you disconnect a relocated telephone before the relocation programming is complete, the telephone can lose the programmed settings.

Note: Automatic telephone relocation is disabled by default.

For IP telephones to retain DN-specific features, the Keep DN Alive setting for the telephone programming must be set to Yes.

Chapter 11
Installing the analog terminal adapter

This section provides installation instructions for the analog terminal adapter 2 (ATA2) or ATA.

The ATA2 connects a standard analog voice device or data communication device to the BCM system through a digital station module. Examples of analog voice devices are analog telephones and answering machines. Examples of analog data communication devices are modems and fax machines.

The ATA2 is designated as either an ONS (on-premise station) or an OPS (off-premise station) port.

Refer to the following sections for information on installing an ATA2:

- "Configuration overview"
- "Installing the ATA2" on page 170
- "Configuring the ATA2" on page 174

Refer to Table 10 for ATA2 specifications.

Configuration overview

This section describes environment configurations for connecting analog and data devices to the main unit using an ATA2:

- "Analog telephone"
- "Analog data device" on page 170

Analog telephone

Figure 80 on page 170 shows an installation overview for connecting an analog device through an ATA2 to the main unit.

Figure 80 Analog telephone installation overview

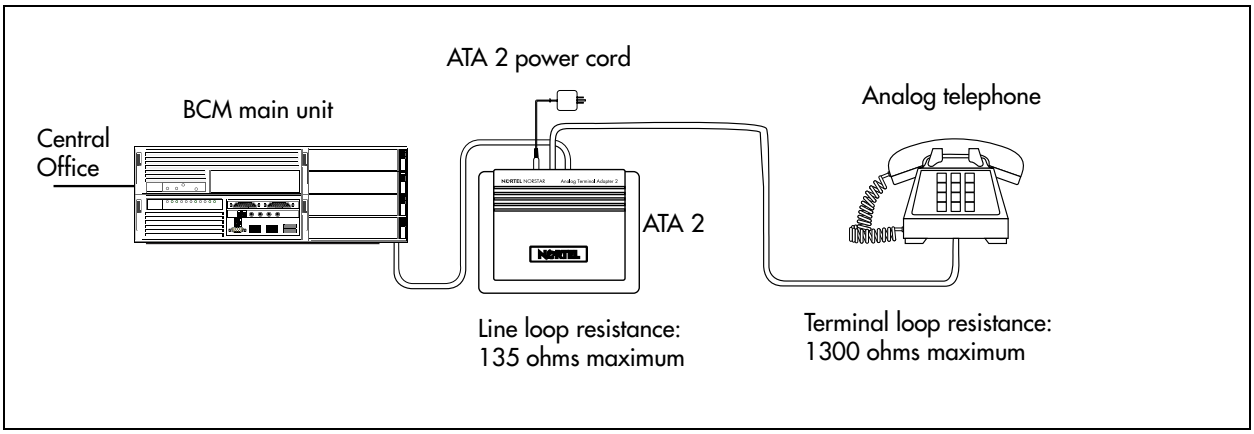

Analog data device

The ATA2 connects a standard analog data device, such as a fax or modem, to the BCM system.

Figure 81 shows an installation overview for connecting a data communication device through an ATA2 to the BCM system.

Figure 81 Data communication device installation overview

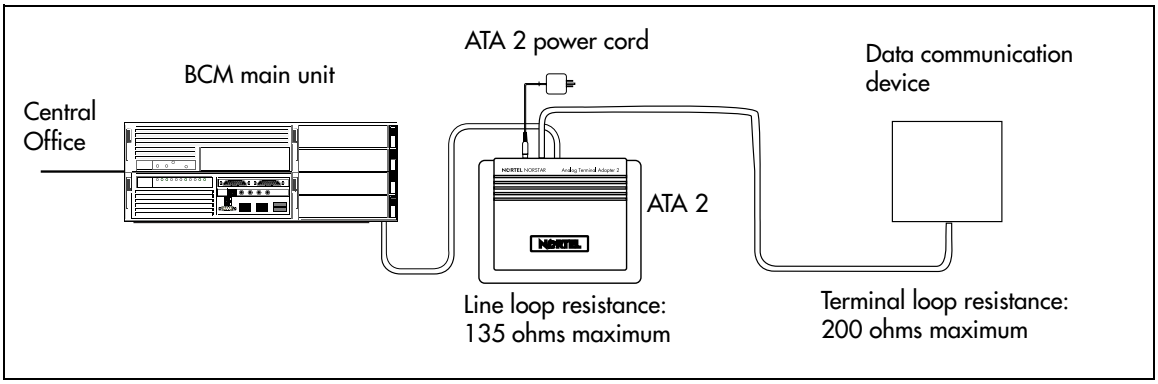

Installing the ATA2

This section provides information on installing the ATA2:

- "Connecting the ATA2"
- "Mounting the ATA2" on page 171
- "Test insertion loss measurement" on page 172

Connecting the ATA2

After the correct environment has been set up, connect the BCM system and the analog device to the ATA2 and then connect the power (see Figure 82).

Figure 82 ATA2 top view

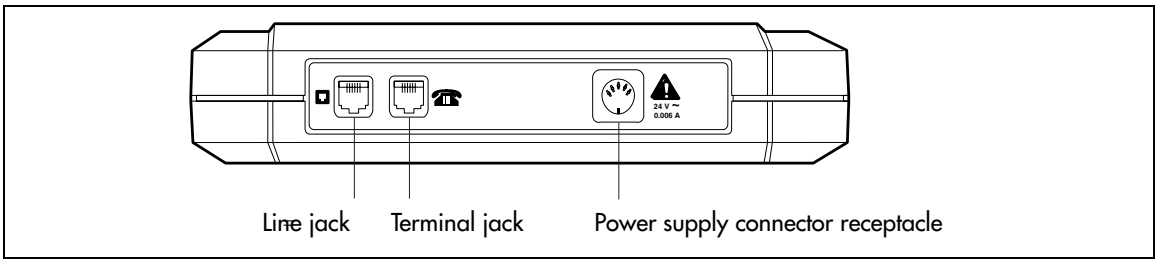

Figure 83 shows the pin-outs for the connection cables.

Figure 83 ATA2 pin-outs

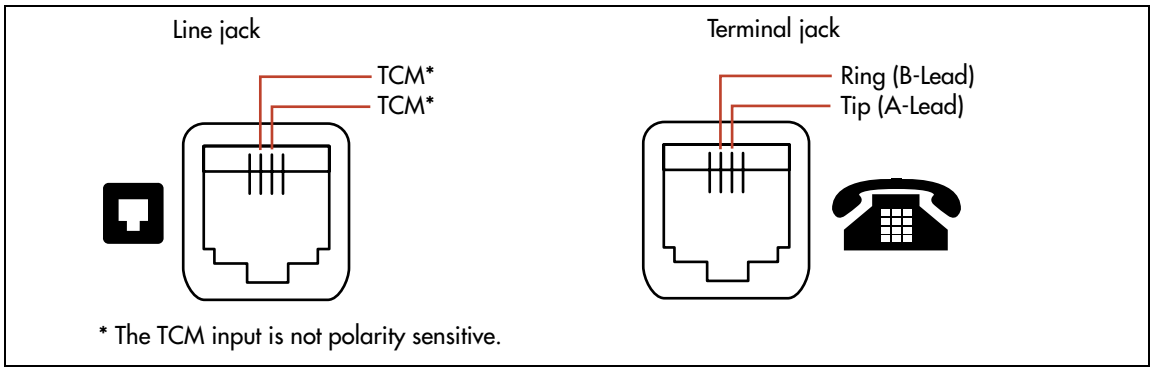

To connect the ATA2

1. Connect one end of a line cord to the ATA2 terminal jack.
2. Connect the other end to your telephone, modem, or fax machine.
3. Connect one end of a line cord to the ATA2 line jack.
4. Connect the other end to an available station port on the BCM main unit or expansion unit.
5. For a 120 V or 230 V system, plug the DIN connector of the power supply cord into the power supply connector receptacle. Plug the adapter into a standard AC outlet.

Caution: In North America, the ATA2 must be powered from a Class 2 power source that is UL- and CSA-approved.

In Europe, the ATA2 must be powered from a Class II power source that is CE marked.

Mounting the ATA2

After the ATA2 is correctly connected, you can mount the unit on a wall, as described in this section.

To mount the ATA2 on a wall

1. When using 0.5 mm wire (24 AWG), select a location within 800 m (2600 ft.) of the BCM main unit.
2. Allow 12.5 cm (5 in.) clearance for the line jack, terminal jack, and power supply connector.
3. Screw two 4-mm (#8) screws into the wall, 130 mm (5 1/4 in.) away from each other. Leave 6 mm (1/4 in.) of the two screws showing.
4. Align the slots at the back of the ATA2 unit over the screws. Push the unit against the wall. The line jack, terminal jack, and power supply connector must be at the top of the ATA2 (see Figure 84).

Figure 84 ATA2 back view

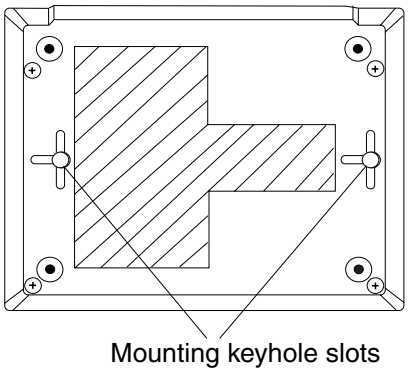

Test insertion loss measurement

The maximum loss for ATA2 to Central Office (CO) configuration must not exceed 10 dB (see Figure 85 on page 173).

Figure 85 Insertion loss from the CO to the analog telephone

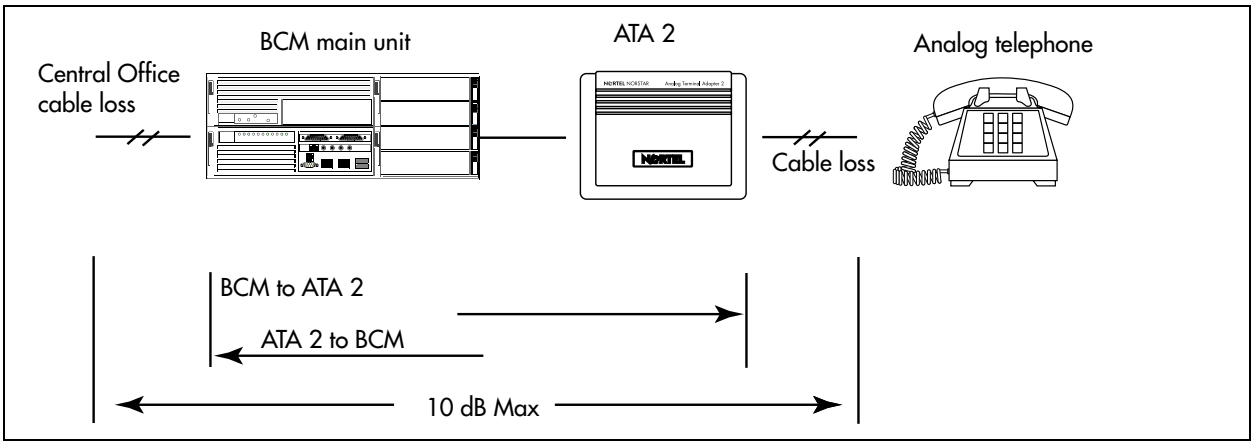

Longitudinal balance to ground	50 dB 60 to 4,000 Hz With IEEE 455-1976 test
Overload level	3 dB

Measure the total insertion loss between the CO and analog device by using standard dial-up test lines with a transmission test set (for example, Hewlett-Packard 4935A Transmission Test Set).

To measure the insertion loss from the CO to the analog device

1. Establish a connection to the 1 mW, 1 kHz, CO service line with an analog telephone attached to the ATA2.
2. Ensure that the analog port terminates correctly in 600 ohms:
   - Replace the analog telephone with the test set.
   - Use RECEIVE/600 OHM/HOLD mode on the test set.
3. Ensure that the test set connects in parallel to the service line before removing the analog telephone or the line drops.
4. Remove the single-line telephone.
5. Measure the 1 kHz tone at the far end of the analog port, which is where the analog loop ends and where the analog device connects.

Note: The tone must be greater than - 10 dB (for example, - 9 dB is acceptable).

To measure the insertion loss from the analog device to the CO

1. Establish a connection to a silent termination on the CO service line with an analog telephone attached to the ATA2.
2. Make sure the analog port terminates correctly in 600 ohms:

- Replace the analog telephone with the test set.
- Use TRANSMIT/600 OHM/HOLD mode on the test set.

3 Make sure the test set connects in parallel to the service line before removing the analog telephone or the line drops.

4 Remove the analog telephone.

5 Introduce a 1 kHz tone into the analog line at - 10 dBm, and measure the level at the CO exchange.

Note: The difference in levels is the transmit loss and must be less than 10 dB (for example, 9 dB is acceptable).

Configuring the ATA2

Configure the ATA2 using Element Manager or Telset Administration. For detailed configuration information, refer to the *BCM 4.0 Device Configuration Guide.*

Chapter 12
Installing optional telephony equipment

Use the procedures described in this chapter to connect the optional ringer, page, and music telephony equipment to the media services card (MSC) connectors. Locate and use the MSC connectors on the front of the BCM base function tray.

This section describes the following main topics:

- "Installing an auxiliary ringer" on page 175
- "Activating auxiliary ringer programming" on page 176
- "Connecting the external paging system" on page 176
- "Connecting an external music source" on page 177

Installing an auxiliary ringer

An auxiliary ringer is a customer-supplied piece of hardware that provides external ringing capability to telephones on the BCM system.

To install an auxiliary ringer

1. Use the installation instructions that came with the ringer hardware to install the auxiliary ringer.
2. Connect the ringer generator miniature jack to the auxiliary ringer output on the MSC. Refer to Figure 86.
3. Select the appropriate option for your system:
   - If you are adding more auxiliary equipment, proceed to "Connecting the external paging system" on page 176 or "Connecting an external music source" on page 177.
   - If you are finished adding auxiliary equipment, proceed to "Next step" on page 178.

Figure 86 Auxiliary ringer jack

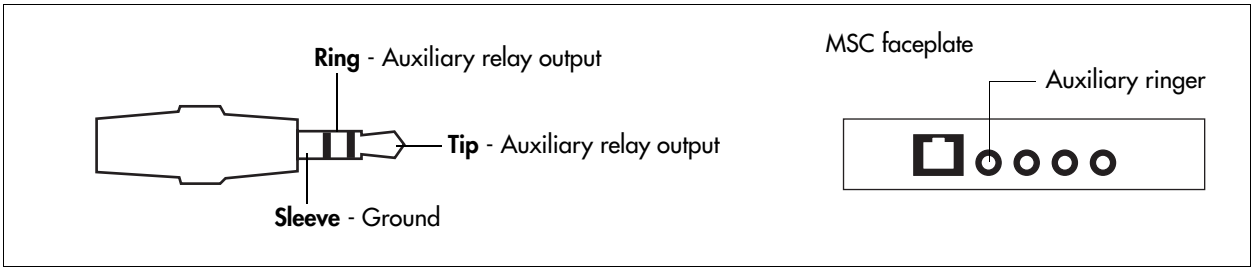

Warning: The auxiliary ringer must not be connected to exposed plant. The ringer must not draw more than 50 mA from a 40 V DC source.

Activating auxiliary ringer programming

You can activate the auxiliary ringer by setting auxiliary ring for specific external lines and BCM telephones.

Connecting the external paging system

You can connect a customer-supplied external paging system to provide paging over external loudspeakers.

Ensure the paging system follows these guidelines:

- The paging output from the MSC is 100 mV rms across an input impedance of 600 Ω
- The output level is 0 dBm0 with reference to 600 ohms, for a PCM encoded signal at 0 dBm. There is no DC voltage across the page output terminals.
- The page output uses the tip and ring terminals of the jack. The sleeve terminal of the jack connects to ground. You must use a stereo plug to connect the page signal output.

When you use the page signal output jack to connect an external paging amplifier, you also use the page relay jack, which contains a floating relay contact pair. The system uses this jack to control the external paging amplifier.

- The contact pair has a switch capacity of 50 mA (non-inductive) at 40 V (maximum). You must remove any inductive load on the output.
- The page relay contacts connect to the tip and ring terminals of the jack. The sleeve terminal of the jack connects to ground. You must use a stereo plug to connect the page relay.

To install an external paging system

1. Use the installation instructions that came with the external paging hardware to install the external paging system.
2. Connect the paging system audio input to the page output on the MSC. Refer to Figure 87.

Figure 87 Audio input jack

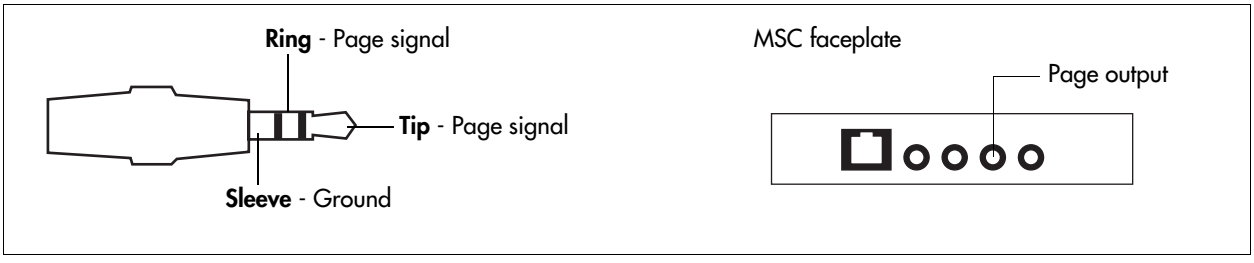

3. Connect the paging system relay to the page relay output on the MSC. Refer to Figure 88.

Figure 88 Page relay jack

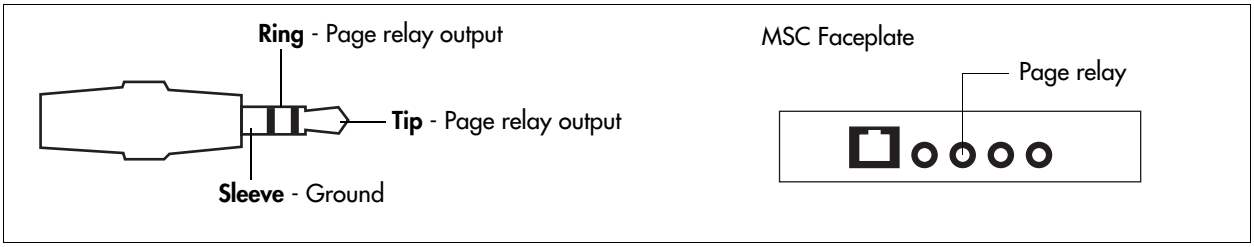

Warning: The paging connections must not be connected to exposed plant.

Tip: Paging tips

BCM external paging does not support talk-back paging equipment unless you use an external line port.

The BCM system provides paging over the telephone speakers when there is no external paging equipment.

4 Select the appropriate option for your system:

- If you are adding more auxiliary equipment, proceed to "Connecting an external music source" on page 177.
- If you are finished adding auxiliary equipment, proceed to "Next step" on page 178.

Connecting an external music source

Use this procedure to connect an external music source to the BCM system. You can use any customer-supplied, approved, low power device as a music source. A music source includes equipment such as a radio with a high-impedance earphone jack.

Music-on-hold specifications

Ensure that the music source follows these guidelines:

- Nominal input impedance is 3.3 kilohms.
- Nominal sensitivity of this interface returned to digital encoded PCM is -22 dBm0 for a 0.25 V rms input signal.
- The input is limited so that the encoded analog content at the digital interface to the network does not exceed -12 dBm when averaged over any 3-second interval.
- The maximum non-clipped input level is 1 V rms.
- The interface is protected against ringing cross.

To connect an external music source

1 Connect the miniature jack of the music source output to the music-on-hold input on the MSC. Refer to Figure 89.

Figure 89 Music-on-hold jack

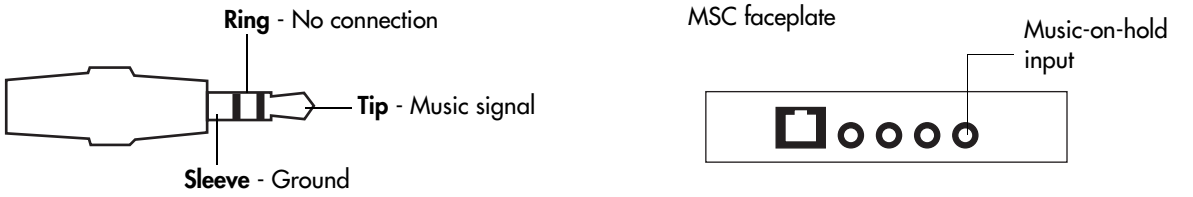

2 Adjust the volume of the music source to an appropriate level by activating Background Music and adjusting the volume at the music source.

Tip: You can adjust the Background Music volume at every telephone.

3 Enable music for callers on hold and for background music through programming.

Next step

After you have connected the cables to the BCM system, you can configure the BCM system. Refer to "Configuring the BCM system" on page 185 for information about configuring the BCM system.

Chapter 13
Initializing the system

After you start the BCM system, you are ready to set the initial configuration parameters.

The initial configuration defines your BCM system to the network. It also gives the system a unique identity and initial parameters. From that point, you can continue with the specific configurations for your system, which are described in the *BCM 4.0 Administration Guide* and the other user guides for each optional application you choose to add to your system.

Data parameter requirements

Obtain the following parameter values from an Internet service provider (ISP) or corporate network administrator.

- initial IP address and netmask for each network interface
- primary (and optional secondary) DNS servers
- default next-hop router
- fractional T1 channel numbers (if you are using fractional TI)
- system name
- WAN link protocol
- frame relay DLCI/CIR (if applicable)
- V.90 or V.92 modem settings (North America only)

Using the default BCM system IP address

All BCM systems are shipped with this default address:

- IP address: 10.10.10.1
- Subnet: 255.255.255.0

If you can use the default IP address, you can connect the BCM system to the LAN. This enables you to configure the BCM system, through Element Manager, from any PC connected to the LAN.

You can also connect to the BCM system using an Ethernet crossover cable (see “Using the Ethernet crossover cable” on page 180) or through the serial port (“Connecting through the serial port” on page 181).

Warning: Before using the default address on your network, check with your system administrator. If this address conflicts with the LAN settings, you can cause network damage if you connect to the network without changing the IP address.

If you must change the IP address (due to a conflict with your network), connect to the BCM system using an Ethernet crossover cable (see "Using the Ethernet crossover cable" on page 180), through the serial port (see "Connecting through the serial port" on page 181), or change the IP address using Telset Administration.

Using the Ethernet crossover cable

You use an Ethernet crossover cable connected to a computer with a network card to connect your computer to the LAN card in the BCM main unit. With this connection, you can use Element Manager to configure the BCM system when you are unable to immediately connect your system to the LAN card or your system does not have a network connection.

You use this type of connection in these situations:

- The computer you are using does not have access to the BCM system through the network.
- The BCM system is not connected to a LAN or WAN.
- You have to change the IP address and netmask for the BCM system before you connect it to the network.

Setting the crossover connections

To connect to the BCM system using an Ethernet crossover cable, you need a computer equipped with a 10/100 Base T network interface card and TCP/IP protocol. Figure 90 shows the connections required.

Figure 90 Ethernet crossover cable

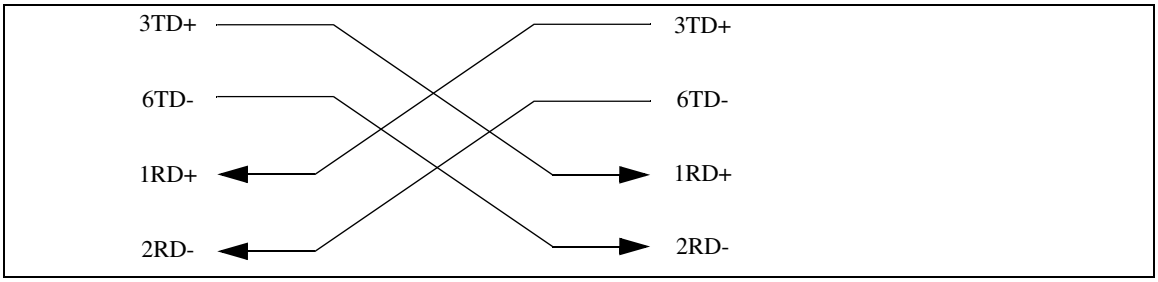

Connecting through Ethernet crossover cable

Use the following two procedures to connect the Ethernet crossover cable and configure your computer to connect to the BCM system.

To connect the Ethernet crossover cable

1. Shut down the computer.
2. Attach one end of the Ethernet crossover cable to the LAN card on the BCM main unit.
3. Connect the other end of the cable to the network interface card on your computer.

4 Start the computer.

To configure your computer

Note: The steps below may differ slightly depending on the operating system of your computer. The task in this section is to specify the IP address and subnet mask for the computer.

1 From the **Start** menu, choose **Settings** then choose **Control Panel**.

2 Double-click the **Network** icon.

3 Select your TCP/IP adapter, and then click the **Properties** button.

4 Click the **IP Address** tab.

5 Click the **Specify an IP address** option.

6 In the **IP Address** field, enter the IP address of the BCM system (if using the default IP address, enter 10.10.10.2).

7 In the **Subnet Mask** field, enter the subnet mask of the BCM system (if using the default, enter 255.255.255.0).

8 Click **OK**.

9 Click **OK**.

Your computer is now configured to connect to the BCM system.

Connecting through the serial port

You can also connect to the BCM system through the serial port using a null modem cable. You can then change the IP address of the BCM system and perform other basic configuration tasks. You can use Element Manager to perform more detailed configuration of your system.

You must use a null modem cable connection to the BCM main unit if the default IP address is not compatible with your LAN or WAN network.

Required equipment:

- null modem cable
- VT100-compatible terminal or a computer that has a terminal program such as Hyperterminal

Warning: Your terminal must be VT100-compatible and must support the VT100 National Character set. If the terminal does not support the National Character set, the text displays incorrectly.

You can enable or disable the serial port through Element Manager. This functionality is helpful for diagnostics and to make the system more secure. By default the serial port is enabled.

Null modem cable setup

Table 63 and Figure 91 show the correct wiring for the BCM serial port of the null modem cable.

Table 63 Serial port pinout

Pin	Signal
1	Data Carrier Detect (DCD)
2	* Serial data in (RX)
3	* Serial data out (TX)
4	Data Terminal Ready (DTR)
5	* Ground

Pin	Signal
6	Data Set Ready (DSR)
7	Request to Send (RTS)
8	Clear to Send (CTS)
9	Ring Indicator (RI)

* required connections

Figure 91 Serial pinout

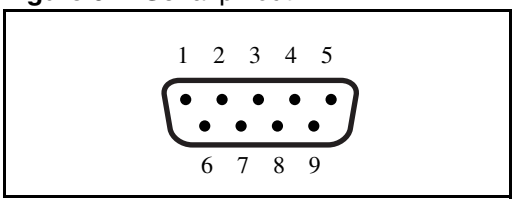

Transmission parameters:

- 9600 bits per second
- 8 data bits
- no parity
- 1 stop bit
- hardware flow control

Note: For instructions about how to set the transmission parameters, refer to the terminal or terminal emulation program documentation. The BCM system supports carriage return.

To display the configuration menus

1 Attach the null modem cable to the serial port on the BCM main unit.

Note: The location of the transmit (TX) and receive (RX) pins on your terminal can vary. Refer to your terminal or computer documentation to confirm pin locations.

2 Attach the other end of the null modem cable to the serial port on the terminal or computer.

3 Ensure that the BCM main unit and your terminal or computer are turned on.

4 Access the BCM main unit using one of the following methods:

a If using a terminal emulation program (Hyperterminal), attach a configuration computer to the BCM main unit serial port (recommended method).

b If you are accessing the BCM main unit through your local area network through SSH (secure socket shell), use the default IP address 10.10.10.1.

5 When prompted for a **User ID**, type:

`nnadmin`

6 When prompted for a **Domain**, press <ENTER>.

7 When prompted for a **Password**, type:

`PlsChgMe!`

8 The Configuration main menu screen appears. Refer to Figure 92.

Figure 92 Configuration main menu screen

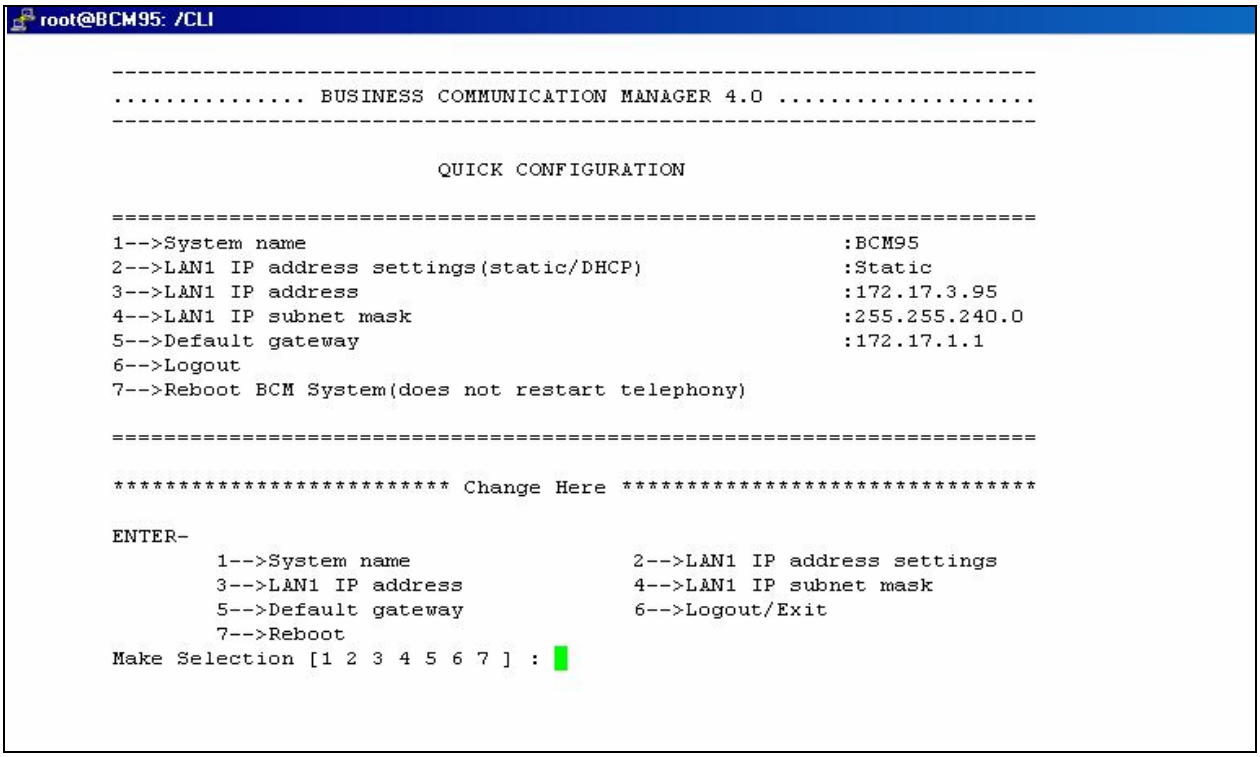

Note: If the Initialization Menu screen appears instead of the Main Menu shown above, your BCM system is not initialized correctly.

9 Enter the number of the parameter you want to configure.

Warning: Changing this information on an existing system completely erases the telephony programming and disables the telephony system. It also reboots the BCM system.

Software keycode

You require a keycode to enable software features on the BCM system. You receive only one keycode whether you purchase one feature or a bundle of features.

To generate a keycode, you require an authorization code for each feature you purchase.

For example, if you have one feature, you receive one authorization code and you will generate one keycode. If you purchase four features, you receive four authorization codes, however, you will still generate only one keycode.

To generate a keycode through the Nortel Keycode Retrieval System (KRS), you require:

- Username and password for the KRS (http://www.nortel.com/servsup/krs)
- BCM 4.0 feature authorization code for each feature
- BCM 4.0 system ID

You can apply a keycode file using:

- Element Manager (see "To enter a keycode" on page 197)
- Startup Profile (see "Using the Startup Profile to configure parameters" on page 207)
- Telset Administration (see "To enter the keycodes" on page 190)

For more information on keycodes, refer to the *Keycode Installation Guide*.

Regenerating a keycode after system replacement

If you replace your media services card (MSC), you must regenerate your keycode file to reflect the new system identification. Apply the keycode file after you perform your system data restore. For more information, refer to the *Keycode Installation Guide*.

Next step

After connecting to the BCM system, proceed to "Configuring the BCM system" on page 185.

Chapter 14
Configuring the BCM system

This section provides information on configuring the basic BCM parameters. You can configure more advanced parameters using Element Manager or Telset Administration after the BCM system is operational.

Figure 93 shows an overview of configuring the basic BCM parameters.

Figure 93 Overview of configuring the basic BCM parameters

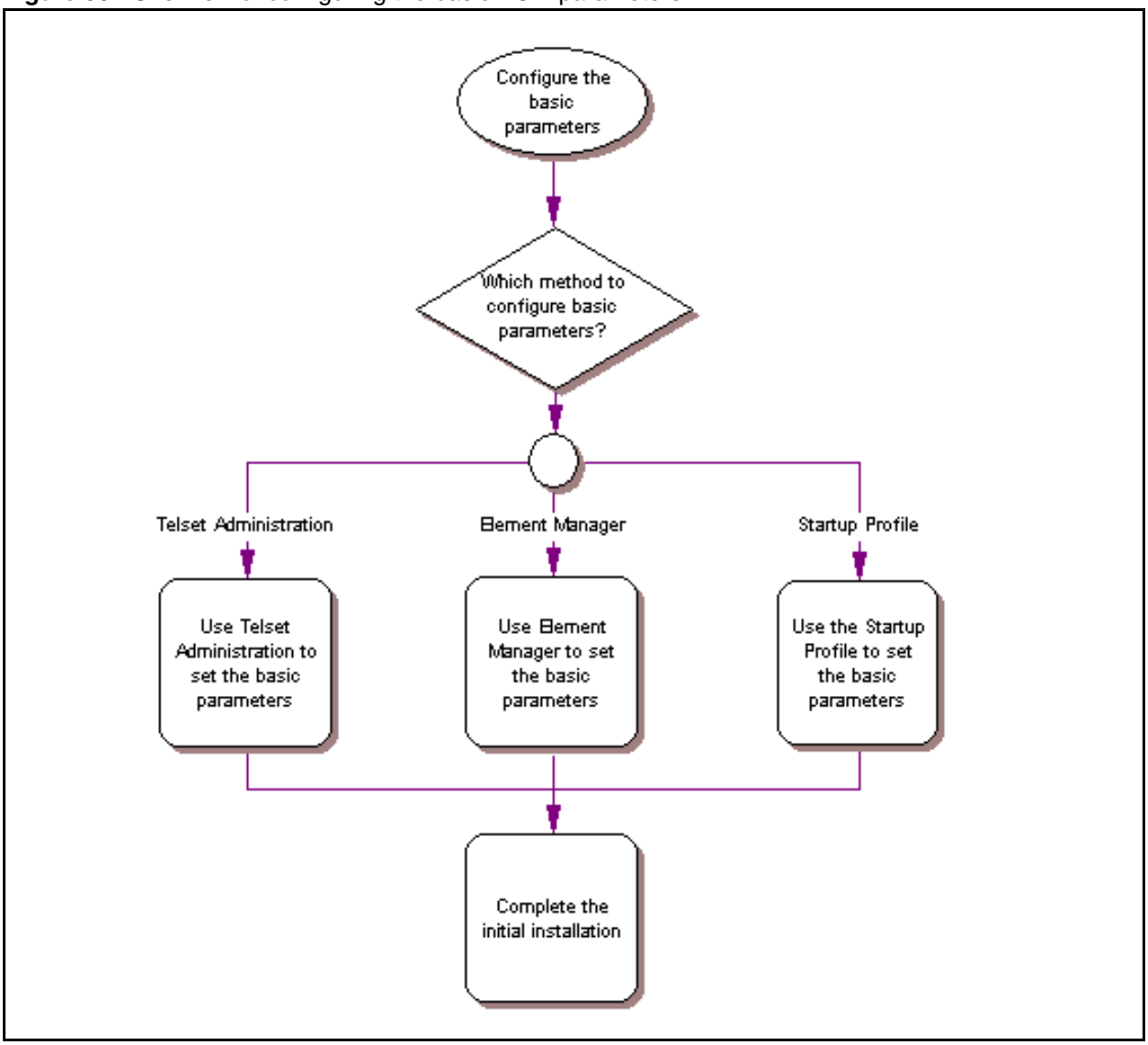

For simplicity, the task of configuring the basic BCM parameters is divided into two parts:

- "Initial parameters overview" on page 186
- "Startup parameters overview" on page 187

Initial parameters overview

The initial parameters are the required parameters that can be configured using Telset Administration, Element Manager, or the Startup Profile. See Table 64 for a list of the initial parameters.

Table 64 Initial parameters

Parameters	Telset Administration	Element Manager	Startup Profile
Keycode	Feature 9*8 > Feature codes	Configuration > System > Keycodes	Keycode
IP address: • Obtain dynamically • IP address • IP subnet mask	Feature 9*8 > IP Address	Configuration > Resources > Network Interface	IP Address
Modem: • Enable/disable modem	Feature 9*8 > Modem	Configuration > Resources > Network Interface	Modem
System: • Region	Feature **PROFILE	Administration > Utilities > Reset > Cold Reset Telephony Services	System
Telephony startup: • Template • Start DN	Feature **STARTUP	Administration > Utilities > Reset > Cold Reset Telephony Services	Telephony Startup
Voice mail: • Attendant DN • UI style • Language • From Line • To Line • Number of rings	Feature 983	Configuration > Applications > Voice Messaging/Contact Center	Voice Mail Startup
User account: • Telset user ID (numeric) • Telset password (numeric)	Feature 9*8 > User Accounts	Configuration > Administrator Access > Accounts and Privileges > View by Accounts tab	User Account

Startup parameters overview

The startup parameters are the remaining required parameters that cannot be configured using Telset Administration. These parameters must be configured using Element Manager or the Startup Profile. See Table 65 for a list of the startup parameters.

Table 65 Startup parameters (Sheet 1 of 2)

Parameters	Telset Administration	Element Manager	Startup Profile
System: • System name	N/A	Configuration > System > Identification (ID set automatically)	System
System: • System ID	N/A	Configuration > System > Keycodes (View ID - it is set automatically and cannot be changed)	System
Time: • Date and Time source • NTP server address • Date and time • Time zone	N/A	Configuration > System > Date and Time	Time
DHCP server: • Enable/disable server • IP domain name • Primary DNS • Secondary DNS • Default gateway	N/A	Configuration > Data Services > DHCP Server > Subnets tab	DHCP Server
IP Phones: • Enable registration • Enable global pwd • Global pwd • Auto-assign DNs • Advertisement logo	N/A	Configuration > Resources > Telephony Resources	IP Telephones
SNMP Agent: • Enable/disable SNMP agent • Minimum security • SNMP version support	N/A	Configuration > Administrator Access > SNMP > General tab	SNMP Agent
SNMP community: • Community string • Type of access	N/A	Configuration > Administrator Access > SNMP > Community strings tab	SNMP Community

Table 65 Startup parameters (Sheet 2 of 2)

Parameters	Telset Administration	Element Manager	Startup Profile
SNMP manager: • Manager IP address	N/A	Configuration > Administrator Access > SNMP > General tab	SNMP Manager
User account: • User ID • Group • Description • Callback number	N/A	Configuration > Administrator Access > View by Accounts tab	User Account

Chapter 15
Using Telset Administration to set the basic parameters

Telset Administration allows you to use a digital telephone with a two-line display to set the BCM configuration parameters. You cannot set all the basic parameters using Telset Administration. Therefore, after configuring the initial parameters, you must use Element Manager to set the startup parameters. Refer to "Configuring the startup parameters" on page 200.

Refer to the *BCM 4.0 Telset Administration Guide* for more information on Telset Administration.

Figure 94 shows an overview of using Telset Administration to set the basic parameters.

Figure 94 Overview of using Telset Administration

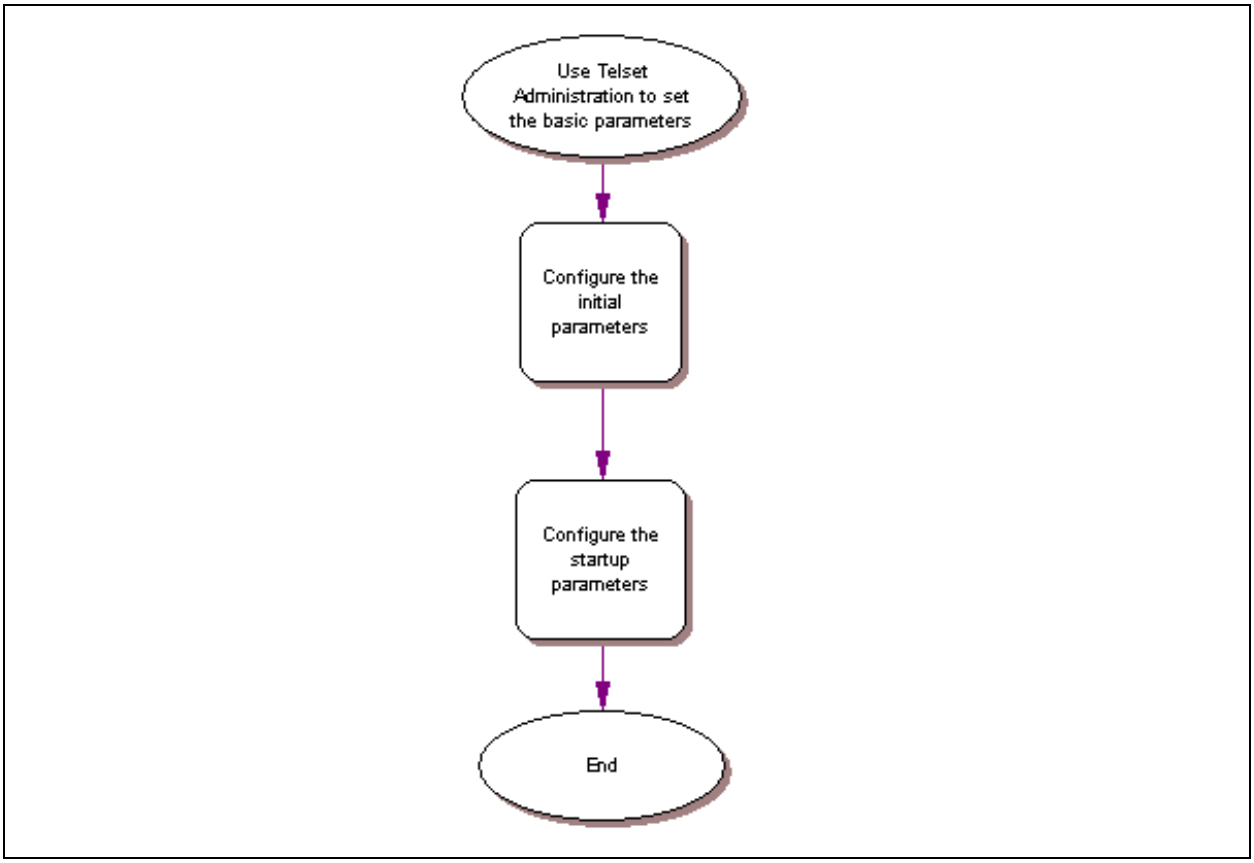

Configuring the initial parameters

Use the following procedures to configure the initial parameters for the BCM using Telset Administration:

- "To enter the keycodes"
- "To configure the IP address"
- "To configure the modem" on page 191
- "To select the region" on page 191
- "To select the telephony startup template and start DN" on page 192
- "To initialize voice mail" on page 192
- "To create Telset user accounts" on page 192

To enter the keycodes

1. Select Feature 9*8 from a two-line display telephone.
2. Enter the following user ID and password:
   User ID: **SETNNA**
   Password: **CONFIG**

   The numerical values of the user ID and password are 738662 and 266344, respectively.
3. Press **NEXT** to scroll through the menu and select **Feature Codes**.
4. Press **OK**.
5. Press **NEXT** to scroll through the list and do one of the following:

   a If you want to enter keycodes to activate features, select **Feature List**.

   - Press **SHOW** to view the available features.
   - Use the soft keys to activate features for your system.

   b If you want to modify existing keycodes, select **Keycode**.

   - Press **SHOW** to view the keycodes.
   - Use the soft keys to modify existing keycodes for your system.

   Refer to the *Keycode Installation Guide* for details on how to retrieve and enter the keycodes for your system.

To configure the IP address

1. Select Feature 9*8 from a two-line display telephone.
2. Enter the following user ID and password:
   User ID: **SETNNA**
   Password: **CONFIG**

   The numerical values of the user ID and password are 738662 and 266344, respectively.
3. Press **NEXT** to scroll through the menu and select **IP Address**.

4 Press **OK**.

5 Press **CHNGE** to modify the IP settings. The display screen shows if DHCP is enabled or disabled.

6 Do one of the following:

a If DHCP is currently enabled:

- Press **DIS** to disable DHCP. You have the option to modify the IP Address, Subnet Mask, and Default Gateway. However, these settings have no effect as long as the system is disabled.
- Press **IP** to modify the following IP settings:
  - IP Address
  - Subnet Mask
  - Default Gateway

b If DHCP is currently disabled:

- Press **ENL** to enable DHCP. The system must reboot to enable DHCP.
- Press **IP** to modify the IP settings. You have the option to modify the IP Address, Subnet Mask, and Default Gateway. However, these settings have no effect as long as the system is disabled.

7 Press **Back** to reboot the system.

To configure the modem

1 Select Feature 9*8 from a two-line display telephone.

2 Enter the following user ID and password:
User ID: **SETNNA**
Password: **CONFIG**

The numerical values of the user ID and password are 738662 and 266344, respectively.

3 Press **NEXT** to scroll through the menu and select **Modem**.

4 Press **OK**. The display screen shows if the modem is enabled or disabled.

5 Do one of the following:

a If the modem is disabled, press **ENL** to enable the modem.

b If the modem is enabled, press **DIS** to disable the modem.

For more information on modem configuration refer to the *BCM 4.0 Networking Configuration Guide*.

To select the region

You set the region using Feature **PROFILE from a two-line display telephone.

Refer to the *BCM 4.0 Telset Administration Guide* for information on using Telset Administration to set this parameter.

To select the telephony startup template and start DN

You set the template and start DN using Feature **STARTUP from a two-line display telephone.

Note: You can only set these parameters for only 15 minutes after system bootup.

Refer to the *BCM 4.0 Telset Administration Guide* for information on using Telset Administration to set this parameter.

Other telephony startup parameters are configured using Feature **CONFIG. Refer to the *BCM 4.0 Telset Administration Guide* for more information.

To initialize voice mail

You initialize your voice mail system using Feature 983 from a two-line display telephone.

Refer to the *CallPilot Telephone Administation Guide* for information on using Telset Administration to initialize your voice mail system.

To create Telset user accounts

Note: You can only create Telset accounts using Telset Administration. To create Element Manager accounts, you must use Element Manager.

1. Select Feature 9*8 from a two-line display telephone.
2. Enter the following user ID and password:
   User ID: **SETNNA**
   Password: **CONFIG**

   The numerical values of the user ID and password are 738662 and 266344, respectively.
3. Press **NEXT** to scroll through the menu and select **User Accounts**.
4. Press **OK**. The Accounts screen appears.
5. Press **NEXT** to scroll through the list of available accounts to create.
6. Press **CHNGE** to change the status of the current account.
7. Press **CRT** to create the account.

   If you see the **DEL** command instead of the **CRT** command, then the account is already created.
8. Press **BACK**. The Accounts screen appears.
9. Press **NEXT**. The password screen appears.
10. Press **CHNGE** to change the password.
11. Press **NEXT** to scroll through the list of available accounts.

12 Press **CHNGE** to change the password for the selected account.

13 Enter the new password for the account.

14 Enter the new password again to confirm it.

Refer to "To create user accounts" on page 205 for more information on creating user accounts using Element Manager.

Next step

After you configure the initial parameters using Telset Administration, you must configure the startup parameters using Element Manager. Refer to "Configuring the startup parameters" on page 200 for more information.

Chapter 16
Using Element Manager to set the basic parameters

The Element Manager application provides a computer-based client interface that can connect to devices over an IP network and display the programming interface for that device.

Through Element Manager, you can configure all of the basic parameters, which include:

- "Configuring the initial parameters" on page 197
- "Configuring the startup parameters" on page 200

Refer to the *BCM 4.0 Administration Guide* for more information on how to use Element Manager.

Figure 95 shows an overview of using Element Manager to set the basic parameters.

Figure 95 Overview of using Element Manager

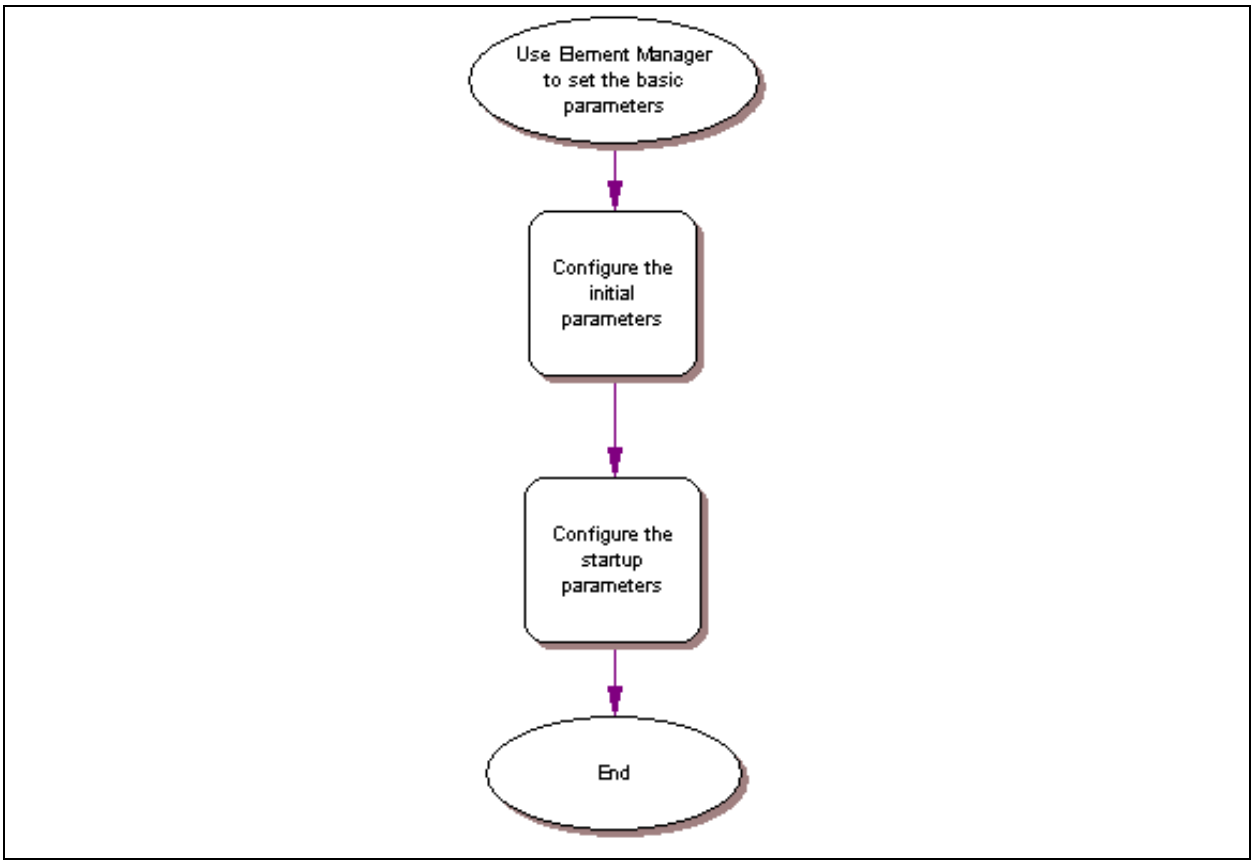

Prerequisites

BCM Element Manager has the following system requirements:

- Windows: Windows 98SE, Windows 2000, Windows XP
- RAM: minimum 256 MB, recommended 512 MB
- free space: 150 MB
- BCM Element Manager access is also supported through a Citrix server

Accessing the BCM system

After your computer is connected to the BCM system, either through an Ethernet crossover cable or through a LAN connection, you can download BCM Element Manager from the Administrator Applications area of the BCM web page.

To access the BCM web page

1. Open a web browser and enter the BCM system IP address.

   The Enter Network Password dialog box opens.

2. Enter the username and password (defaults are shown below):

   Username: **nnadmin**

   Password: **PlsChgMe!**

3. Click **OK**.

   The Welcome to BCM web page opens.

To download and install BCM Element Manager

1. On the **Welcome to BCM** web page, click **Administrator Applications**.

   The Administrator Applications page opens.

2. On the **Administrator Applications** page, click **BCM Element Manager**.

   The BCM Element Manager panel opens.

3. Read the information on this panel.

4. Click **Download Element Manager** on the right side of the screen, and follow the instructions to download.

5. After BCM Element Manager has finished downloading, double-click the application and follow the instructions to install.

To connect to the BCM system

1. Open BCM Element Manager.
2. From the **Network** menu, select **New Network Element**, and then select **Business Communications Manager**.
3. Enter the BCM system IP address, the username, and password (the default is are shown below):

   IP address: **10.10.10.1**

   Username: **nnadmin**

   Password: **PlsChgMe!**
4. Click **OK**.
5. From the **Network Elements** folder, select the BCM system IP address.
6. Make sure that the correct username and password are entered.
7. Click **Connect**.

   You are now connected to the BCM system.

For more information on using BCM Element Manager, refer to the online Help within BCM Element Manager.

Configuring the initial parameters

Use the following procedures to configure the initial parameters for the BCM system using BCM Element Manager:

- "To enter a keycode"
- "To configure the LAN IP address"
- "To configure the modem" on page 198
- "To configure the startup template for telephony services" on page 199
- "To initialize voice mail" on page 199

To enter a keycode

1. From the **Configuration** tab, click the **System** folder to expand it.
2. Select **Keycodes**. The Keycodes panel opens.
3. Click **Connect to Nortel Keycode Retrieval System**. The Open dialog box opens.
4. Select the keycode file for your system and click **Open**.

Refer to the *Keycode Installation Guide* for details on how to retrieve and enter the keycodes for your system.

To configure the LAN IP address

1 From the **Configuration** tab, click the **Resources** folder to expand it.

2 Select **Network Interfaces**.

3 Select the **Interfaces** tab. It is normally selected by default.

4 Select the LAN interface to configure.

5 From the Details panel, select the **IP Settings** tab.

6 From the IP Address Specification area, click **Modify**. The Modify IP Settings dialog box opens.

7 Configure the IP Settings attributes (see Table 66).

Table 66 Modify IP Settings attributes

Attribute	Description
Obtain IP address dynamically	If this is selected, the BCM system attempts to take IP address information from a DHCP server. If this is not selected, you must enter values for static IP address, IP subnet mask, and Default gateway.
IP address	The IP address of the BCM system.
IP subnet mask	The subnet mask used by the BCM system.
Note: If any of the attributes are modified, then the Element Manager session is disconnected.	

8 Click **Ok**.

To configure the modem

1 From the **Configuration** tab, click the **Resources** folder to expand it.

2 Select **Network Interfaces**.

3 Select the **Global Settings** tab.

4 Select the regional profile from the **Modem Region** dropdown list for your region.

5 Select the **Enable modem** checkbox to enable the modem.

For more information on modem configuration, refer to the *BCM 4.0 Networking Configuration Guide*.

To configure the startup template for telephony services

Note: This procedure erases all the telephony programming that is currently on the BCM system.

1 From the **Administration** tab, click the **Utilities** folder to expand it.

2 Select **Reset**.

3 Click **Cold Reset Telephony Services**. The Cold Reset Telephony dialog box opens.

4 Configure the Cold Reset Telephony attributes (see Table 67).

Table 67 Cold Reset Telephony attributes

Attribute	Description
Region	Specify the startup region.
Template	Specify the startup template.
Start DN	Specify the startup DN. The default is 221.
Force MSC Download	Select the checkbox to enable a forced download of the modified information.

5 Click **Ok**.

To initialize voice mail

1 From the **Configuration** tab, click **Applications** folder to expand it.

2 Select **Voice Messaging/Contact Center**.

3 Click **Launch CallPilot Manager**. The Quick Install Wizard form opens.

If your voice mail system is already initialized, you will not see the Quick Install Wizard. Instead you will see the CallPilot Manager: Main Menu web page.

4 Configure the attributes on the Quick Install Wizard form (see Table 68).

Table 68 Quick Install Wizard attributes

Attribute	Description
Attendant DN	Enter the extension number of the attendant or operator assigned to CallPilot.
Primary UI Style	Select the mailbox user interface used as a default for the mailboxes. If you select NVM, the mailbox user interface uses Norstar voice mail voice and text prompts. If you select CallPilot, the mailbox user interface uses CallPilot voice and text prompts.
Primary Language	Select the language used as the primary language for the mailboxes.
From Line	Enter the line number of the first line in the range of lines you want CallPilot to answer. CallPilot answers the range of lines between this line and the line you enter in the To Line box.

Table 68 Quick Install Wizard attributes

Attribute	Description
To Line	Enter the line number of the last line in the range of lines you want CallPilot to answer.
Number of rings	Enter the number of rings you want CallPilot to wait before answering lines.

5 Click **Install**.

Configuring the startup parameters

Use the following procedures to configure the startup parameters for the BCM system using Element Manager:

- "To enter a name for your system"
- "To configure the date and time settings"
- "To configure DHCP server settings"
- "To configure IP Phones" on page 202
- "To configure SNMP settings" on page 203
- "To configure SNMP community strings" on page 204
- "To configure the SNMP manager list" on page 204
- "To create user accounts" on page 205

To enter a name for your system

1 From the **Configuration** tab, click the **System** folder to expand it.

2 Select **Identification** from the System folder.

3 Enter a name for your system in the System name field.

To configure the date and time settings

1 From the **Configuration** tab, click the **System** folder to expand it.

2 Select **Date and Time**. The Date and Time panel opens.

3 Configure the Date and Time attributes (see Table 69).

Table 69 Date and Time attributes

Attribute	Description
Date and Time source	Set to NTP if the system uses a network server to determine the correct time and date. Set to Trunk if you want to receive time and date settings from PSTN (if available). Set to Manual if you want to be able to manually configure the time and date for your system.
NTP server	If Date and Time source is set to NTP, then enter an address for the server.
Date and time	Use the drop-down calendar to select the correct date and time.
Time zone	Select the time zone for this system.

To configure DHCP server settings

1 From the **Configuration** tab, click the **Data Services** folder to expand it.

2 Select **DHCP Server**.

3 Select the **DHCP Settings** tab.

4 Configure the **DHCP mode** attribute. Select either DHCP Server or DHCP Relay Agent from the dropdown list.

5 Click the **Subnets** tab and select the **LAN1** heading.

The details panel for **LAN1** appears.

6 Select the **General Settings** tab.

7 Configure the attributes according to the following table.

Table 70 Subnets: General Settings attributes (Sheet 1 of 2)

Attribute	Description
IP domain name	The domain name of the network.
Primary DNS IP address	Allows you to specify the IP addresses of the primary DNS server in a valid dot format. BCM automatically assigns the value for this parameter. If the IP address or subnet mask for the corresponding LAN interface changes, this value is overwritten. Use caution when changing this value.
Secondary DNS IP address	Allows you to specify the IP addresses of the secondary DNS server in a valid dot format. BCM automatically assigns the value for this parameter. If the IP address or subnet mask for the corresponding LAN interface changes, this value is overwritten. Use caution when changing this value.
WINS server address	Allows you to specify the IP address of the WINS server. BCM automatically assigns the value for this parameter. If the IP address or subnet mask for the corresponding LAN interface changes, this value is overwritten. Use caution when changing this value.

Table 70 Subnets: General Settings attributes (Sheet 2 of 2)

Attribute	Description
WINS node type	Allows you to specify a client's WINS node type. The BCM system automatically sets this value to H-node on all DHCP clients. This setting configures the DHCP client PCs to use P-node name resolution before resorting to B-node name resolution. This is efficient when a WINS server is configured for the network. The BCM system also includes a WINS server. **Note**: Use caution if you change this attribute.
Default gateway	Allows you to specify the IP address of the default next-hop router. BCM automatically assigns the value for this parameter. If the IP address or subnet mask for the corresponding LAN interface changes, this value is overwritten. Use caution when changing this value.
Lease time	Allows you to specify the time, in seconds, for an address assignment until the client's lease expires. The default is 259200 seconds (72 hours).

8 Click the **IP Terminal DHCP Options** tab.

9 Configure the DHCP server attributes (see Table 71).

Table 71 DHCP server: IP Terminal DHCP Options attributes

Attribute	Description
VLAN identifiers (comma-delimited)	Allows you to specify the Virtual LAN (VLAN) ID numbers that are given to the IP telephones.
TFTP Server	Allows you to specify the IP address of the TFTP server that is used by WLAN IP telephones. If your system does not have WLAN IP telephones, leave this box empty. Enter the IP address in a valid dot format.
WLAN IP Telephony Manager 2245	Allows you to specify the IP address of the SVP server that is used by WLAN IP telephones. If your system does not have WLAN IP telephones, leave this box empty. Enter the IP address in a valid dot format.

To configure IP Phones

1 From the **Configuration** tab, click the **Resources** folder to expand it.

2 Select **Telephony Resources**.

3 From the Actual Type column, select **IP & App Sets**.

The Details for Module area displays in the lower pane with the IP Terminal Global Settings tab as the default.

4 Configure the IP Terminal Global Settings attributes (see Table 72).

Table 72 IP Terminal Global Settings attributes

Attribute	Description
Enable registration	Select this check box to allow new IP clients to register with the system. **WARNING**: Remember to clear this check box when you have finished registering the new telephones.
Enable global registration password	If you want to require the installer to enter a password when IP telephones are configured and registered to the system, select this box. If this box is not selected (disabled), a valid Telset user ID and password is required to register IP phones.
Global password	If the Enable Global Registration Password check box is selected, enter the password the installer enters on the IP telephone to connect to the system. If this check box is left clear, no password prompt occurs during registration.
Auto-assign DNs	If this check box is selected, the system assigns an available DN as an IP terminal requests registration. It does not prompt the installer to enter a set DN. If this check box is clear, the installer receives a prompt to enter the assigned DN during the programming session.
Advertisement/Logo	Any information in this field appears on the display of all IP telephones. For example, your company name or slogan (24 characters in length).

Tip: To automatically configure IP Phones with DNs assigned:

1) Select the Enable registration check box.

2) Select the Enable global registration password check box.

3) Leave the Global password field blank.

4) Select the Auto-assign DNs check box.

After the IP Phones are operational, clear the Enable registration check box.

You can configure other attributes on the IP Terminal Global Settings tab depending on the requirements for your system.

To configure SNMP settings

1 From the **Configuration** tab, click the **Administrator Access** folder to expand it.

2 Select **SNMP** from the Administrator Access folder.

3 Select the **General** tab. It is normally selected by default.

4 Click **Modify** in the SNMP Settings area. The Modify SNMP Settings dialog box opens.

5 Configure the attributes for Modify SNMP Settings (see Table 73).

Table 73 Modify SNMP Settings attributes

Attribute	Description
Enable SNMP Agent	Select whether to enable or disable the SNMP agent by selecting (or not selecting) the check box.
Minimum required security	Select the minimum required security for SNMP from the drop-down list.
SNMP Version Support	Select the SMNP version support from the drop-down list.

6 Click **Ok**.

To configure SNMP community strings

1 From the **Configuration** tab, click the **Administrator Access** folder to expand it.

2 Select **SNMP** from the Administrator Access folder.

3 Select the **Community Strings** tab.

4 Click **Add...**. The Add Community String dialog box opens.

5 Configure the Add Community String attributes (see Table 74).

Table 74 Add Community String attributes

Attribute	Description
Community string	Enter the entry name used as a key to uniquely identify an individual community entry on the SNMP agent.
Type of access	Specify the read and write access for this community. Available options are Read Only and Read/Write.

6 Click **Ok**.

7 Repeat steps 4 to 6 to add more community strings.

To configure the SNMP manager list

Use the SNMP manager list to specify IP addresses that are allowed to connect to the SNMP agent.

1 From the **Configuration** tab, click the **Administrator Access** folder to expand it.

2 Select **SNMP** from the Administrator Access folder.

3 Select the **General** tab. It is normally selected by default.

4 Click **Add...** in the SNMP Manager List area. The Add Manager dialog box opens.

5 Enter the IP address in the Manager IP Address field.

6 Click **Ok**.

7 Repeat steps 4 to 6 to add another manager IP address.

To create user accounts

1 From the **Configuration** tab, click the **Administrator Access** folder to expand it.

2 Select **Accounts and Privileges** from the Administrator Access folder.

3 Select the **View by Accounts** tab.

4 Click **Add...** to add a user account. The Add Account dialog box opens.

5 Configure the Add Account attributes (see Table 75).

Table 75 Add Account attributes

Attribute	Description
Description	Enter a description for this account.
User ID	Enter a descriptive name for the user or the user function.
Password	Enter a password for this account.
Telset user ID (numeric)	If the user performs administration through the Telset interface, enter a number for the user ID.
Telset password (numeric)	Enter a password for the Telset User ID.
Modem Callback Number	If Callback is required, enter the number to which the system calls back in order to verify the dial-up user access.
Modem Callback Passcode	This is the code the system uses to confirm the callback is legitimate.
ISDN Callback Number	If ISDN Callback is required, enter the number to which the system calls back in order to verify the dial-up user access.
ISDN Callback Passcode	This is the code the system uses to confirm that the ISDN callback is legitimate.
Change Password On Login	Select this checkbox to force the user to change the password upon first login.
Change Password On Login Telset	Select this checkbox to force the user to change the Telset password upon first login.

6 Click **Ok**.

7 Repeat steps 4 to 6 to create more user accounts.

Next step

After you set the basic parameters, proceed to "Completing the initial installation (optional)" on page 213.

Chapter 17
Using the Startup Profile to configure parameters

The Startup Profile tool enables an experienced administrator to customize a template with common BCM parameters. This template is used to quickly configure one or multiple systems.

You create the Startup Profile using the Startup Profile template (a Microsoft Excel template). You then use a USB storage device to transfer the Startup Profile data to the BCM main unit.

Loading the Startup Profile increases the time for the BCM system to boot depending on the selected parameters. For example, if you apply a keycode using the Startup Profile, the BCM system might reboot, which can add up to 30 minutes to the total time. However, if your selected parameters do not require a reboot, as little as 5 extra minutes are added to the total time for the system to become operational. If you decide to configure these parameters using Element Manager, the overall time required for system reboots and applying the parameters are the same.

When the Startup Profile is successfully applied, the BCM system automatically reboots to complete the system configuration. The Startup Profile is not fully loaded until the system reboots.

Figure 96 shows an overview of using the Startup Profile.

Figure 96 Overview of using the Startup Profile

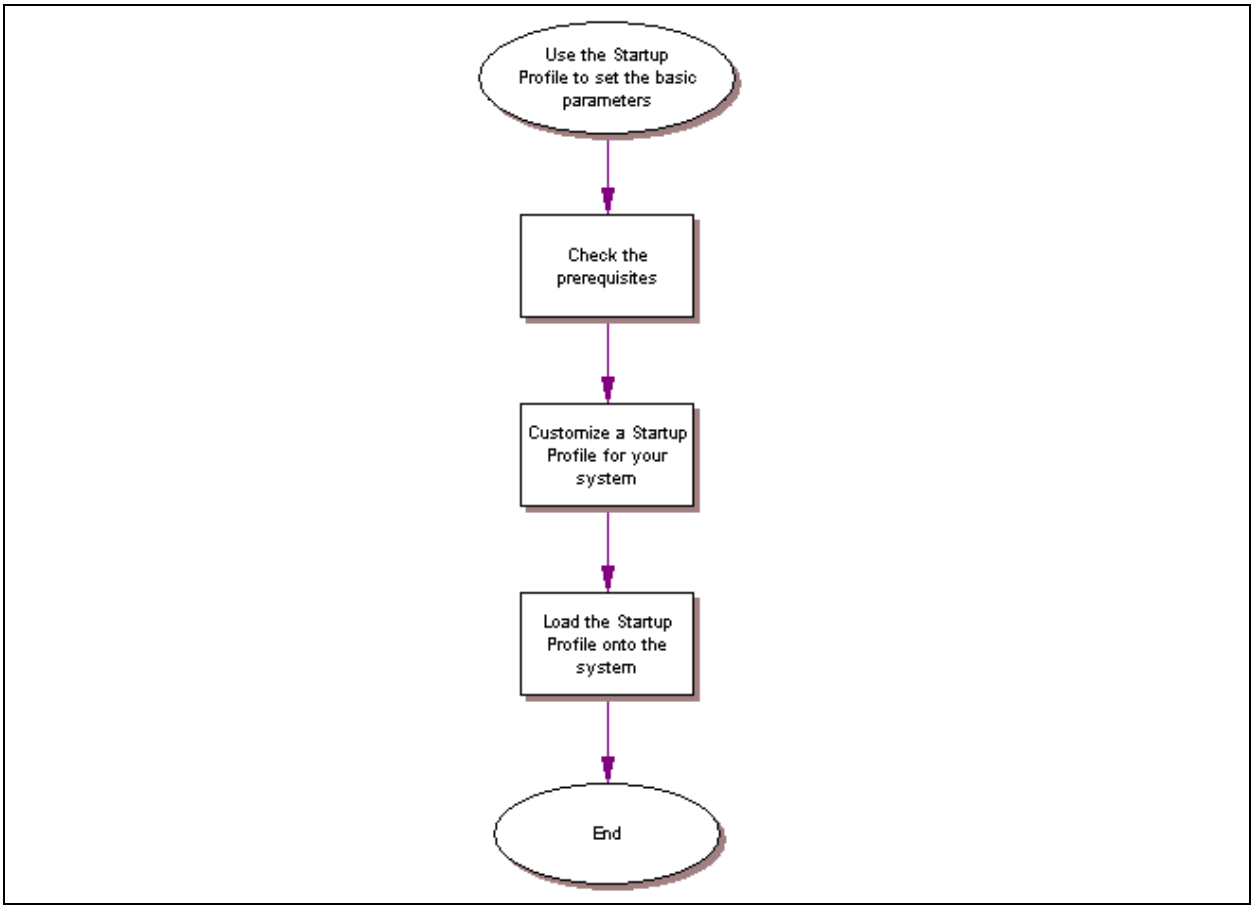

Note: The USB storage device must be formatted for the FAT32 file system. If necessary, reformat the USB storage device by plugging it into the USB port of your computer, right-clicking the USB device icon, and selecting FAT32 reformatting. This destroys any data you had on the USB.

Note: The Startup Profile functions only on a BCM system that does not have a keycode applied. After a keycode is applied, the Startup Profile does not function. This condition prevents overwriting of the parameters of a configured system.

To re-apply the Startup Profile, remove the applied keycode file by returning the system to factory defaults using the BIT tool.

Refer to the following sections for information on setting the initial parameters on the BCM system:

- "Startup Profile requirements"
- "Configuring basic parameters" on page 209

Startup Profile requirements

To use the Startup Profile template, you need the following:

- a computer with a USB port
- Microsoft Excel 2000 or later
- the Nortel BCM Startup Profile template (Microsoft Excel template)

  If you do not have the Startup Profile template on your computer, you can get a copy from the the Nortel support web site (www.nortel.com/support) or the Administrator Applications page on the main unit. Refer to "To download the Startup Profile template" on page 208 for details on getting the Startup Profile template from the main unit.
- a portable USB storage device compatible with USB 1.1 (formatted for FAT32)

To download the Startup Profile template

1. Access the BCM web page (see "To access the BCM web page" on page 196).
2. From the **Welcome to BCM** web page, click **Administrator Applications**.

   The Administrator Applications page opens.
3. From the **Administrator Applications** page, click **Startup Profile Template**.

   The Startup Profile Template panel opens.
4. Read the information on this panel.

5 Click **Download Startup Profile Template** on the right side of the screen, and follow the instructions to download.

Configuring basic parameters

To customize a Startup Profile for your system

Note: The Startup Profile template uses macros to perform certain functions. You must set your Excel macro security level to medium or low to enable the macros:

- From the **Tools** menu, select **Macros**, then select **Security...**, and select Medium or Low.
- Exit from Excel.
- Open the Startup Profile template (in Excel).
- Enable macros if prompted.

Note: You cannot copy and paste data between cells in the Startup Profile. If you attempt this, the data validation within the spreadsheet becomes corrupt. If corruption occurs, download another copy of the Startup Profile template from the BCM main unit.

1 On a computer that has a USB port and Microsoft Excel, open the Startup Profile template (Microsoft Excel template).

If you do not have a copy of the Startup Profile template, see "To download the Startup Profile template" on page 208.

2 Refer to the **Usage Instructions** tab for instructions about using the Startup Profile template.

3 Click the **StartupProfileTemplate** tab to begin entering information in the Startup Profile template.

4 Enter your BCM system ID in the System ID field in the Startup Profile template.

The system ID is on the box of the main unit and on the main unit itself. If you enter the wrong system ID, the Startup Profile will not work with your system.

5 Click the large button at the top of the Startup Profile template to save a version of the Startup Profile (.sps file) and a version of the Startup Profile editor (Excel spreadsheet) on your computer.

The filenames for the Startup Profile editor and the Startup Profile consist of the system ID followed by the appropriate extension.

Note: Never edit the Startup Profile (.sps file) directly; always use the Startup Profile editor to make changes.

6 Enter the remaining information into the Startup Profile editor that you want loaded onto the BCM main unit.

The Startup Profile editor contains explanations of the various parameters. Click the cell where you want to enter information, and the Help text appears.

You can specify which parameters to load onto your system by selecting **Apply** for the parameters you want to load. If you do not want to load certain parameters, select **Ignore**.

7 When you have entered all the information, click the large button at the top of the Startup Profile template to save a version of the Startup Profile (.sps file) and a version of the Startup Profile editor (Excel spreadsheet) on your computer.

8 Exit from Microsoft Excel.

9 Insert the USB storage device into the USB port of the computer.

10 Copy the Startup Profile (.sps file) to the root directory of the USB storage device.

11 If you want to apply your keycode file using the Startup Profile, copy the keycode file to the root directory of the USB storage device.

The name of the keycode file on the USB storage device must exactly match the filename you entered in the Startup Profile editor.

12 Remove the USB storage device from the USB port of the computer.

The Startup Profile is now stored on the USB storage device.

To load the Startup Profile data onto the BCM system

1 Turn off the power switch at the rear of the main unit.

2 Insert the USB storage device into the USB port on the main unit.

3 Turn on the power switch at the rear of the main unit.

The BCM system automatically detects the Startup Profile file and loads the information during the bootup sequence. Loading the Startup Profile increases the time for the BCM system to boot depending on the selected parameters. See Table 76 for details about Startup Profile times and LED status.

The Startup Profile is not fully loaded until the system reboots.

Note: The Startup Profile functions only on a BCM system that does not have a keycode file applied. After a keycode file is applied, the Startup Profile does not function. This condition prevents overwriting of the parameters of a configured system.

To re-apply the Startup Profile, remove the applied keycode file by returning the system to factory defaults using the BIT tool.

---

3 Remove the USB storage device from the USB port on the BCM main unit. See Table 76 for the appropriate point in the sequence to remove the USB storage device.

Note: Make sure the bootup sequence is complete before removing the USB storage device from the BCM system.

The Startup Profile is now loaded on your BCM system.

Startup Profile times and LED sequence

Table 76 provides details about the BCM system boot times and LED sequence using the Startup Profile to configure system parameters.

Table 76 Startup Profile times and LED sequence

Duration (minutes)	Cummulative time (minutes)	Power LED	Status LED	Comments
2	2	Solid green	Flashing green	
4	6	Solid red	off	
2	8	Solid green	Solid green	Initial boot sequence complete
30	38	Solid red	Solid green	Startup Profile functioning. Duration varies depending on selected parameters.
2	40	Solid green	Flashing green Off (error)	Startup Profile is successfully applied. If there is an error the remaining steps are not completed.
4	44	Solid red	off	Duration varies based on selected parameters.
2	46	Solid green	Solid green	Reboot complete and system is functional. **Note:** You can safely remove USB device.
Note 1: If you use Element Manager to configure the parameters, the overall times are similar. Startup Profile enables you to configure multiple parameters at once, rather than individually using Element Manager. **Note 2:** To re-apply the Startup Profile, remove the applied keycode file by returning the system to factory defaults using the BIT tool.				

Next step

After you have loaded the Startup Profile, you can complete the installation process. Refer to "Completing the initial installation (optional)" on page 213 for more information.

Chapter 18
Completing the initial installation (optional)

This section provides information on completing the initial installation of your BCM system. These options are described for informative purposes and do not have to be completed.

Figure 97 shows an overview of completing the initial installation.

Figure 97 Overview of completing the initial installation

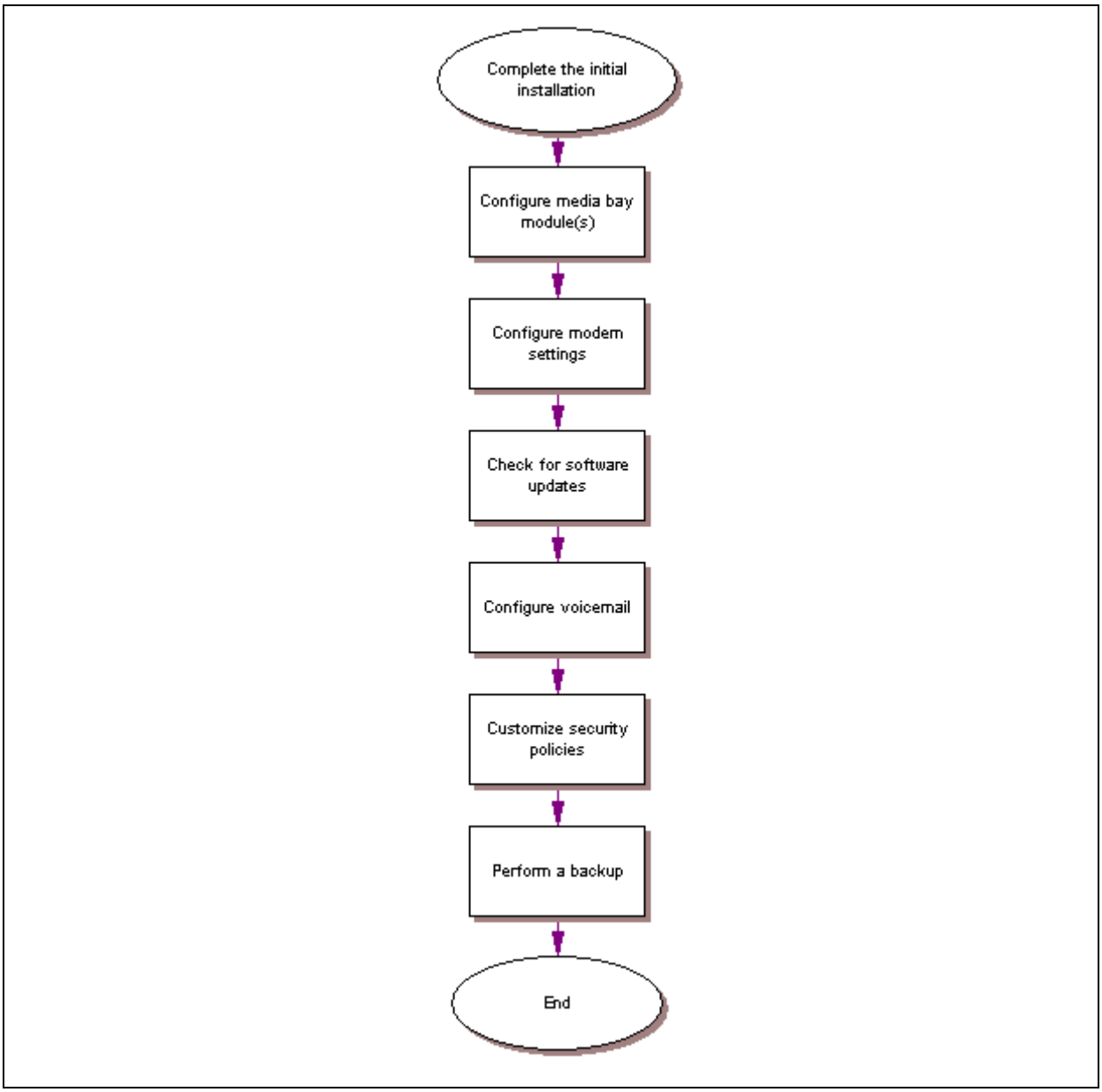

After the basic configuration is completed, you can further customize your system by using the following configuration options:

- "Configuring the media bay module"
- "Configuring modem settings" on page 215
- "Checking for software updates" on page 215
- "Configuring voice mail" on page 215
- "Customizing security policies" on page 215
- "Performing a backup" on page 216

Configuring the media bay module

For information on installing a media bay module (MBM) and setting the DIP switches, refer to "Installing a media bay module (MBM)" on page 107.

You can also refer to "Connecting the BCM expansion unit to the BCM main unit" on page 105 for more details on connecting the cables between the main unit and expansion unit.

To configure the MBM

1 Open BCM Element Manager and connect to your BCM system.

2 From the **Configuration** tab, click the **Resources** folder to expand it.

3 From the Resources folder, select **Telephony Resources** (see Figure 98).

Figure 98 Telephony Resources page

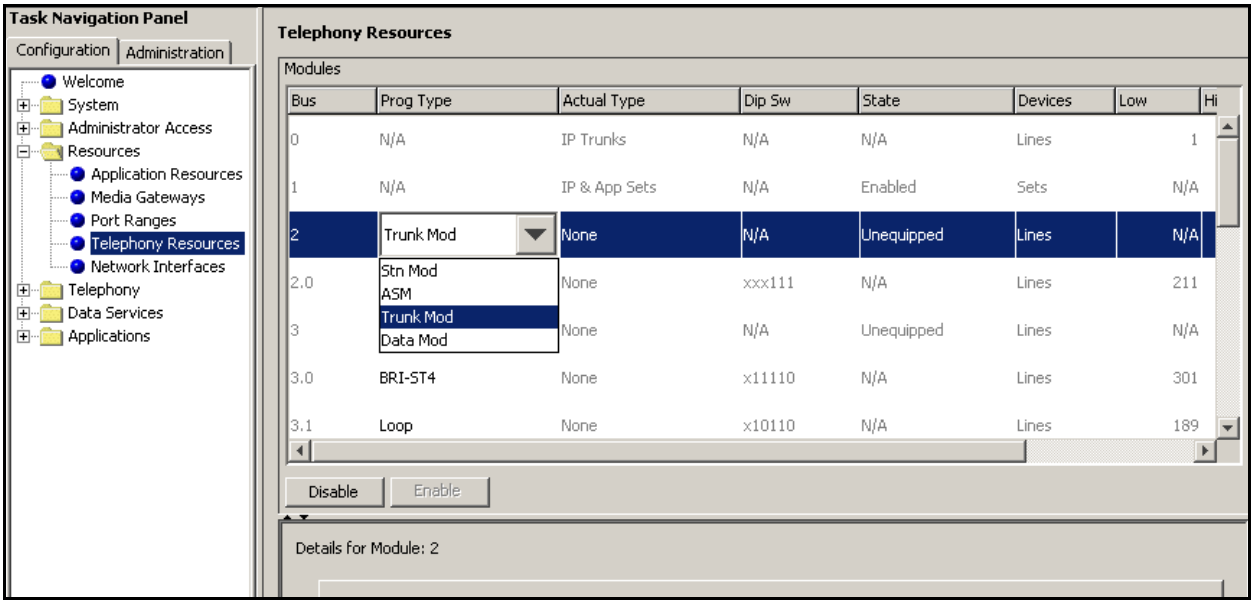

4 In the **Modules** section, select the row of the MBM that you want to configure.

5 Double-click the **Prog Type** field to display the drop-down list.

6 Select the type of MBM that you installed in that location.

7 Click **Enable**.

8 Repeat steps 4 to 7 to enable each MBM in your system.

You can set other parameters for the MBMs depending on the type of MBM you installed.

Configuring modem settings

Your system modem is either enabled or disabled, depending on the configuration you chose during your basic configuration. If you plan on using the modem for management tasks, you can customize its settings, including dial-in and dial-out settings, depending on your specific needs.

Refer to the *BCM 4.0 Networking Configuration Guide* for information on configuring the modem.

Checking for software updates

Nortel frequently updates the BCM software. Therefore, a standard part of any installation is to ensure your system has the latest version of the software.

Refer to the *BCM 4.0 Administration Guide* for information on checking for and installing software updates.

Configuring voice mail

Your voice mail system was initialized during the basic configuration of your BCM system. You must still configure your voice mail to take advantage of the many feature available.

If you need to perform further configuration tasks, refer to the documentation for your voice mail system.

Refer to the *CallPilot Manager Set Up and Operation Guide* for information on using the web-based interface to configure your voice mail system, or refer to the *CallPilot Telephone Administation Guide* for information on using Telset Administration to configure your voice mail system.

Customizing security policies

You configured a system password and security settings during the basic configuration of your BCM system. Depending on your needs, you can choose to perform further configuration of the security policies.

Refer to the *BCM 4.0 Administration Guide* for information on customizing the security policies.

Performing a backup

You can perform a backup of your BCM system at regular intervals, including after initial installation. This ensures that you have a copy of your system data available to restore the system, if needed.

Refer to the *BCM 4.0 Administration Guide* for information on performing a backup and restore of your system.

Chapter 19
System monitoring and troubleshooting

This chapter describes monitoring and troubleshooting options to determine the operational status of, or cause of malfunctions in, the BCM hardware.

This section describes the following troubleshooting topics and issues:

- "System status display LEDs" on page 218
- "Monitoring media bay module LEDs" on page 219
- "Monitoring the RAID LEDs" on page 221
- "RAID disk mirroring" on page 223
- "Monitoring or configuring disk mirror settings using Element Manager" on page 224
- "BCM system does not function" on page 228
- "Emergency telephone does not function" on page 228
- "ATA2 does not function" on page 229

Danger: Electrical shock warning.

Disconnect the power cord, telephone cables, and network cables before opening the main unit. Read and follow installation instructions carefully.

Warning: Protect the hardware components against damage from electrostatic discharge. Always wear a grounded wrist strap before you handle components. Always place the components in a static-free container.

Use Element Manager, or remote access interfaces, in conjunction with the faceplate LEDs to determine the operational state of the system hardware components.

Hardware problems are indicated by the following:

- The LEDs on the BCM base function tray, advanced function tray (RAID upgrade), or the media bay modules (MBMs) do not display normal operational status.
- The BCM system does not function at all.
- The emergency telephone does not function.
- The ATA2 does not function.

System status display LEDs

The LEDs on the BCM base function tray are part of the system status display (SSD) board. Figure 99 shows an interior view of the base function tray and the SSD board location.

Figure 99 SSD board connections

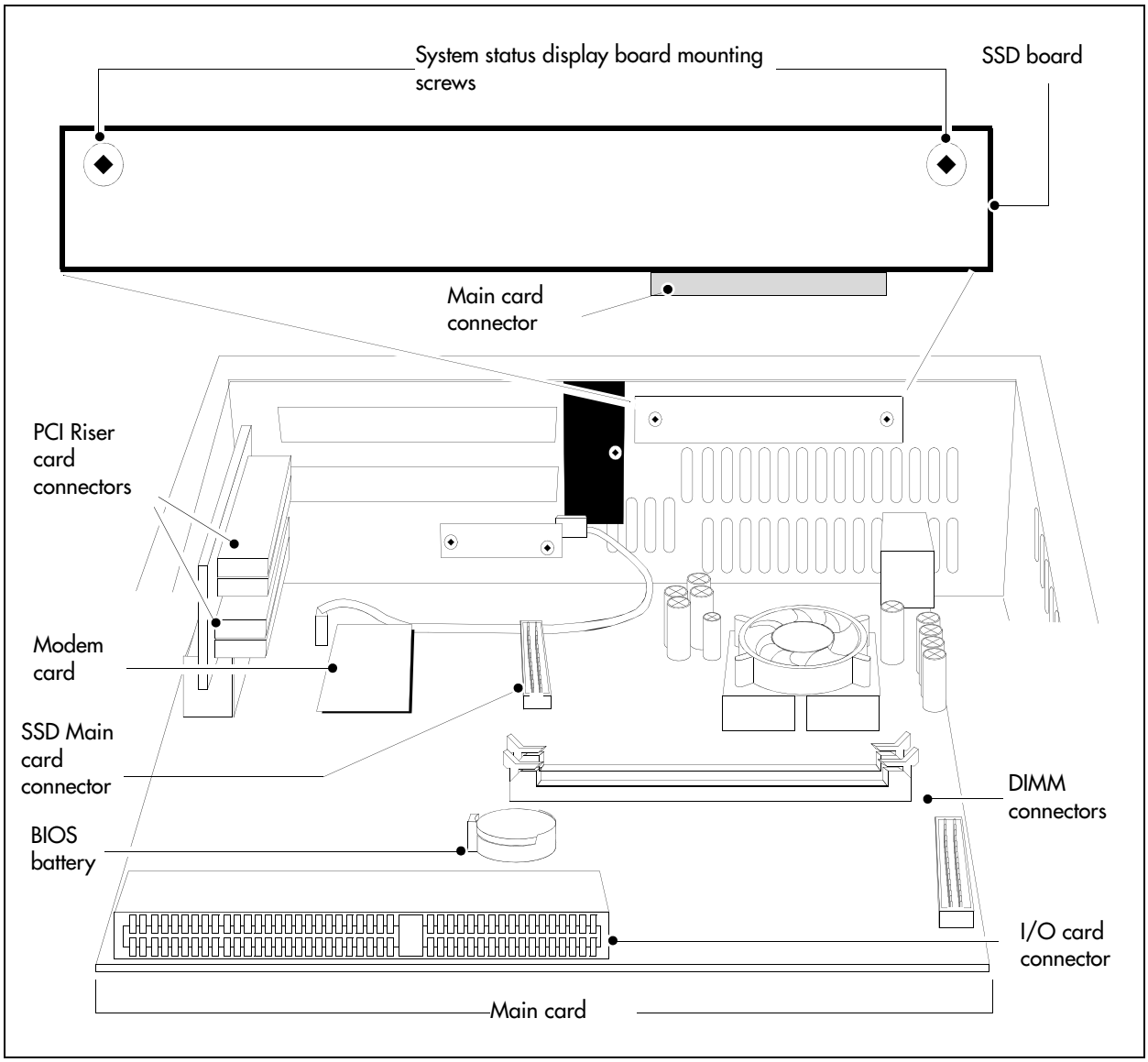

Figure 100 shows what the LEDs look like on the outside of the base function tray. The labels in the illustration indicate the hardware that each LED supports.

Figure 100 LED locations on the face of the base function tray

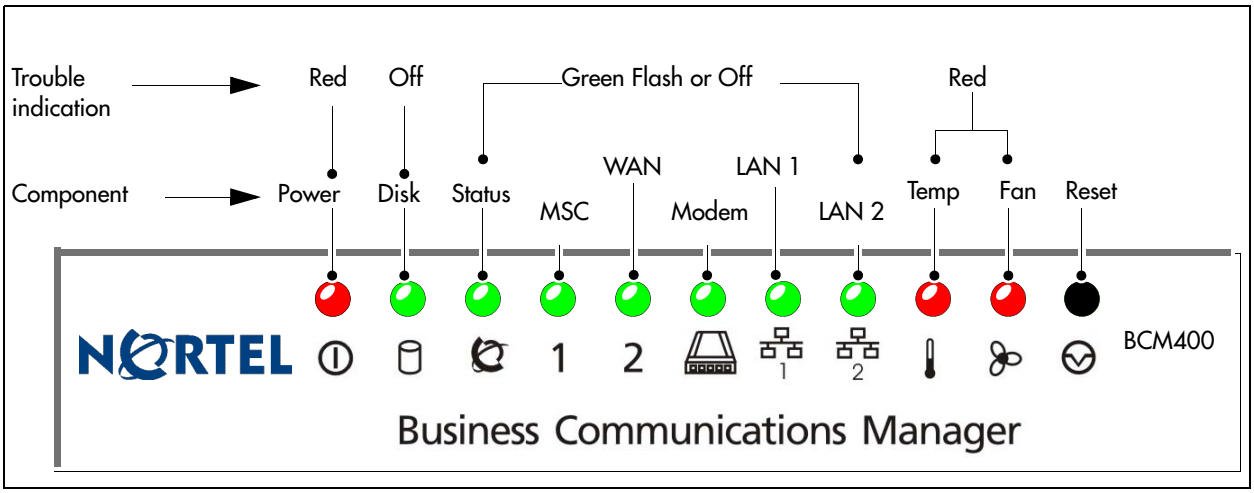

Note: The system status LEDs correspond to the devices, not to the PCI slots.

Note: LEDs 3 - 8 (inclusive) do not blink if there is a failure in the monitoring software.

Monitoring media bay module LEDs

The BCM MBMs are working when both the Power and Status LEDs on the modules are on and are not blinking.

- If the Power LED does not light, refer to "Performing a system shutdown" on page 233. After the BCM system is correctly shut down, remove the module and check the connectors at the back of the module for dust or loose connections.

  After you reinstall the module, if the LED still does not light, install a different module into that bay to check for a possible fault in the backplane. If the second module works, assume that the first module is defective and replace it with a new module.

- If the Power LED lights, but the Status light does not light, or continues to blink, wait 10 minutes to allow for information download. If the light continues to blink, power down the system and check the DIP switch settings on the module. Ensure the connector is clean and free from debris.
- If the LEDs are on solid, but the module cannot communicate or be communicated with, check the Element Manager settings for the module and the DIP switch settings on the back of the module.

All modules have power and status LEDs, as described in Table 77. When the modules are working properly, these LEDs are both solid green.

Table 77 Module power and status LED states

LED Label	Description	Green LED On	Green LED Flash	Red LED On (Only)	Green LED Off
	Indicates state of system power.	OK	N/A	A minimum of 1 PS needs attention	N/A
	Indicates condition of system status	All monitored services are functioning	In startup/shutdown mode	N/A	Not all services are working

Some types of modules also have LEDs beside the jacks or for data indicators. Refer to the information on individual modules for a description of the function of these LEDs.

The BCM system status monitor allows you to view the status of the system LEDs on your PC. This status display allows you to make preliminary decisions regarding the type of intervention required without necessarily having to inspect the BCM hardware.

Monitoring standard configuration hard disk status using Element Manager

Use the procedure described in this section to monitor the operational status of systems equipped with the standard hard disk configuration. The standard configuration uses a single hard disk.

The procedures describe monitoring and diagnosis techniques for the standard hard disk configuration.

Note: If you are using the Element Manager system status monitor function, ensure the hard disk monitoring configuration settings are set correctly.

Use the system status monitor from Element Manager to determine the operational status of the hard disk. Alternatively, examine the LED display panel on the front of the base function tray (see "Base function tray system status display LEDs" on page 79).

Note: If the hard disk fails completely in a standard configuration, the system either fails to respond or performs a software shutdown. Replace the hard disk and perform a backup using the backup and restore utility (BRU). See "Using the backup and restore utility" on page 250.

The system status monitor indicator shows hard disk access activity. A flashing green indicator signifies normal disk access activity.

To monitor hard disk status

1 Open Element Manager.

2 From the Administration tab, click **System Status**, and then click **LED Status**.

The LED Status screen appears (see Figure 101).

Figure 101 LED Status screen

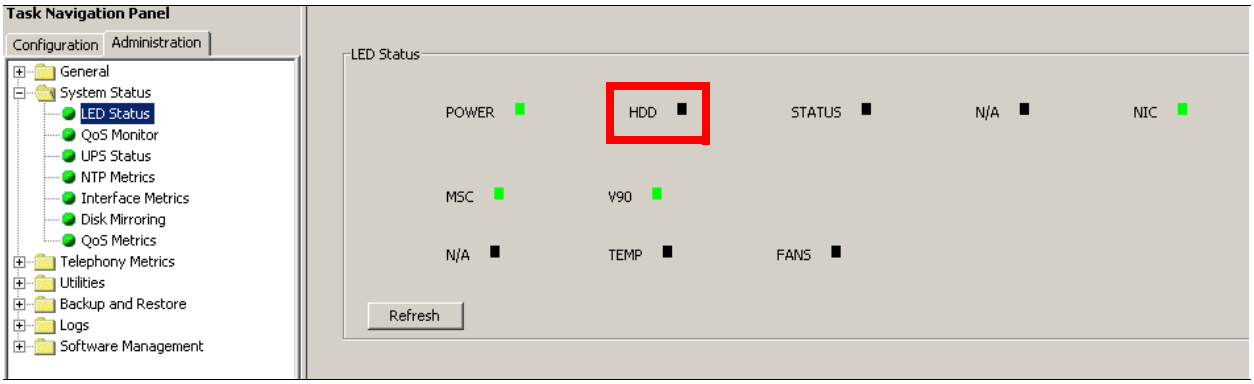

3 Verify that the indicator shows normal access to the hard disk (flashing green light).

If the hard disk fails in a single hard disk configuration, a system shutdown is either imminent, in progress, or complete. Replace the hard disk (see "Replacing a hard disk in the hard disk cage" on page 266).

Monitoring the RAID LEDs

Use this procedure to determine the current operational state of the RAID hard disks and disk mirroring operation (see Figure 102). The RAID status LEDs are visible only for systems equipped with the RAID configuration. Three LEDs are located on the bezel face of the BCM400 advanced function tray or on the hard disk access panel at the rear of the BCM200 main unit.

The RAID LEDs indicate monitoring of the following:

- Primary master hard disk activity
- Mirror hard disk activity
- RAID disk mirroring status activity

Figure 102 Advanced function tray RAID status LEDs

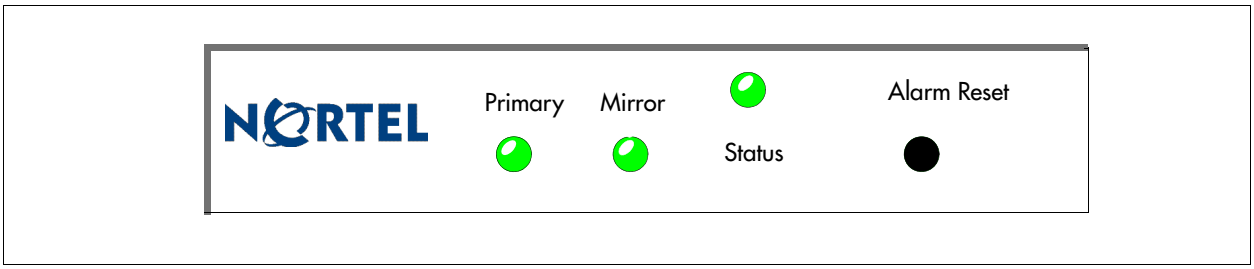

To determine RAID status

1 Examine the Primary and Mirror LEDs on the BCM400 advanced function tray faceplate. Alternatively, examine the hard disk cover access panel on the rear of the BCM200. Use Table 78 to interpret the operational state of the RAID primary master and mirror master hard disks and perform any associated maintenance action if required.

Table 78 Primary/Mirror master hard disk LED description

Primary/Mirror LED color	Description	Maintenance action
Solid Green	Drive installed and initialized on the current channel	Normal operation — no maintenance required
Flashing Orange	Indicates disk activity	Normal disk mirror function — no maintenance required
Orange	Channel activity (read/write)	Normal operation during disk mirror function — no maintenance required
Solid Red	Drive not installed or failed	Immediate action required: • Check the RAID operational status • Check hard disk power and data connections • Replace the hard disk if required

2 Examine the mirror mode Status LED on the BCM400 advanced function tray faceplate. Alternatively, examine the hard disk cover access panel on the rear of the BCM200. Use Table 79 to interpret the operational state of the disk mirror function. Perform any associated maintenance action if required.

Table 79 Status LED description (Sheet 1 of 2)

Status LED description	Description	Maintenance action
Solid green	Drives are in mirror mode. Data is identical.	Normal operation -— no maintenance required
Orange	Copy or compare is in progress.	Normal operation — no maintenance required

Table 79 Status LED description (Sheet 2 of 2)

Status LED description	Description	Maintenance action
Flashing green	Drives may not be identical.	Indicates a data comparison fault. For 3.5x version software (and later), the system automatically adapts for data mismatches and unequal hard disk capacity. The system attempts a disk mirror rebuild. The system continues to operate. Nortel recommends that you perform the following: • Examine the status report to determine which hard disk has the smaller capacity. • Replace the smaller hard disk (primary master or mirror master) with a new hard disk of the correct size. Equipment provided by Nortel assures correct hard disk capacity requirements.
Solid red	• Drives are not in mirror mode. • Missing or bad hard disk (1 or both). • Occurs on newly installed RAID card or hard disk (first 10 min). SSM begins mirror process — no action required. • SSM determined BCM is not initialized (core software, WAN, MSC).	Immediate action required: • Check the RAID operational status. • Check hard disk power and data connections. • Replace the hard disk if required. • Initialize the BCM system.

RAID disk mirroring

The RAID configuration (RAID 1) uses two hard disks. One disk is called the primary master hard disk and the other is called the mirror master hard disk. Disk mirroring is the process of ensuring the data from one hard disk is identical to the other.

Disk mirroring provides data redundancy and fault tolerance should one disk fail. The mirror hard disk continues to function and the system operates without any loss of service if the primary master hard disk fails. Similarly, the primary master hard disk continues to function and the system operates without any loss of service if the mirror hard disk fails.

Over time, configuration or load data on your system changes. The system writes the new data to both disks simultaneously.

Note: Under some conditions, the system will halt operating if a hard disk fails during a read/write to the operating system (O/S) portion of the hard disk. To continue operation, reboot the system.

The RAID configuration disk replacement scenarios are as follows:

- If you replace a RAID hard disk on site, the BCM system status monitor service automatically detects the presence of a RAID device. The system copies the data from the programmed disk to the blank replacement disk. In this case, the programmed hard disk is the mirror master.
- If you replace a RAID primary master disk on site, the mirror master disk acts as the primary data source (mirror master). The system status monitor service identifies the new blank primary master disk and instructs the RAID to copy the data from the mirror master disk to the primary master disk. In this case, the mirror master hard disk is the mirror master.

Use one of the following two methods to access the disk mirror functions:

- "Monitoring or configuring disk mirror settings using Element Manager" on page 224
- "BCM system does not function" on page 228

The disk mirror function allows you to:

- monitor RAID card operational status
- monitor disk operational status
- monitor disk mirror status
- change a standard hard disk configuration to a RAID configuration
- replace a primary master or mirror master hard disk in an existing RAID configuration

Monitoring or configuring disk mirror settings using Element Manager

Use the procedures in this section to ensure all disk mirroring configuration settings are correct. Use Element Manager to change the disk mirror settings to the default values if required. The procedures described in this section are valid only for those systems equipped with a RAID configuration.

Accessing disk mirroring through Element Manager

Use this procedure to review the primary master and mirror master hard disk settings on systems equipped with a RAID configuration. Use Element Manager in this procedure to monitor the RAID disk mirror operation.

Note: You must ensure the system status monitor service is running to monitor primary master and mirror master disk operation and disk mirroring activity.

To access disk mirroring

1. Access Element Manager after system bootup is complete.
2. From the **Administration** tab, click **System Status**, and then click **Disk Mirroring**.

   The Disk Mirroring screen displays (see Figure 103).

3 In the **Settings** area, ensure the following fields display the default values as shown (see Table 80):

a Operation Mode = Mirror Mode

b Beep on drive failure = Every 30 seconds (you can configure the interval between beeps).

Note: On some systems, if the RAID card fails, the audible alarm sounds continuously for 15 seconds. After the 15 second period, the beep alarm sounds in accordance to the beep timing setting.

Figure 103 Disk mirror settings screen

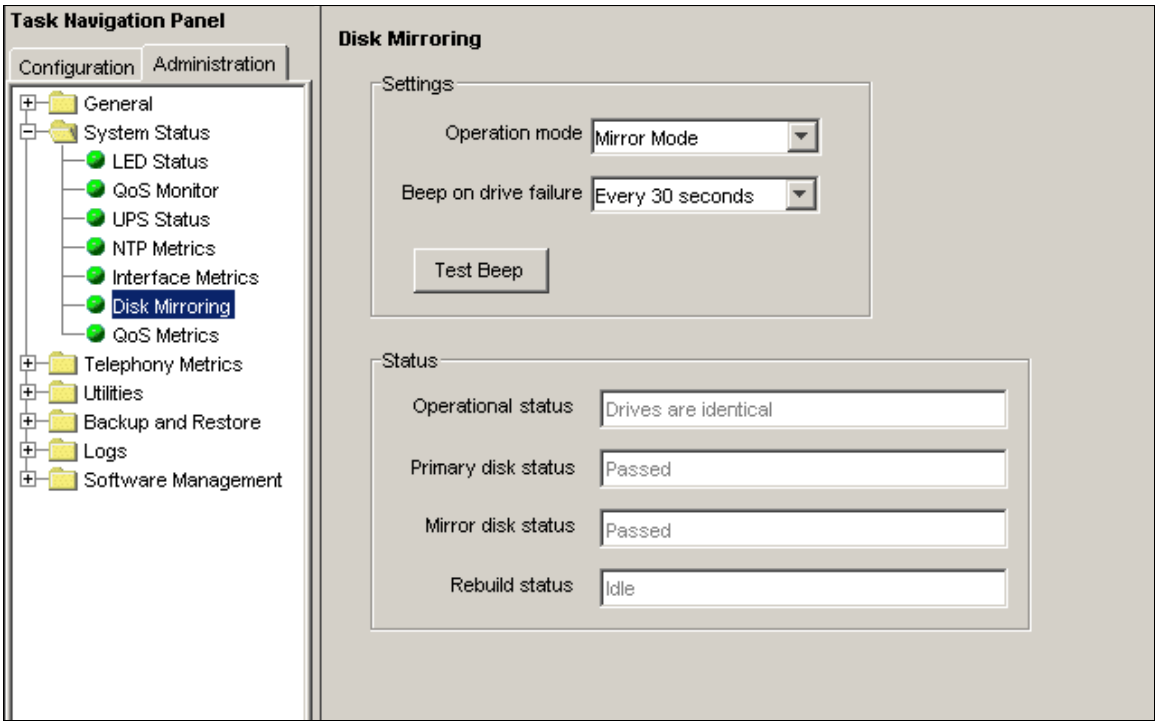

Table 80 Setting field descriptions and actions

Settings field description	Perform the activity
Operation Mode: Options available are Primary Only, Mirror Only, or Mirror Mode (default value).	Nortel recommends that you select **Mirror mode** from the drop-down menu You can disable the mirroring function and operate from either the primary master or the mirror master drive only. Use this option to isolate drive problems.
Beep on drive failure: Options available are disabled, continuously, Every 5 seconds, or Every 30 seconds (default value).	Select the beep timing interval for alarm notification. On some systems, if the RAID card fails, the audible alarm sounds continuously for 15 seconds. After the 15 second period, the beep alarm sounds in accordance to the beep timing setting.

Monitoring RAID disk mirror operational status using Element Manager

Use this procedure to monitor the primary master and mirror master hard disk activity on systems equipped with a RAID configuration. Use Element Manager in this procedure to monitor the RAID disk mirror operation.

Note: You must ensure the system status monitor service is running to monitor primary master and mirror master disk operation and disk mirroring activity.

To monitor RAID disk mirror operational status

1 Open Element Manager.

2 From the **Administration** tab, click **System Status**, and then click **Disk Mirroring**.

The Disk Mirroring screen displays.

3 Click on the **Status** tab

The Disk Mirroring screen displays the operational status of primary master and mirror master disks.

4 Confirm that the status for the disk mirroring activity is correct (see Table 81). To produce a status report, refer to "Accessing the RAID status report using Element Manager".

Table 81 Status field descriptions

Status field	Description
DupliWin.dll Version	Read-only field that displays the RAID software version. The latest load always has the latest RAID software.
Primary Master Status	Read-only field that displays the status of the primary master disk (Passed/Failed/NA). • If the field indicates Passed, the drive is operating normally • If the field indicates Failed, check the power and IDE ribbon cable connections or replace the faulty hard disk • If the field indicates N/A (not available), check the hard disk power and IDE ribbon cable connections
Mirror Master Status	Read-only field that displays the status of the mirror master disk (Passed/Failed/NA) • If the field indicates Passed, the drive is operating normally • If the field indicates Failed, check the power and IDE ribbon cable connections or replace the failed hard disk • If the field indicates N/A (not available), check the hard disk power and IDE ribbon cable connections
Rebuild	Read-only field that displays the mirror data rebuild progress (idle/started)

Accessing the RAID status report using Element Manager

Use the procedure in this section to display a status report that summarizes primary master and mirror master hard disk installation and operational information. The status report is valid only for systems equipped with a RAID configuration.

Note: You must ensure the system status monitor service is enabled to monitor primary master and mirror master disk operation and disk mirroring activity.

To access the RAID status report

1 Open Element Manager.

2 From the **Administration** tab, click **System Status**, and then click **Disk Mirroring**.

The Disk Mirroring screen displays, which displays the hard disk operational status information.

3 Confirm that the primary master and mirror master hard disks are functional (see Table 82).

Table 82 Step table

If	Then perform the activity
The hard disks are not identical.	Use Nortel equipment to ensure the hard disks meet minimum requirements.
The software has detected unequal hard disk storage capacity.	For 3.5x version software (and later), the system automatically adapts for unequal hard disk capacity. The system continues to operate. Nortel recommends that you perform the following: • Examine the status report to determine which hard disk has the smaller capacity. • Replace the smaller hard disk (primary master or mirror master) with a new hard disk of equal size (or larger).
The RAID is not in mirror mode.	Change the disk mirroring function to mirror mode.
A hard disk is not operational.	Exchange the malfunctioning hard disk with a new hard disk.

Monitoring disk mirroring using Element Manager

Use this procedure to verify and monitor the disk mirroring process. Disk mirroring is the process of duplicating the data from one hard disk to the other. After RAID installation and system bootup, the system automatically detects the presence of a RAID configuration and begins the disk initialization and mirroring process. This procedure is valid only for those systems equipped with a RAID configuration.

Monitor disk mirroring progress in tandem with the RAID LED status indicators.

Note: The mirroring process can take up to 3 hours to complete. The BCM system continues to operate normally during the disk mirroring process. However, because disk mirroring occupies computing resources, Nortel recommends that you perform disk mirroring during a period of low call traffic.

Nortel recommends that you perform any system reboot only as required and at the beginning of the disk mirroring process.

To monitor disk mirroring

1. Open Element Manager after system boot-up is complete.
2. From the **Administration** tab, click **System Status**, and then click **Disk Mirroring**.

   The Disk Mirroring screen displays (see Figure 103).
3. Select **Reports** and click **Drive Status**.

   The progress indicator shows the current state of the mirroring process.

BCM system does not function

The BCM system can experience a complete failure for any of the following reasons:

- Power supply failure
- Incorrect power supply connections
- AC power failure

Emergency telephone does not function

If the emergency telephone is connected to the system, refer to "To troubleshoot the emergency telephone on the system" on page 228.

If the emergency telephone is connected to the CTM, refer to "To troubleshoot the emergency telephone connected to a CTM" on page 229.

To troubleshoot the emergency telephone on the system

1. Check the power LED on the ASM8 to check that the ASM8 is receiving power.
2. Check that the emergency telephone has dial tone.
3. Check the external line and emergency telephone connections.
4. To avoid damage to the emergency telephone, connect the telephone directly to the external line and check for dial tone.
5. Replace the MSC.

To troubleshoot the emergency telephone connected to a CTM

1. Check that the system has a CTM installed.
2. Check that there is no dial tone at the emergency telephone.
3. Replace the CTM.

ATA2 does not function

If the BCM ATA2 does not function, use these procedures to troubleshoot the problem.

To troubleshoot the ATA2

1. Make sure there is AC power connected to the ATA2 unit.
2. Make sure that the ATA2 is in the tones off mode (for data applications only).
3. Correctly configure the ATA2 telephone port for data communication.
4. Allow sufficient start-up time.
5. Assign the prime line.
6. Assign a ringing line if required. For example, auto-answer modems and fax machines require a ringing line.

To check the ATA 2 wiring

1. ATA2 to the terminal. The resistance must be 200 ohms or less for data applications and 1,300 ohms or less for voice applications.
2. BCM system to ATA2. The wiring must be equivalent to 800 m of 0.5 mm wire (2,600 ft. of 24 AWG) or less. Do not use bridge taps and loading coils between the BCM system and ATA2.
3. External line to the BCM system. Ensure the external line is correctly connected to the BCM system and make sure there is dial tone.

To check for dial tone at the ATA 2

1. If there is no dial tone, replace an analog telephone for the data communication device.
2. If there is no dial tone at the ATA2 unit:
   a. Disconnect the line side of ATA2. Connect a BCM telephone to the ATA2 port.
   b. Check that the connection from ATA2 to the BCM system is functioning correctly (the telephone has dial tone).

To check for trunk line dial tone to the ATA 2

1. Disconnect the ATA2 external line from the BCM system and connect the data device directly to this external line.
2. Make a call.
3. If the problem continues, the device or the external line is possibly at fault.
4. Plug the device into a different line.
5. If the problem continues, the device is possibly at fault.

For more information about ATA2, contact your customer service representative.

Chapter 20
Preparing hardware for maintenance or upgrades

This chapter describes how to prepare the BCM system for maintenance activities. The following primary topics are covered in this chapter:

- "Precautions" on page 231
- "Special tools" on page 233
- "Performing a system shutdown" on page 233
- "Restarting the system after maintenance" on page 234
- "Base function tray maintenance procedures" on page 235
- "Advanced function tray maintenance procedures" on page 241
- "Removing and installing the main unit top cover" on page 246
- "Using the backup and restore utility" on page 250

Precautions

Before you replace or update any hardware on the BCM system, disconnect the system from the trunk lines.

Remove the top cover to access the standard power supply, I/O card, or backplane components. For fan, hard disk, or power supply maintenance, remove the appropriate chassis panels. Remove the base function tray to replace any PCI cards. Remove the advanced function tray from the BCM400 main unit to replace or upgrade the hard disk. If applicable, remove the main unit from the server rack.

Observe the following precautions when working inside the BCM system. Maintain a clean and static-safe site.

Danger: Electrical shock warning

Disconnect the power cord, telephone cables, and network cables before opening the BCM main unit. Read and follow installation instructions carefully.

Danger: Electrical shock warning

Partially remove the power supply module from the power supply cage. Do not completely remove the power supply module. **IMPORTANT**: Wait several seconds before removing the power supply module completely from the power supply cage to ensure complete electrical discharge.

Caution: Use only a Nortel-approved replacement. Contact your account representative for the current list of approved replacement parts.

Warning: Maintain a current backup of your system

When you replace the hard disk, you must restore the BCM system programming from the backup.

Caution: Do not use an electric or magnetized screwdriver near the hard disk. You can lose the information stored on the disk. Shock can damage the hard disk. Do not drop or hit the hard disk drive.

Warning: You must remove all of the connections to the BCM base function tray before you power the system down. Failure to disconnect lines before power down can cause damage to the system.

Warning: Protect the hardware components against damage from electrostatic discharge. Always wear a grounded wrist strap before you handle components. Always place the components in a static-free container.

Figure 104 provides an overview of the process for preparing the BCM system hardware for maintenance or upgrade procedures.

Figure 104 Prepare for maintenance overview

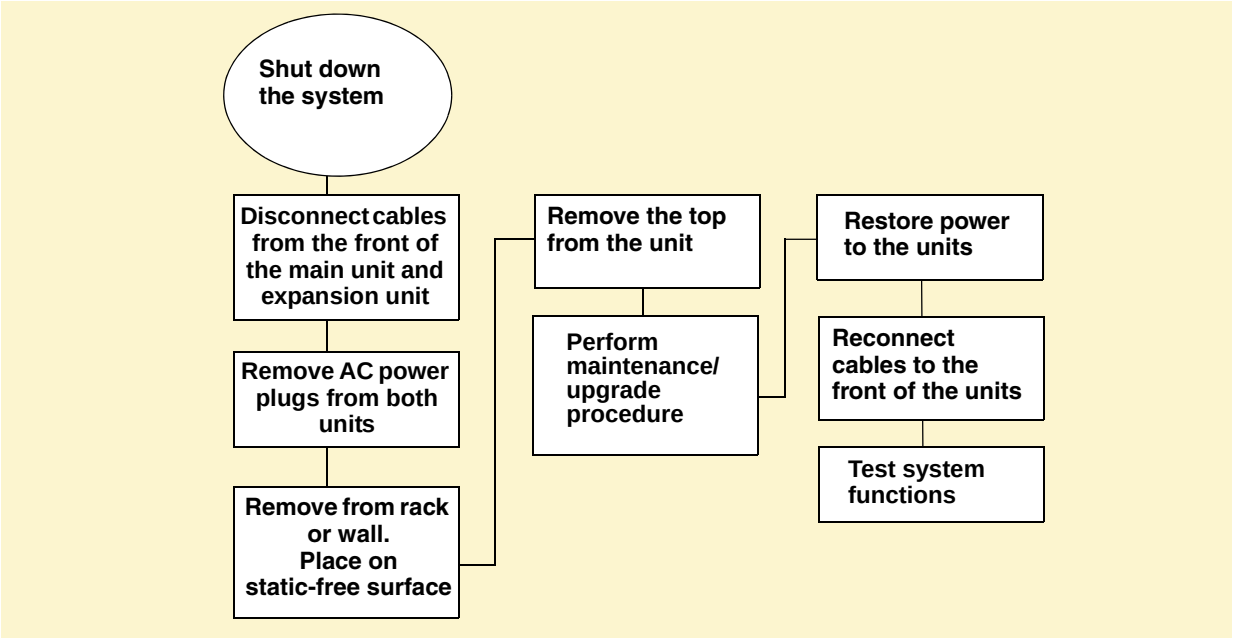

Special tools

Before you replace the components, ensure you have the following equipment:

- Phillips screwdriver #2, with a blade 3.5 in. long
- 3/16 inch slot screwdriver
- antistatic wrist grounding strap

Warning: You must wear an antistatic grounding strap at all times when handling electronic components. Failure to do so can result in damage to the equipment.

Performing a system shutdown

If there is a need to perform maintenance, the system may already be powered down. If this is the case, proceed to "To shutdown the system hardware" on page 234.

If the system is still operating, perform the following procedures:

- "To shut down the system software" on page 233
- "To shutdown the system hardware" on page 234

To shut down the system software

1. Check for a recent backup of the BCM system programming.
2. If there is no recent backup, use Element Manager to back up the system data. For information about backing up the system data, refer to the *BCM 4.0 Administration Guide*.
3. In Element Manager, from the **Administration** tab, click the **Utilities** folder to expand it.
4. From the Utilities folder, select **Reset**.
5. Click **Shutdown System** to prepare the system for power disconnect.

   This action will stop all services. All Element Manager sessions will be disconnected from the system. The BCM system can be restored to service only by powering the BCM system off and back on again.
6. Click **Ok**.

   The progress update dialog box appears and the BCM system begins the shutdown process.

   When the shutdown process is complete, the final warning dialog box appears, and the LEDs enter the flashing state.
7. Click **Ok** to disconnect Element Manager.

   When the shutdown Element Manager is disconnected, the system gives an audible beep. The LEDs remain in the flashing state until the hardware is shutdown (see "To shutdown the system hardware" on page 234).

   If the system hardware is not shutdown within about 15 minutes, it automatically boots up again.

To shutdown the system hardware

Warning: Remove all of the connections to the BCM system before you power down the system.

Failure to disconnect lines before you power down the system can cause damage to the system.

1. Remove the DS256 cables from the front of the BCM main unit and, if present, the expansion unit. This includes the data connections on the MSC.

   Mark the cables to ensure correct reconnection.

Warning: You must disconnect power from the main unit after you have performed an Element Manager shutdown. The main unit cannot start operating again until after power has been disconnected and then reconnected.

2. Turn off the power switch located at the back of the BCM main unit and expansion unit.
3. Disconnect the BCM main unit and expansion unit power cords from the AC outlet.
4. Ensure you have room to access the part you are working on. Remove the BCM main unit from the rack, if necessary.

Restarting the system after maintenance

When you finish your shutdown maintenance procedure, restart the BCM system in the order described in this section.

To restore the system to operation

1. Ensure that all cables inside the housing are connected snugly to the correct boards, and excess cables are bundled neatly, out of the way.
2. Replace the bezel on the BCM main unit, if you removed it.
3. Replace the main unit top cover and replace the screws.
4. If you removed the BCM main unit from the rack or wall, replace it.
5. Plug the expansion unit, if there is one, into the AC power source.
6. Plug the BCM main unit into the AC power source.
7. Turn on the power switch on the BCM main unit.

   The BCM system starts booting.

Warning: When you restart the system, all IP clients, voice mail, and VoIP ports are not available until the system services restart.

8 Replace all the connectors to the front of the units. The reboot can take several minutes to complete.

Base function tray maintenance procedures

The base function tray contains the core processing components. To prepare for base function tray removal, perform a software and hardware shutdown (see "Performing a system shutdown" on page 233).

Use this procedure only under the following conditions:

- to replace the MSC, modem, memory DIMMs, battery, PEC III, or WAN (if applicable)
- to replace the base function tray. Remove the components from the old base function tray and install them in the replacement base function tray.

Danger: Electrical shock warning. Disconnect the power cord, telephone cables, and network cables before opening the computer. Read and follow installation instructions carefully.

Caution: Use only a Nortel-approved replacement parts. Contact your account representative for the current list of approved replacement parts.

Warning: Protect the hardware components against damage from electrostatic discharge. Always wear a grounded wrist strap before you handle components. Always place the components in a static-free container.

Use the flowchart shown in Figure 105 as a summary guide to replace the base function tray.

Figure 105 Base function tray replacement overview

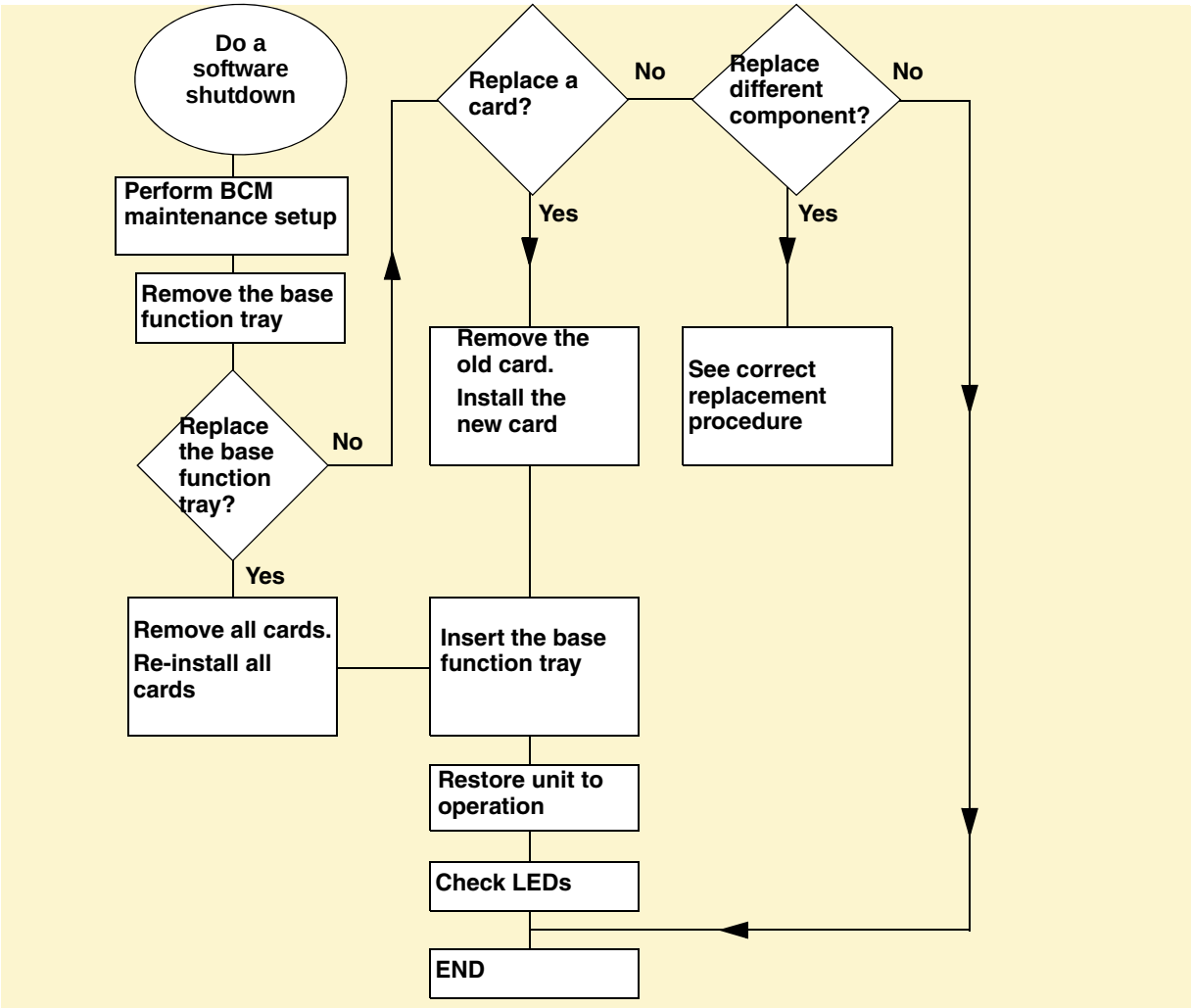

Removing the base function tray

This procedure describes how to remove the base function tray to perform maintenance or replacement activities.

Warning: Protect the hardware components against damage from electrostatic discharge. Always wear a grounded wrist strap before you handle components. Always place the components in a static-free container.

Warning: Use care when removing or inserting the base function tray. Do not forcefully remove or insert the base function tray because you could damage or stretch the cables.

To remove the base function tray

1 Shut down the system (see "Performing a system shutdown" on page 233).

2 Disconnect the BCM system from the AC power outlet.

3 Disconnect any connectors from the front of the base function tray.

4 Attach one end of the grounding strap to your wrist and the other end to a grounded metal surface.

5 Remove the main unit top cover. Refer to "Removing the main unit top cover" on page 246.

6 Remove the base function tray latch screws and place them in a safe location.

7 Move the base function tray latches to the unlocked position. See Figure 106.

8 Grasp the base function tray latches and partially remove the base function tray from the main unit. Do not exert force on the DS30 cables or connectors.

9 Disconnect the DS30 cable connectors from the media services card. If necessary, remove the WAN card to access the DS30 cables, see "To remove the WAN card" on page 303.

Figure 106 Remove the base function tray

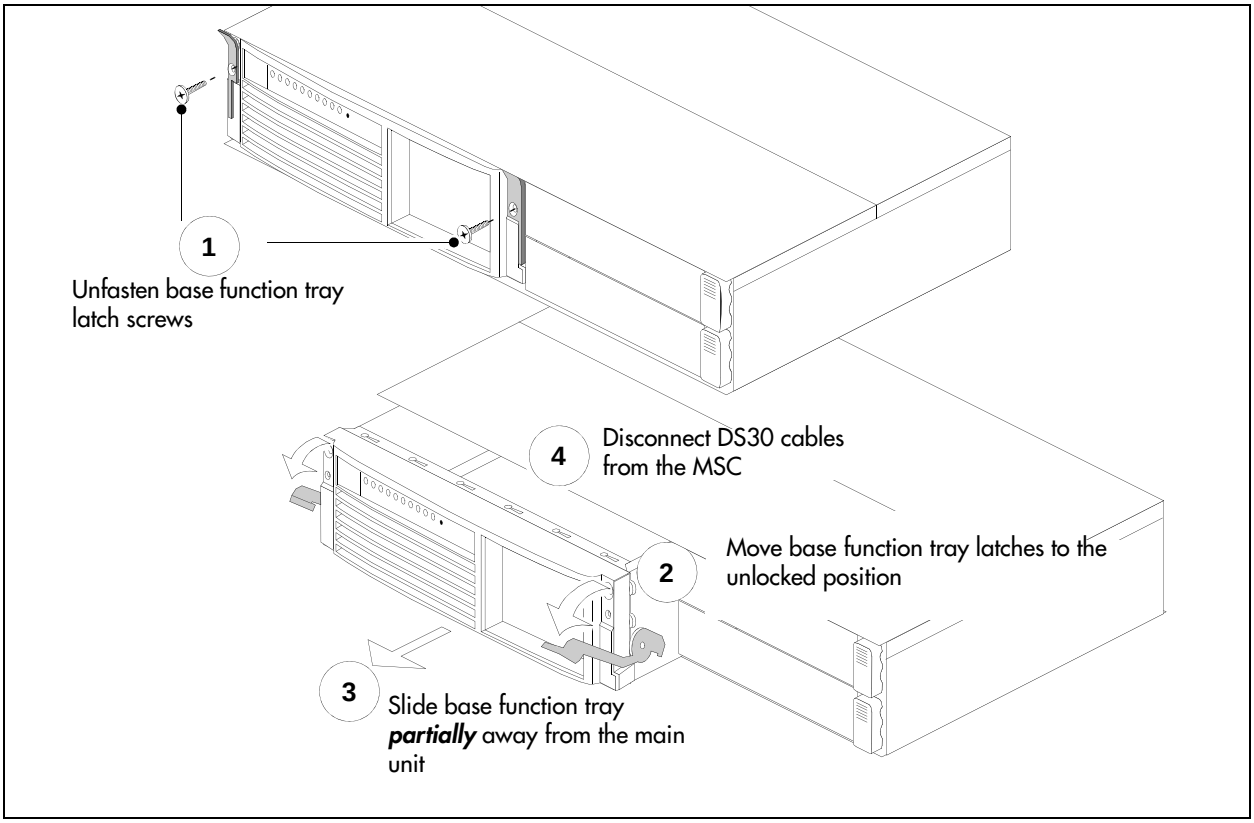

10 Remove the base function tray completely from the main unit. Remove the base function tray carefully to prevent damage to the cables and connectors.

11 Place the base function tray on a flat, clean, and static-free surface.

To install the base function tray

Warning: Protect the hardware components against damage from electrostatic discharge. Always wear a grounded wrist strap before you handle components. Always place the components in a static-free container or work area.

Warning: Use care when removing or inserting the base function tray. Do not forcefully remove or insert the base function tray because you could damage or stretch the cables.

1. Disconnect the BCM system from the AC power outlet.
2. Attach one end of the grounding strap to your wrist and the other end to a grounded metal surface.
3. Move the base function tray latches to the unlocked position.
4. Position the base function tray in the correct main unit bay.
5. Partially insert the base function tray into the main unit (see Figure 107).
6. Connect the DS30 connectors to the MSC. If necessary, install the WAN card (see "Installing the WAN card" on page 304).
7. If required, install the base function tray bezel (see "To install the base function tray bezel" on page 240).
8. Push the base function tray completely into the main unit. Be careful not to crimp the DS30 cables.
9. Move the base function tray latches to the locked position.
10. Install the base function tray latch screws.

Figure 107 Install the base function tray

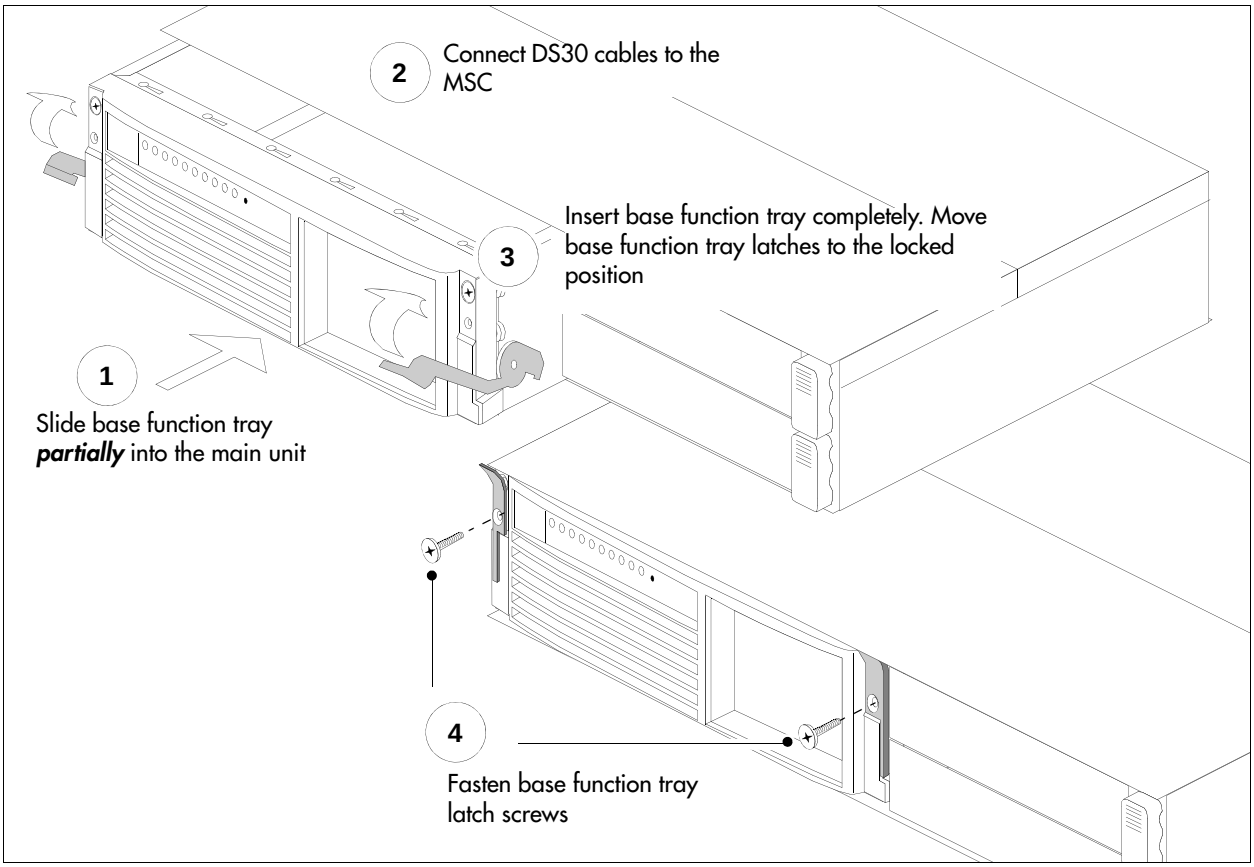

11 Insert all connectors in the correct locations on the base function tray face.

12 Restore the BCM system to operation. See "Restarting the system after maintenance" on page 234.

13 Observe the system status monitor LEDs to ensure the base function tray initializes correctly.

To remove the base function tray bezel

Warning: Protect the hardware components against damage from electrostatic discharge. Always wear a grounded wrist strap before you handle components. Always place the components in a static-free container.

Warning: Use care when removing or inserting the base function tray. Do not forcefully remove or insert the base function tray because you could damage or stretch the cables.

1 Shut down the system (see "Performing a system shutdown" on page 233).

2 Disconnect the BCM system from the AC power outlet.

3 Disconnect any connectors from the front of the base function tray.

4 Attach one end of the grounding strap to your wrist and the other end to a grounded metal surface.

5 Remove the base function tray latch screws and place them in a safe location.

6 Move the base function tray latches to the unlocked position. See Figure 106.

7 Grasp the base function tray latches and partially remove the base function tray from the main unit. Do not exert force on the DS30 cables or connectors.

8 Unfasten the bezel screws from the base function tray face. Place the screws in a safe location.

9 Pull and tip the bezel away from the base function tray until the bezel clips are clear of the base function tray chassis. Move the bezel in a downward direction between the base function tray latches. Place the bezel in a safe location. See Figure 108.

Figure 108 Remove the base function tray bezel

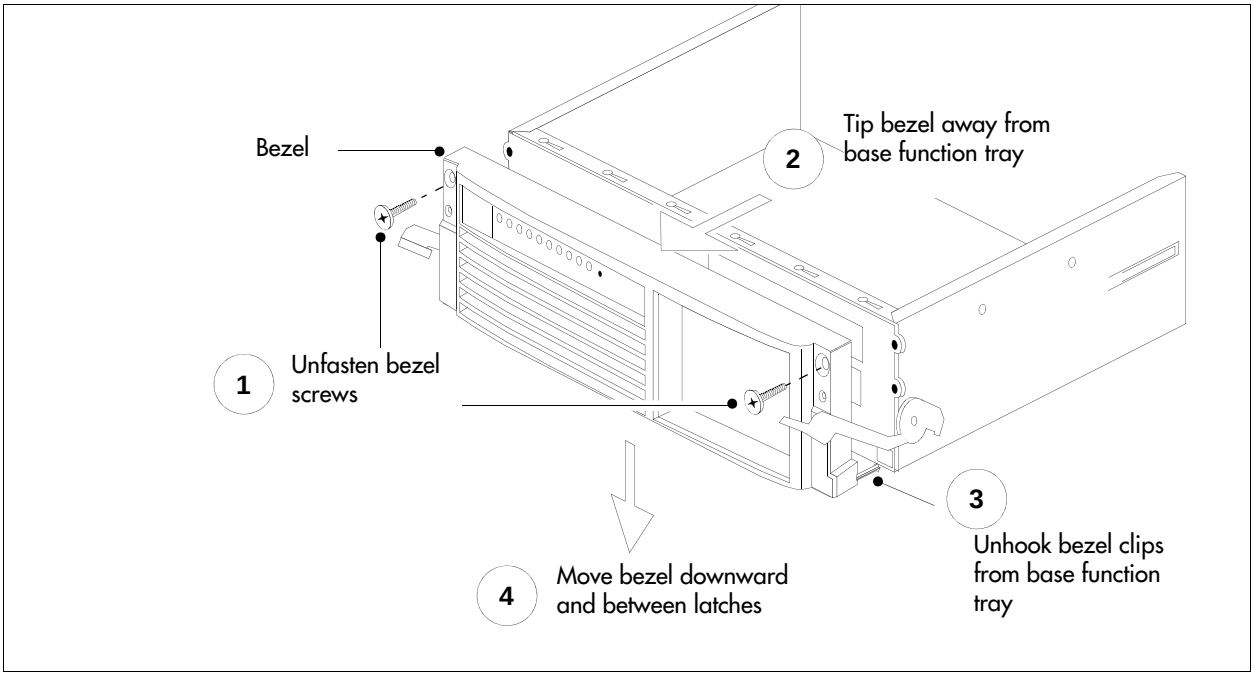

To install the base function tray bezel

Warning: Protect the hardware components against damage from electrostatic discharge. Always wear a grounded wrist strap before you handle components. Always place the components in a static-free container or work area.

Warning: Use care when removing or inserting the base function tray. Do not forcefully remove or insert the base function tray because you could damage or stretch the cables.

1. Disconnect the BCM system from the AC power outlet.
2. Attach one end of the grounding strap to your wrist and the other end to a grounded metal surface.
3. Remove the base function tray latch screws (if applicable). Place the screws in a safe location.
4. Move the base function tray latches to the unlocked position.
5. Position the bezel below and between the base function tray latches. Lift the bezel until the bezel clips line up with the corresponding base function tray bezel holes.
6. Tilt the bezel forward, then push the bottom of the bezel into the base function tray to engage the bezel clips.
7. Push on the face of the bezel so that it rests flush with the face of the base function tray.
8. Install the base function tray bezel screws. See Figure 109.

Figure 109 Install the base function tray bezel

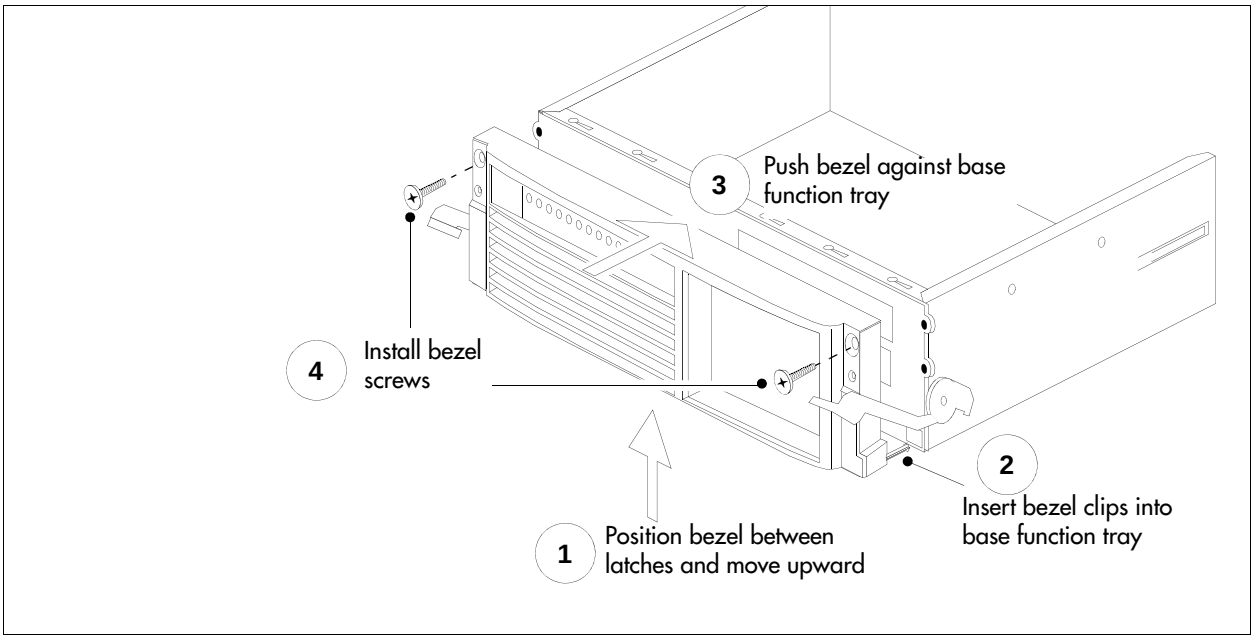

9. If required, install the base function tray in the main unit. Refer to "To install the base function tray" on page 238.

Advanced function tray maintenance procedures

This procedure applies only to the BCM400 system. This procedure describes how to remove and install the advanced function tray in the main unit. Use this procedure for maintenance purposes.

The advanced function tray houses the hard disk or RAID components for the BCM400 system (see Figure 110). For further information also see "BCM400 advanced function tray" on page 39.

Figure 110 Advanced function tray

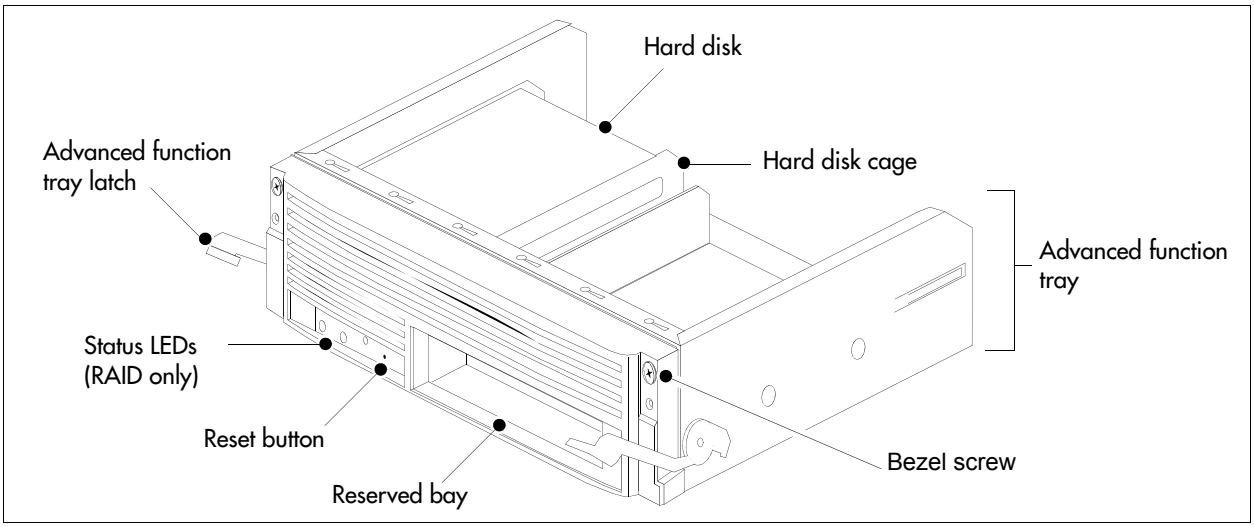

For information on how to replace the hard disk, refer to "Removing a hard disk cage from a BCM400 advanced function tray" on page 261.

Danger: Electrical shock warning

Disconnect the power cord, telephone cables, and network cables before opening the BCM main unit. Read and follow installation instructions carefully.

Caution: Use only a Nortel-approved replacement. Contact your account representative for the current list of approved replacement parts.

Warning: Use care when removing or inserting the advanced function tray. Do not forcefully remove or insert the advanced function tray because you could damage or stretch the cables.

Warning: Protect the hardware components against damage from electrostatic discharge. Always wear a grounded wrist strap before you handle components. Always place the components in a static-free container or work area.

Use the flowchart shown in Figure 111 as a summary guide to maintain the advanced function tray.

Figure 111 Advanced function tray replacement overview

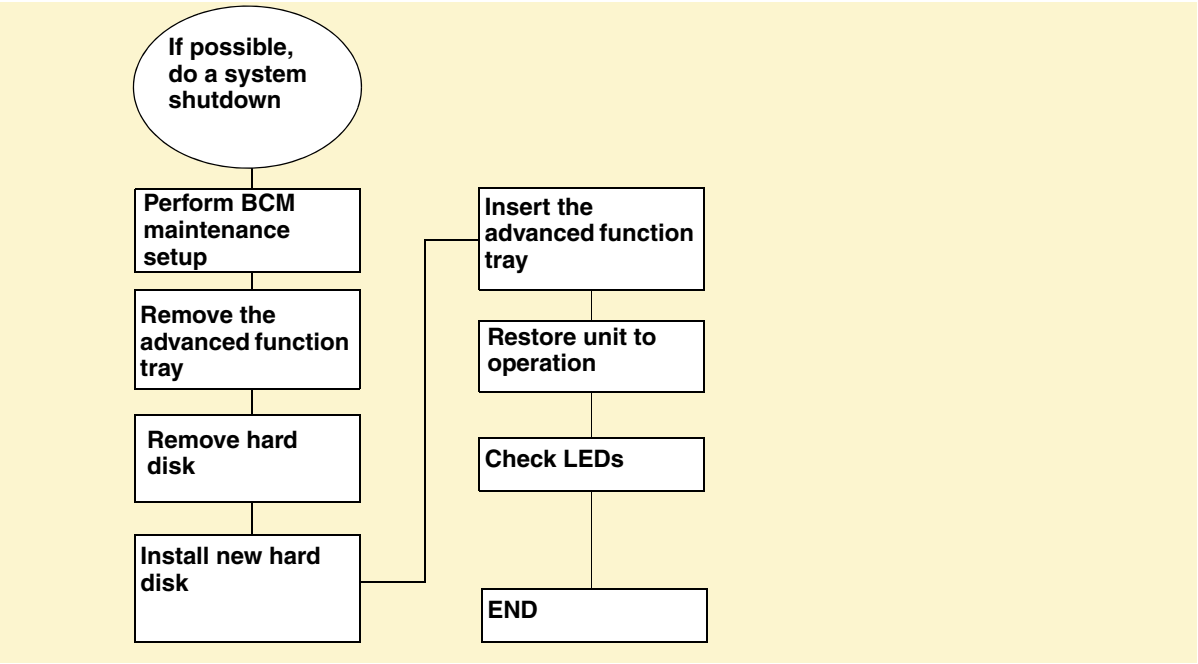

To remove the advanced function tray

Warning: Use care when removing or inserting the advanced function tray. Do not forcefully remove or insert the advanced function tray because you could damage or stretch the cables.

Warning: Protect the hardware components against damage from electrostatic discharge. Always wear a grounded wrist strap before you handle components. Always place the components in a static-free container or work area.

To remove the advanced function tray

1 Shut down the system (see "Performing a system shutdown" on page 233).

2 Disconnect the BCM system from the AC power outlet.

3 Remove the main unit top cover (see "Removing the main unit top cover" on page 246). Return to this step when complete.

4 Attach one end of the grounding strap to your wrist and the other end to a grounded metal surface.

5 Remove the advanced function tray latch screws (see Figure 112). Place the screws in a safe location.

6 Move the advanced function tray latches to the unlocked position.

7 Grasp the advanced function tray latches and partially remove the unit from the main unit. Do not exert force on the hard disk power cables and connectors.

8 Disconnect hard disk power cable connectors.

9 Disconnect the IDE connector.

10 Remove the advanced function tray completely from the main unit.

11 Place the advanced function tray on a flat, clean, and static-free surface. If you need to remove the hard disk component, refer to "Removing a hard disk cage from a BCM400 advanced function tray" on page 261.

Figure 112 Remove the advanced function tray

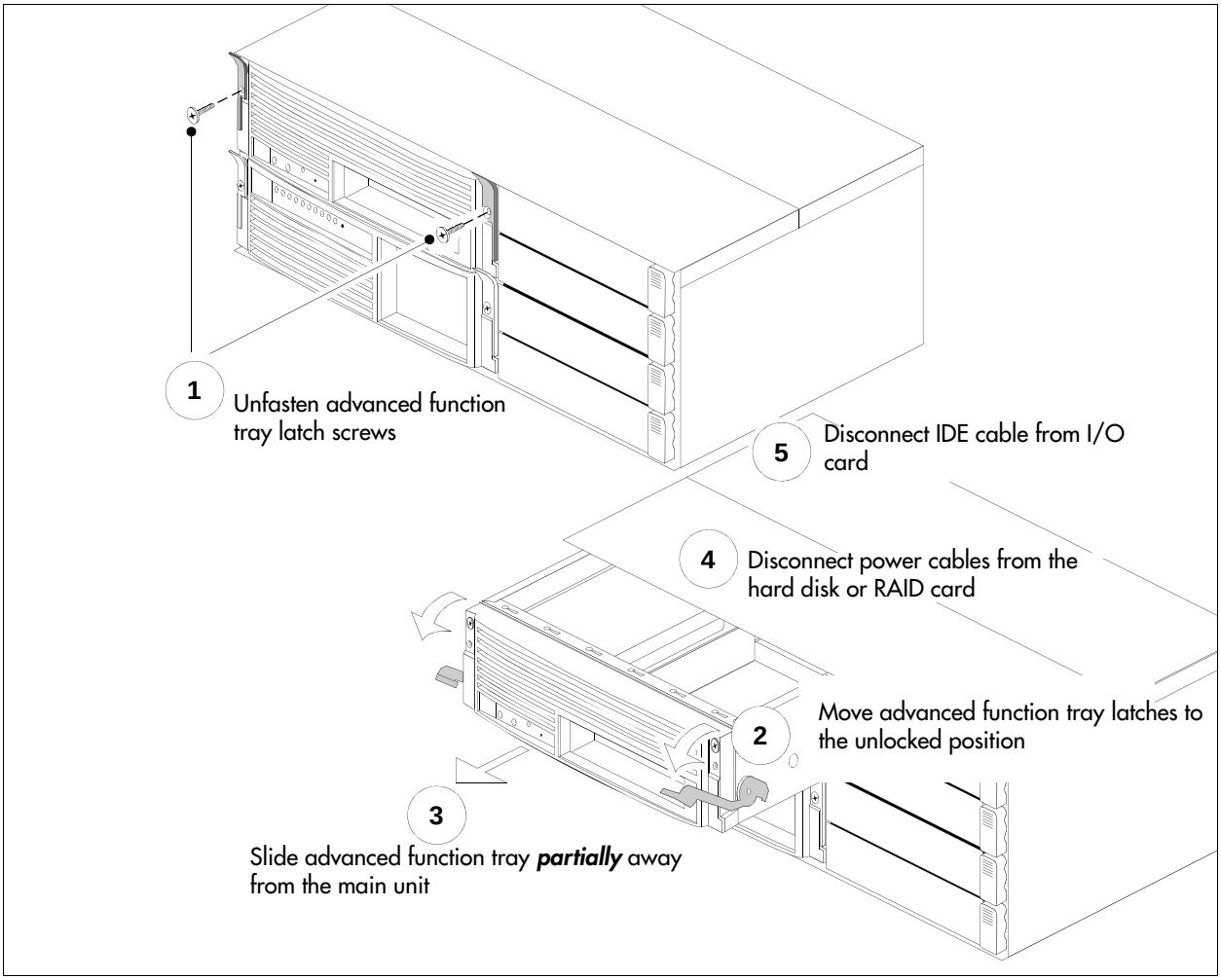

To install the advanced function tray

Warning: Use care when removing or inserting the advanced function tray. Do not forcefully remove or insert the advanced function tray because you could damage or stretch the cables.

Warning: Protect the hardware components against damage from electrostatic discharge. Always wear a grounded wrist strap before you handle components. Always place the components in a static-free container or work area.

1. Disconnect the BCM system from the AC power outlet.
2. Attach one end of the grounding strap to your wrist and the other end to a grounded metal surface.
3. Remove the main unit top cover. See "Removing the main unit top cover" on page 246.
4. Remove the advanced function tray latch screws. Place the screws in a safe location. If the screws are already removed, skip to the next step.
5. Move the advanced function tray latches to the unlocked position.
6. Position the advanced function tray in the correct main unit slot.
7. Partially insert the advanced function tray into the main unit (see Figure 113).
8. Connect the hard disk power cable connectors. Use the first connector. Tuck any excess cable under the hard disk.
9. Connect the IDE connector.
10. Push the advanced function tray completely into the chassis. Be careful not to crimp the cables (see Figure 113).
11. Move the advanced function tray latches to the locked position.
12. Install the advanced function tray latch screws.
13. Install the main unit top cover. Refer to "Installing the main unit top cover" on page 248.
14. Restore the BCM system to operation. See "Restarting the system after maintenance" on page 234.
15. Observe the system status display LEDs to ensure the advanced function tray initializes correctly.

Figure 113 Install the advanced function tray

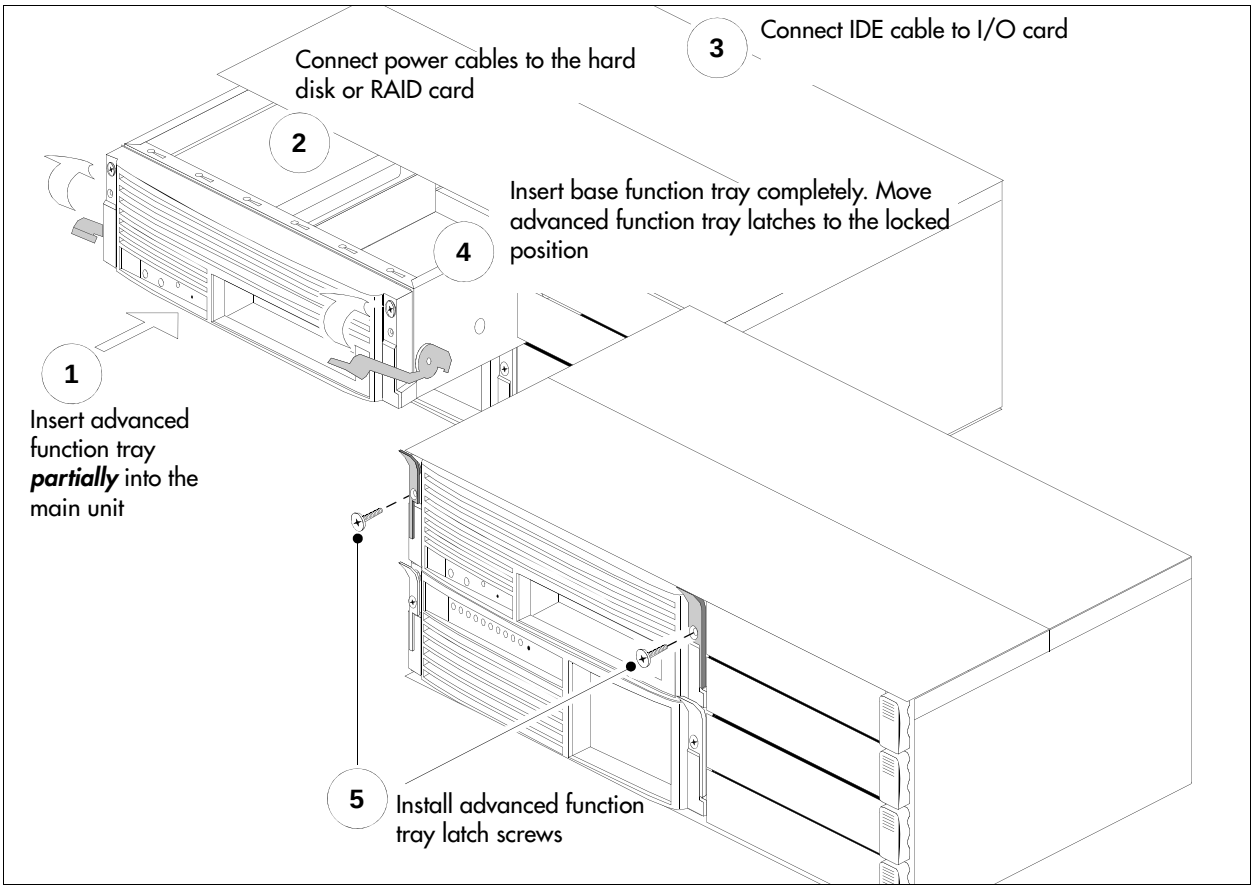

Removing and installing the main unit top cover

Use the procedures in this section to either remove or install the top cover of the main unit. You must remove the top cover to access the cabling or hardware components, such as the standard power supply, I/O card, or backplanes.

Removing the main unit top cover

Use this procedure to remove the top cover of the BCM200 or BCM400 main unit. This procedure assumes that you intend to perform maintenance activities. Do not operate the BCM main unit with the top cover removed. Do not leave the top cover removed for extended periods of time.

Warning: Protect the hardware components against damage from electrostatic discharge. Always wear a grounded wrist strap before you handle components. Always place the components in a static-free container or work area.

To remove the main unit top cover

1 Shut down the system (see "Performing a system shutdown" on page 233).

2 Disconnect the BCM system from the AC power outlet.

3 If required, remove the main unit from the server rack.

4 Attach one end of the grounding strap to your wrist and the other end to a grounded metal surface.

5 Remove the two top cover screws located at the rear of the main unit. Place the screws in a safe location.

6 Lift the back of the cover and slide rearward until it disengages from the main unit. Refer to Figure 114 on page 247 or Figure 115 on page 248.

7 Lift the top cover up and away from the main unit. Place the cover in a safe location.

Figure 114 Remove the BCM200 top cover

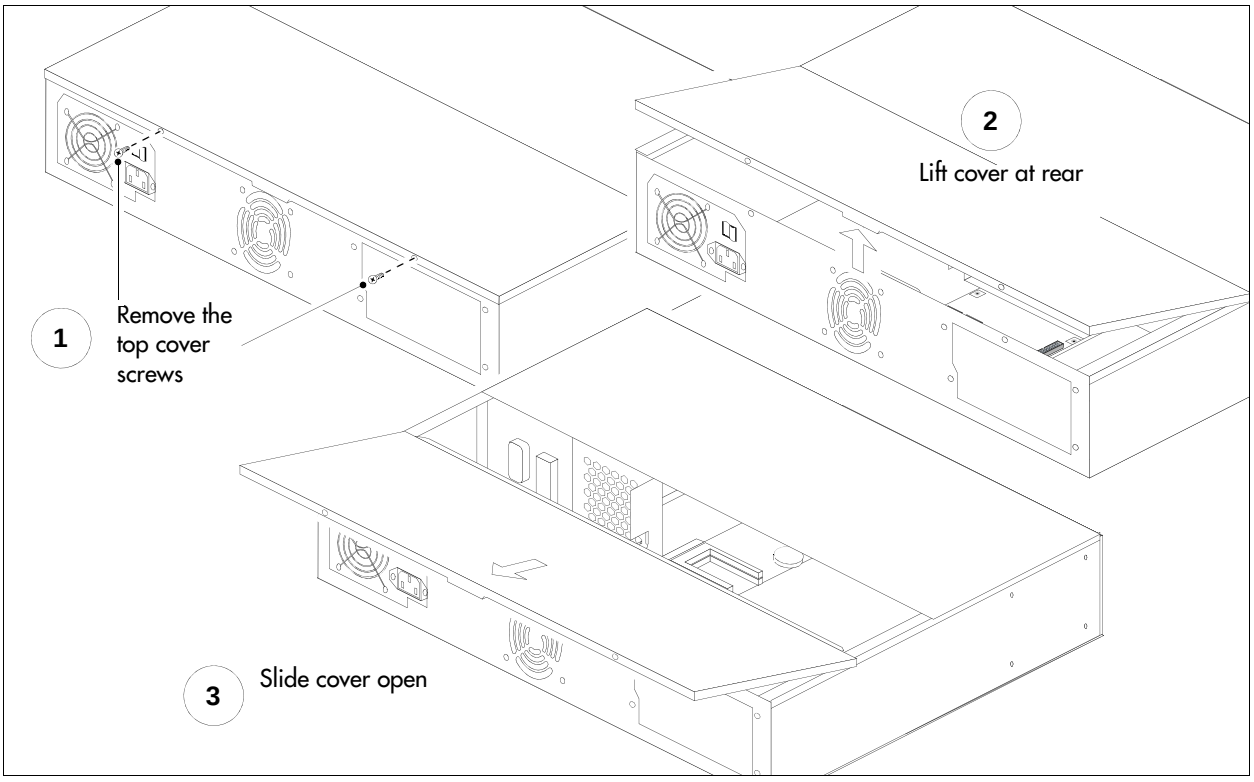

Figure 115 Remove the BCM400 top cover

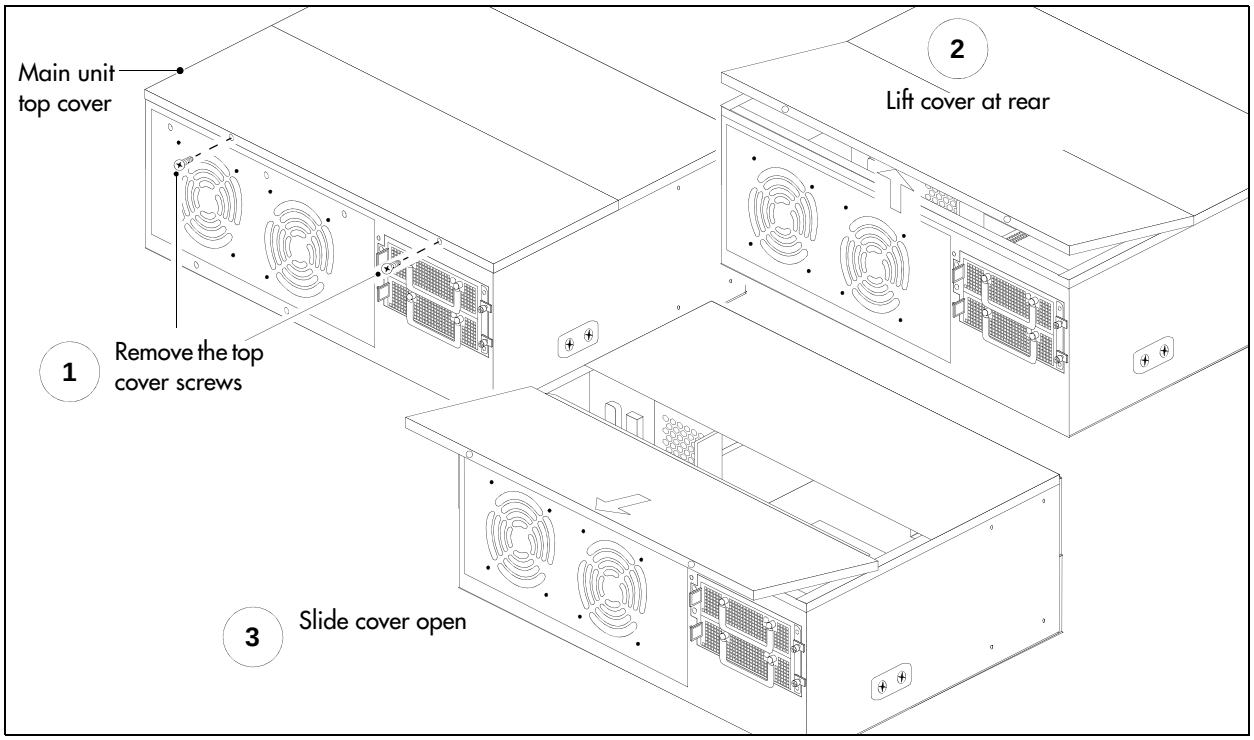

Installing the main unit top cover

Use this procedure to install the top of the main unit cover. This procedure assumes that maintenance or installation activities are complete and that you are ready to start the BCM system.

Warning: Protect the hardware components against damage from electrostatic discharge. Always wear a grounded wrist strap before you handle components. Always place the components in a static-free container or work area.

To install the main unit top cover

1. Disconnect the BCM system from the AC power outlet.
2. If required, remove the main unit from the server rack.
3. Attach one end of the grounding strap to your wrist and the other end to a grounded metal surface.
4. Set the top cover on the main unit.
5. Slide the top cover forward until the cover engages with the main unit.
6. Press the top cover down until it rests on the chassis. Refer to Figure 116 or Figure 117.
7. Install the two top cover screws at the rear of the main unit.

Figure 116 Install the BCM200 top cover

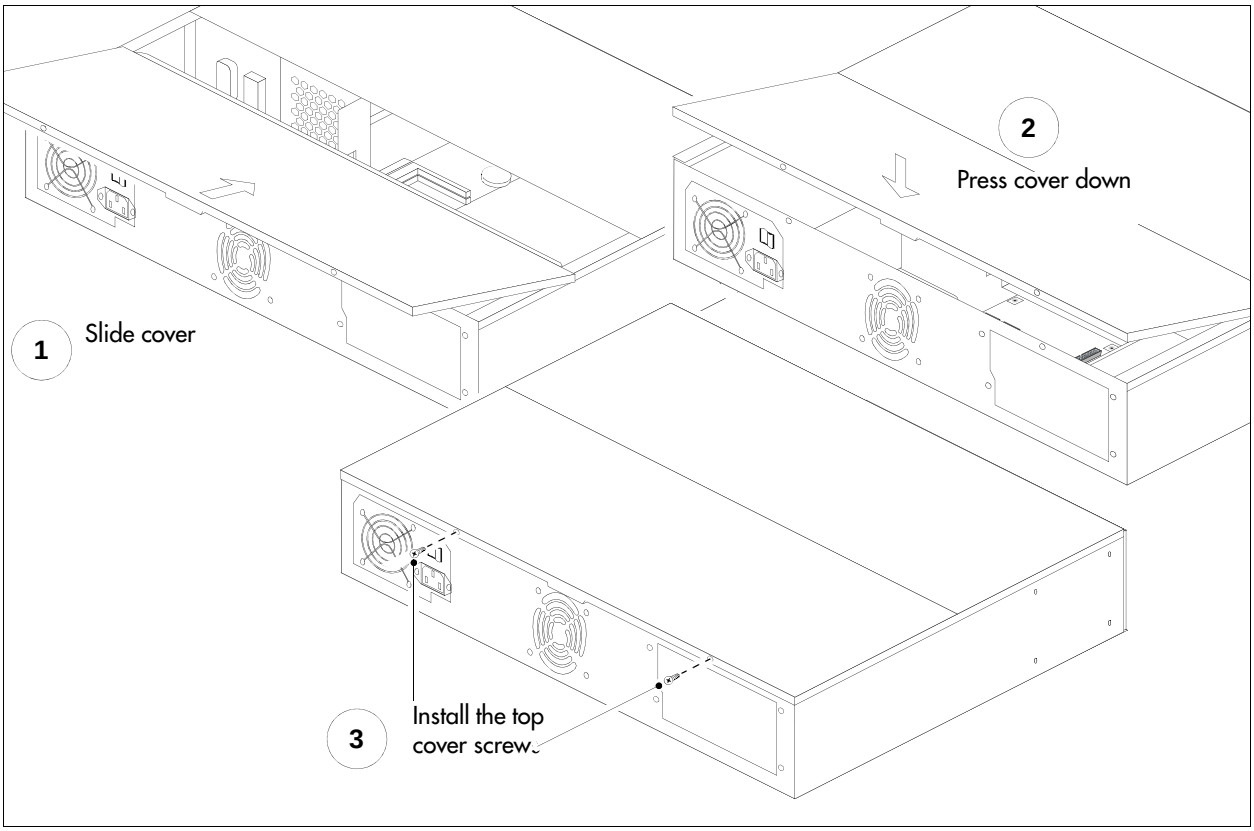

Figure 117 Install the BCM400 top cover

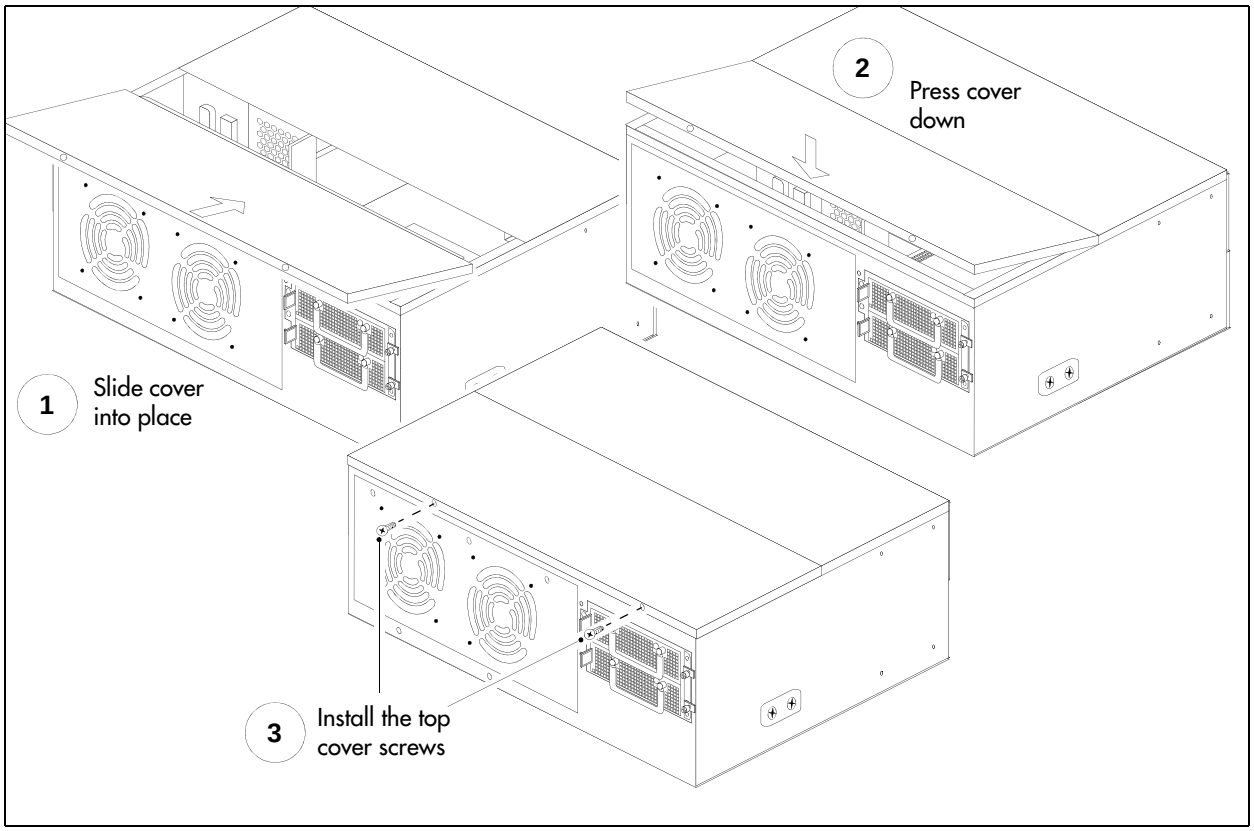

Using the backup and restore utility

The backup and restore utility (BRU) provides a means to preserve the integrity of your BCM system operating system software and configuration data.

Use the BRU if you need to replace the following hardware:

- Hard disk (see "Replacing the hard disk" on page 255)
- Media Services Card (MSC) (see "Replacing data cards and processing hardware" on page 301)

Before you perform any substantial maintenance on the BCM system, save your data to a safe storage module location elsewhere in the network. After hardware maintenance is complete, restore the data to your BCM system. Access the BRU through the Element Manager main page.

For further instructions about how to operate the BRU, refer to the *BCM 4.0 Administration Guide*.

Chapter 21
Replacing a media bay module

This chapter describes the procedure for replacing a media bay module (MBM).

Figure 118 provides an overview of the process for replacing MBMs.

Warning: This section describes replacing an MBM with the same type of MBM. If you want to replace an MBM with a different type of MBM, you must treat it as a new installation. Ensure the new MBM does not overrun any lines already assigned to other MBMs.

Figure 118 Overview of MBM replacement process

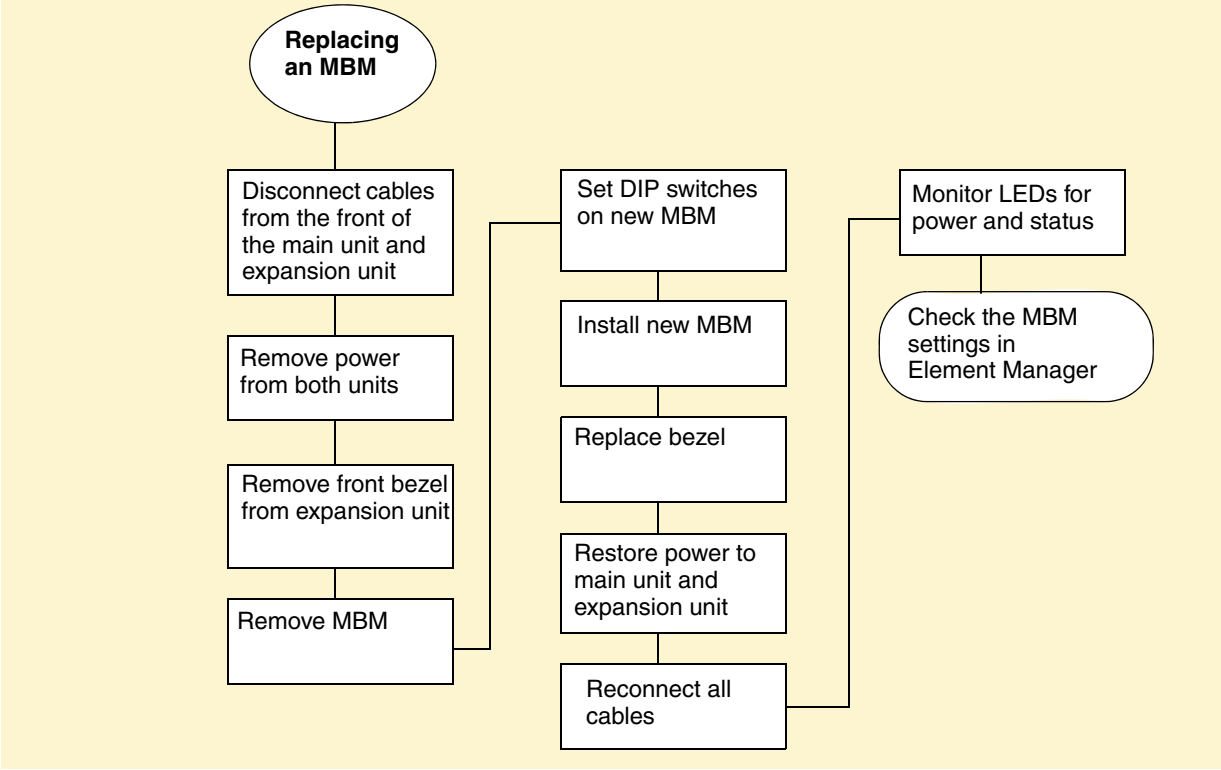

Refer to the following procedures to replace an MBM:

- "Removing an MBM" on page 252
- "Installing an MBM" on page 254
- "Returning the system to operation" on page 254

Removing an MBM

Use the procedures is this section to remove one or more MBMs from a BCM main unit or expansion unit.

To remove an MBM

1. Power down the BCM system (see "Performing a system shutdown" on page 233).
2. Remove any cabling from the MBM faceplate.
3. Grasp the right edge of the MBM ejector lever with your thumb, index and middle fingers. Pull outward to partially eject the MBM. Pull further on the lever to eject the MBM from the bay. Refer to Figure 119, Figure 120, or Figure 121.
4. Grasp the top and bottom edges of the MBM. Remove the MBM from the BCM unit (see Figure 119, Figure 120, and Figure 121). Place the MBM in a clean, safe, and static-free area.

Figure 119 Remove a BCM200 MBM

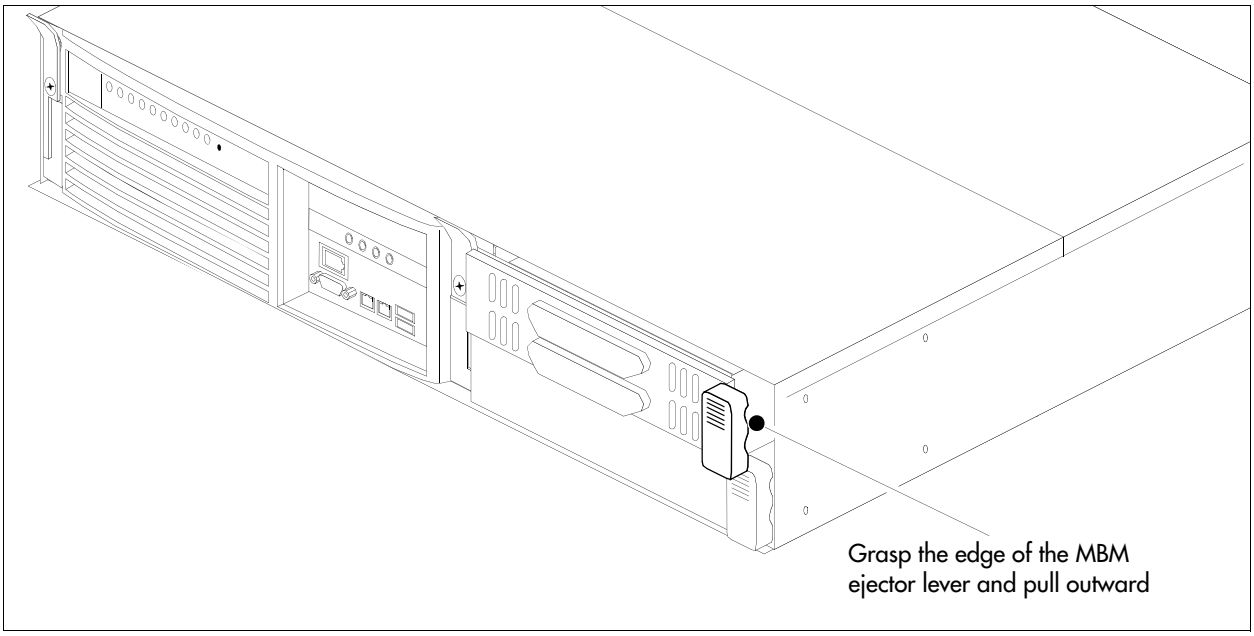

Figure 120 Remove a BCM400 MBM

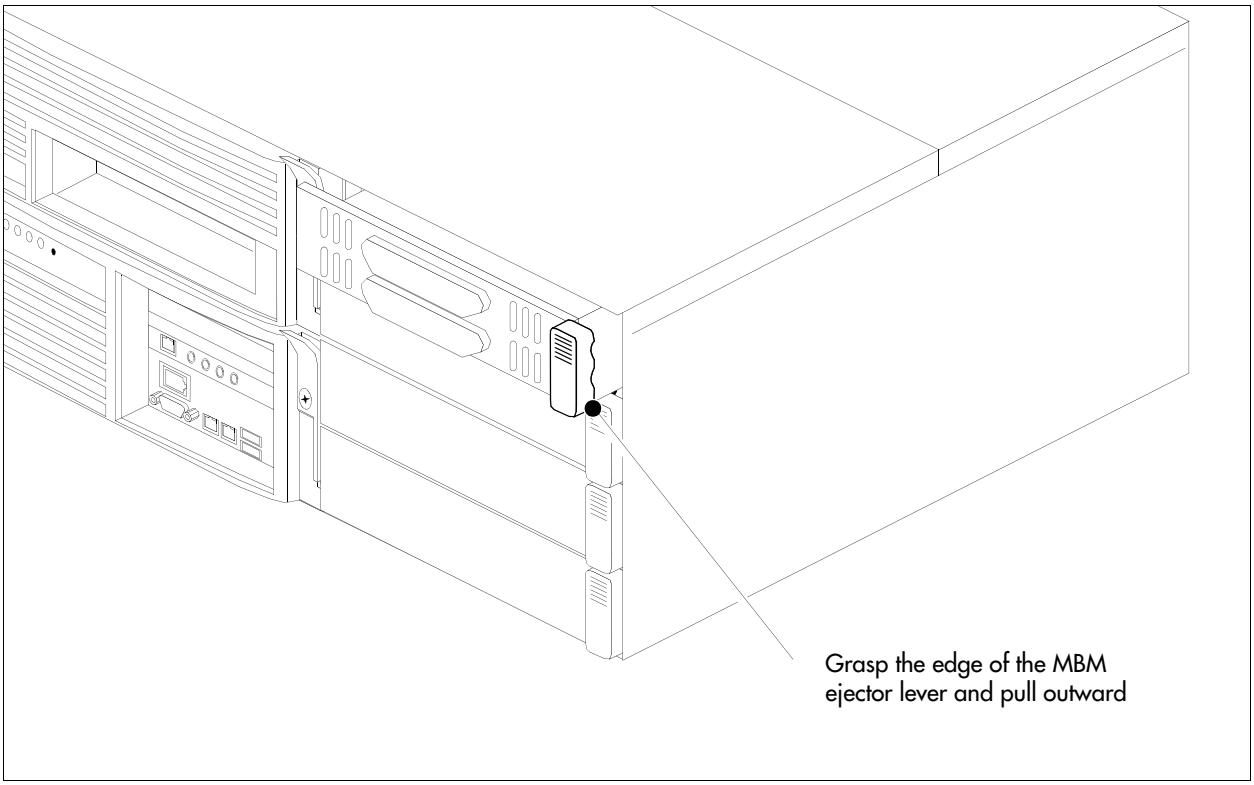

Figure 121 Remove the expansion unit front bezel

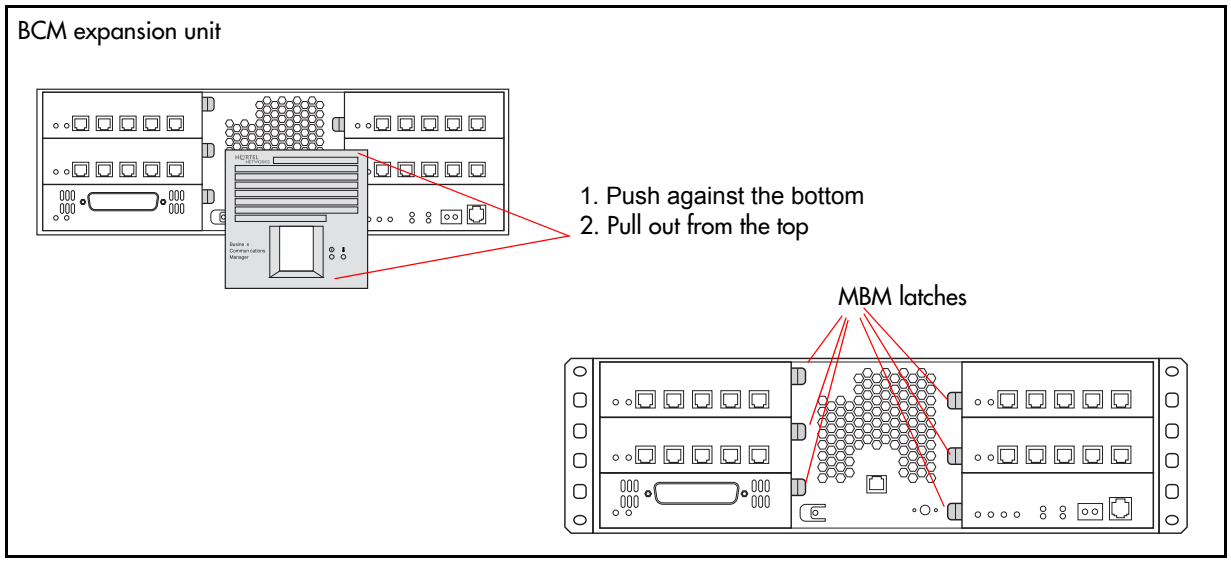

Installing an MBM

After removing the old MBM, follow the steps in this section to install the new MBM.

To install an MBM

1. Set the DIP switches on the new MBM to match the settings of the old MBM.
2. Refer to "Installing an MBM" on page 137 to install the MBM into the media bay.

Returning the system to operation

To return the system to operation, refer to "Restarting the system after maintenance" on page 234.

Chapter 22
Replacing the hard disk

This chapter describes how to replace the hard disks and hard disk cage assembly in the main unit. The replacement procedures describe both the standard and RAID hard disk configurations.

For information on how to monitor and troubleshoot the hard disk in a standard or RAID configuration, refer to "System monitoring and troubleshooting" on page 217.

This chapter contains the following primary topics:

- "Installing a RAID system" on page 256
- "Replacing a RAID configuration hard disk" on page 258
- "Removing a hard disk cage" on page 259
- "Installing a hard disk cage" on page 262
- "Replacing a hard disk in the hard disk cage" on page 266
- "Initializing the hard disk in a single-disk configuration" on page 274

The hard disk is a core software and data storage component. For the BCM200 main unit, the hard disk assembly installs at the rear of the main unit. For the BCM400 main unit, the hard disk assembly installs in the advanced function tray.

Use the procedures described in this chapter under the following conditions:

- if you need to replace an existing hard disk in a standard configuration
- if you need to upgrade to a RAID configuration
- if you need to replace a hard disk in a RAID configuration
- if you need to replace a RAID card

Remember to take suitable precautions when working inside the BCM system. Maintain a clean and static-safe site.

Danger: Electrical shock warning

Disconnect the power cord, telephone cables, and network cables before opening the BCM main unit. Read and follow installation instructions carefully.

Caution: Use only Nortel-approved replacement components. Contact your account representative for the current list of approved replacement parts.

Note: Maintain a current backup of your system

When you replace the hard disk, you need to restore the BCM system programming from the backup using the backup and restore utility (BRU). If you do not have a current backup, you must reenter configuration data. For further information on how to perform a backup or restore, refer to the *BCM 4.0 Administration Guide*.

Caution: Do not use an electric or magnetized screwdriver near the hard disk. You can lose the information stored on the disk. Shock can damage the hard disk. Do not drop or hit the hard disk drive.

Warning: You must remove all of the connections to the BCM main unit base function tray before you power the system down. Failure to disconnect lines before power down can cause damage to the system.

Warning: Protect the hardware components against damage from electrostatic discharge. Always wear a grounded wriststrap before you handle components. Always place the components in a static-free container.

Figure 122 provides an overview of the hard disk replacement process.

Figure 122 Hard disk replacement overview

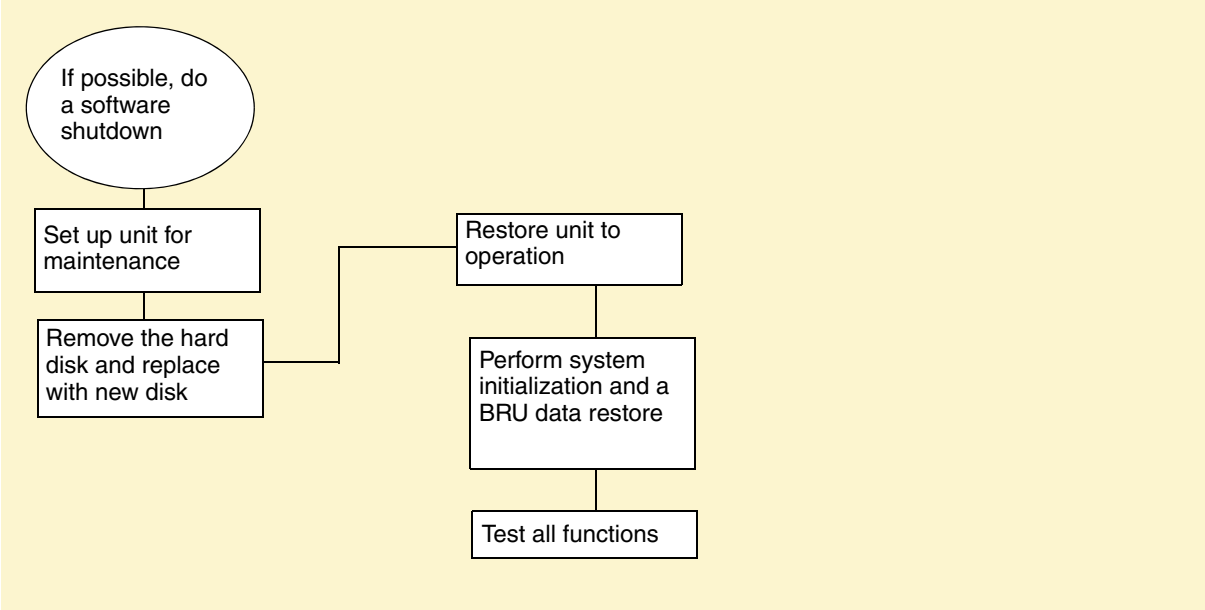

Installing a RAID system

Use this procedure to upgrade an existing standard BCM200 or BCM400 single disk configuration to a RAID configuration.

To install a RAID system

1 Obtain the correct RAID field redundancy or upgrade components.

2 Shut down the system (see "Performing a system shutdown" on page 233).

3 Disconnect the BCM system from the AC power source.

4 Attach one end of the grounding strap to your wrist and the other end to a grounded metal surface on the BCM main unit.

5 If applicable, remove the standard configuration hard disk cage from the BCM200 main unit or BCM400 advanced function tray. Refer to "Removing a hard disk cage" on page 259.

6 Remove the original programmed hard disk from the standard hard disk cage. Install and use the original programmed hard disk as the primary disk in the RAID configuration (see Figure 131). For further information on how to replace the hard disks, refer to "Installing a hard disk into a standard configuration hard disk cage" on page 269.

Caution: Use only Nortel-approved replacement components. Contact your account representative for the current list of approved replacement parts.

7 Install the RAID hard disk cage in your system. For further information, refer to "Installing a hard disk cage in a BCM200 main unit" on page 263 or "Installing a hard disk cage in a BCM400 main unit" on page 264.

8 Install the main unit cover and access panel (if required).

9 Restore the BCM system to operation (see "Restarting the system after maintenance" on page 234).

After bootup, the system automatically detects the presence of a RAID configuration and begins the disk initialization and mirroring process. For further information on how to monitor the disk mirror process, refer to "RAID disk mirroring" on page 223.

Note: RAID disk mirroring can take up to 3 hours to complete. The BCM system continues to operate normally during the disk mirroring process. However, because disk mirroring occupies computing resources, Nortel recommends that you perform disk mirroring during a period of low call traffic.

Nortel recommends that you perform any system reboot only as required and at the beginning of the disk mirroring process.

Note: If this is the first time installation of the RAID upgrade, both Primary and Mirror status LEDs are green.

Replacing a RAID configuration hard disk

Use this procedure to replace a faulty disk in an existing RAID configuration.

To replace a RAID configuration hard disk

1. If you still have access to Element Manager, monitor the RAID hard disk activity status. Diagnose hard disk fault conditions and perform maintenance activities if required. For further information, refer to "RAID disk mirroring" on page 223.
2. Determine if any of the RAID hard disks require replacement. If you determine a RAID disk is faulty, continue to step 3. If you determine no fault exists in the hard disks, you do not need to replace a hard disk.
3. Shut down the system (see "Performing a system shutdown" on page 233).
4. Disconnect the BCM system from the AC power source.
5. Attach one end of the grounding strap to your wrist and the other end to a grounded metal surface on the BCM main unit.
6. Remove the RAID hard disk cage from the main unit or advanced function tray. Refer to "Removing a hard disk cage" on page 259.
7. Remove the faulty hard disk (primary or mirror). Refer to "Removing a primary hard disk from a RAID hard disk cage" on page 267 or "Removing a mirror hard disk from a RAID hard disk cage" on page 268.
8. Install a new hard disk to replace the faulty hard disk. For further information, refer to "Replacing a hard disk in the hard disk cage" on page 266. Ensure the hard disk cables connect to the correct hard disk (see caution).

Caution: Use only Nortel-approved replacement components. Contact your account representative for the current list of approved replacement parts.

Caution: It is vital that you connect the correct IDE ribbon cables to the correct hard disks. Connect the primary IDE ribbon cable to the primary hard disk. Connect the mirror IDE ribbon cable to the mirror hard disk.

9. Install the RAID hard disk cage in your system. For further information, refer to "Installing a hard disk cage in a BCM200 main unit" on page 263 or "Installing a hard disk cage in a BCM400 main unit" on page 264.
10. Restore the BCM system to operation (see "Restarting the system after maintenance" on page 234).

    After bootup, the system automatically detects the presence of a RAID configuration and begins the disk initialization and mirroring process.

Note: RAID disk mirroring takes up to 3 hours to complete. The BCM system continues to operate normally during the disk mirroring process. However, because disk mirroring occupies computing resources, Nortel recommends that you perform disk mirroring during a period of low call traffic.

Note: If this is the first time installation of the RAID configuration, both primary and mirror status LEDs are green.

Removing a hard disk cage

Use the procedures in this section to remove a hard disk cage from either the BCM200 or BCM400 system. When a hard disk causes problems or fails, remove the hard disk cage from the BCM200 main unit or the BCM400 main unit. Remove the hard disk cage for RAID upgrades, or for hard disk or RAID card replacement conditions.

For information on how to determine if you have a faulty hard disk, refer to "Monitoring standard configuration hard disk status using Element Manager" on page 220 or "RAID disk mirroring" on page 223.

This section provides the following procedures for removing a hard disk cage from the BCM200 and BCM400 main unit.

- "Removing a hard disk cage from a BCM200 main unit" on page 259
- "Removing a hard disk cage from a BCM400 advanced function tray" on page 261

Warning: Maintain a current backup of your system configuration on a separate backup network server. Restore the current backup configuration data to a replacement hard disk. For further information on how to perform a backup and restore, refer to the *BCM 4.0 Administration Guide*.

Removing a hard disk cage from a BCM200 main unit

Use this procedure to remove a standard or RAID configuration hard disk cage from the BCM200 main unit (see also "Replacing a hard disk in the hard disk cage" on page 266).

Warning: Protect the hardware components against damage from electrostatic discharge. Always wear a grounded wriststrap before you handle components. Always place the components in a static-free container.

To remove a hard disk cage from a BCM200 main unit

1. Shut down the system (see "Performing a system shutdown" on page 233).
2. Disconnect the BCM system from the AC power source.
3. Attach one end of the grounding strap to your wrist and the other end to a grounded metal surface on the BCM main unit.
4. Access the hard disk from a panel at the rear of the BCM200 main unit. Remove the hard disk access panel screws (see Figure 123 on page 260). Place the panel and screws in a safe location.
5. If accessible, remove the BCM200 main unit top cover (see "Removing the main unit top cover" on page 246).
6. Place your fingers under the tab located at the bottom rear of the hard disk cage. Lift firmly on the tab. At the same time, slide the hard disk cage in the direction shown in Figure 123 until the unit detaches from the mounting points on the chassis.
7. Slide the hard disk cage through the access panel and out of the main unit. Do not place strain the hard disk IDE or power cables.
8. Disconnect the hard disk from the system:
   a. Disconnect the power supply connector from the hard disk.
   b. Disconnect the IDE connector from the hard disk (or RAID card).

Figure 123 Detach the hard disk cage from the BCM200 main unit

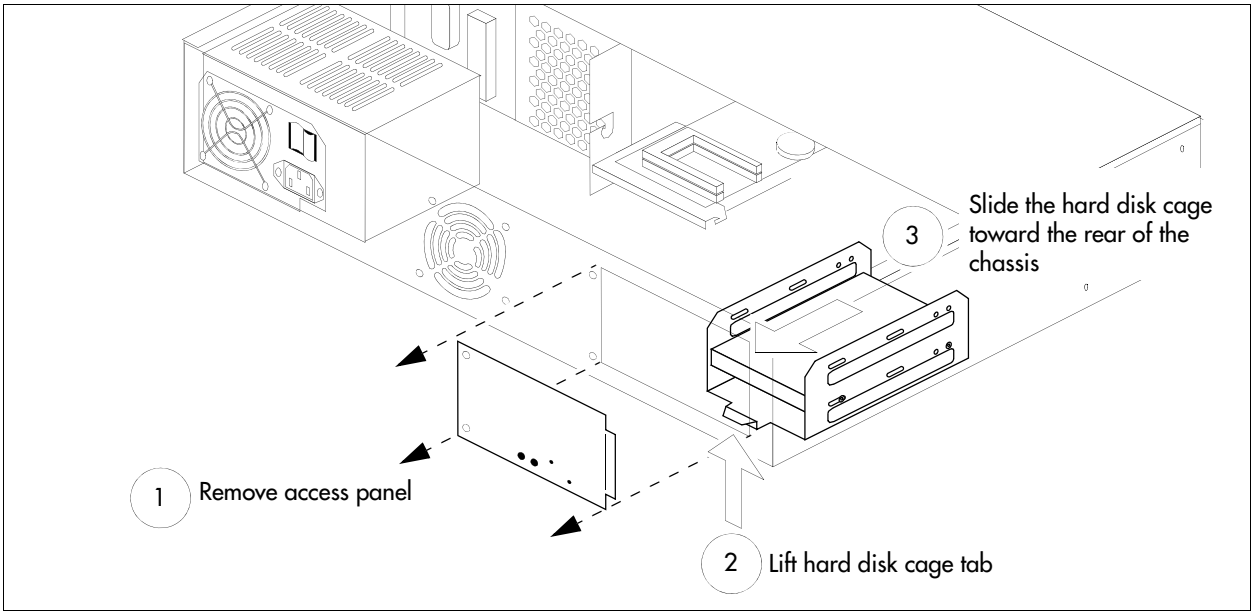

9. Remove the hard disk cage completely from the BCM200 main unit. Place the hard disk cage on a flat, clean and static-free surface.

Removing a hard disk cage from a BCM400 advanced function tray

Use this procedure to remove the BCM400 standard or RAID configuration hard disk cage from the BCM400 advanced function tray. See also "Replacing a hard disk in the hard disk cage" on page 266.

Warning: Protect the hardware components against damage from electrostatic discharge. Always wear a grounded wriststrap before you handle components. Always place the components in a static-free container.

To remove a hard disk cage from a BCM400 main unit

1. Shut down the system (see "Performing a system shutdown" on page 233).
2. Disconnect the BCM system from the AC power source.
3. Attach one end of the grounding strap to your wrist and the other end to a grounded metal surface on the BCM400 main unit.
4. Partially remove the BCM400 advanced function tray (see "To remove the advanced function tray" on page 243). Do not to pinch or stretch any cables when sliding the advanced function tray partially out of the main unit.
5. Locate the hard disk or RAID cage in the advanced function tray.
6. Disconnect the hard disk cables from the system:
   a. Disconnect the power supply connector from the hard disk.
   b. Disconnect the IDE connector from the hard disk (or RAID card).
7. Carefully remove the advanced function tray completely from the main unit. Do not pinch or stretch any cables when sliding the advanced function tray away from the main unit.
8. Remove the transportation hard disk cage restraint screw and keep it in a safe place.
9. Place the advanced function tray on a flat, static-free surface.
10. Place your fingers under the tab located at the bottom rear of the hard disk cage. Firmly lift the tab. At the same time, slide the hard disk cage in the direction shown in Figure 124 until the unit detaches from the mounting points on the advanced function tray.

Figure 124 Detach the hard disk cage from the BCM400 advanced function tray chassis

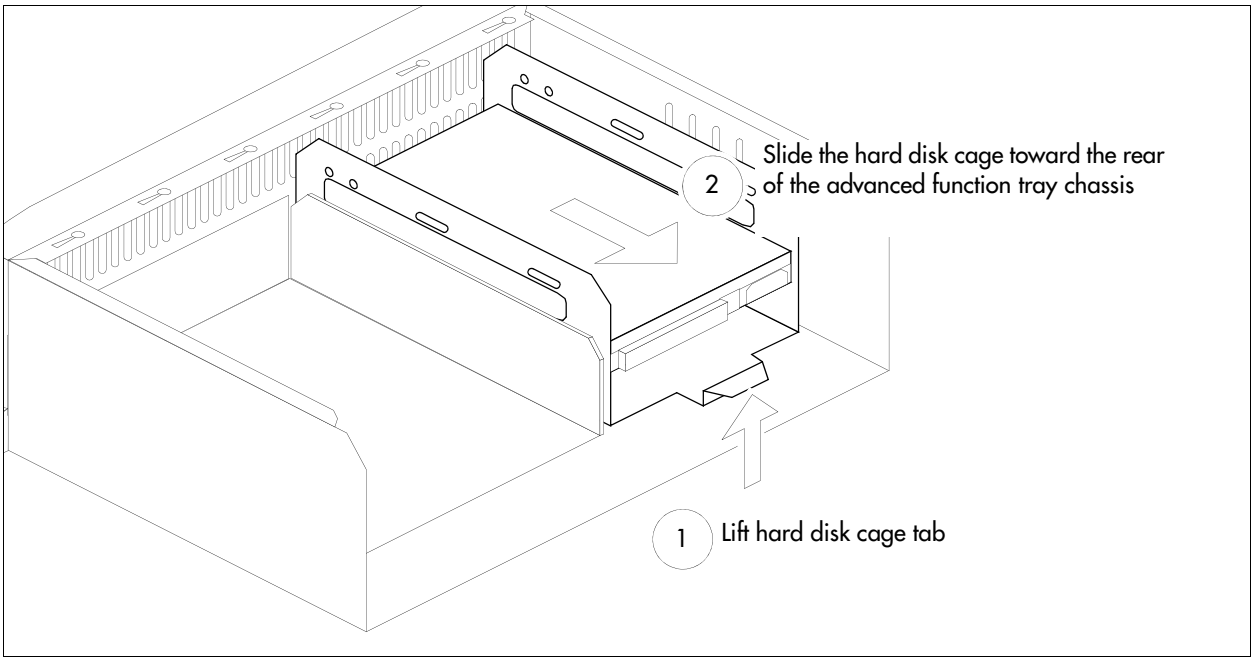

11 Remove the hard disk cage from the BCM400 advanced function tray chassis. Place the hard disk cage on a flat, clean and static-free surface.

Installing a hard disk cage

Use the procedures in this section to install a standard or RAID configuration hard disk cage into a BCM200 or BCM400 system. Install the hard disk cage in the BCM after RAID upgrade, or in a hard disk or RAID card replacement conditions.

This section describes the following procedures:

- "Installing a hard disk cage in a BCM200 main unit" on page 263
- "Installing a hard disk cage in a BCM400 main unit" on page 264

Warning: You must initialize the BCM system when you install a new hard disk on a single-disk system (see "Initializing the hard disk in a single-disk configuration" on page 274).

Installing a hard disk cage in a BCM200 main unit

Use this procedure to install the standard or RAID configuration hard disk cage into the BCM200 main unit.

Warning: Protect the hardware components against damage from electrostatic discharge. Always wear a grounded wriststrap before you handle components. Always place the components in a static-free container.

To install a hard disk cage

1. Disconnect the BCM system from the AC power outlet.
2. Attach one end of the grounding strap to your wrist and the other end to a grounded metal surface on the BCM main unit.
3. If accessible, remove the main unit top cover (see "Removing the main unit top cover" on page 246).
4. You can access the hard disk location from a panel at the rear of the main unit. Remove the four hard disk access panel screws (see Figure 123). Place the panel and screws in a safe location.
5. Install the hard disk cage in the BCM200 main unit.
   a. Insert the hard disk cage through the hard disk access panel in the back of the BCM200.
   b. Position the hard disk cage in front of the cage chassis mounting points. The hard disk cage lift tab is at the rear of the hard disk cage.
   c. Slide the hard disk cage in the direction shown in Figure 125 until the unit attaches to the chassis. You will hear a snap as the hard disk cage locking tab slips into position.
6. Reconnect power and IDE cables to the hard disk and connect the hard disk to the system:
   a. Connect the IDE ribbon cable connector to the hard disk (or RAID card) IDE interface.
   b. Connect the power supply to the hard disk.

Caution: It is vital that you connect the correct IDE ribbon cables to the correct hard disks. Connect the primary IDE ribbon cable to the primary hard disk. Connect the mirror IDE ribbon cable to the mirror hard disk.

Note: All connectors have a notch that allows you to align the connectors correctly. If you cannot push a connector in easily, do not force it. Examine the connector before attempting to install the cable to determine the correct orientation.

Figure 125 Insert the hard disk cage into the BCM200 main unit

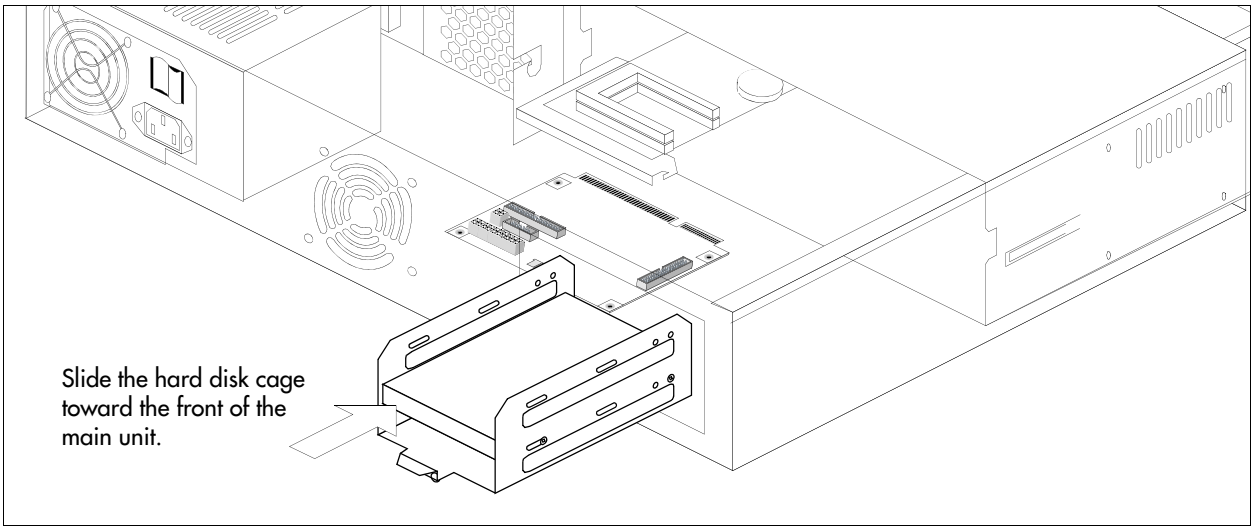

7 Replace the cover (if applicable) and access panel.

8 Restore the BCM system to operation. Refer to "Restarting the system after maintenance" on page 234.

9 If you installed a new programmed hard disk in a standard configuration (for RAID configuration, skip to the next step):

   a Initialize the hard disk. Refer to "Initializing the hard disk in a single-disk configuration" on page 274.

   b After the disk is initialized, restore your data from your backups. If you did not back up your keycodes, reenter them (see "Software keycode" on page 184).

10 If you installed a new blank hard disk (mirror or primary) in a RAID, wait for the disk mirror process to complete. For further information on how to monitor disk mirroring progress, refer to "RAID disk mirroring" on page 223.

Installing a hard disk cage in a BCM400 main unit

Use this procedure to install the standard or RAID configuration hard disk cage into the BCM400 advanced function tray.

Warning: Protect the hardware components against damage from electrostatic discharge. Always wear a grounded wriststrap before you handle components. Always place the components in a static-free container.

To install a hard disk cage

1 Disconnect the BCM system from the AC power source.

2 Attach one end of the grounding strap to your wrist and the other end to a grounded metal surface.

3 Install the hard disk in the hard disk cage (see "Installing a hard disk into a standard configuration hard disk cage" on page 269 or "Installing a primary hard disk into a RAID hard disk cage" on page 270 or "Installing a mirror hard disk into a RAID hard disk cage" on page 272).

4 Position the hard disk cage in front of the cage chassis mounting points in the advanced function tray. The hard disk cage lift tab is at the rear of the hard disk cage. If you are installing a RAID, the LEDs point to the front of the advanced function tray.

5 Slide the hard disk cage in the direction shown in Figure 126 until the unit engages with the chassis mounting points in the advanced function tray.

Figure 126 Insert the hard disk cage into the BCM400 advanced function tray

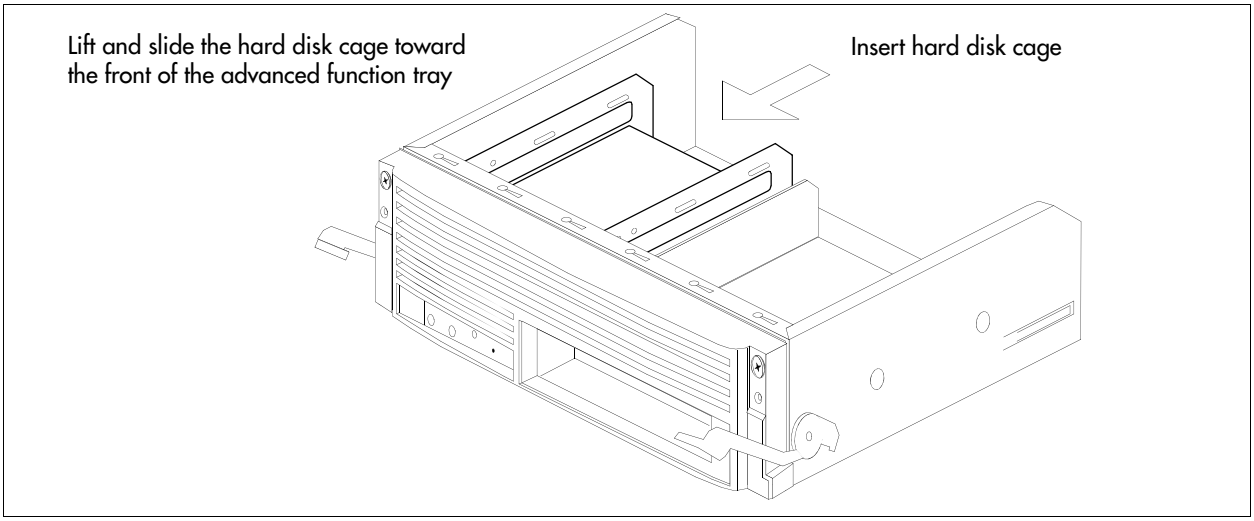

6 Partially insert the advanced function tray into the BCM400 main unit. Ensure you do not pinch any cables against the chassis or internal components.

7 Connect the hard disk (or RAID) to the system:

a Connect the hard disk (or RAID card) to the IDE ribbon cable.

b Connect the power supply to the hard disk.

Caution: It is vital that you connect the correct IDE ribbon cables to the correct hard disks. Connect the primary IDE ribbon cable to the primary hard disk. Connect the mirror IDE ribbon cable to the mirror hard disk.

Note: All connectors have a notch that allows you to align the connectors correctly. If you cannot push a connector in easily, do not force it. Examine the connector before attempting to install the cable to determine the correct orientation.

8 Slide the advanced function tray completely into the BCM400 main unit (see "To install the advanced function tray" on page 245).

9 Restore the BCM system to operation. Refer to "Restarting the system after maintenance" on page 234.

10 If you installed a new programmed hard disk in a standard configuration (for RAID configuration, skip to the next step):

   a Initialize the hard disk. Refer to "Initializing the hard disk in a single-disk configuration" on page 274.

   b After the disk is initialized, restore your data from your backups. If you did not back up your keycodes, reenter them (see "Software keycode" on page 184).

11 If you installed a new blank hard disk (mirror or primary) in a RAID, wait for the disk mirror process to complete. For further information on how to monitor disk mirroring progress, refer to "RAID disk mirroring" on page 223.

Replacing a hard disk in the hard disk cage

Use the procedures in this section to remove or install the hard disk in the hard disk cage for the standard and RAID upgrade BCM200 and BCM400 configurations.

Warning: Protect the hardware components against damage from electrostatic discharge. Always wear a grounded wriststrap before you handle components. Always place the components in a static-free container.

Refer to the following detailed information:

- "Removing a hard disk from a standard configuration hard disk cage" on page 266
- "Removing a primary hard disk from a RAID hard disk cage" on page 267
- "Removing a mirror hard disk from a RAID hard disk cage" on page 268
- "Installing a hard disk into a standard configuration hard disk cage" on page 269
- "Installing a primary hard disk into a RAID hard disk cage" on page 270
- "Installing a mirror hard disk into a RAID hard disk cage" on page 272

Removing a hard disk from a standard configuration hard disk cage

Use this procedure to remove the hard disk from the hard disk cage for the standard BCM200 and BCM400 system. Use this procedure only to replace a faulty hard disk.

Warning: Protect the hardware components against damage from electrostatic discharge. Always wear a grounded wriststrap before you handle components. Always place the components in a static-free container.

To remove a hard disk from a standard configuration hard disk cage

1. Remove the standard hard disk cage from the main unit (see "Removing a hard disk cage" on page 259).
2. Unscrew the hard disk retainer screws from both sides of the standard hard disk cage (see Figure 127). Place the retainer screws in a safe location.
3. Remove the hard disk from the standard hard disk cage (see Figure 127).
4. Place the hard disk on a flat, clean and static-free surface.

Figure 127 Remove the hard disk from the standard hard disk cage

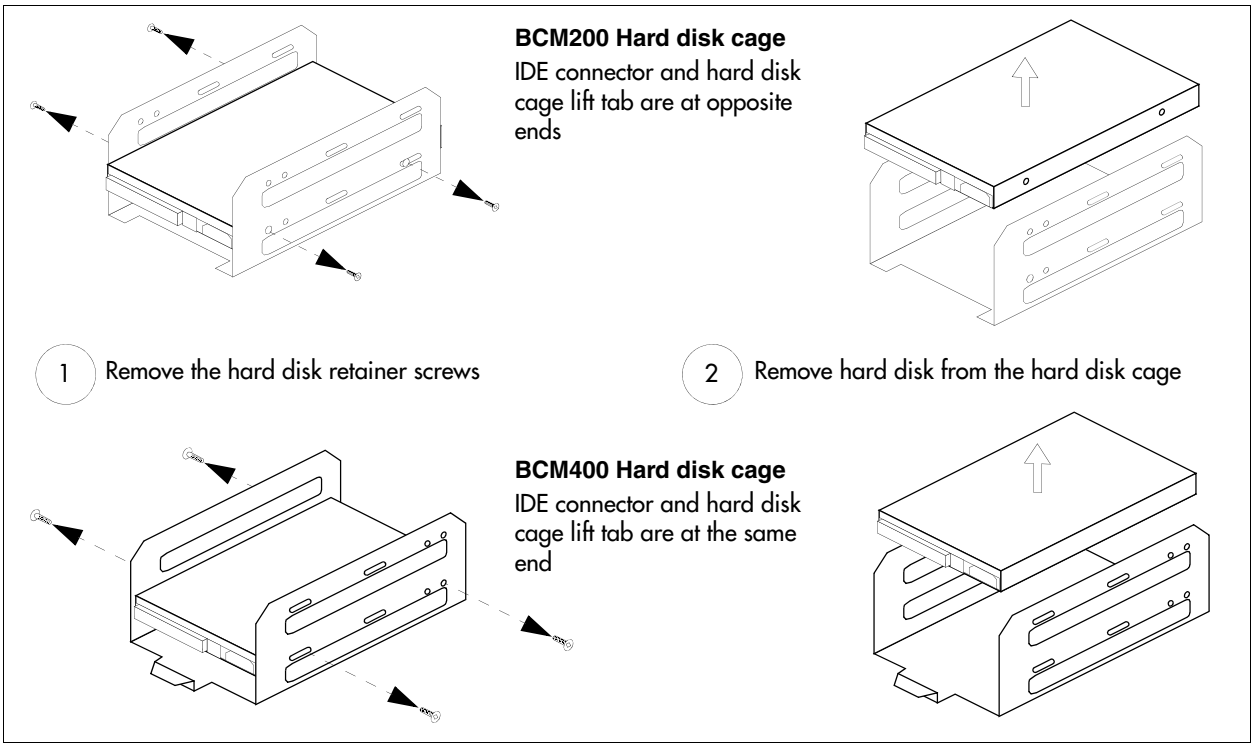

Removing a primary hard disk from a RAID hard disk cage

Use this procedure to remove the primary hard disk from the RAID hard disk cage for the BCM200 and BCM400 system. Use this procedure if you need to replace a faulty hard disk. If a primary hard disk fails, the mirror hard disk assumes control and service remains uninterrupted.

Nortel recommends that you replace the failed primary hard disk to retain full redundancy. Replace the failed primary hard disk during a period of low call traffic.

Warning: Protect the hardware components against damage from electrostatic discharge. Always wear a grounded wriststrap before you handle components. Always place the components in a static-free container.

To remove a primary hard disk from a RAID hard disk cage

1 Remove the RAID hard disk cage from the main unit (see "Removing a hard disk cage" on page 259).

2 Disconnect the hard disk IDE connector from the primary hard disk.

3 Unscrew the hard disk retainer screws from both sides of the RAID hard disk cage (see Figure 128). Place the retainer screws in a safe location.

4 Remove the primary hard disk from the RAID hard disk cage (see Figure 128).

Figure 128 Remove the primary hard disk from the RAID hard disk cage

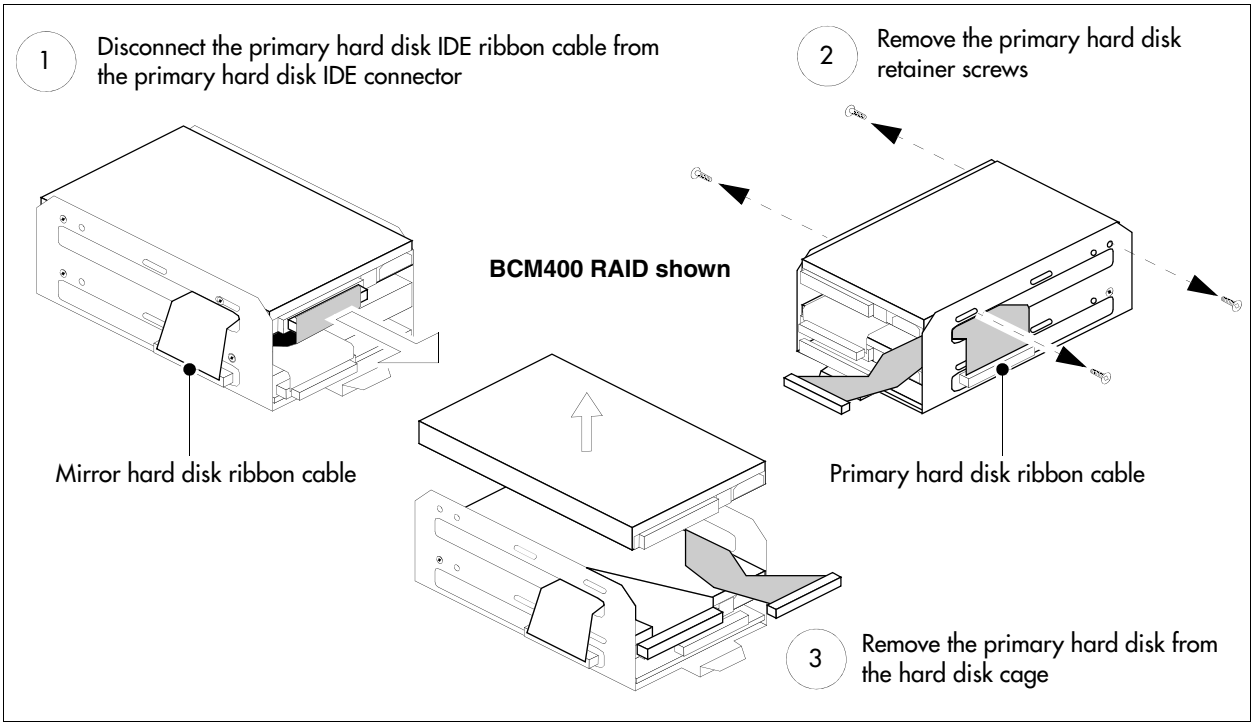

5 Place the primary hard disk on a flat, clean, and static-free surface.

Removing a mirror hard disk from a RAID hard disk cage

Use this procedure to remove the mirror hard disk from the RAID hard disk cage for the BCM200 and BCM400 system. Use this procedure if you need to replace a faulty mirror hard disk.

Nortel recommends that you replace the failed mirror hard disk to retain full redundancy. Replace the failed mirror hard disk during a period of low call traffic. If you choose to remove both the primary and mirror hard disks from the hard disk cage, place an identifying mark on the primary hard disk to ensure correct installation.

Warning: Protect the hardware components against damage from electrostatic discharge. Always wear a grounded wriststrap before you handle components. Always place the components in a static-free container.

To remove a mirror hard disk from a RAID hard disk cage

1 Remove the RAID hard disk cage from the main unit (or advanced function tray) (see "Removing a hard disk cage" on page 259).

2 Disconnect the hard disk IDE connectors from the mirror hard disk and RAID card.

3 Unscrew the hard disk retainer screws from both sides of the RAID hard disk cage (see Figure 129). Lift the mirror hard disk IDE ribbon cable to access the retainer screw. Place the retainer screws in a safe location.

4 Remove the mirror hard disk from the RAID hard disk cage (see Figure 129).

Figure 129 Remove the mirror hard disk from the RAID hard disk cage

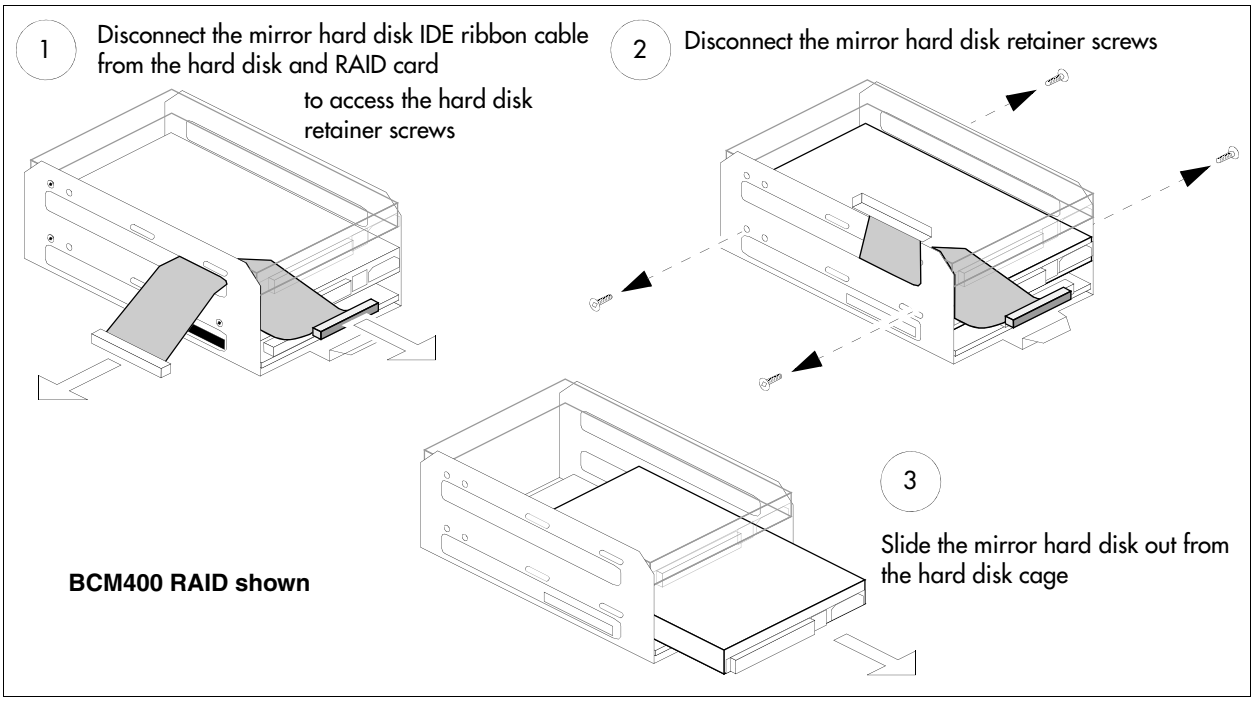

5 Place the hard disk on a flat, clean, and static-free surface.

Installing a hard disk into a standard configuration hard disk cage

Use this procedure to install a single hard disk into a hard disk cage for a standard BCM200 or BCM400 system.

Caution: Use only Nortel-approved replacement components. Contact your account representative for the current list of approved replacement parts.

Caution: It is vital that you connect the correct IDE ribbon cables to the correct hard disks. Connect the primary IDE ribbon cable to the primary hard disk. Connect the mirror IDE ribbon cable to the mirror hard disk.

Warning: Protect the hardware components against damage from electrostatic discharge. Always wear a grounded wriststrap before you handle components. Always place the components in a static-free container.

To install a hard disk into a standard configuration hard disk cage

1 Position the hard disk into the bottom position of the hard disk cage.

Note: For a BCM200 system, orient the hard disk so that the power and IDE connectors are on the bottom and opposite to the hard disk cage lift tab (see Figure 130).

For a BCM400 system, orient the hard disk so that the power and IDE connectors are on the bottom and on the same side as the hard disk cage lift tab.

2 Align the hard disk and hard disk cage retaining screw holes. Fasten the hard disk cage retainer screws into both sides of the hard disk cage (see Figure 130).

Figure 130 Install a single hard disk in the standard configuration hard disk cage

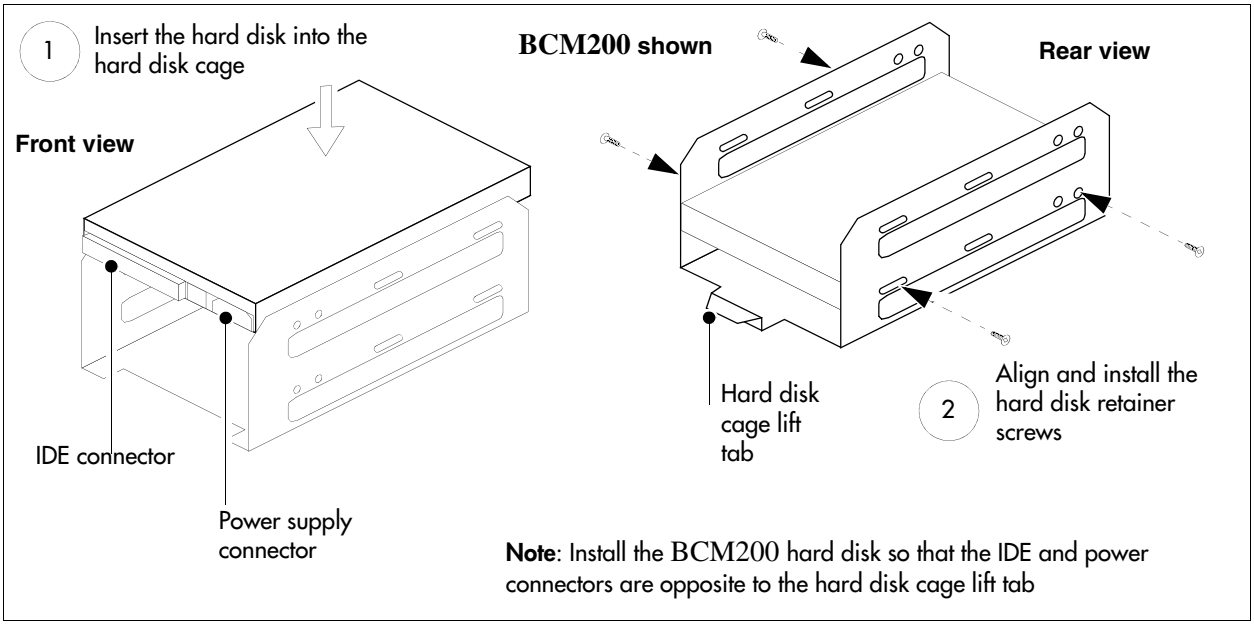

Installing a primary hard disk into a RAID hard disk cage

Use this procedure to install a primary hard disk into the RAID hard disk cage for the BCM200 or BCM400 system. Use this procedure if you need to replace a faulty primary hard disk or install a programmed hard disk from a standard configuration.

Nortel recommends that you replace a failed primary hard disk to retain full redundancy. Replace the failed primary hard disk during a period of low call traffic.

Caution: Use only Nortel-approved replacement components. Contact your account representative for the current list of approved replacement parts.

Warning: Protect the hardware components against damage from electrostatic discharge. Always wear a grounded wriststrap before you handle components. Always place the components in a static-free container.

Note: For a RAID upgrade kit, the mirror disk and primary disk IDE ribbon cables are preinstalled. If applicable, install the programmed hard disk from your single disk system into the RAID hard disk cage (use as the primary disk; see Figure 132).

Note: For a BCM200 system, orient the hard disk so that the power and IDE connectors are on the bottom and opposite to the hard disk cage lift tab (see Figure 130).

For a BCM400 system, orient the hard disk so that the power and IDE connectors are on the bottom and on the same side as the hard disk cage lift tab (see Figure 131).

Note: The hard disk storage capacity (in MB) for both primary and mirror hard disks must be identical. Equipment provided by Nortel assures correct hard disk capacity requirements.

To install a primary hard disk into a RAID hard disk cage

1. Position the primary hard disk into the top position of the RAID hard disk cage.
2. Align the hard disk and hard disk cage retaining screw holes. Fasten the hard disk cage retainer screws into both sides of the hard disk cage (see Figure 131).
3. Connect the correct primary IDE ribbon cable connector to the primary hard disk.

Figure 131 Install a primary hard disk into the RAID hard disk cage

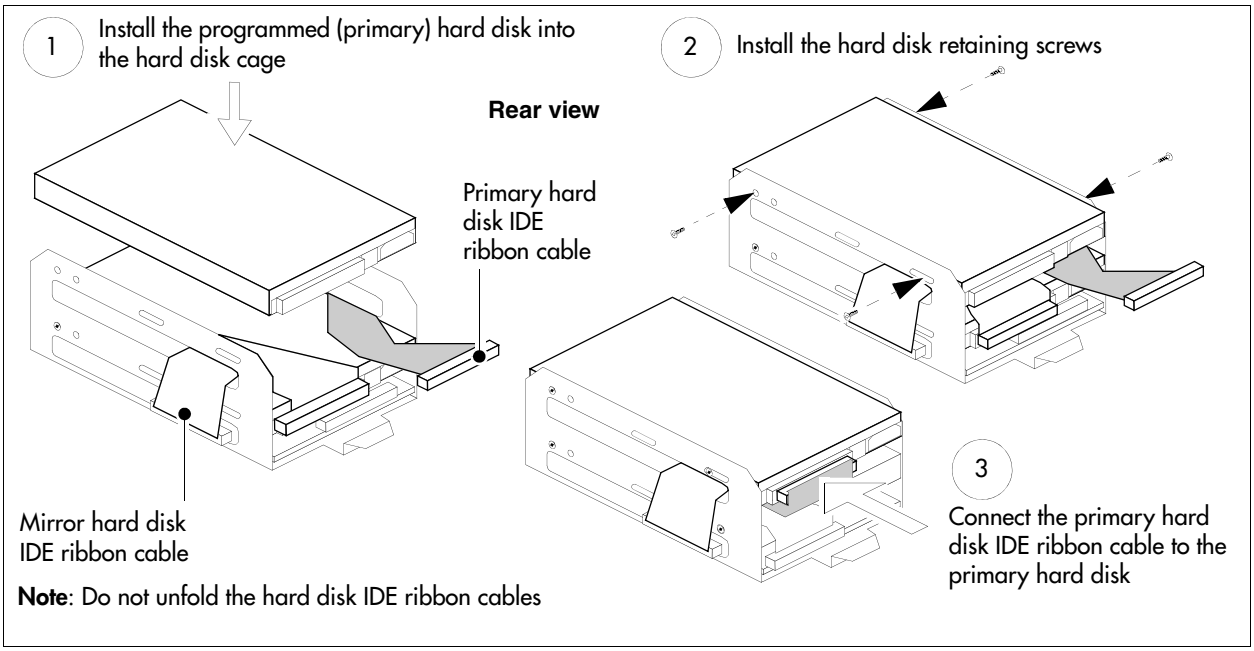

Installing a mirror hard disk into a RAID hard disk cage

Use this procedure to install the mirror hard disk into the RAID hard disk cage for the BCM200 and BCM400 systems. Use this procedure if you need to replace a faulty mirror hard disk.

Nortel recommends that you replace a failed mirror hard disk to retain full redundancy. Replace the failed mirror hard disk during a period of low call traffic. If you choose to remove both the primary and mirror hard disks from the hard disk cage, place an identifying mark on the primary hard disk to ensure correct installation.

Warning: Protect the hardware components against damage from electrostatic discharge. Always wear a grounded wriststrap before you handle components. Always place the components in a static-free container.

Note: For a RAID upgrade kit, the mirror disk and primary disk IDE ribbon cables are preinstalled. If applicable, install the programmed hard disk from your single disk system into the RAID hard disk cage (use as the primary disk; see Figure 131).

Note: For a BCM200 system, orient the hard disk so that the power and IDE connectors are on the bottom and opposite to the hard disk cage lift tab (see Figure 130).

For a BCM400 system, orient the hard disk so that the power and IDE connectors are on the bottom and on the same side as the hard disk cage lift tab (see Figure 132).

Note: The hard disk storage capacity (in MB) for both hard disks must be identical. Equipment provided by Nortel assures correct hard disk capacity requirements.

To install a mirror hard disk into a RAID hard disk cage

1 Install the mirror hard disk into the bottom position of the RAID hard disk cage.

2 Align the hard disk and hard disk cage retaining screw holes. Fasten the hard disk cage retainer screws into both sides of the hard disk cage (see Figure 132).

Figure 132 Install a mirror hard disk into the RAID hard disk cage

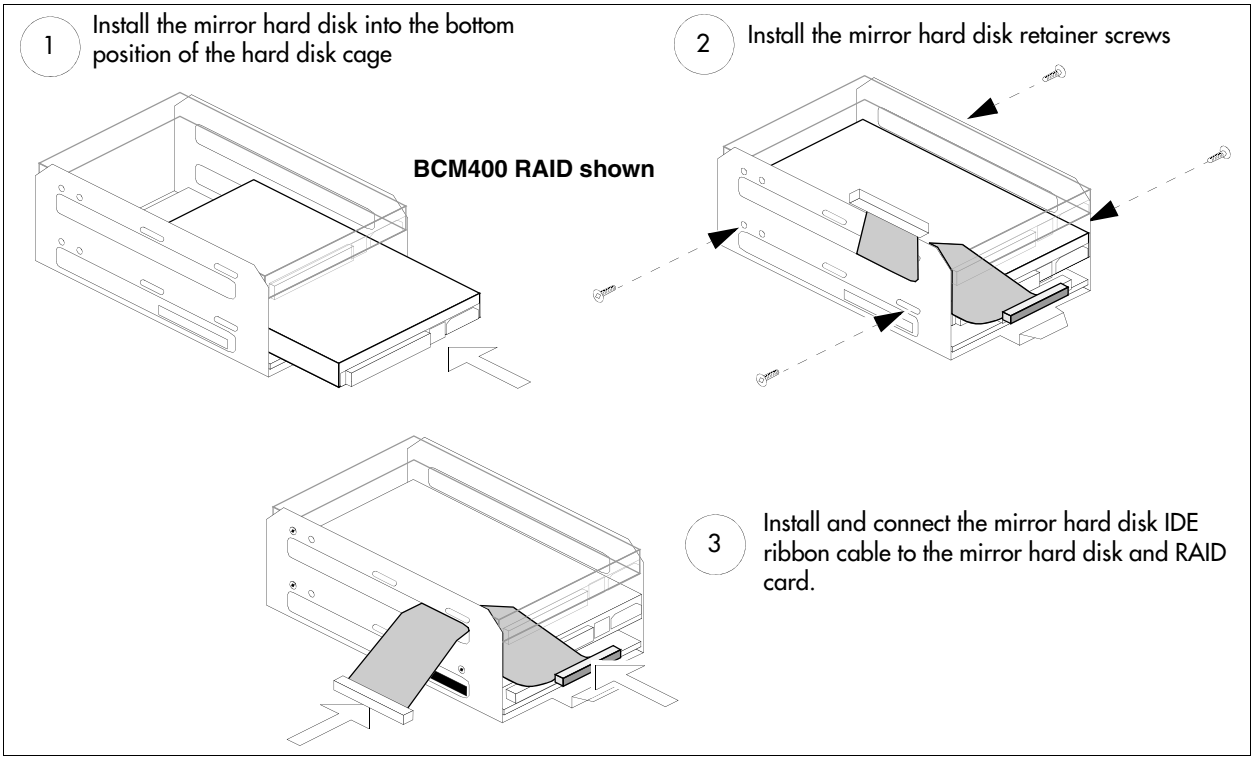

3 Install and connect the mirror hard disk IDE ribbon cable to the mirror hard disk and RAID card. Retain the folds in the mirror hard disk IDE ribbon cable. Ensure you connect the mirror hard disk to the correct RAID IDE connector.

4 If you removed the primary disk, see "Installing a primary hard disk into a RAID hard disk cage" on page 270. Install and connect the primary hard disk IDE ribbon cable to the RAID card. Retain the folds in the primary hard disk IDE ribbon cable. Ensure you connect the primary hard disk to the correct RAID IDE connector.

Caution: It is vital that you connect the correct IDE ribbon cables to the correct hard disks. Connect the primary ribbon cable to the primary hard disk. Connect the mirror ribbon cable to the mirror hard disk

Initializing the hard disk in a single-disk configuration

The BCM system is normally initialized prior to shipment. However, if you have to replace the hard disk in a standard single-disk system, use this procedure to initialize the BCM software. To initialize a RAID configuration, refer to "Initializing the hard disk in a RAID configuration" on page 275.

For further information on how to replace a hard disk in a standard configuration, refer to "Replacing a hard disk in the hard disk cage" on page 266. For further information on how to monitor disk activity, refer to "System monitoring and troubleshooting" on page 217.

After initialization, you must restore the configuration data to the BCM. Use the backup and restore utility (BRU) to restore configuration data (see "Using the backup and restore utility" on page 250). Nortel recommends that you maintain a current configuration backup. If you do not have a current backup, enter the configuration data manually.

Note: When you replace a hard disk, IP configuration data is lost. The BCM system IP address defaults to 10.10.10.1.

Perform the following procedures after you replace the hard disk and the system has booted up.

To initialize the hard disk in a single disk configuration

1 Attach the null modem cable to the serial port on the BCM main unit.

Note: The location of the transmit (TX) and receive (RX) pins on your terminal can vary. Refer to your terminal or computer documentation to confirm pin locations.

2 Attach the other end of the null modem cable to the serial port on the terminal or computer.

3 Ensure that the BCM main unit and your terminal or computer are turned on.

4 Access the BCM main unit using one of the following methods:

   a If using a terminal emulation program (Hyperterminal), attach a configuration computer to the BCM main unit serial port (recommended method).

   b If you are accessing the BCM main unit through your local area network through SSH (secure socket shell), use the default IP address 10.10.10.1.

5 When prompted for a **User ID**, type:

   `nnadmin`

6 When prompted for a **Domain**, press <ENTER>.

7 When prompted for a **Password**, type:

   `PlsChgMe!`

8 The Initialization menu screen appears.

9 Select Initialize Menu. The Initialize menu screen appears.

10 Select Initialize Universal Profile. The system executes the initialization process.

Note: If the initialization process detects a core software load mismatch between the MSC and the hard disk, the system displays a menu screen that prompts you to enter the most appropriate core load. The load on the MSC is the most recent load (if you replaced the hard disk). Select Do not select any load to by-pass the core upload and continue with the initialization process.

The system automatically reboots as part of the initialization process. When the system reboots, the telnet session disconnects.

11 Do one of the following:

- Manually reenter configuration data ("Configuring the BCM system" on page 185).
- Restore system and data information (except Telephony and Registry) from your backup data. For information on how to restore data to your system from a backup, see "Using the backup and restore utility" on page 250.

Note: Perform a backup only on similar software versions.

Initializing the hard disk in a RAID configuration

After replacing either of the hard disks in a RAID configuration, the new hard disk is initialized automatically when the system is restarted. You do not need to perform specific initialization procedures.

Chapter 23
Replacing or upgrading a power supply

The BCM200 uses a standard power supply. The BCM400 and expansion units use either a standard or redundant power supply.

This chapter describes the following power supply installation and replacement techniques:

- "Replacing a standard power supply" on page 277
- "Upgrading to a redundant power supply" on page 288

Note: For the BCM400 RFO configuration only, a redundant power supply is included. Use a redundant fan with the redundant power supply (see "Installing a BCM400 cooling fan" on page 328).

Warning: You must remove all of the connections to the BCM system before you power the system down. Failure to disconnect the lines before you power down the system can cause damage to the system.

Warning: Protect the hardware components against damage from electrostatic discharge. Always wear a grounded wrist strap before you handle components. Always place the components in a static-free container.

Replacing a standard power supply

This section describes how to remove and install a standard power supply in the main unit and contains the following procedures:

- "Removing a BCM200 power supply" on page 278
- "Installing a BCM200 standard power supply" on page 280
- "Removing a BCM400 standard power supply" on page 284
- "Installing a BCM400 standard power supply" on page 286

If the main unit or expansion unit has a standard power supply that fails, then all activity on the system stops. This procedure describes how to replace a failed standard power supply unit. Figure 133 provides an overview of the process for replacing a standard power supply.

Figure 133 Standard power supply replacement overview

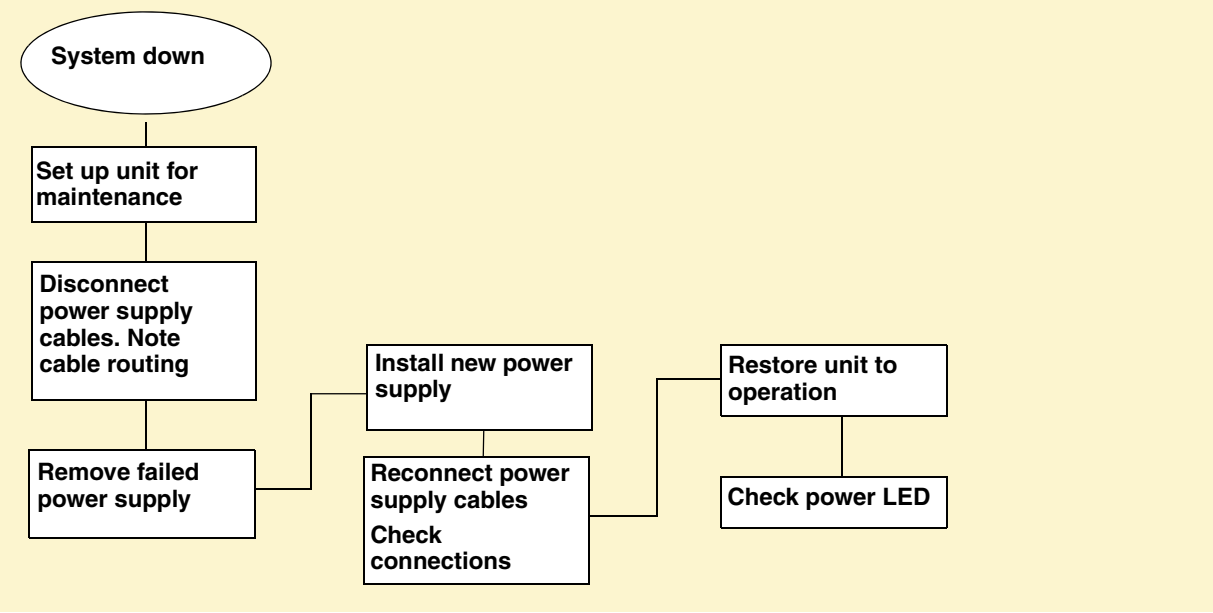

Removing a BCM200 power supply

If the standard power supply fails, the system is down. Use this procedure to remove the standard power supply from a BCM200 main unit.

Warning: Protect the hardware components against damage from electrostatic discharge. Always wear a grounded wrist strap before you handle components. Always place the components in a static-free container.

Warning: Power supply cable management is critical. Loose or incorrectly positioned cables can result in cable damage.

To remove the BCM200 power supply

1. Set up the BCM200 for maintenance (see "Performing a system shutdown" on page 233).
2. Disconnect all cables from the front of the base function tray. Disconnect the main unit and the expansion unit (if applicable) from the AC power connection.
3. Remove the top cover from the main unit (see "Removing the main unit top cover" on page 246).
4. Attach one end of the grounding strap to your wrist and the other end to a grounded metal surface.
5. Locate and disconnect the power supply cables from the I/O card, media bay backplane, and hard disk.

6 Disconnect all cables from the I/O card.

7 Partially remove the base function tray (see "Removing the base function tray" on page 236).

8 Remove the screws that secure the MSC guide bracket to the I/O card. Place the MSC guide bracket and screws in a safe location (see Figure 134).

Figure 134 Remove the BCM200 MSC guide bracket

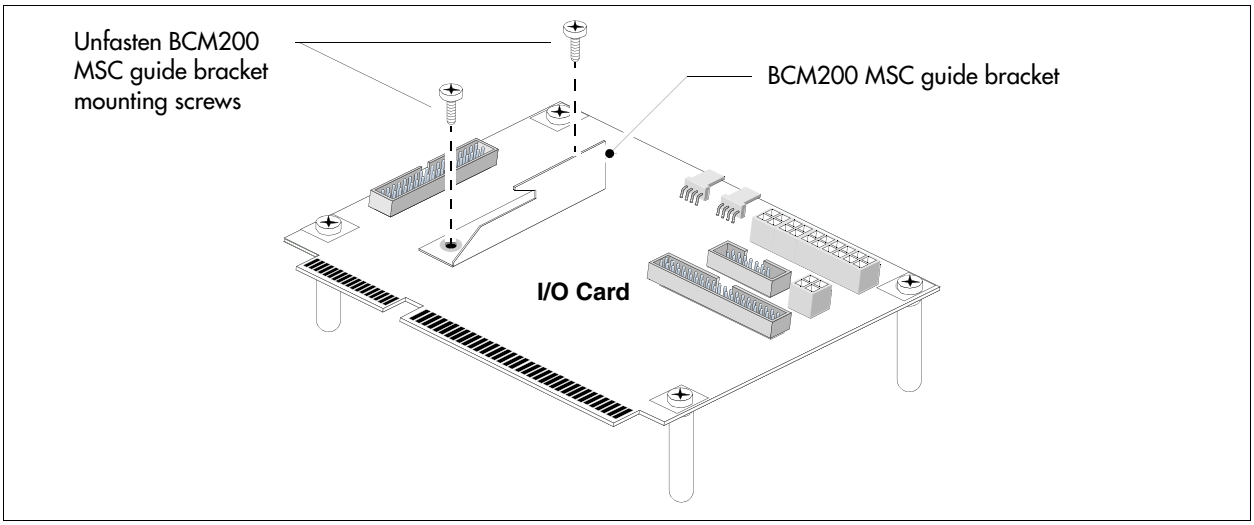

9 Remove the screws that secure the I/O card to the main unit (see Figure 135). Place the screws in a safe location.

10 Remove the I/O card from the main unit. Place the I/O card in a safe, clean, and static-free location.

Note: Power supply and hard disk cables run underneath the I/O card. Remember the location and position of the power supply and hard disk cables. You will need to route the cables in the same manner when you reinstall the power supply.

Figure 135 Remove the I/O card from the BCM200 main unit

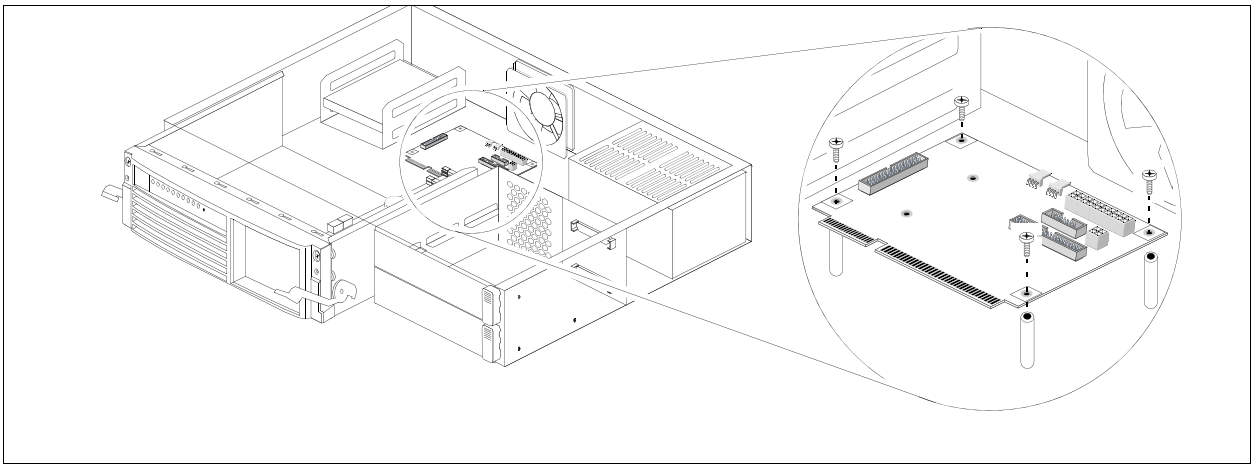

11 Remove the four power supply chassis screws from the back of the main unit (see Figure 136). Place the screws in a safe location.

Figure 136 Remove the BCM200 power supply screws

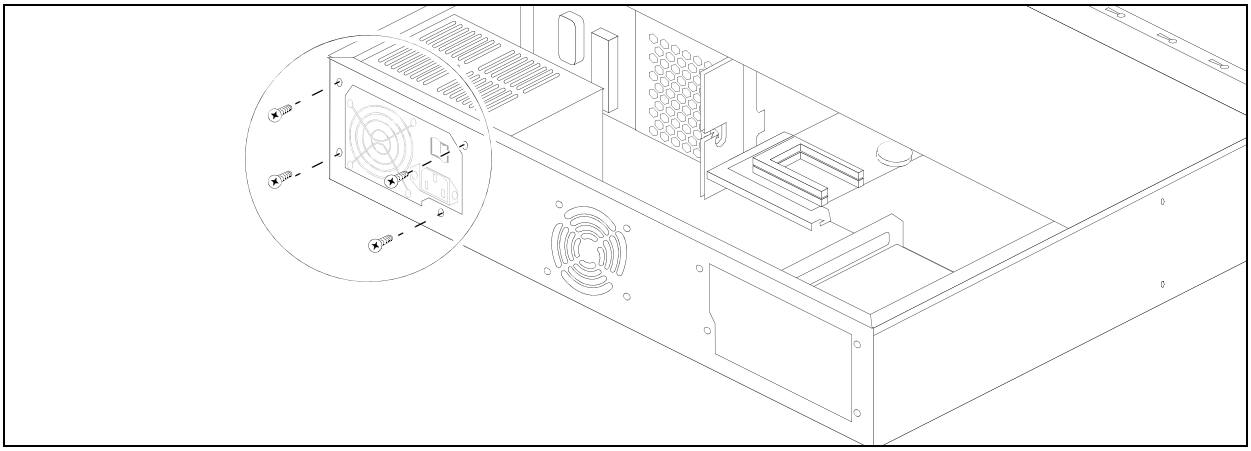

12 Separate the power supply cable from the hard disk cable. Cut the tie-wrap that secures the power supply cable to the hard disk cable (see Figure 138).

13 Remove the power supply from the interior of the main unit.

Note: Remove the power supply carefully. Ensure the power supply cables are not entangled or connected to any internal components.

Installing a BCM200 standard power supply

Use this procedure to install a functional standard power supply in a BCM200 main unit. The I/O card must be removed from the main unit before you perform this procedure. The base function tray must be partially removed.

Warning: Protect the hardware components against damage from electrostatic discharge. Always wear a grounded wrist strap before you handle components. Always place the components in a static-free container.

Warning: Power supply cable management is critical. Loose or incorrectly positioned cables can result in cable damage.

To install a BCM200 standard power supply

1 Obtain and use only the power supply recommended by Nortel.

2 Place the new power supply into the main unit.

Note: Install the power supply carefully. Ensure the power supply cables are not entangled or crushed against any internal components.

3 Secure the power supply to the main unit. Align the power supply mounting holes with the holes in the main unit. Install the screws at the rear of the main unit (see Figure 137). Do not over-tighten the power supply mounting screws.

Figure 137 Install the BCM200 power supply chassis screws

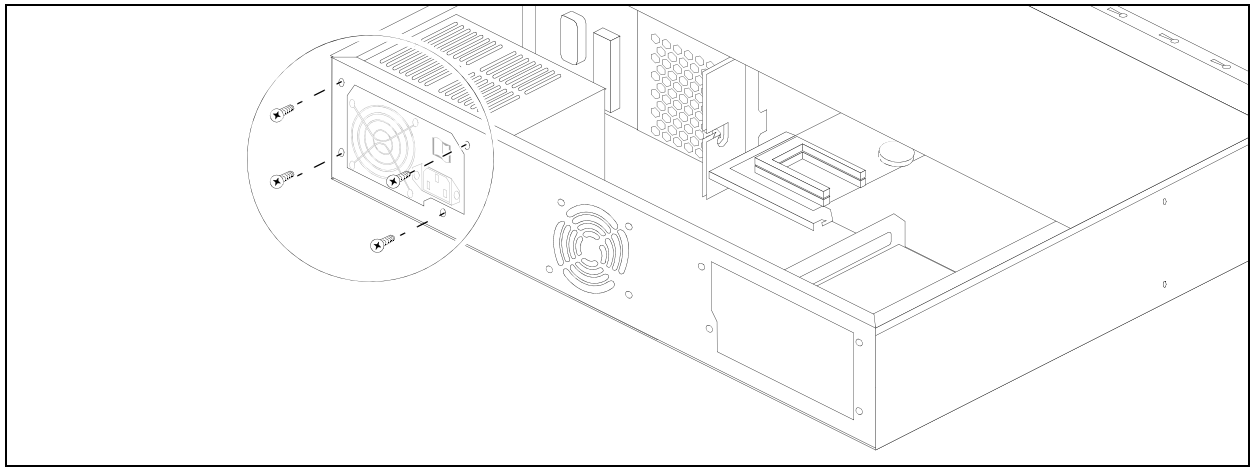

4 Run the P4, P5, or P6 power supply cable and the IDE cable to the hard disk. The I/O card is not installed in the main unit for this step:

a Route the power cable between the I/O card chassis standoffs in the area shown (see Figure 138). Run the IDE cable in the same manner.

b Tie-wrap the power cable to the hard disk cable. Position the tie-wrap 1/2 inch from the hard disk cable sheathing.

c Ensure the remainder of the power cable does not interfere with internal components.

Figure 138 Power and hard disk cable routing

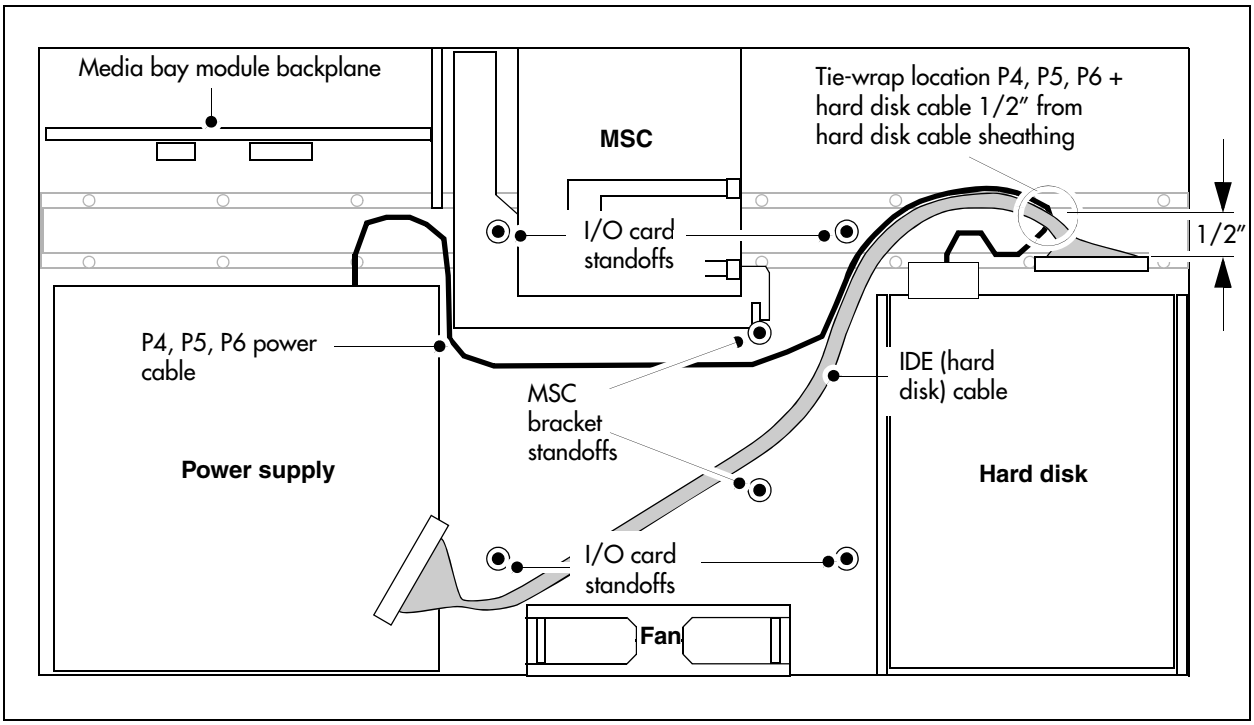

5 Install the I/O card (see Figure 139). The I/O card installs on top of the power supply and IDE cables. Ensure the cables maintain their position as shown in the previous step.

Figure 139 Install the I/O card in the BCM200 main unit

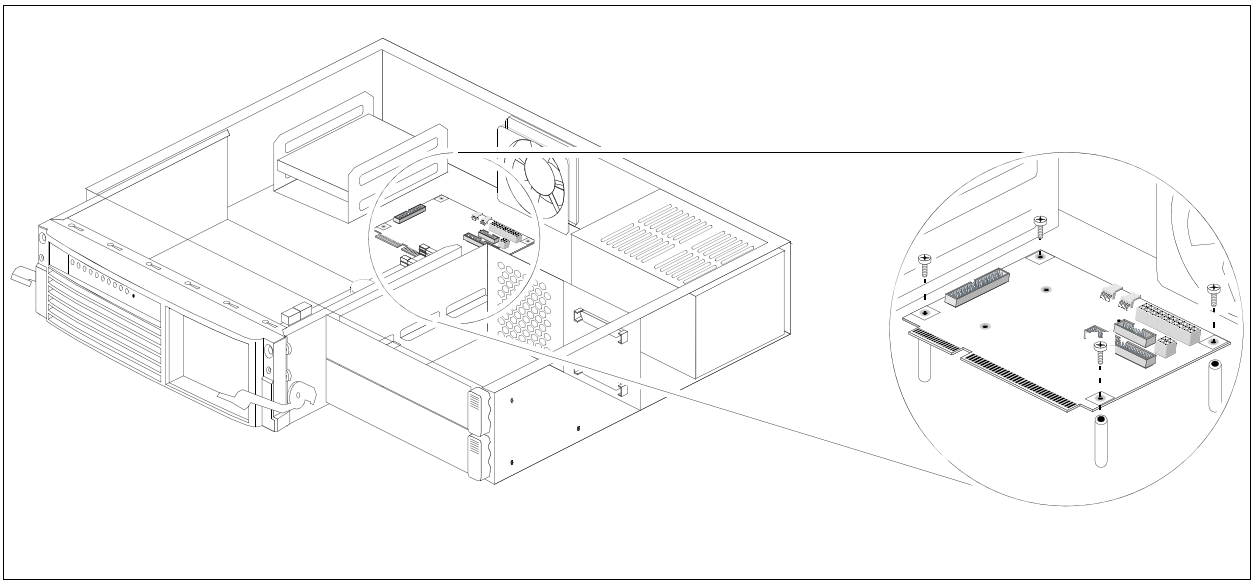

6 Install the BCM200 MSC bracket (see Figure 140).

Figure 140 Install the BCM200 MSC guide bracket

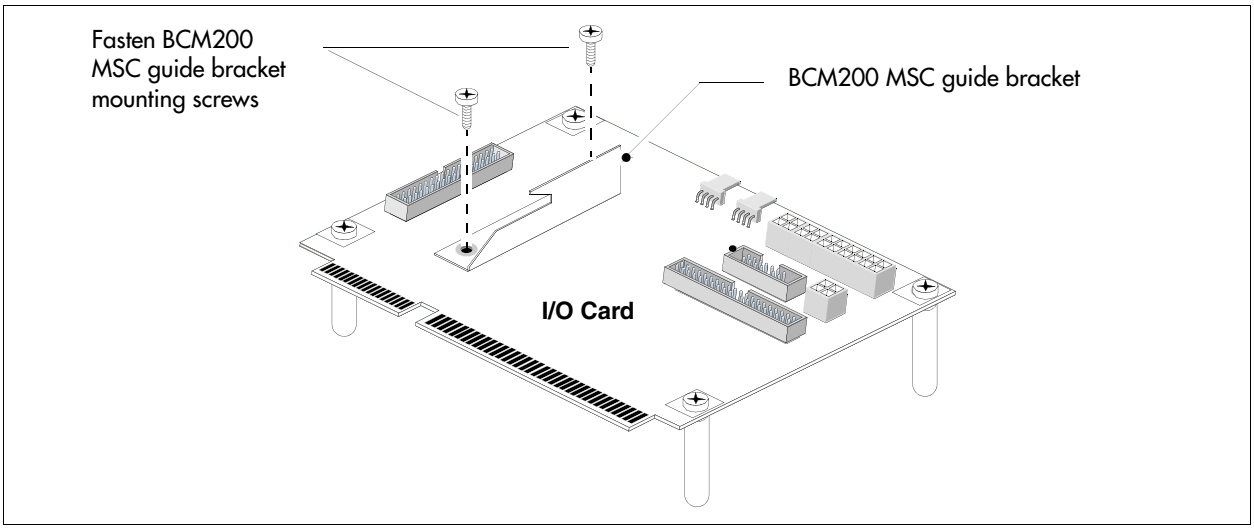

7 Connect a P1 power cable to the media bay backplane connector. Tie-wrap the excess cable as shown in Figure 141.

Figure 141 Tie-wrap excess P1 power cable length

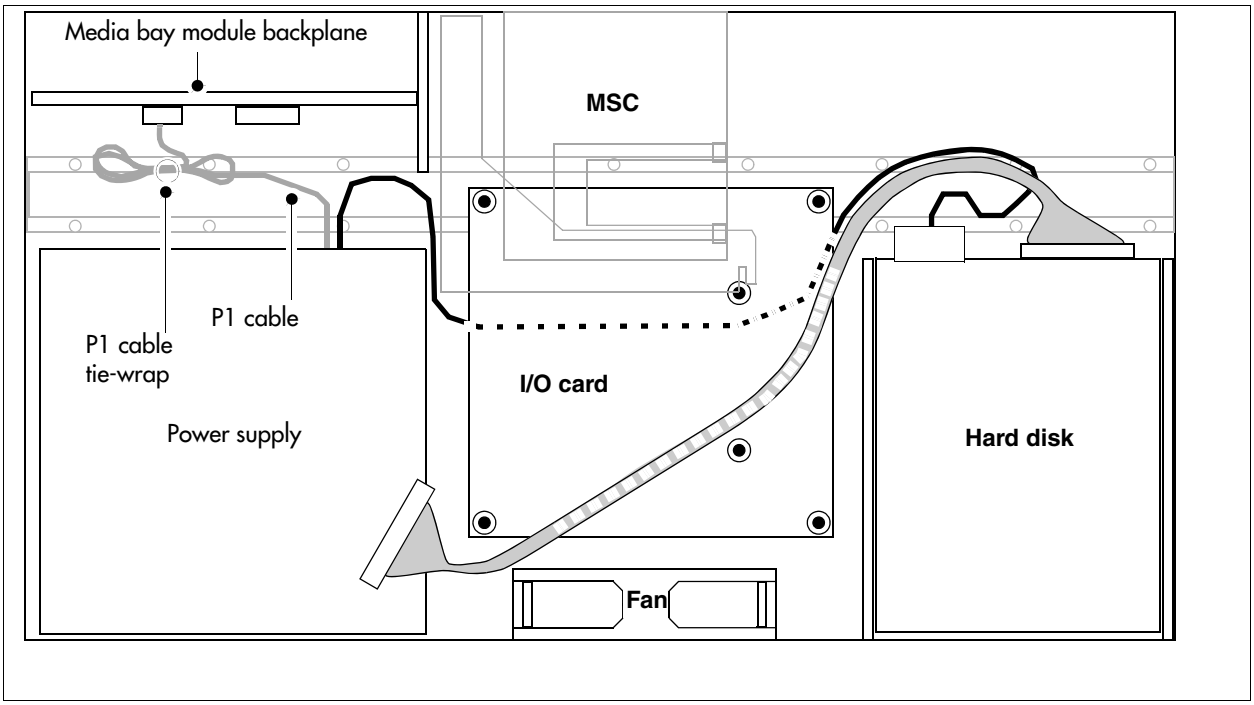

8 Connect the hard disk cable to the secondary IDE I/O card connection. Connect the hard disk cable to the hard disk connector. Connect the power connector to the hard disk (see Figure 141). Insert extra connectors under the hard disk.

9 Connect the 20-pin motherboard power cable (P1) and the +12v power cable (P9) to the I/O card.

10 Loop the cables together and tie-wrap to the side of the power supply to remove P1, P9, P3, P7/8 excess cable length. Fold the cables to the rear of the main unit and secure with a tie-wrap. Ensure the cables are tied far enough back so they do not interfere with the insertion of the base function tray.

11 Attach the fan plug to the I/O card Fan #1 connection. Loop excess fan cable length under the I/O card.

Note: Verify the power supply cables are connected correctly and do not interfere with any internal components.

12 Insert the base function tray fully into the main unit. Ensure the base function tray does not interfere with any cabling.

13 Replace the main unit top cover. See "Installing the main unit top cover" on page 248.

14 Press the power supply switch to the ON position (if applicable). Plug the BCM power cord into an AC power outlet.

15 Restore the BCM system to operation. For details, refer to "Restarting the system after maintenance" on page 234. The BCM system starts when you connect the AC power cord. Wait for the start-up process to finish.

16 Monitor the power LED on the base function tray. Refer to Table 83.

Table 83 Power supply LED

LED Label	Description	Green LED On	Green LED Flash	Red LED On (Only)	Green LED Off
⏻	Indicates state of system power.	OK	N/A	A minimum of 1 PS needs attention.	N/A

a If the BCM system does not power up, press the reset button on the base function tray front panel.

b If the Power LED is red and does not respond to a manual reset, this indicates a faulty power condition. Contact your Nortel representative.

c If the Power LED is green, the system is operating normally.

Removing a BCM400 standard power supply

Use this procedure to remove the standard power supply from a BCM400 main unit.

Warning: Protect the hardware components against damage from electrostatic discharge. Always wear a grounded wrist strap before you handle components. Always place the components in a static-free container.

Warning: Power supply cable management is critical. Loose or incorrectly positioned cables can result in cable damage.

To remove a BCM400 standard power supply

1. Set up the BCM400 for maintenance (see "Performing a system shutdown" on page 233).
2. Disconnect all cables from the front of the base function tray.
3. Disconnect the main unit and the expansion unit (if applicable) from the AC power connection.
4. Remove the top cover from the main unit (see "Removing the main unit top cover" on page 246).
5. Attach one end of the grounding strap to your wrist and the other end to a grounded metal surface.
6. Disconnect all cables from the I/O card.
7. Locate and disconnect the power supply cables from the media bay backplane and hard disk.
8. Partially remove the base function tray (see "Removing the base function tray" on page 236).
9. Unfasten the power supply cable clamp located on the underside of the main unit top cover (see Figure 142). Gather the power supply cables away from the interior and toward the rear of the main unit.
10. Remove the four power supply chassis screws from the back of the main unit (see Figure 142). Place the screws in a safe location.

Figure 142 Remove the BCM400 power supply screws

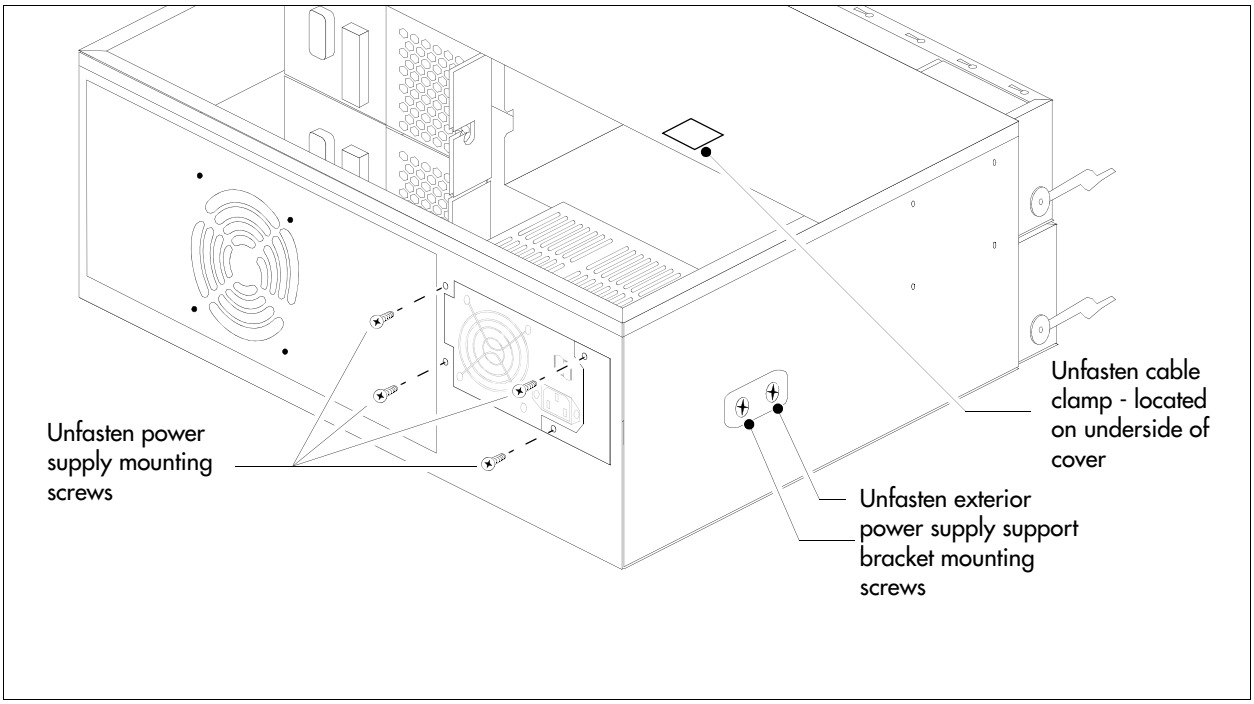

11 Unfasten the exterior and interior power supply support bracket mounting screws (see Figure 143). Place the screws in a safe location.

12 Remove the power supply and support bracket out and away from the BCM400 main unit.

Figure 143 Remove the power supply and support bracket

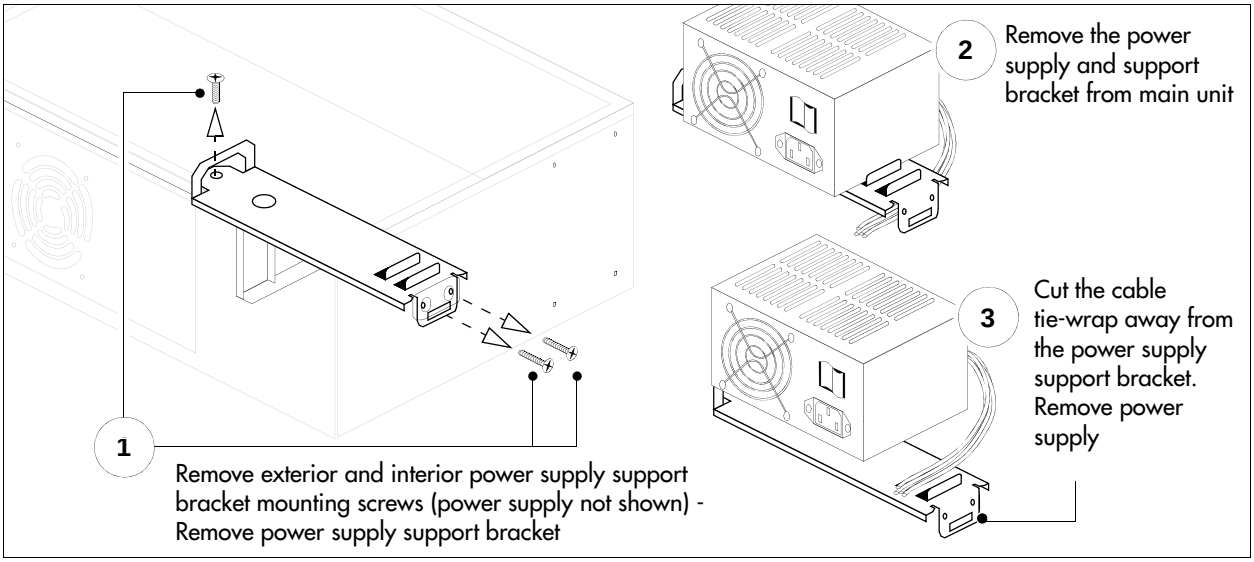

13 Remove the tie-wrap from the power supply support bracket. Place the power supply in a safe, static-free location.

Installing a BCM400 standard power supply

Use this procedure to install a functional standard power supply in a BCM400 main unit. The base function and advanced function trays must be partially removed.

Warning: Protect the hardware components against damage from electrostatic discharge. Always wear a grounded wrist strap before you handle components. Always place the components in a static-free container.

Warning: Power supply cable management is critical. Loose or incorrectly positioned cables can result in cable damage.

To install a BCM400 standard power supply

1 Ensure the new power supply is an auto-adjust power supply.

2 Insert a tie-wrap in the power supply support bracket lanclet.

3 Place the standard power supply (top down) on a flat surface. Place the power supply support bracket on the bottom surface of the power supply.

4 Gather together and route the main card 20-pin power cable (P1) and the +12v power cable (P9) at the tie-wrap.

5 Secure the power cables to the power supply support bracket with the tie-wrap inserted in step 2 (see Figure 144).

Figure 144 Fasten the power supply support bracket cables

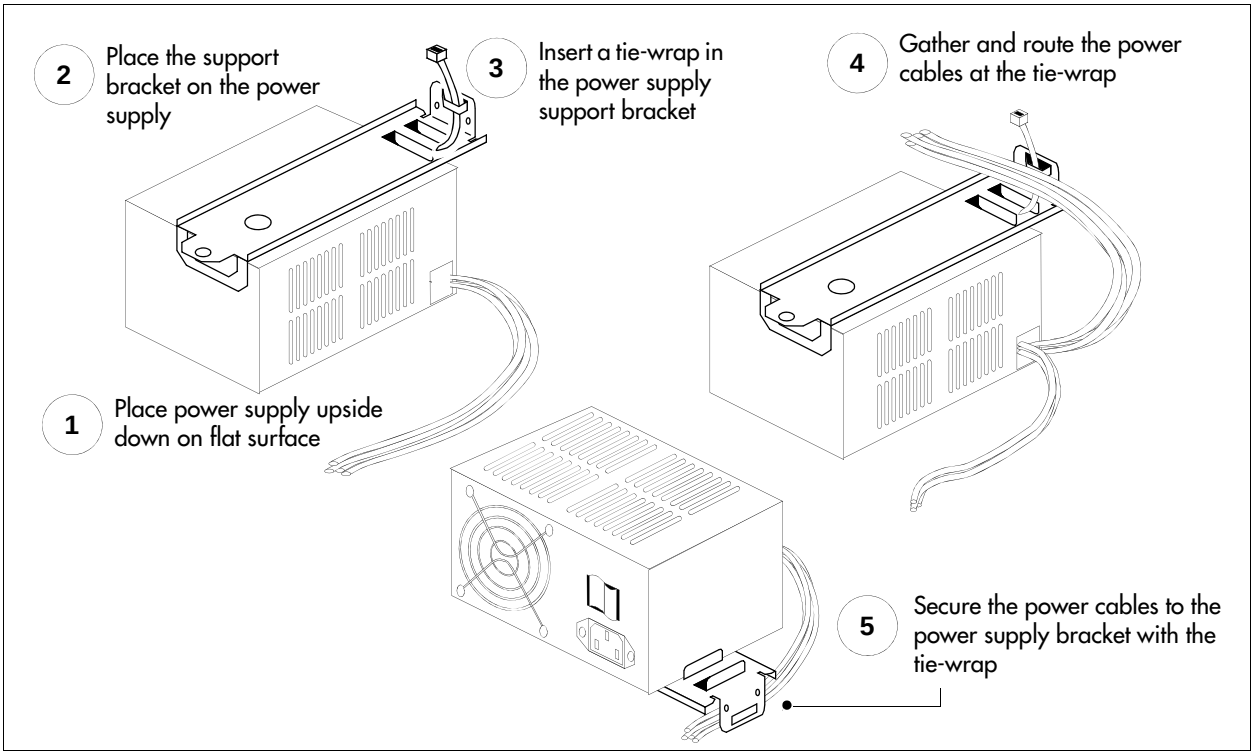

6 Insert the standard power supply and support bracket in the main unit. The power supply support bracket rests on the MSC guide bracket on one side, and the chassis wall on the other.

7 Ensure the mounting holes in the power supply support bracket align with the holes in the main unit.

8 Fasten the power supply support bracket mounting screws (see Figure 145).

Figure 145 Fasten the power supply support bracket to the main unit

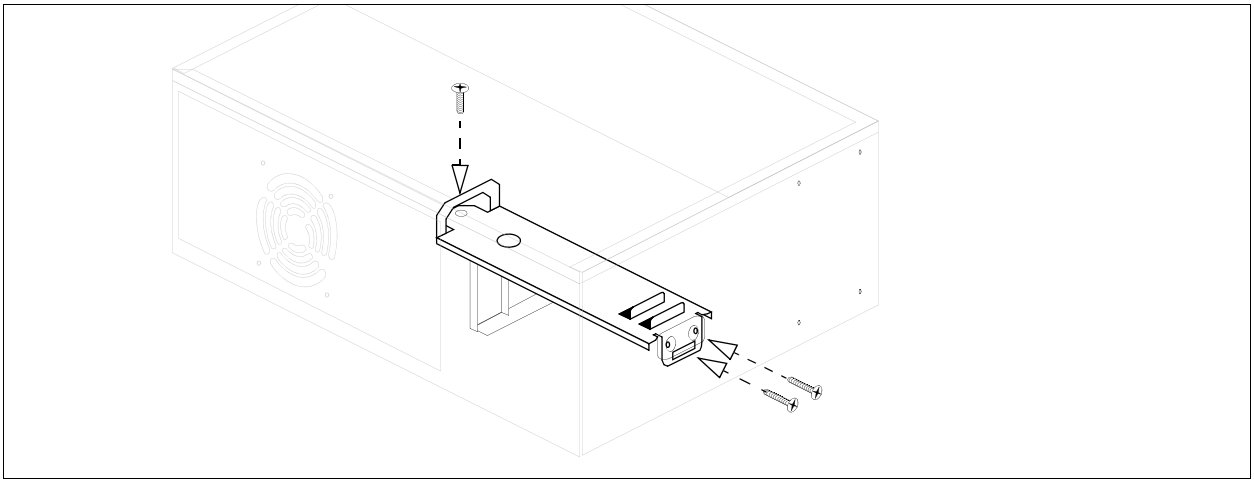

9 Align the mounting holes in the power supply with the chassis holes at the rear of the main unit. Fasten the power supply mounting screws to the main unit (see Figure 146).

Figure 146 Fasten the standard power supply to the main unit

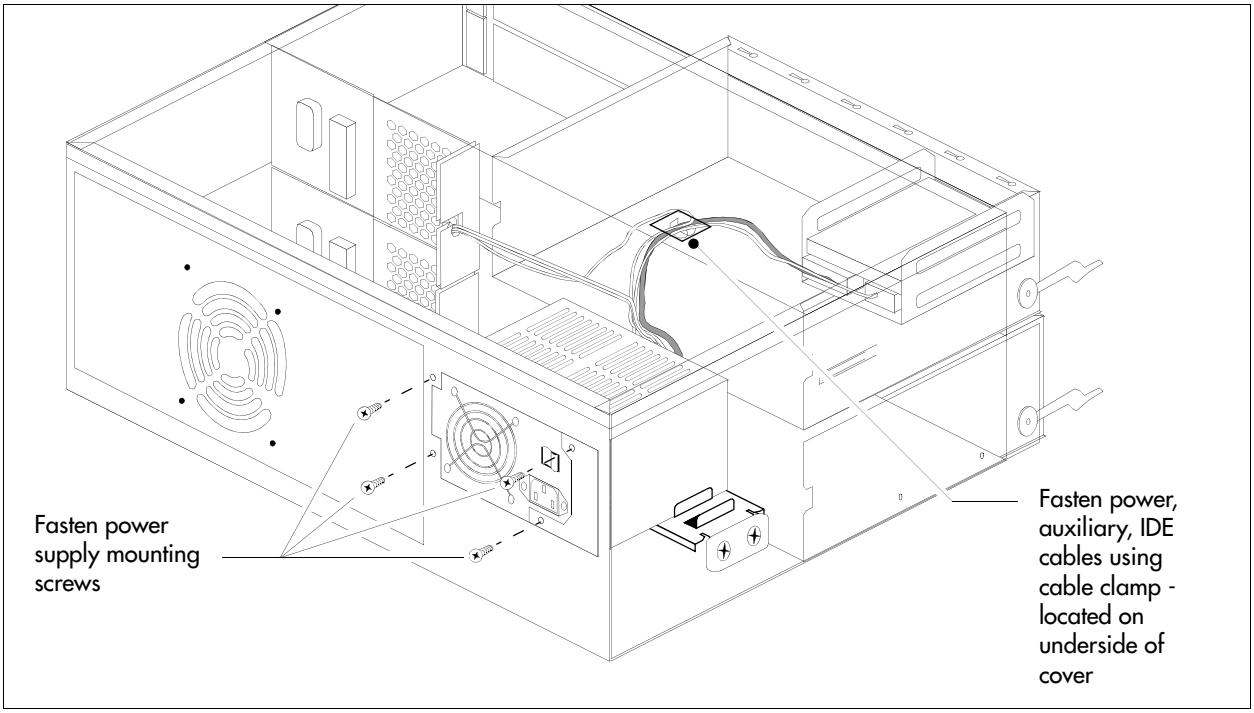

10 Attach the 20-pin motherboard connector and the +12V power connector into the I/O card.

11 Route the power cable, auxiliary, and IDE cables to the hard disk cage. Bundle the cables together and fasten to the roof of the main unit using the cable clamp (see Figure 146).

12 Connect the power cable and IDE cable to the hard disk.

13 Run the auxiliary cable to the chassis cable slot (see the next step).

14 Connect cable runs P2 and P3 to the media bay backplane as follows.

- **a** Connect cable P2 into the bottom media bay module backplane power connector.
- **b** Connect cable P3 into the top media bay module backplane connector.
- **c** Bundle power cables P2 and P3 along with auxiliary cable (P7 or P8) together with a grommet (see Figure 154).
- **d** Insert the P2, P3, and auxiliary cable into the cable slot on the chassis (secured with the grommet).

Upgrading to a redundant power supply

Use the procedures in this section to upgrade a BCM400 main unit, currently equipped with a standard power supply, with a redundant power supply. This section contains the following procedures:

- "Removing the PSU status connector jumper" on page 289
- "Installing a redundant power supply cage (BCM400 only)" on page 290
- "Removing a BCM400 redundant power supply cage" on page 295
- "Installing a power supply module" on page 297
- "Removing a power supply module" on page 299

Figure 147 provides an overview of the steps required to upgrade your BCM400 system from a standard power supply to a redundant power supply.

Note: A BCM expansion unit with a standard power supply cannot be upgraded. You must replace the expansion unit.

Note: When you install a redundant power supply, you must also install a redundant cooling fan included with the redundancy upgrade kit.

Note: When you install a redundant power supply, you must also remove the jumper installed in the power supply unit status connector (RPS output signaling connector) on the I/O card.

Figure 147 Redundant power supply upgrade overview

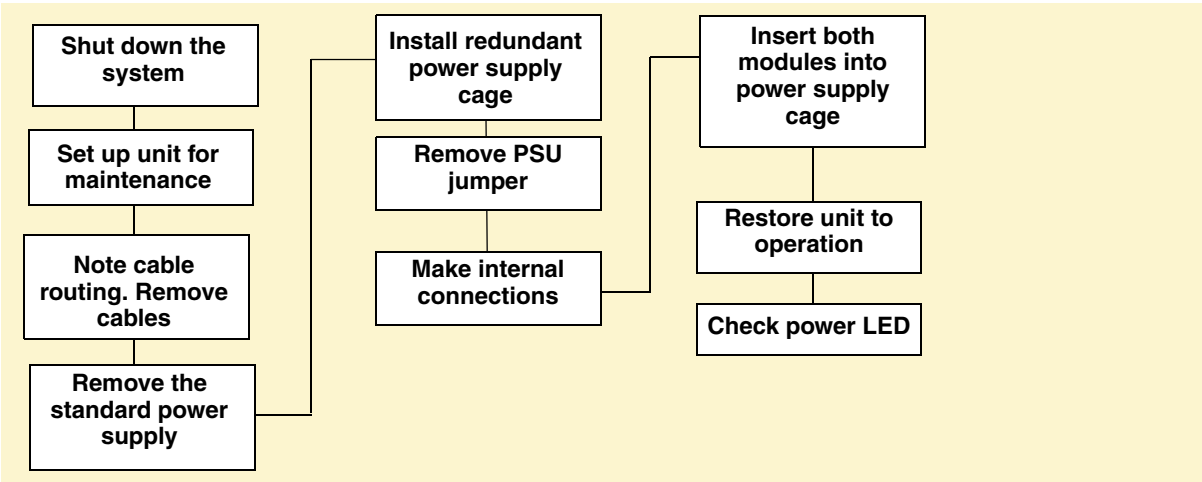

Removing the PSU status connector jumper

Use this procedure if you are installing a redundant power supply for the first time. Use this procedure only with the BCM400 main unit.

Note: When you upgrade to a redundant power supply, you must also install a redundant fan. Refer to "Installing a BCM400 cooling fan" on page 328.

Warning: Protect the hardware components against damage from electrostatic discharge. Always wear a grounded wrist strap before you handle components. Always place the components in a static-free container.

To remove the PSU status connector jumper

1. Shut down the system (see "Performing a system shutdown" on page 233).
2. Disconnect the BCM400 system from the AC power outlet.
3. Remove the main unit top cover. Refer to "Removing the main unit top cover" on page 246.
4. Locate the PSU status connector on the I/O card (see Figure 148).
5. Remove the RPS output signaling connector jumper. Use needle-nose pliers to pull the jumper out and away from the connector. Place the jumper in a safe location.
6. Connect the PA cable to the PSU status connector (see Figure 148 on page 290).

Figure 148 Remove the PSU status connector jumper

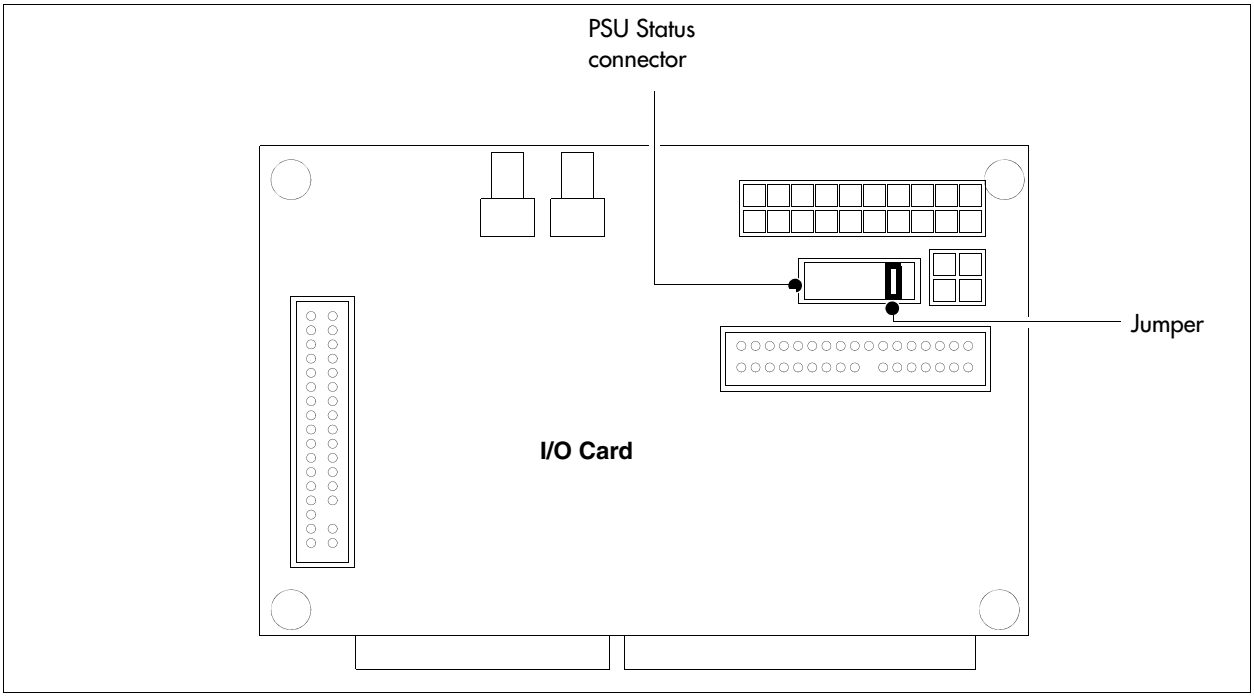

Installing a redundant power supply cage (BCM400 only)

This procedure describes how to install a redundant power supply cage in the BCM400 main unit. After you install the redundant power supply cage in the main unit, install the two power supply modules (see "Installing a power supply module" on page 297).

Note: When you upgrade to a redundant power supply, you must also install a redundant fan. Refer to "Installing a BCM400 cooling fan" on page 328.

Note: When you install a redundant power supply, you must also remove the jumper installed in the PSU Status connector (RPS output signaling connector) on the I/O card. See "Removing the PSU status connector jumper" on page 289.

Warning: Protect the hardware components against damage from electrostatic discharge. Always wear a grounded wrist strap before you handle components. Always place the components in a static-free container.

To install a redundant power supply cage (BCM400 only)

1. Shut down the system (see "Performing a system shutdown" on page 233).
2. Disconnect the BCM400 system from the AC power outlet.
3. Remove the standard power supply from the main unit (see "Removing a BCM400 standard power supply" on page 284).
4. Remove the power supply support bracket from the main unit (see "Removing a BCM400 standard power supply" on page 284).
5. Remove the power supply adapter tab from the support bracket (see Figure 149). Use pliers to bend and snap the tab away from the support bracket. Make sure you remove only the inner adapter tab.

Figure 149 Remove the BCM400 power supply adapter tab from the support bracket

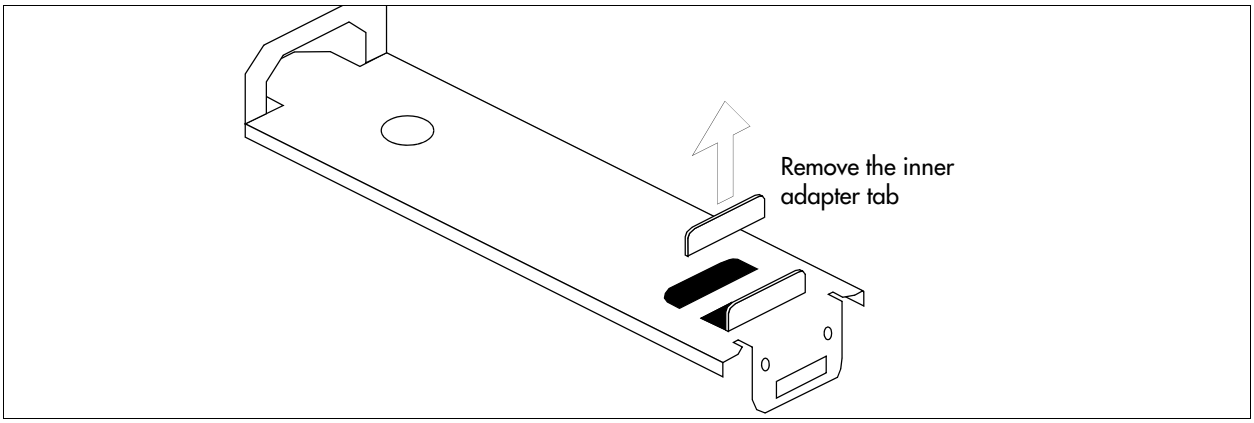

6. Remove the knockout bracket from the rear of the main unit (see Figure 150).

Figure 150 Remove the power supply knockout bracket

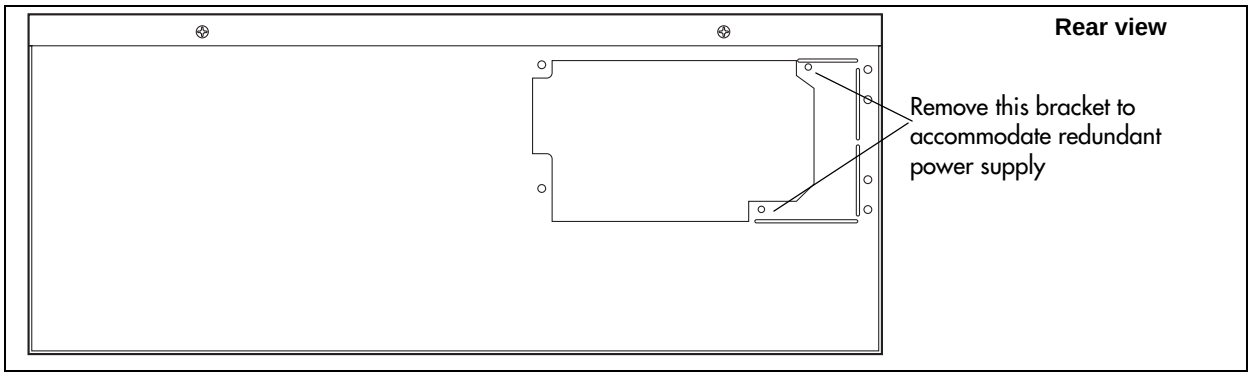

7 Remove both power supply modules from the redundant power supply cage before you install the power supply in the main unit (see "Removing a power supply module" on page 299).

8 Place the redundant power supply (top down) on a flat surface. Place the power supply support bracket on the bottom surface of the power supply.

9 Insert a tie-wrap in the power supply support bracket lanclet.

10 Gather together and route the motherboard 20-pin power cable (P1), the +12v power cable (P9), the 3.3v load cable (PB), and the PS monitor cable (PA) to the tie-wrap.

11 Secure the cables to the power supply support bracket with the tie-wrap (see Figure 151).

Figure 151 Fasten the power supply support bracket cables

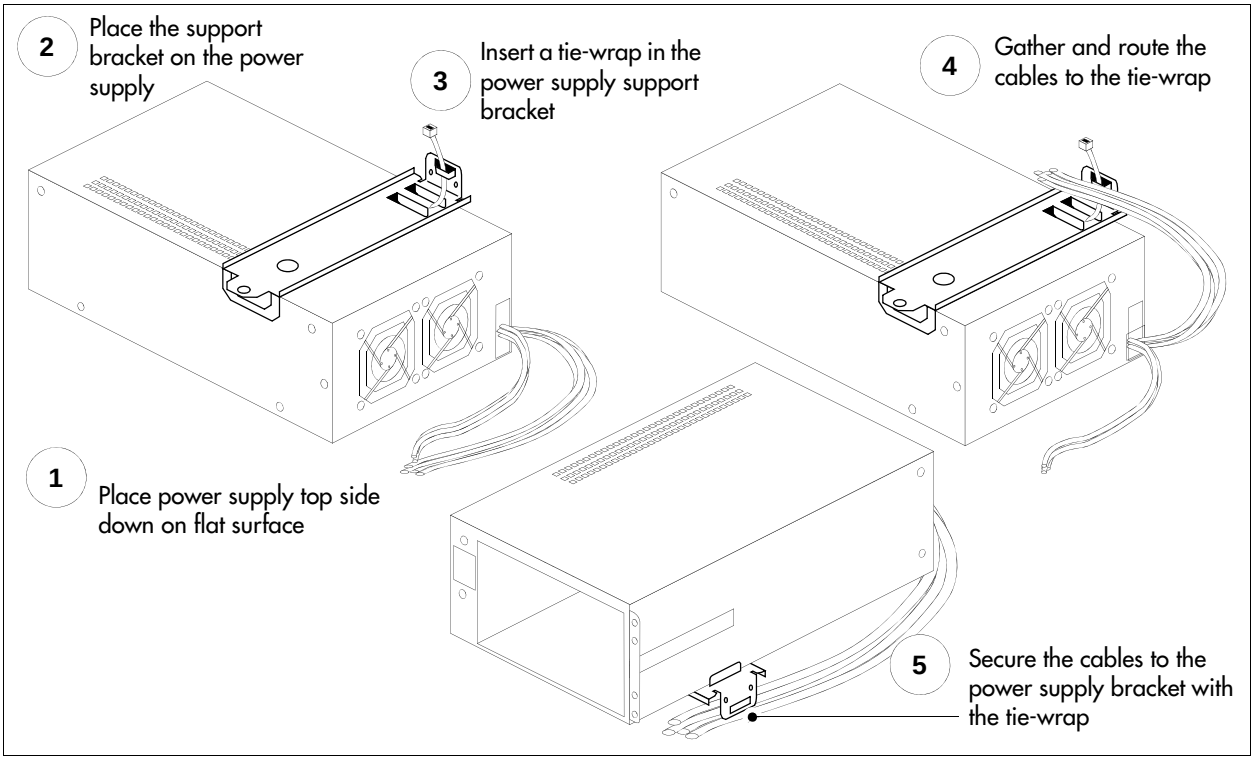

12 Install the power supply support bracket in the BCM400 main unit (see Figure 145).

13 Position the redundant power supply cage in the main unit. Make sure the power supply module tray opening faces the rear of the main unit.

14 Align the mounting holes in the redundant power supply cage with the screw holes in the main unit.

15 Attach the redundant power supply cage to the main unit using the four chassis mounting screws. Refer to Figure 152.

Figure 152 Attach the redundant power supply cage

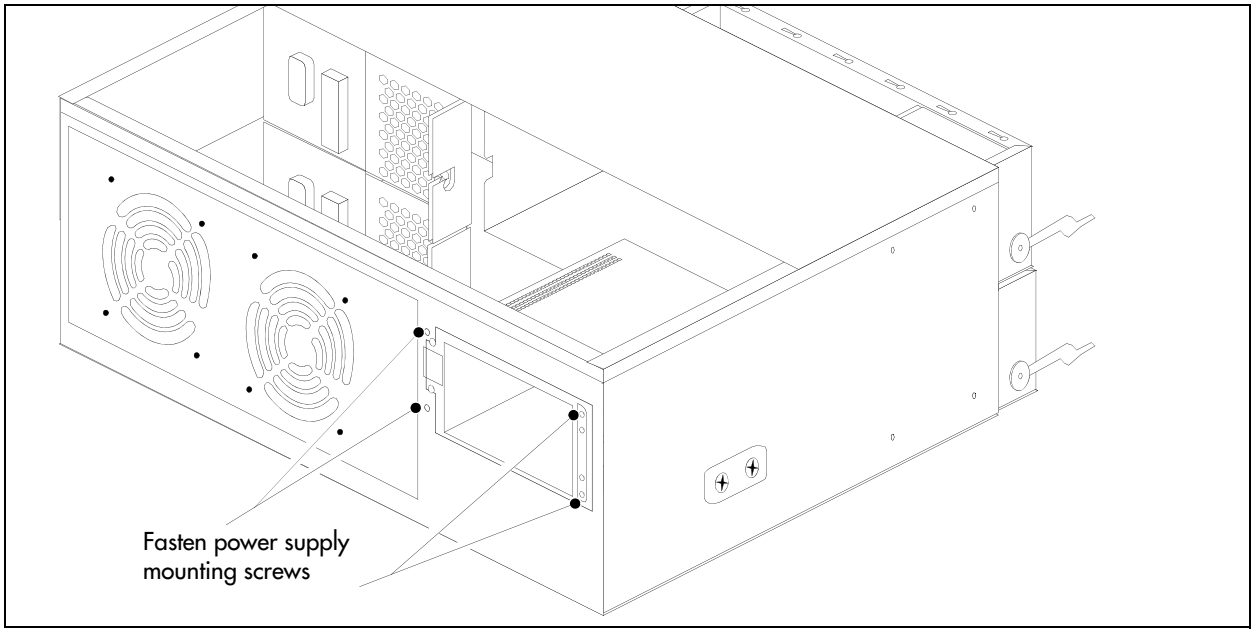

16 If you have not already done so, install a redundant fan into the unit. Refer to "Installing a BCM400 cooling fan" on page 328.

17 Install a new cable clamp on the underside of the top cover. Place the new cable clamp beside the existing cable clamp (see Figure 153). Use the cable clamp to secure the power, IDE, and auxiliary cables to the roof of the main unit.

Figure 153 Install a new cable clamp

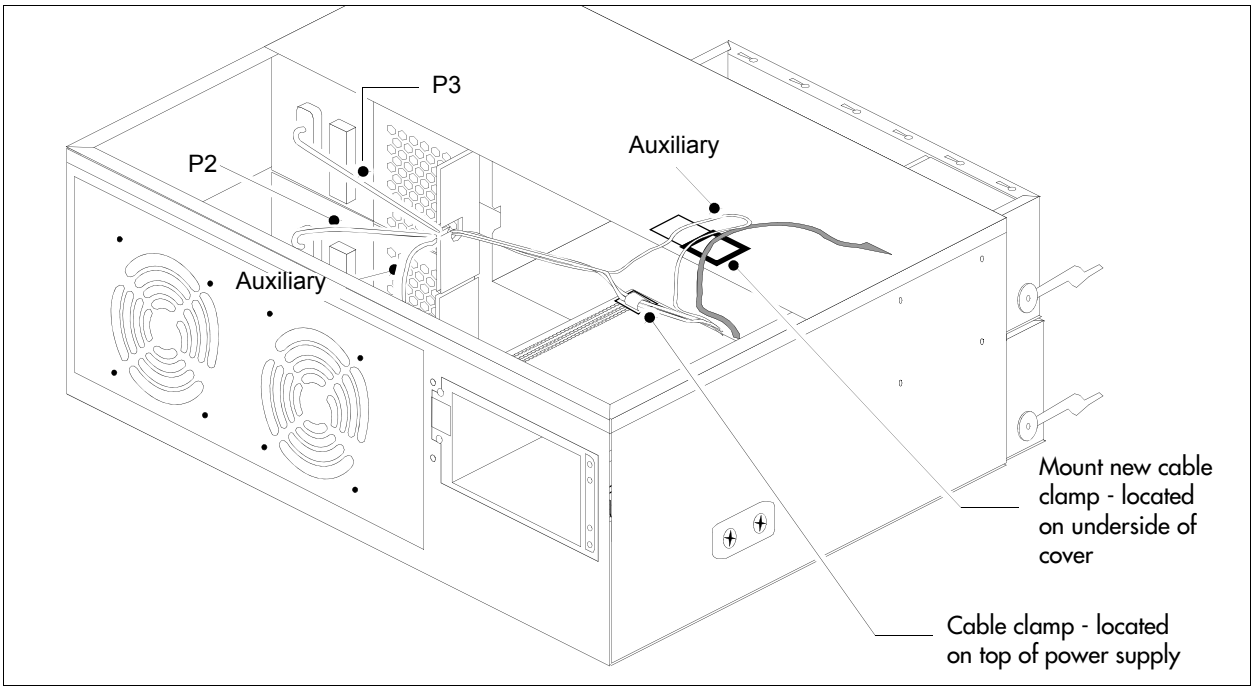

18 Run the power supply, auxiliary, and IDE cables to the hard disk. Secure these cables in the new cable clamp.

Note: Verify the power supply cables are connected correctly and are routed so they do not interfere with any internal components when moved.

19 Connect cable runs P2 and P3 to the media bay backplane (see Figure 153) as follows:

- **a** Bundle the cables together. Run the cables on the top of the power supply chassis and secure with the cable clamp.
- **b** Connect cable P2 into the bottom media bay module backplane power connector.
- **c** Connect cable P3 into the top media bay module backplane connector.
- **d** Bundle power cables P2 and P3 along with auxiliary cable (P7 or P8) together with a grommet (see Figure 154).
- **e** Insert the P2, P3, and auxiliary cable into the cable slot on the chassis (secured with the grommet).
- **f** Ensure that one power run connects to one MBM backplane connector. Do not connect a single power run to both MBM backplane connectors.

Figure 154 Install a cable grommet

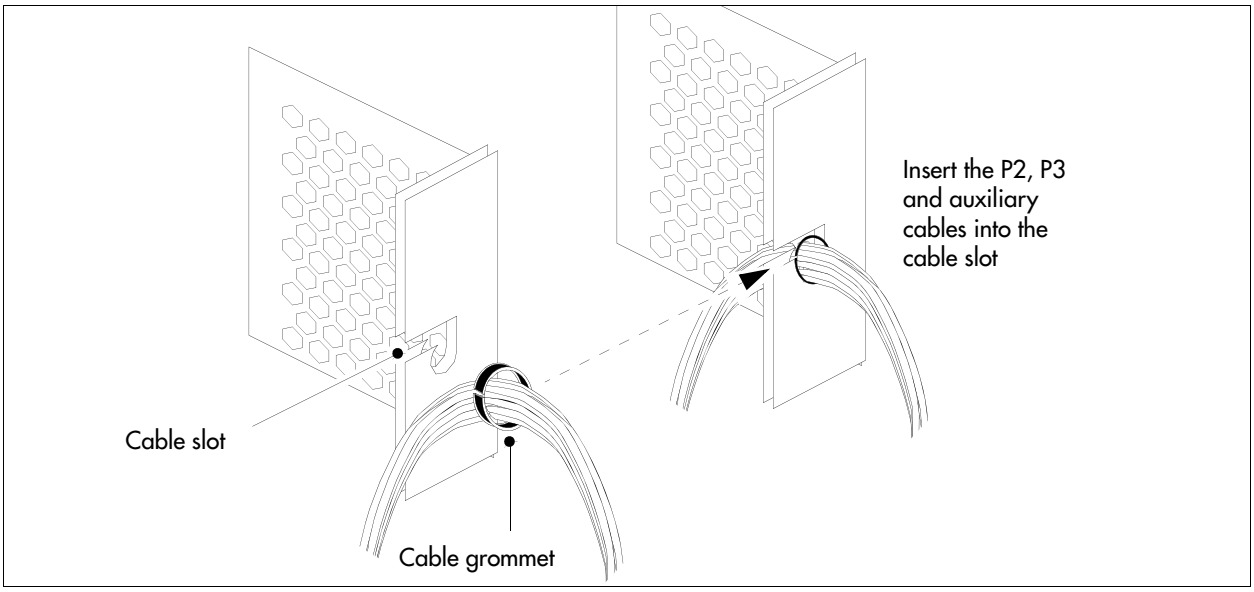

20 Install the main unit top cover. See "Installing the main unit top cover" on page 248.

Removing a BCM400 redundant power supply cage

Use this procedure to remove an existing redundant power supply cage from the BCM400 main unit.

Warning: Protect the hardware components against damage from electrostatic discharge. Always wear a grounded wrist strap before you handle components. Always place the components in a static-free container.

To remove a BCM400 redundant power supply cage

1. Set up the BCM400 for maintenance (see "Performing a system shutdown" on page 233).
2. Disconnect all cables from the front of the base function tray.
3. Disconnect the main unit and the expansion unit (if applicable), from the AC power connection.
4. Remove the top cover from the BCM400 main unit (see "Removing the main unit top cover" on page 246).
5. Attach one end of the grounding strap to your wrist and the other end to a grounded metal surface.
6. Remove the power supply modules (see "Removing a power supply module" on page 299).
7. Partially remove the power supply module from the power supply cage. Do not completely remove the power supply module.

Warning: When the power is on, wait several seconds before removing the power supply module completely from the power supply cage to ensure complete electrical discharge.

8 Disconnect the power supply cables from the I/O card, media bay backplane, and hard disk.

9 Unfasten the cable clamp that holds the power and IDE cables in place. The cable clamp is located under the top cover of the platform base chassis.

10 Run all cables to the rear exterior of the main unit.

11 Remove the four power supply chassis screws from the rear of the main unit (see Figure 155). Place the screws in a safe location.

Figure 155 Remove the BCM400 redundant power supply screws

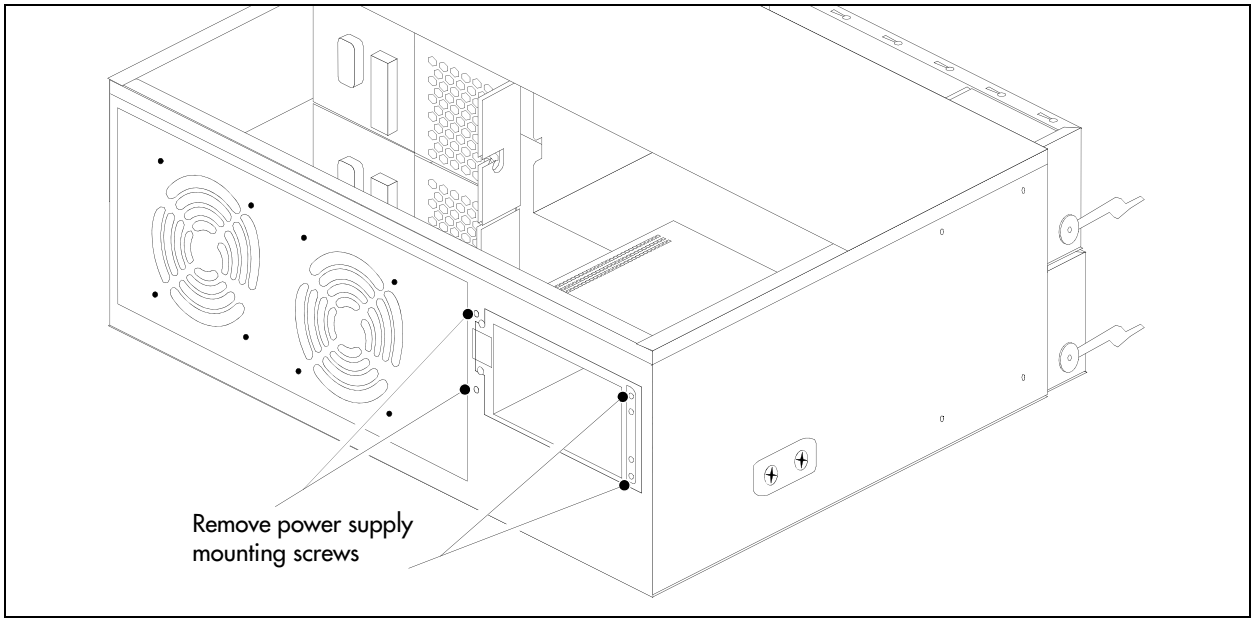

12 Unfasten the exterior and interior power supply support bracket mounting screws (see Figure 143). Place the screws in a safe location.

13 Remove the redundant power supply cage and support bracket out and away from the BCM400 main unit (see Figure 156). Place the power supply in a safe, clean, and static-free location.

Note: Remove the power supply carefully. Ensure the power supply cables are not entangled or connected to any internal components.

Figure 156 Remove the redundant power supply cage and support bracket

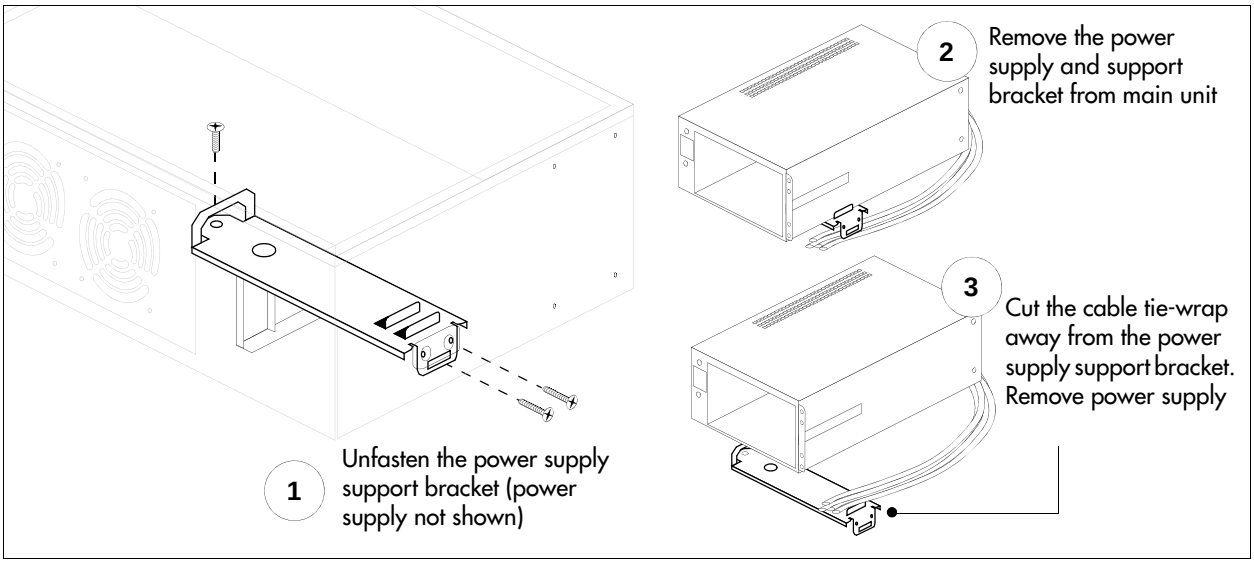

14 Cut the cable ties that hold the power cables to the power supply support bracket. Be careful not to cut or damage the cable insulation.

Installing a power supply module

This procedure describes how to install power supply modules in the power supply cage. After you install the redundant power supply cage in the main unit, insert the two power supply modules.

Use this procedure also to replace faulty power supply modules. Redundant power supply modules can be exchanged while the system is running, as long as one of the modules remains active. This section is relevant only with the BCM400 main unit.

Note: When you upgrade to a redundant power supply, you must also install a redundant fan. Refer to "Installing a BCM400 cooling fan" on page 328.

Warning: Protect the hardware components against damage from electrostatic discharge. Always wear a grounded wrist strap before you handle components. Always place the components in a static-free container.

To install a power supply module

1 Ensure you have the correct redundant power supply cage installed in the BCM400 main unit (see "Installing a redundant power supply cage (BCM400 only)" on page 290).

2 Ensure that you position the power supply modules correctly before inserting them into the power supply cage. The green LEDs are located at the top right of the power supply modules.

3 Insert the power supply modules into the redundant power supply cage at the rear of the main unit.

a Push on the power supply module until the face of the module is flush with the casing. You hear a click when the power supply module is properly seated.

b Secure each module with the power supply locking nut (located on the right side of the module). Refer to Figure 157.

Figure 157 Install the power supply modules into the power supply cage

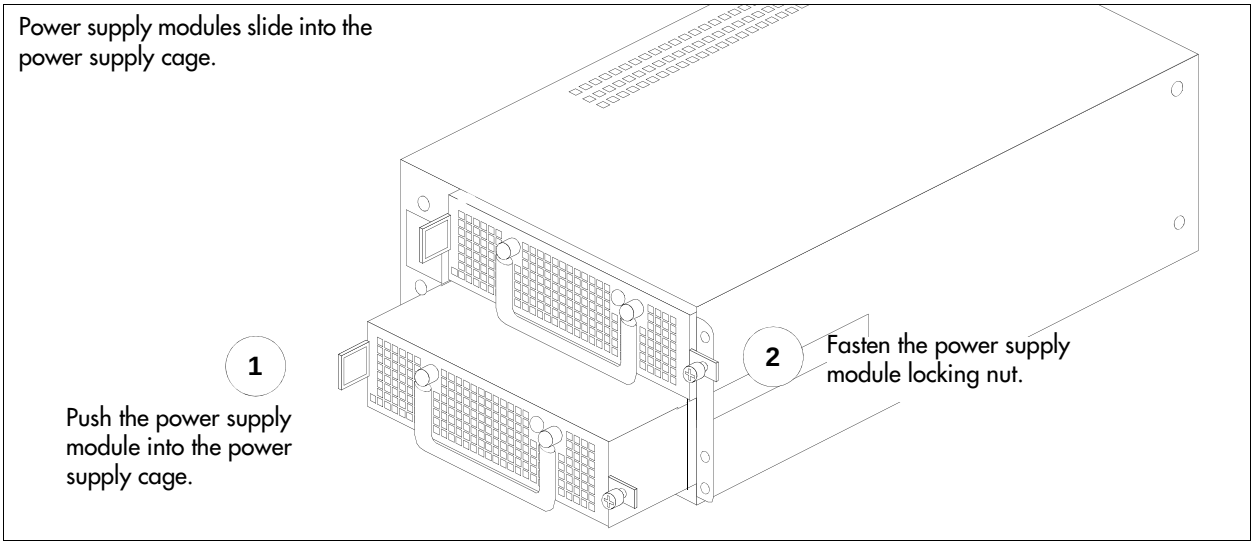

Figure 158 BCM400 main unit redundant power supply (rear view)

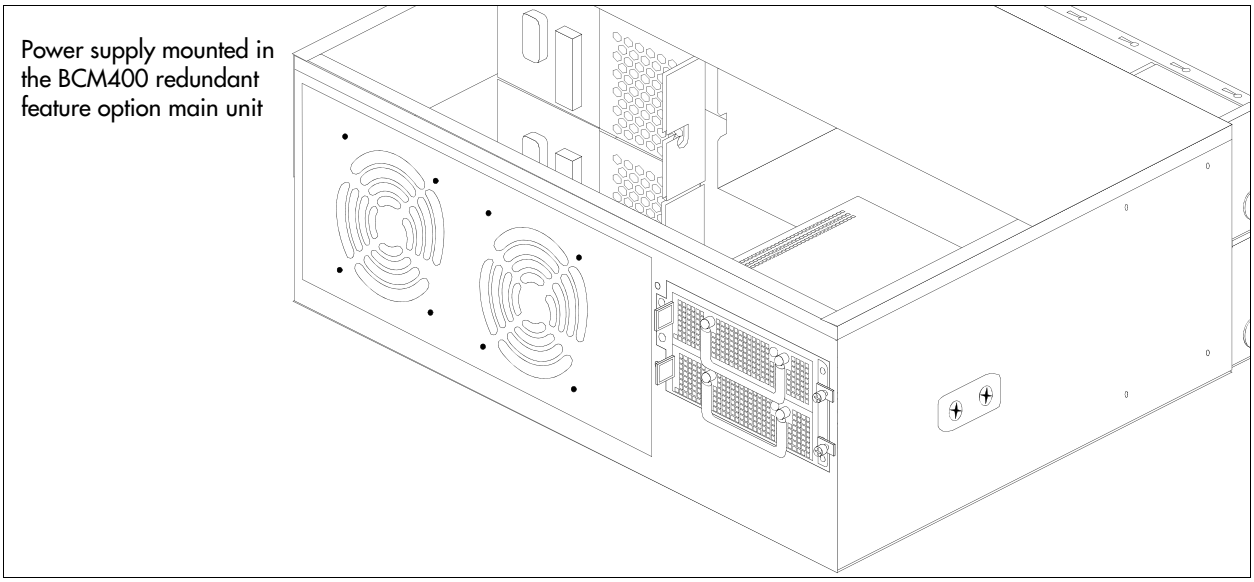

4 If you are installing the redundant power supply for the first time, restore the BCM400 system to operation as described in "Restarting the system after maintenance" on page 234.

The BCM400 system starts up when you connect the AC power cord. If the system does not start and the red Power LED is on, you may need to press the reset button on the base function tray panel to start the system.

If you are replacing a single faulty power supply module, the BCM400 is already in operation. The replacement power supply module powers up when fully and correctly inserted in the redundant power supply cage.

5 Verify the LEDs on the power supply module are lit. Verify all LEDs on the base function tray indicate the system functions correctly.

Removing a power supply module

Use this procedure for any of the following conditions:

- Remove a single failed power supply module. A power supply module indicates a failure when the green LED (located on the module) is not lit.
- Remove power supply modules before you install a new power supply cage in the BCM400 main unit (see "Upgrading to a redundant power supply" on page 288).

Note: It is not necessary to remove power from the BCM400 main unit or expansion unit to replace a single power supply module.

Warning: Protect the hardware components against damage from electrostatic discharge. Always wear a grounded wrist strap before you handle components. Always place the components in a static-free container.

To remove a power supply module

1 Unfasten the power supply module locking nut. When the nut is fully unfastened, the nut should move freely in the screw cage.

2 Swing the power supply module handle to a 90 degree angle to the power supply module.

3 Grasp the power supply module handle. With your thumb, compress the locking tab toward the handle.

4 Pull the power supply module out of the power supply cage (see notes in this step).

- If you are replacing a faulty power supply module, power down the power supply module. Partially remove the power supply module from the power supply cage. Do not completely remove the power supply module.

Warning: When the power is on, wait several seconds before removing the power supply module completely from the power supply cage to ensure complete electrical discharge.

- If you are installing the redundant power supply for the first time, remove both power supply modules from the redundant power supply cage. Remove the power supply modules before you install the power supply in the platform base chassis (see Figure 159).

Figure 159 Remove the power supply module from the power supply cage

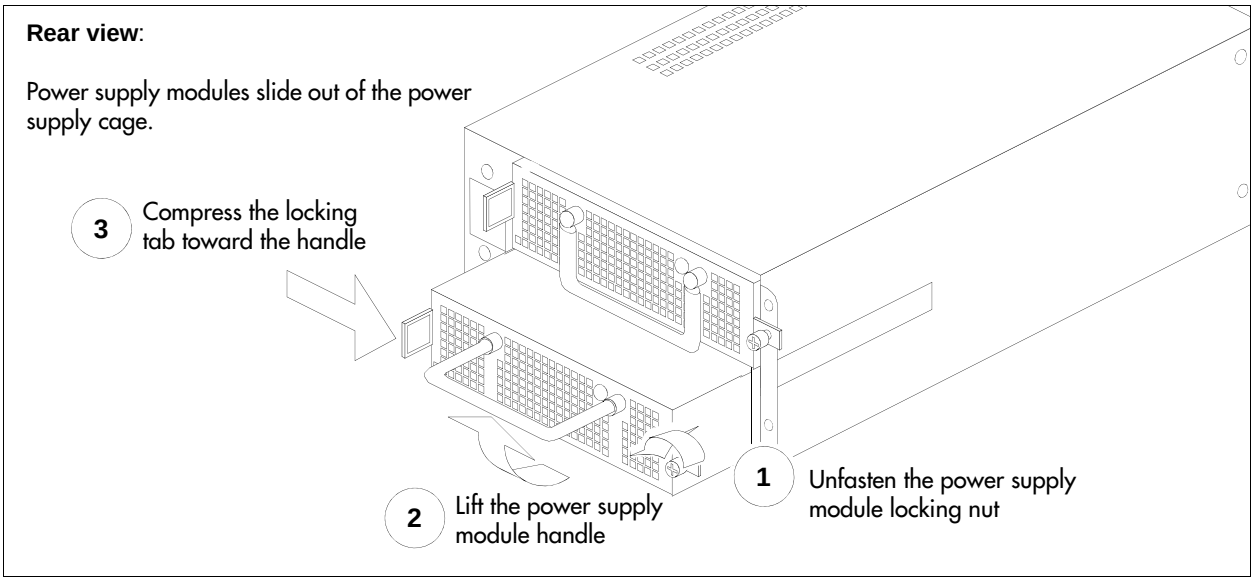

5 Place the power supply module on a flat, clean, static-free surface.

6 Repeat this step for any remaining power supply modules.

Chapter 24
Replacing data cards and processing hardware

This section describes how to replace data cards and processing hardware components and provides the following topics:

- "Replacing cards" on page 301
- "Replacing the processor expansion card (PEC)" on page 313
- "Replacing memory" on page 317
- "Replacing the clock/calendar battery" on page 320

Warning: You must remove all of the connections to the BCM system before you power the system down. Failure to disconnect lines before you power down the system can cause damage to the system.

Warning: Protect the hardware components against damage from electrostatic discharge. Always wear a grounded wrist strap before you handle components. Always place the components in a static-free container.

The following are field replaceable units (FRUs) for the BCM200 and BCM400 systems:

- Base function tray
- Cards (WAN, MSC, modem)
- Memory
- PECs
- Main card CMOS battery

Replacing cards

Use the procedures in this section to perform the following:

- "To remove the WAN card" on page 303
- "To install a replacement WAN card" on page 305
- "To remove the media services card (MSC)" on page 306
- "To install the media services card (MSC)" on page 308
- "To remove the modem card" on page 309
- "To install a modem card" on page 311
- "To remove the processor expansion card (PEC)" on page 315
- "To install a PEC" on page 317

- "To remove a DIMM card" on page 319
- "To install a DIMM card" on page 320
- "To remove the clock/calendar battery" on page 321
- "To install a new clock/calendar battery" on page 323

Danger: Electrical shock warning.
Disconnect the power cord, telephone cables, and network cables before opening the computer. Read and follow installation instructions carefully.

Caution: Use only a Nortel-approved replacement. Contact your account representative for the current list of approved replacement parts.

Figure 160 shows an interior view of the base function tray (looking forward). The illustration identifies the location of interior components. Use the flowchart shown in Figure 161 to replace the cards.

Figure 160 Base function tray interior components

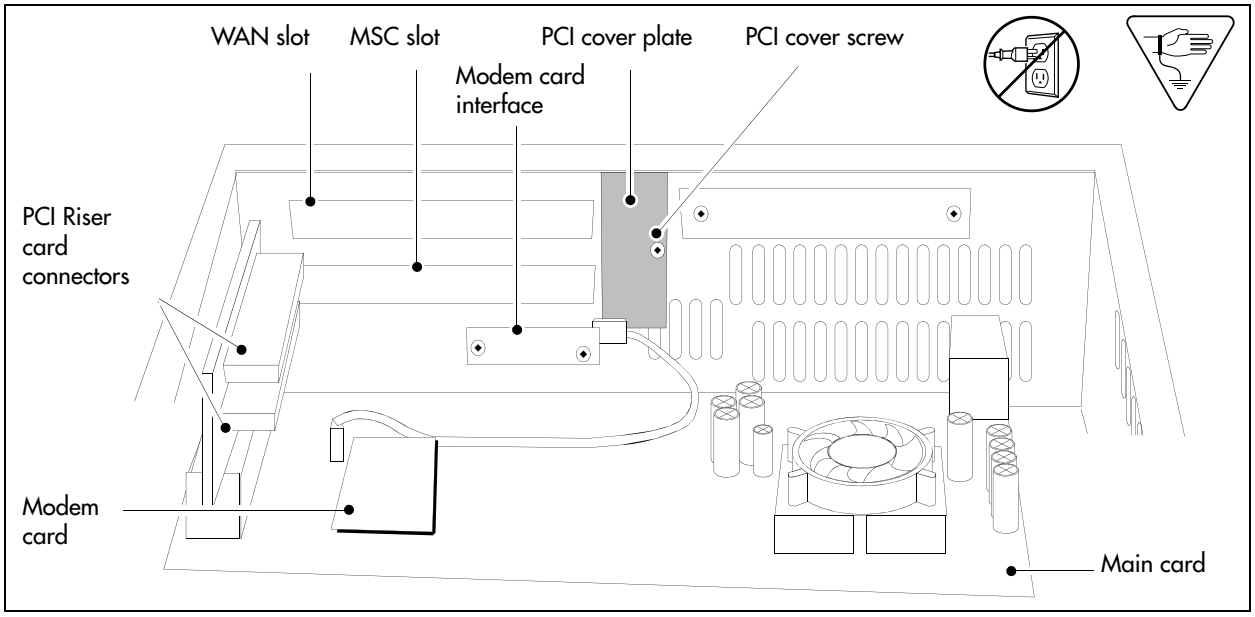

Figure 161 Card replacement overview

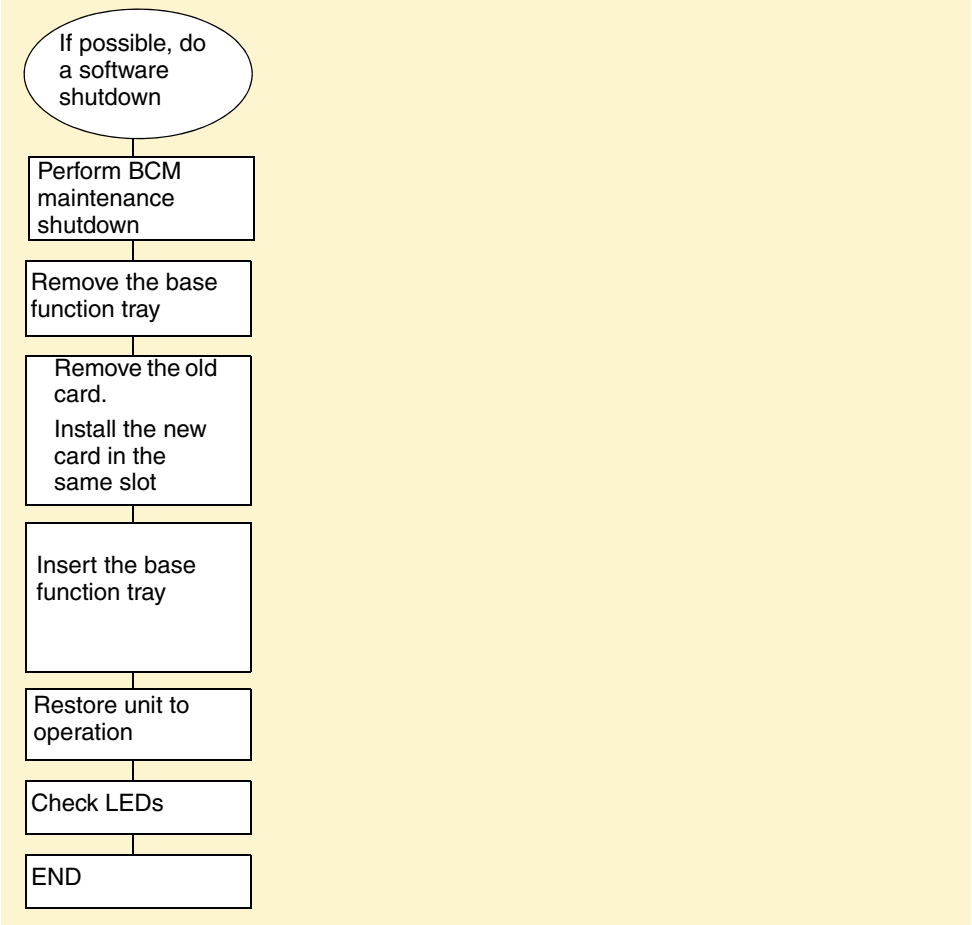

To remove the WAN card

Warning: Protect the hardware components against damage from electrostatic discharge. Always wear a grounded wrist strap before you handle components. Always place the components in a static-free container.

1. Shut down the system (see "Performing a system shutdown" on page 233).
2. Disconnect the BCM system from the AC power outlet.
3. Disconnect any connectors from the front of the base function tray.
4. Remove the main unit top cover. Refer to "Removing the main unit top cover" on page 246.
5. Attach one end of the grounding strap to your wrist and the other end to a grounded metal surface.

6 Partially remove the base function tray from the main unit. Ensure you do not pinch, stretch, or damage any cables. If required, remove the base function tray completely from the main unit (see "Removing the base function tray" on page 236).

7 Remove the base function tray bezel. See "To remove the base function tray bezel" on page 239.

8 At the front of the base function tray, loosen and remove the PCI cover plate screw (use a #2 Phillips screwdriver). Figure 162 shows an interior view of the base function tray. Place the screw in a safe location.

9 Remove the PCI cover plate from the base function tray. Place the PCI cover plate in a safe location.

10 Use both hands to carefully hold the WAN card along the side edges. Push the WAN card away from the PCI riser card connector.

Figure 162 Remove the WAN card and PCI cover plate

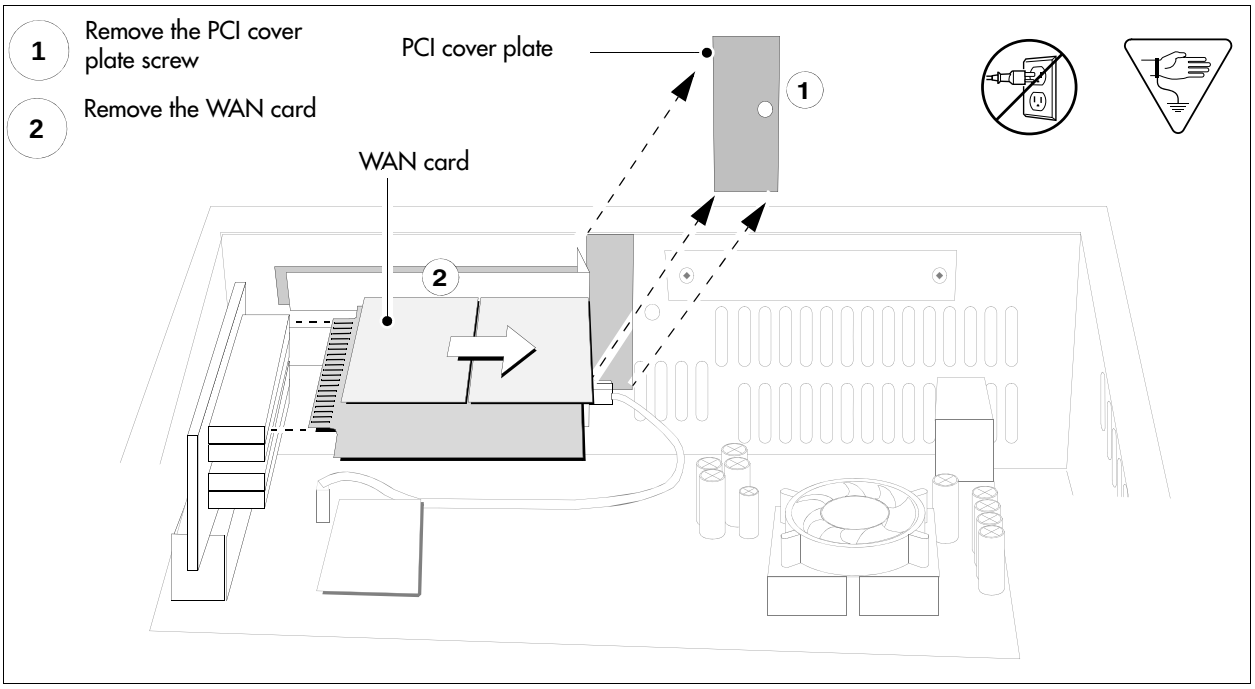

11 Remove the WAN card from the base function tray. Place the card in a safe, static-free, and clean location or container.

Installing the WAN card

Use this procedure to install a replacement WAN card.

Warning: Protect the hardware components against damage from electrostatic discharge. Always wear a grounded wrist strap before you handle components. Always place the components in a static-free container.

To install a replacement WAN card

1 Disconnect the BCM system from the AC power outlet.

2 Partially remove the base function tray from the main unit. If required, remove the base function tray completely from the main unit (see "Removing the base function tray" on page 236).

3 Remove the base function tray bezel (if applicable).

4 Insert the WAN card in the same PCI slot from which you removed the original card. Refer to Figure 163.

5 Push firmly on the WAN card until it sits completely in the top PCI riser card connector.

6 Position the PCI cover plate on the front of the base function tray so that the base function tray and cover plate screw holes align.

7 Position the PCI cover plate locking screw in the PCI cover plate. Tighten the PCI cover plate locking screw until the plate is firmly set in place (see Figure 163).

Figure 163 Install the WAN card

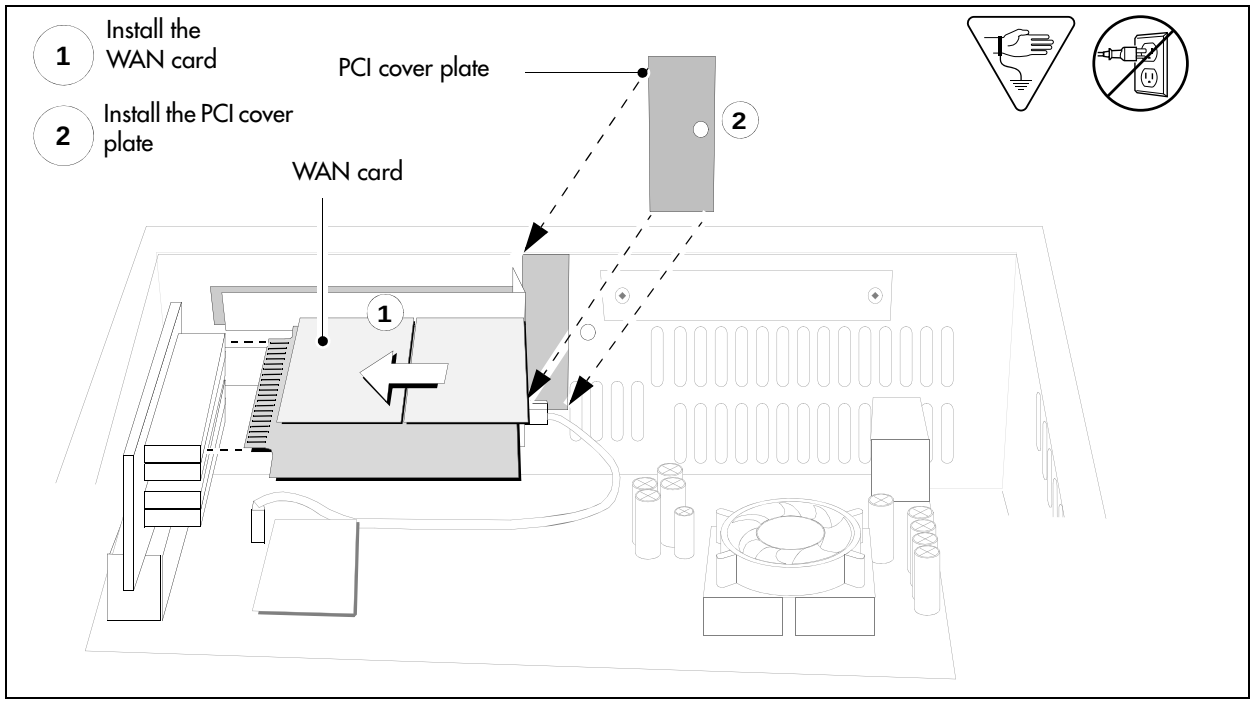

8 Partially insert the base function tray in the main unit (see "To install the base function tray" on page 238). Ensure you do not pinch or damage any cables.

9 Install the base function tray bezel. See "To install the base function tray bezel" on page 240.

10 Move the base function tray latches to the locked position and install the latch screws.

11 Insert all connectors in the correct locations on the base function tray face.

12 Restore the BCM system to operation. For details, refer to "Restarting the system after maintenance" on page 234.

The BCM system automatically initializes the new WAN card. You can configure the WAN card to meet the needs of your system (in Element Manager: **Configuration > Resources > Network Interfaces**).

To remove the media services card (MSC)

Warning: Protect the hardware components against damage from electrostatic discharge. Always wear a grounded wrist strap before you handle components. Always place the components in a static-free container.

Note: If you purchased optional BCM applications that require keycode activation, regenerate the keycodes after you install the replacement MSC. For further information, see "Software keycode" on page 184 and "To install the media services card (MSC)" on page 308.

Note: If you need to install a new MSC, you must upload new core software from the hard disk. See "To install the media services card (MSC)" on page 308.

1. Ensure you have a current data backup of your system (see "Using the backup and restore utility" on page 250).
2. Shut down the system (see "Performing a system shutdown" on page 233).
3. Disconnect the BCM system from the AC power outlet.
4. Disconnect any cables from the front of the base function tray.
5. Attach one end of the grounding strap to your wrist and the other end to a grounded metal surface.
6. Partially remove the base function tray from the main unit (see "Removing the base function tray" on page 236). Do not exert force on the DS30 cables and connectors.
7. Disconnect the DS30 cables from the MSC.
8. Remove the base function tray completely from the main unit. Ensure you do not pinch or damage any cables (see "Removing the base function tray" on page 236). Place the base function tray on a flat, clean, and static-free surface.
9. Remove the base function tray bezel. See "To remove the base function tray bezel" on page 239.
10. At the front of the base function tray, loosen and remove the PCI cover plate screw (use a #2 Phillips screwdriver). Figure 162 shows an interior view of the base function tray. Place the screw in a safe location.
11. Remove the PCI cover plate from the base function tray. Place the PCI cover plate in a safe location.
12. Remove the two mounting screws that secure the MSC to the base function tray extension at the rear of the MSC (see Figure 164). Place the screws in a safe location.

Figure 164 MSC mounting screws

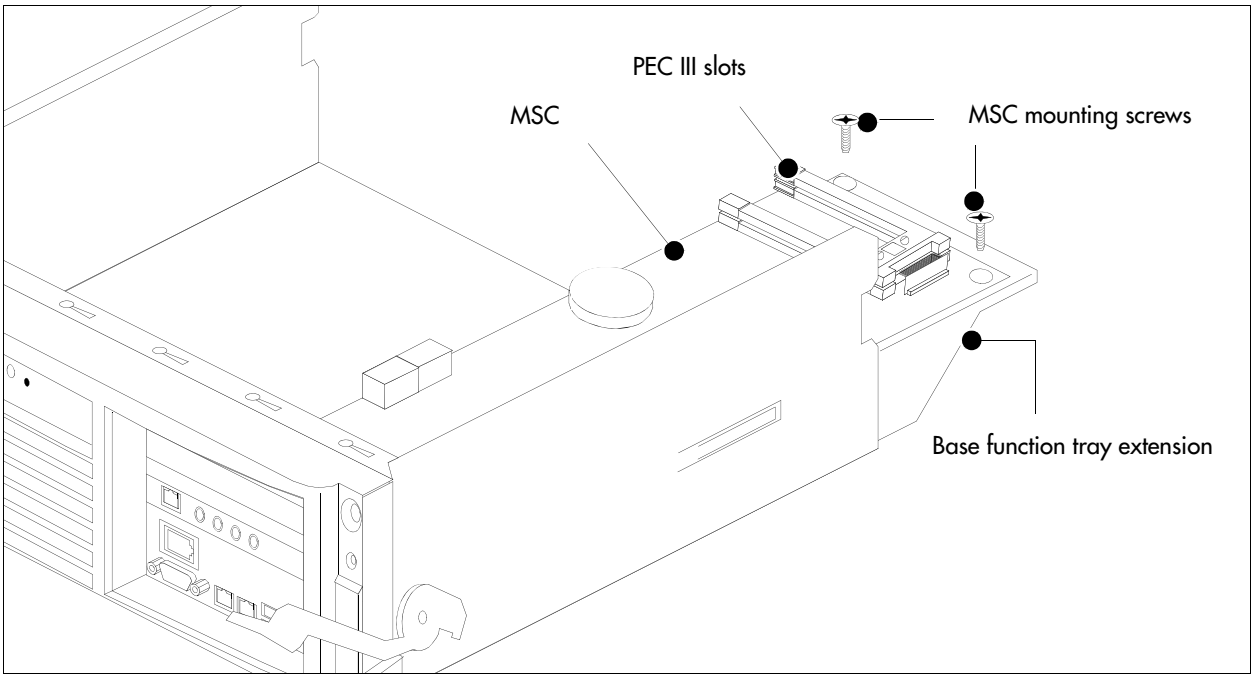

13 Use both hands to carefully hold the card along the side edges. Push the card away from the PCI riser card connector to disconnect the MSC.

14 Remove the MSC from the base function tray. Place the MSC on a flat, clean, and static-free surface.

15 Remove all processor expansion cards (PEC IIIs) from the MSC (see the procedure "To remove the processor expansion card (PEC)" on page 315). Place the PEC IIIs in a safe, static-free location. Reuse the cards in a replacement MSC (see the procedure "To install the media services card (MSC)" on page 308).

To install the media services card (MSC)

Warning: Protect the hardware components against damage from electrostatic discharge. Always wear a grounded wrist strap before you handle components. Always place the components in a static-free container.

Note: If you purchased optional BCM applications that require keycode activation, regenerate the keycodes after you install the replacement MSC. For further information, see "Software keycode" on page 184.

Note: If you need to install a new MSC, you must upload core software from the hard disk. If you reinstall the same MSC, the core software on the MSC is the most current version and no core software upload is necessary.

1. Disconnect the BCM system from the wall power outlet.
2. Attach one end of the grounding strap to your wrist and the other end to a grounded metal surface.
3. Install the processor expansion cards (PEC IIIs) in the MSC. Refer to the procedure "Installing a processor expansion card (PEC)" on page 316.
4. Position the MSC in the correct PCI riser card connector.
5. Push the card firmly and fully into the PCI riser card connector. Ensure the lanclet tab on the MSC PCI bracket aligns correctly with the lanclet slot on the base function tray.
6. Install the two mounting screws at the rear of the MSC (see Figure 164).
7. Position the PCI cover plate on the front of the base function tray so that the base function tray and cover plate screw holes align.
8. Position the PCI cover plate locking screw in the PCI cover plate. Tighten the PCI cover plate locking screw until the plate is firmly set in place (see Figure 163).
9. Install the base function tray bezel. See "To install the base function tray bezel" on page 240.
10. Partially install the base function tray in the main unit.
11. Connect the DS30 connectors to the MSC.
12. Install the base function tray completely into the main unit. Be careful not to crimp the DS30 cables (see "To install the base function tray" on page 238).
13. Insert all connectors in the correct locations on the base function tray face.
14. Restore the BCM system to operation. For details, refer to "Restarting the system after maintenance" on page 234.

Note: If the MSC is new, upload the core software from the hard disk to the MSC. If you removed and reinstalled the same MSC (for example, to replace the battery on the main card), you do not need to upload core software from the hard disk.

15 Ensure the Status LED on the BCM main unit is lit.

16 Access the BCM system (see "Initializing the system" on page 179).

17 Restore your telephony data from your backup data using the backup and restore utility (see "Using the backup and restore utility" on page 250).

18 Restore your BCM application keycodes if applicable. The step applies only if you installed a new MSC (see "Software keycode" on page 184).

To remove the modem card

Warning: Protect the hardware components against damage from electrostatic discharge. Always wear a grounded wrist strap before you handle components. Always place the components in a static-free container.

1 Shut down the system (see "Performing a system shutdown" on page 233).

2 Disconnect the BCM system from the AC power outlet.

3 Attach one end of the grounding strap to your wrist and the other end to a grounded metal surface.

4 Remove the top cover of the main unit (see "Removing the main unit top cover" on page 246).

5 Disconnect any connectors from the front of the base function tray.

6 Partially remove the base function tray from the main unit (See "Removing the base function tray" on page 236). Do not exert force on the DS30 cables and connectors. Ensure you do not pinch, stretch, or damage any cables.

7 Disconnect the DS30 cables from the MSC.

8 Remove the base function tray completely from the main unit. Ensure you do not pinch, stretch, or damage any cables (see "Removing the base function tray" on page 236). Place the base function tray on a flat, clean, and static-free surface.

9 Remove the base function tray bezel. See "To remove the base function tray bezel" on page 239.

10 Loosen and remove the PCI cover plate screw using a #2 Phillips screwdriver (see Figure 162). Place the PCI cover plate screw in a safe location.

11 Remove the PCI cover plate from the base function tray (see Figure 162 on page 304). Place the PCI cover plate in a safe location.

12 Remove the WAN card if applicable (see "To remove the WAN card" on page 303).

13 Remove the MSC (see "To remove the media services card (MSC)" on page 306).

14 Locate the modem card on the main card (see Figure 166 on page 310).

15 Compress the locking clip at the tip of the modem guide pin (see Figure 165).

Figure 165 Modem card (pin locking clip)

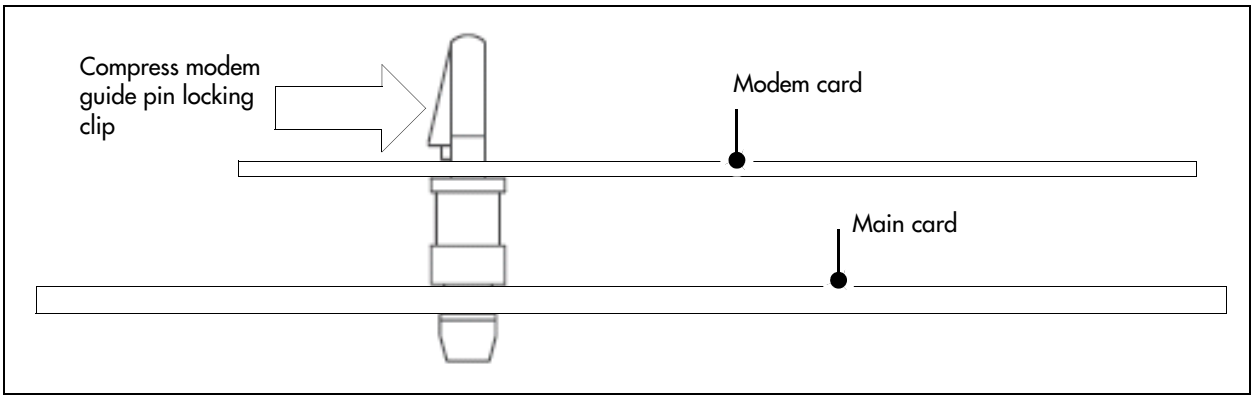

16 Grasp the modem card edges with your fingertips. Carefully pull the modem card away from the main card. Place the modem card in a clean, safe, and static-free location.

17 Disconnect the modem cable from the main card and RJ-11 interface.

18 Unfasten the modem RJ-11 interface screws. Place the screws in a safe location.

Figure 166 Modem card (positioning)

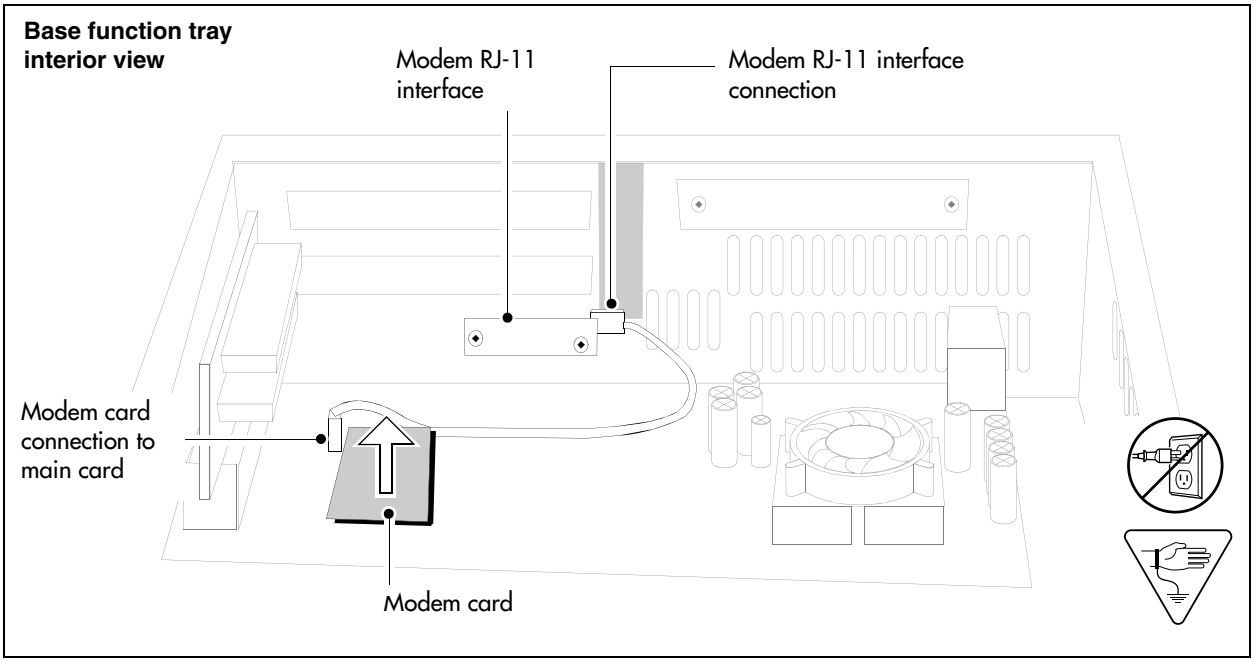

19 Unfasten the modem RJ-11 interface mounting screws. Place the screws in a safe location.

20 Remove the modem RJ-11 interface from the base function tray.

21 Carefully grasp the modem card guide pin and remove it. Place the pin in a safe location.

22 Remove the modem card.

Installing the modem card

Use this procedure to install a modem card in a base function tray. This procedure assumes the base function tray is not installed in the main unit.

Note: Before you power down the system to remove the base function tray, confirm that the CallPilot region of operation information is correct:

1. From the **Configuration** tab, click the **System** folder to expand it.
2. Select **Identification**.

   The System Identification screen appears.
3. Verify that the region setting is correct for your system.

   If you must change the region, see "Using Element Manager to set the basic parameters" on page 195.

Warning: Protect the hardware components against damage from electrostatic discharge. Always wear a grounded wrist strap before you handle components. Always place the components in a static-free container.

To install a modem card

1. Obtain a correct and functional modem kit.
2. Attach one end of the grounding strap to your wrist and the other end to a grounded metal surface.
3. Remove the base function tray bezel. See "To remove the base function tray bezel" on page 239.
4. If required, remove the WAN card. See "To remove the WAN card" on page 303.
5. If required, remove the MSC card from the base function tray. See "To remove the media services card (MSC)" on page 306.
6. If you are installing the modem card for the first time, locate the modem port label on the front of the base function tray. Remove the modem port label if required and discard (see Figure 167).

Figure 167 Modem port label

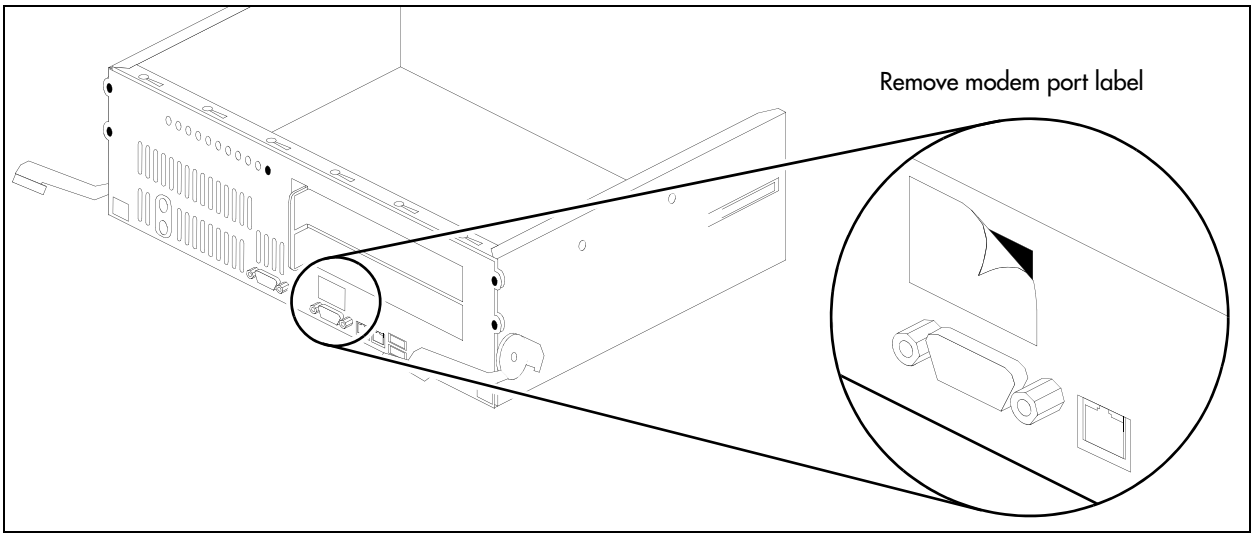

7 If applicable, install the modem card guide pin on the main card. Ensure the modem card guide pin aligns with the correct opening on the main card (see Figure 168).

Figure 168 Modem card guide pin installation

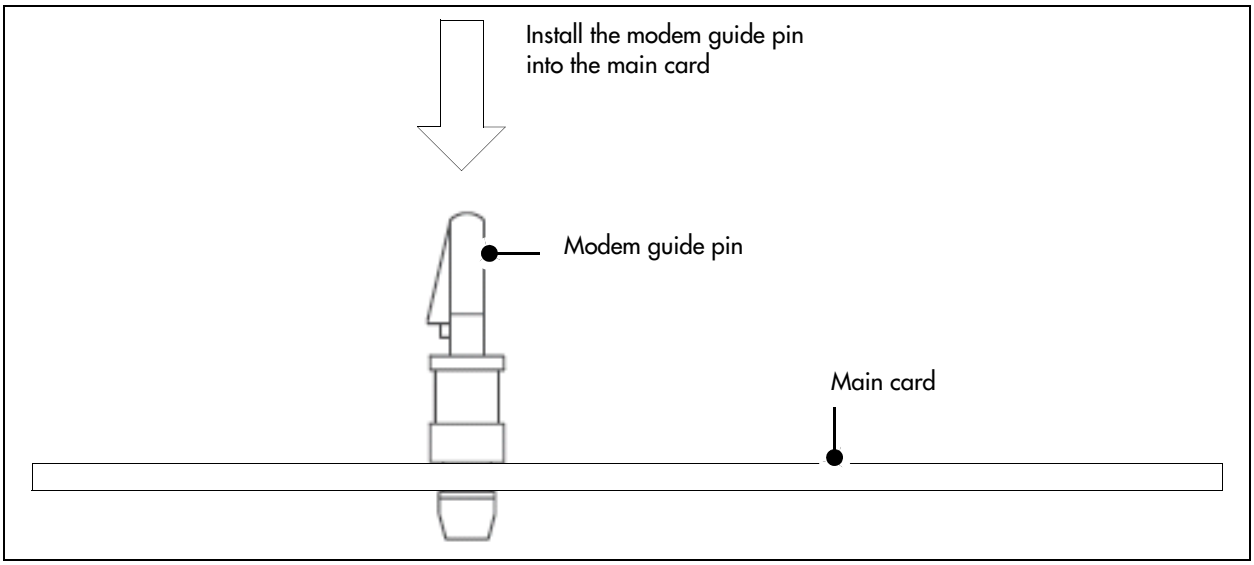

8 Carefully grasp the modem card with your fingertips.

9 Install the modem card in the correct location on the main card. Ensure the modem card pins correctly align with the main card modem connectors and modem guide pin.

10 Gently push in a downward direction on the modem card with your fingertips. Ensure the modem card seats correctly in the main card modem connectors.

11 If applicable, install the modem RJ-11 interface to the base function tray faceplate. Ensure the modem RJ-11 interface connector is on the right side (as shown in Figure 166).

12 If applicable, connect the RJ-11 modem card connector to the main card socket and the RJ-11 interface (see Figure 166).

13 Install the MSC in the correct PCI riser card connector. See "To install the media services card (MSC)" on page 308.

14 Install the two mounting screws that secure the MSC to the base function tray extension (at the rear of the MSC). See Figure 164.

15 Position the WAN card (if applicable) in the top PCI riser card connector. See "Installing the WAN card" on page 304.

16 Partially install the base function tray in the main unit.

17 Connect the DS30 connectors to the MSC.

18 Position the PCI cover plate on the front of the base function tray so that the base function tray and cover plate screw holes align.

19 Position the PCI cover plate locking screw in the PCI cover plate. Tighten the PCI cover plate locking screw until the plate is firmly set in place (see Figure 163).

20 Push the base function tray completely into the main unit (see "To install the base function tray" on page 238). Ensure you do not pinch or damage any cables.

21 Restore the BCM system to operation. For details, refer to "Restarting the system after maintenance" on page 234.

22 Reinitialize your system.

Replacing the processor expansion card (PEC)

This section describes how to replace the processor expansion card (PEC) in the BCM200 and BCM400 main units. This section contains the following procedures:

- "To remove the processor expansion card (PEC)" on page 315
- "Installing a processor expansion card (PEC)" on page 316
- "Removing the dual in-line memory module (DIMM) card" on page 318

The BCM200 is equipped with one PEC III mounted on the media services card (MSC). The BCM400 is equipped with two PEC IIIs mounted on the MSC. The PECs provide signal processing capabilities for such applications as voice mail and IP telephony applications.

Figure 169 provides an overview of the process for replacing a PEC.

Figure 169 PEC replacement overview

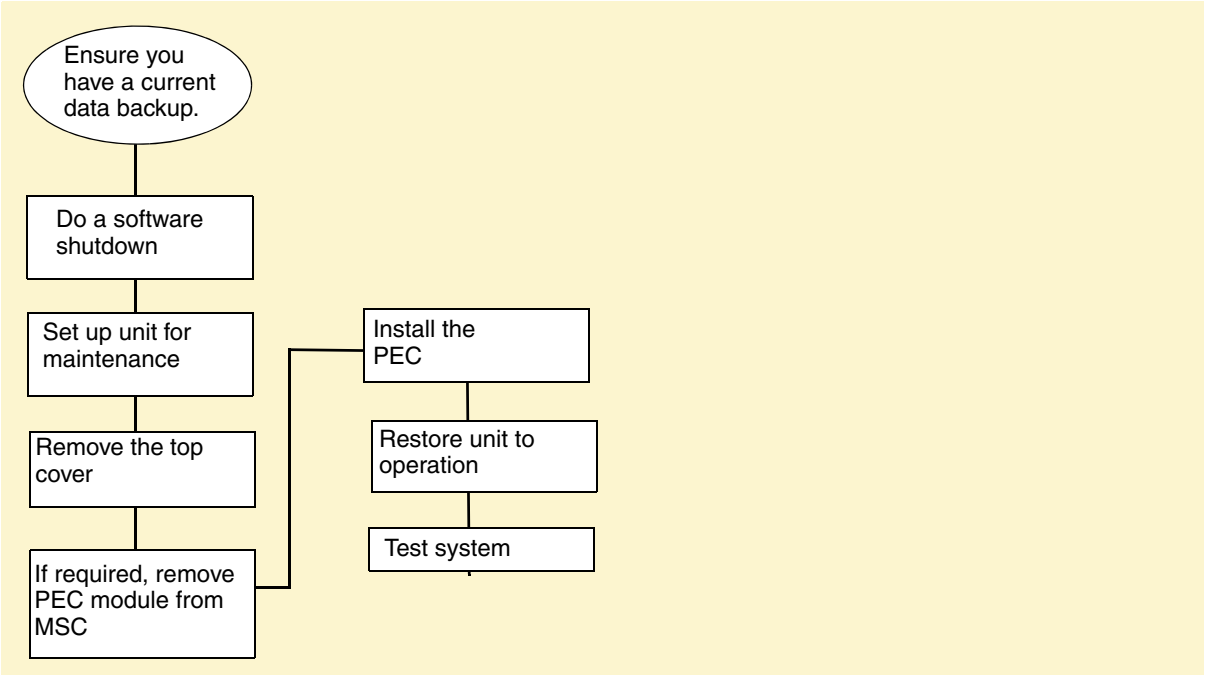

Warning:

Incorrect handling of the PEC during installation could result in loss of telephony programming.

Danger: Electrical shock warning
Disconnect the power cord, telephone cables, and network cables before opening the computer. Read and follow installation instructions carefully.

Caution: Use only a Nortel-approved replacement. Contact your account representative for the current list of approved replacement parts.

To remove the processor expansion card (PEC)

Warning: Possible data loss

Ensure that you do not touch the PEC casing to any of the components on the MSC. This may cause shorting, which can erase memory or cause a loss of telephony programming.

If a loss of memory or telephony programming occurs, complete the removal of the PEC, and then restore the data from your backup medium upon reinstallation (see "Installing a processor expansion card (PEC)" on page 316).

Warning: Protect the hardware components against damage from electrostatic discharge. Always wear a grounded wrist strap before you handle components. Always place the components in a static-free container.

1. Ensure you have a current data backup of your system (see "Using the backup and restore utility" on page 250).
2. Shut down the system (see "Performing a system shutdown" on page 233).
3. Disconnect the BCM system from the AC power outlet.
4. Attach one end of the grounding strap to your wrist and the other end to a grounded metal surface.
5. Completely remove the base function tray from the main unit (see "Removing the base function tray" on page 236). Ensure you do not pinch, stretch, or damage any cables.
6. Grasp the top edge of the PEC you want to remove and it pull out. Place the PEC in a safe and static-free container. Refer to Figure 170.

Figure 170 Remove the processor expansion card (PEC III)

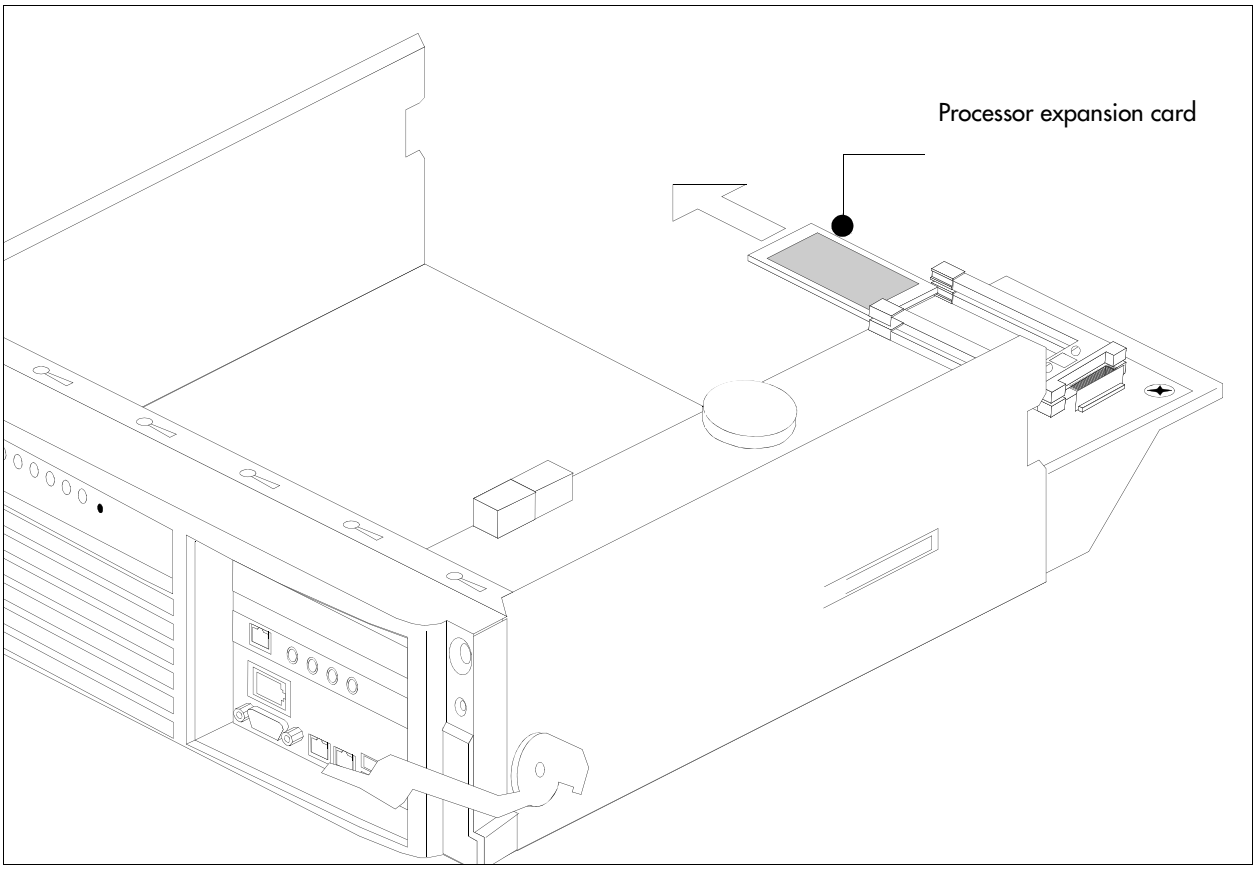

Installing a processor expansion card (PEC)

When you replace or add PECs, ensure you follow the directions for shutting down the system. Ensure you have a current data backup of your system. This procedure assumes the base function tray is completely removed from the main unit.

Warning: Possible data loss

Ensure that you do not touch the PEC casing to any of the components on the MSC. This may cause shorting, which can erase memory or cause a loss of telephony programming.

If this occurs, complete the installation of the PEC, and then restore the data from your backup medium.

Warning: Protect the hardware components against damage from electrostatic discharge. Always wear a grounded wrist strap before you handle components. Always place the components in a static-free container.

To install a PEC

1 Disconnect the BCM system from the AC power outlet.

2 Attach one end of the grounding strap to your wrist and the other end to a grounded metal surface.

3 Decide which slot you are going to install the PEC into on the MSC. If you have more than one card holder (BCM400), completely populate one card holder at a time.

4 Line the card up between the rails of the slot. Ensure the card label is face-up.

5 Carefully slide the PEC into the slot until it is firmly seated (see Figure 171 on page 317).

Note: Do not force the card into its slot. If the PEC does not slide in easily, check the alignment.

Figure 171 Insert the processor expansion card (PEC III)

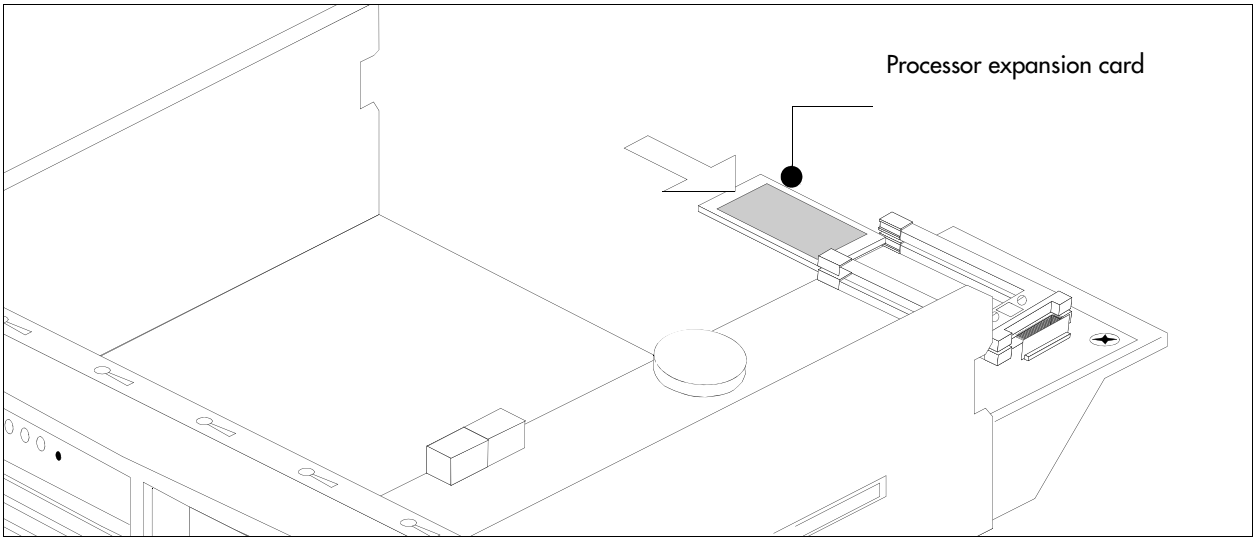

6 Completely insert the base function tray into the main unit (see "To install the base function tray" on page 238).

7 Restore the BCM system to operation. Refer to "Restarting the system after maintenance" on page 234.

Replacing memory

This section describes how to remove and install the random access memory card. This section contains the following procedures:

- "Removing the dual in-line memory module (DIMM) card" on page 318
- "To install a DIMM card" on page 320

The BCM system is equipped with 256 MB of random access memory (RAM). The memory resides on a dual in-line memory module (DIMM) on the main card. The main card contains space to add a second DIMM, or you can upgrade the existing DIMM.

Figure 172 provides an overview of the process for replacing or adding memory chips.

Figure 172 Memory replacement overview

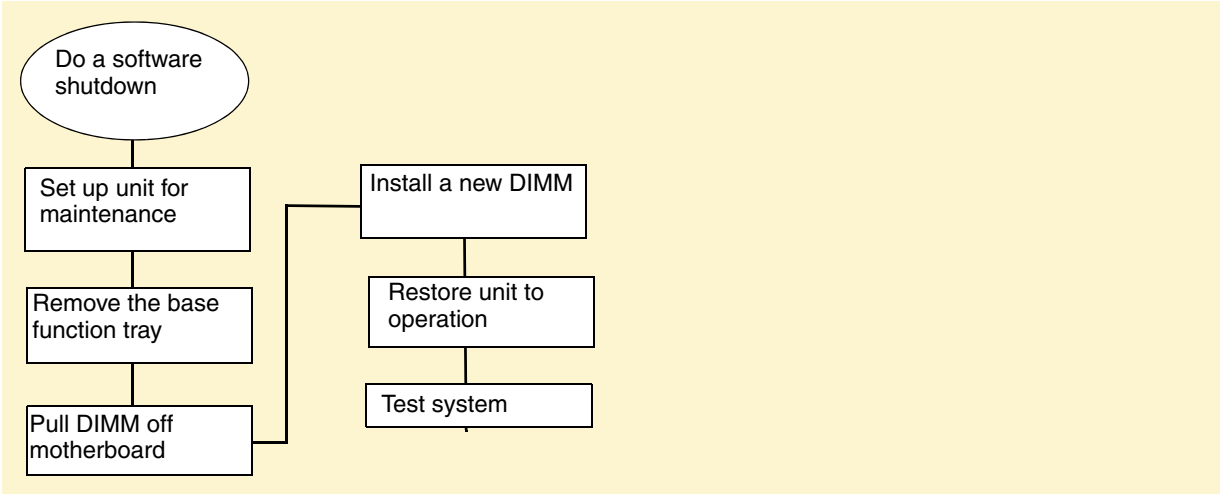

Danger: Risk of shock
Disconnect the power cord, telephone cables, and network cables before opening the computer. Read and follow installation instructions carefully.

Caution: Use only a Nortel-approved replacement. Contact your account representative for the current list of approved replacement parts.

Increasing the amount of memory

To increase the amount of memory in the system, you can:

- add another DIMM to the second DIMM slot.
- replace current DIMM with a DIMM that contains more RAM.

Removing the dual in-line memory module (DIMM) card

Use this procedure to remove a DIMM when the circuit fails or when you want to increase the amount of RAM in the BCM main unit.

Note: There must be at least one DIMM installed in the BCM main unit for the system to function.

Warning: Protect the hardware components against damage from electrostatic discharge. Always wear a grounded wrist strap before you handle components. Always place the components in a static-free container.

To remove a DIMM card

1. Shut down the system (see "Performing a system shutdown" on page 233).
2. Disconnect the BCM system from the AC power outlet.
3. Disconnect any connectors from the front of the base function tray.
4. Remove the main unit cover. See "Removing the main unit top cover" on page 246.
5. Attach one end of the grounding strap to your wrist and the other end to a grounded metal surface.
6. Partially remove the base function tray from the main unit. Ensure you do not pinch, stretch, or damage any cables.
7. Remove the base function tray bezel. See "To remove the base function tray bezel" on page 239.
8. Remove the WAN card (if applicable). See "To remove the WAN card" on page 303.
9. Detach the DS30 cable connectors from the MSC.
10. Remove the base function tray completely from the main unit. Ensure you do not pinch, stretch, or damage any cables. See "Removing the base function tray" on page 236.
11. Remove the media services card (see "To remove the media services card (MSC)" on page 306).
12. Carefully push down on the fastening tabs on either side of the DIMM you want to remove. As you press down on the fastening tabs, the DIMM lifts out of the DIMM slot.
13. Grasp both ends of the DIMM with your fingertips. Lift the DIMM up and away from the DIMM slot (see Figure 173 on page 319). Place the DIMM in a static-free container.

Figure 173 Remove and replace the dual in-line memory module

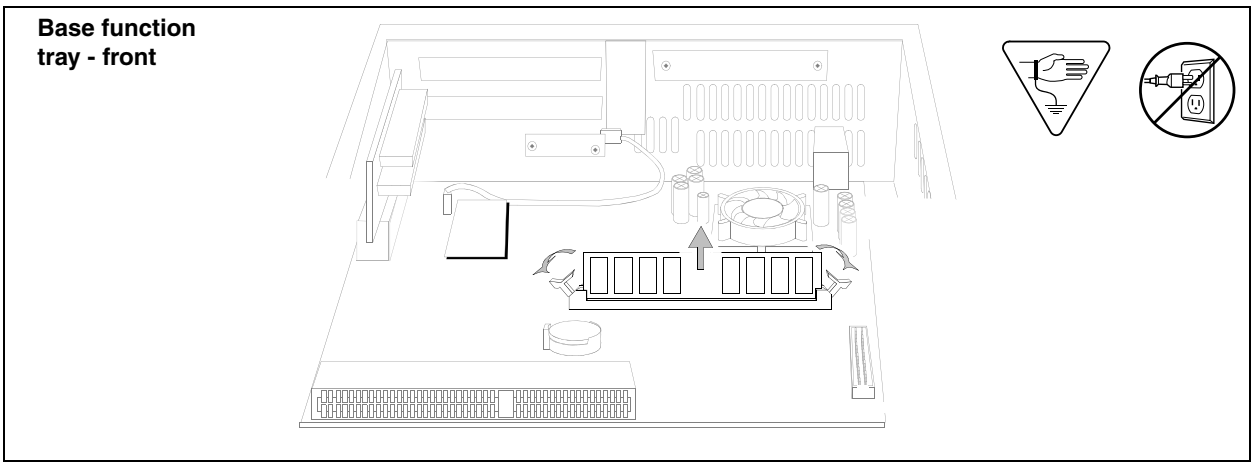

To install a DIMM card

Note: There must be at least one DIMM installed in the BCM main unit for the system to function.

Warning: Protect the hardware components against damage from electrostatic discharge. Always wear a grounded wrist strap before you handle components. Always place the components in a static-free container.

1 Position and correctly align the new DIMM (edge connectors first) into the connector.

Note: The DIMM has two notches on the edge connector. Position the DIMM so that one of the notches is on the side of the slot nearest to the BCM cards.

2 Carefully and firmly press down on the top of the DIMM card with your thumbs. At the same time, use your index fingers to move the fastening tabs inward toward the card. When the card is completely inserted in the connector, the fastening tabs clip to the side of the DIMM card.

Note: Do not force the DIMM into its slot. If the DIMM does not slide in easily, check the alignment of the DIMM.

3 Install the media services card (see "To install the media services card (MSC)" on page 308).

4 Partially install the base function tray in the main unit.

5 Install the WAN card (if applicable). See "Installing the WAN card" on page 304.

6 Connect the DS30 connectors to the MSC.

7 Completely install the base function tray in the main unit (see "To install the base function tray" on page 238). Ensure you do not pinch or damage any cables.

8 Install the base function tray bezel. See "To install the base function tray bezel" on page 240.

9 Insert all connectors in the correct locations on the base function tray face.

10 Restore the BCM system to operation. Refer to "Restarting the system after maintenance" on page 234 for details.

Replacing the clock/calendar battery

This section describes how to remove and install the clock/calendar battery located on the main card. This section provides the following procedures:

- "To remove the clock/calendar battery" on page 321
- "To install a new clock/calendar battery" on page 323

The clock/calendar battery supplies the power required to keep the CMOS information current if there is a power failure. Figure 174 provides an overview of the process of replacing this component.

Warning: You must replace the battery with a CR2032, 3v Maxell coin cell battery. Do not use any other manufacturer because this may invalidate the safety approval of the BCM main unit and possibly cause a fire or explosion.

Warning: Protect the hardware components against damage from electrostatic discharge. Always wear a grounded wrist strap before you handle components. Always place the components in a static-free container.

Figure 174 Battery replacement overview

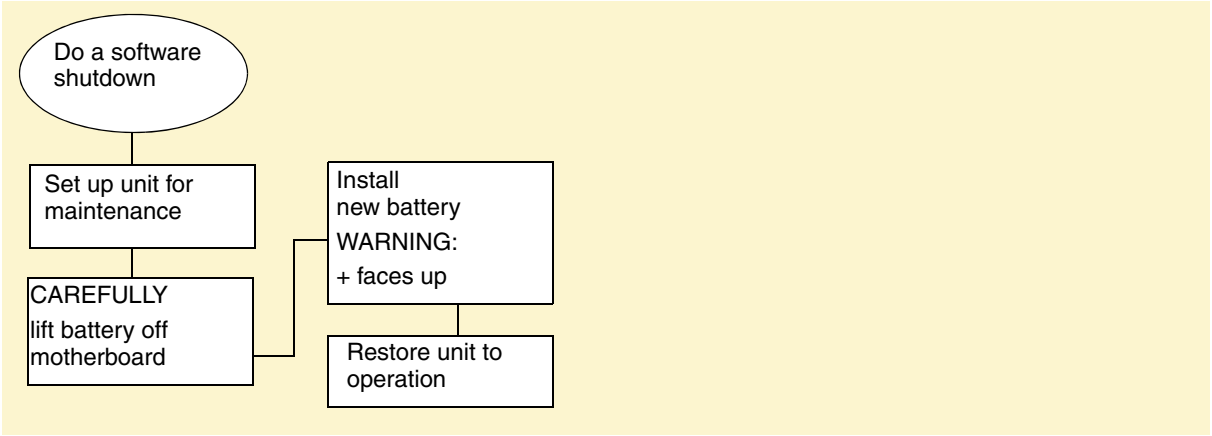

Danger: Disconnect the power cord, telephone cables, and network cables before opening the computer. Read and follow installation instructions carefully.

To remove the clock/calendar battery

Warning: Protect the hardware components against damage from electrostatic discharge. Always wear a grounded wrist strap before you handle components. Always place the components in a static-free container.

1. Shut down the system (see "Performing a system shutdown" on page 233).
2. Disconnect the BCM system from the AC power outlet.
3. Attach one end of the grounding strap to your wrist and the other end to a grounded metal surface.
4. Disconnect any connectors from the front of the base function tray.

5 Partially remove the base function tray from the main unit. Do not crimp, stretch, or damage the cables or connectors.

6 Remove the base function tray bezel. See "To remove the base function tray bezel" on page 239.

7 Remove the WAN card (if applicable). See "To remove the WAN card" on page 303.

8 Disconnect the DS30 cables from the MSC. Do not crimp, stretch, or damage the cables or connectors.

9 Completely remove the base function tray from the main unit. See "Removing the base function tray" on page 236.

10 Remove the media services card (see "To remove the media services card (MSC)" on page 306).

11 Use your finger to carefully lift the battery out of the socket. For the location of the battery socket, refer to Figure 175.

Caution: Do not use any type of tool to remove the battery.

Figure 175 Removing the clock/calendar battery

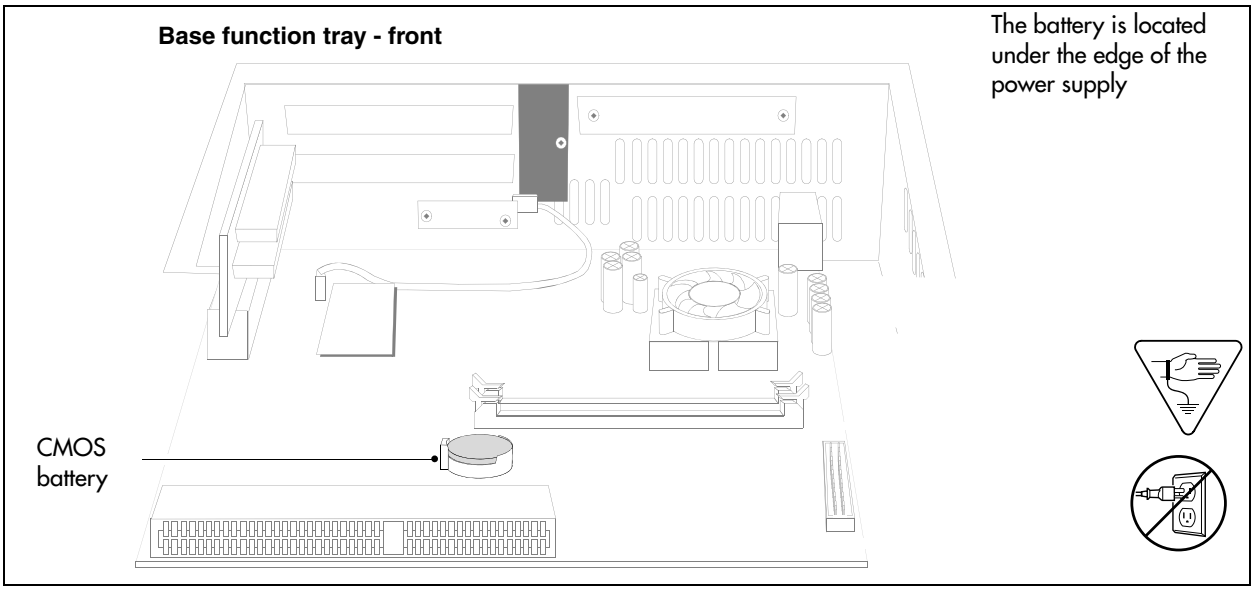

To install a new clock/calendar battery

Warning: There is a danger of explosion if you do not replace the battery correctly. You must replace the battery with a CR2032, 3v Maxell coin cell battery. The positive side of the battery must face up and the battery must sit securely in the battery socket.

Warning: Protect the hardware components against damage from electrostatic discharge. Always wear a grounded wrist strap before you handle components. Always place the components in a static-free container.

1. Remove the old battery. See "To remove the clock/calendar battery" on page 321.
2. Ensure you have the positive side of the battery facing up when you position it in the socket.
3. Push down until the battery snaps into the socket.
4. Install the media services card. See "To install the media services card (MSC)" on page 308.
5. Install the WAN card (if applicable). See "Installing the WAN card" on page 304.
6. Partially insert the base function tray into the main unit.
7. Connect the DS30 connectors to the MSC.
8. Position the PCI cover plate on the front of the base function tray so that the base function tray and cover plate screw holes align.
9. Position the PCI cover plate locking screw in the PCI cover plate. Tighten the PCI cover plate locking screw until the plate is firmly set in place (see Figure 163).
10. Install the base function tray bezel (see "To install the base function tray bezel" on page 240).
11. Completely insert the base function tray into the main unit. See "To install the base function tray" on page 238.
12. Restore the BCM system to operation. For details, refer to "Restarting the system after maintenance" on page 234.

Chapter 25
Replacing or installing a cooling fan

This chapter describes how to replace a cooling fan in the BCM200 and BCM400 main unit. This chapter also describes how to add a second fan to the BCM400 main unit (available through the field redundancy upgrade kit).

This chapter contains the following topics:

- "Replacing a cooling fan" on page 325
- "Troubleshooting cooling fans" on page 336

Note: For the BCM400 RFO configuration, a redundant cooling fan and power supply is included.

Warning: You must remove all of the connections to the BCM main unit before you power the system down. Failure to disconnect lines before you power down the system can cause damage to the system.

Warning: Protect the hardware components against damage from electrostatic discharge. Always wear a ground wrist strap before you handle components. Always place the components in static-free container.

Replacing a cooling fan

This section contains procedures to replace the cooling fan in the BCM200 and BCM400 main unit, and the expansion unit. This section contains the following topics:

- "Removing a BCM400 cooling fan" on page 326
- "Installing a BCM400 cooling fan" on page 328
- "Removing a BCM200 cooling fan" on page 331
- "Installing the BCM200 cooling fan" on page 333
- "Removing an expansion unit fan" on page 334
- "Installing an expansion unit fan" on page 336

Cooling fans circulate air through the main unit and expansion unit to prevent the components from overheating.

Figure 176 provides an overview of the fan replacement process.

Figure 176 Cooling fan replacement overview

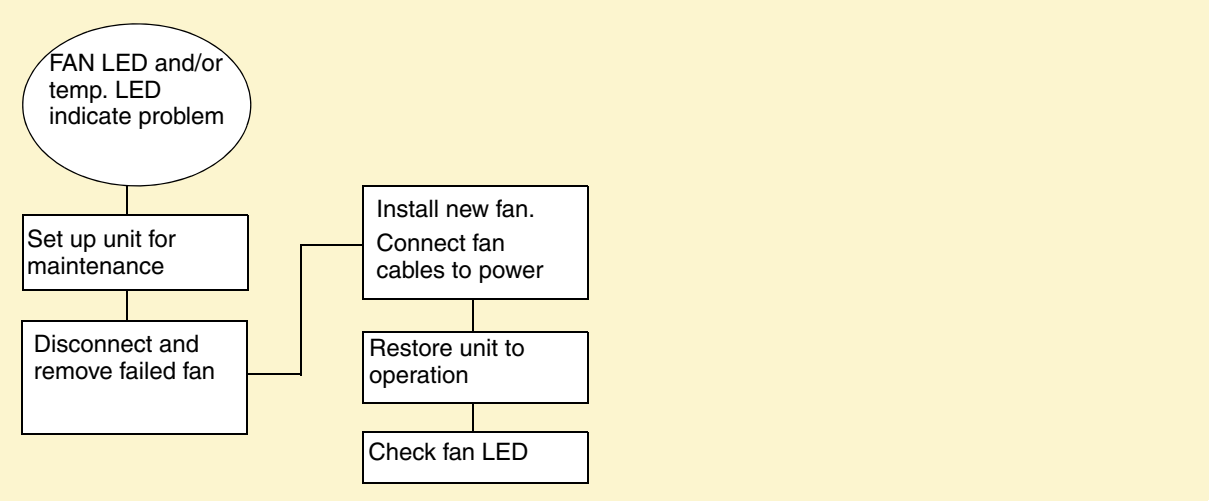

Removing a BCM400 cooling fan

Use this procedure to remove the cooling fans in a BCM400 standard or redundant feature option (RFO) configuration. The BCM400 standard main unit has one fan. The BCM400 RFO has two fans.

Warning: Protect the hardware components against damage from electrostatic discharge. Always wear a grounded wrist strap before you handle components. Always place the components in a static-free container.

Before you shut down the system, determine if a fan (in the redundant version) has failed. Refer to Table 84.

To remove a BCM400 cooling fan

1. Shut down the system (see "Performing a system shutdown" on page 233).
2. Disconnect the BCM system from the AC power outlet.
3. Attach one end of the grounding strap to your wrist and the other end to a grounded metal surface.
4. Remove the fan access panel at the rear of the BCM400 main unit (see Figure 177):
   a. Remove the fan access panel screws at the top and bottom of the panel. Place the screws in a safe location.
   b. Tip the top of the fan access panel toward you.
   c. Grasp the fan access panel with both hands and lift the away from the main unit. Do not stretch the fan cables.

Figure 177 Remove the BCM400 fan access panel

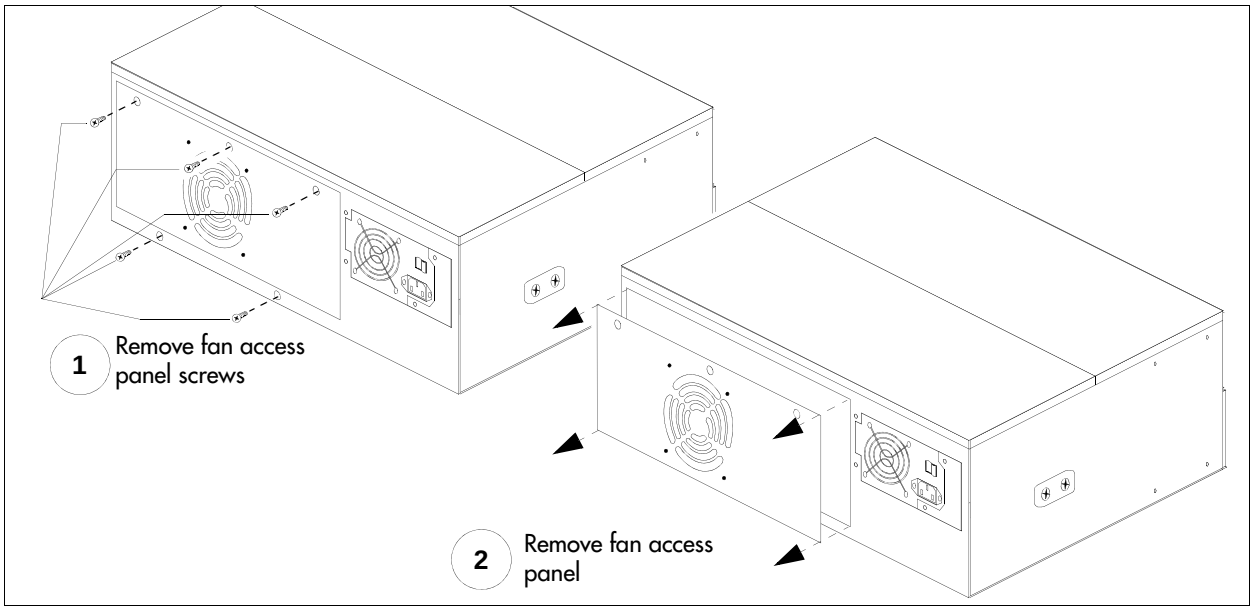

5 Disconnect the I/O card fan cables (see Figure 178). For the BCM400 RFO configuration, disconnect both fan cables from the I/O card.

Figure 178 Disconnect the fan cable from the I/O card

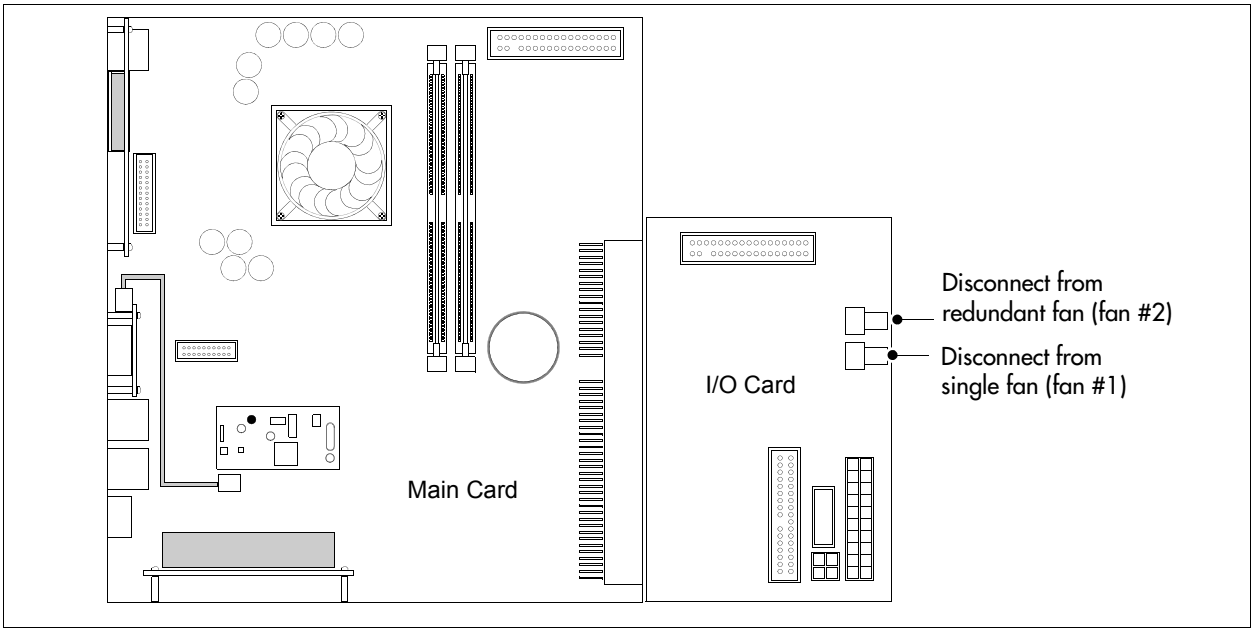

6 Remove the snap rivets that hold the fan to the fan access panel. The snap rivet has two parts: a center pin and a collar. Gently separate the plastic rivet pin with your fingernails from the center of the rivet collar. Remove the rivet pin and collar from the fan access panel. Place the rivet pin and collar in a safe location. See Figure 179 on page 328.

Figure 179 Remove the snap rivets from the BCM400 fan access panel

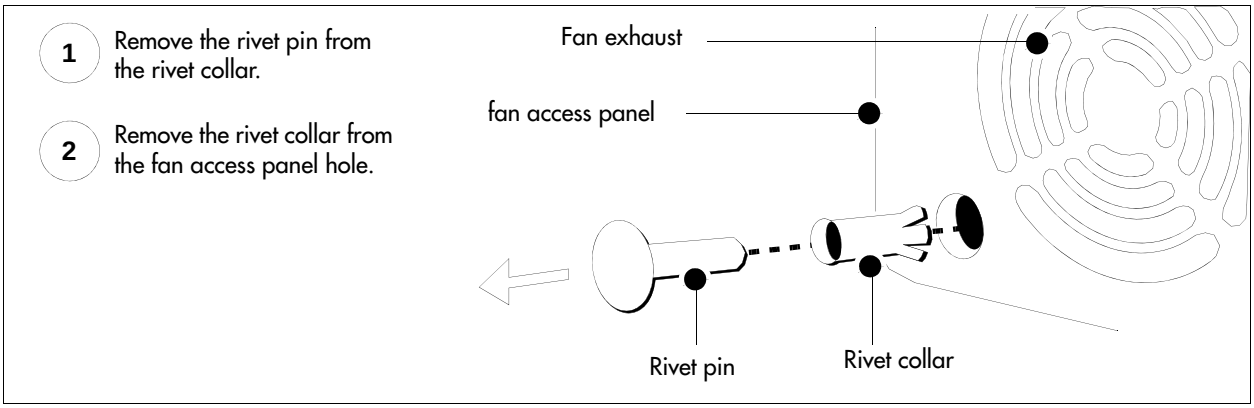

7 Lift the fan away from the fan access panel and place it in a safe location.

8 Repeat steps 6 and 7 to remove the redundant fan on the BCM400 RFO configuration.

Installing a BCM400 cooling fan

Use this procedure to install a single or redundant cooling fan in a BCM400 main unit.

Warning: Protect the hardware components against damage from electrostatic discharge. Always wear a grounded wrist strap before you handle components. Always place the components in a static-free container.

To install a BCM400 cooling fan

1 Place the new fan in the fan access panel in the position from which you removed the old fan. Ensure the I/O card connector cable is oriented to the bottom of the fan and that the fan label is closest to the grill on the panel.

Note: Ensure the label of the new fan faces the back wall of the BCM main unit. Airflow is out of the chassis as indicated by the arrows imprinted on the fan.

Note: Redundant feature option (dual fans)
If you are installing a second fan, you must use the new fan access panel (included with the redundant feature option kit) on the back of the BCM main unit. The redundant fan access panel has two fan exhausts.

2 Attach the fan to the fan access panel using the four plastic rivets.

a Align the fan chassis mounting holes with the holes in the fan access panel (see Figure 180).

Figure 180 Fan chassis mounting holes

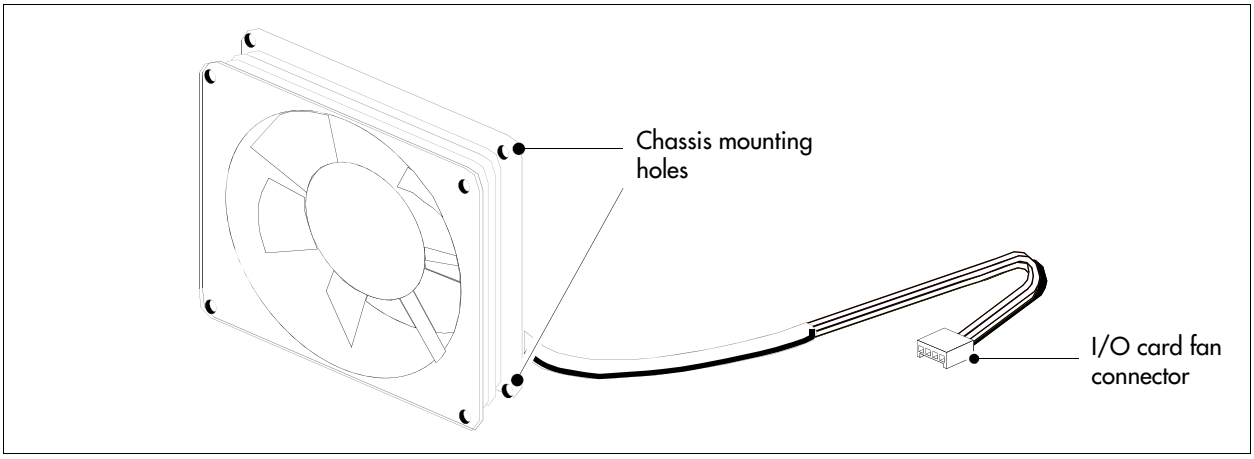

b Hold the fan in place against the fan access panel. Push the rivet collar through the fan access panel and fan chassis mounting holes.

c Insert the rivet pin into the rivet collar. Repeat this step for the second fan in the BCM400 RFO configuration (see Figure 181).

Figure 181 Insert the snap rivets into the BCM400 fan access panel

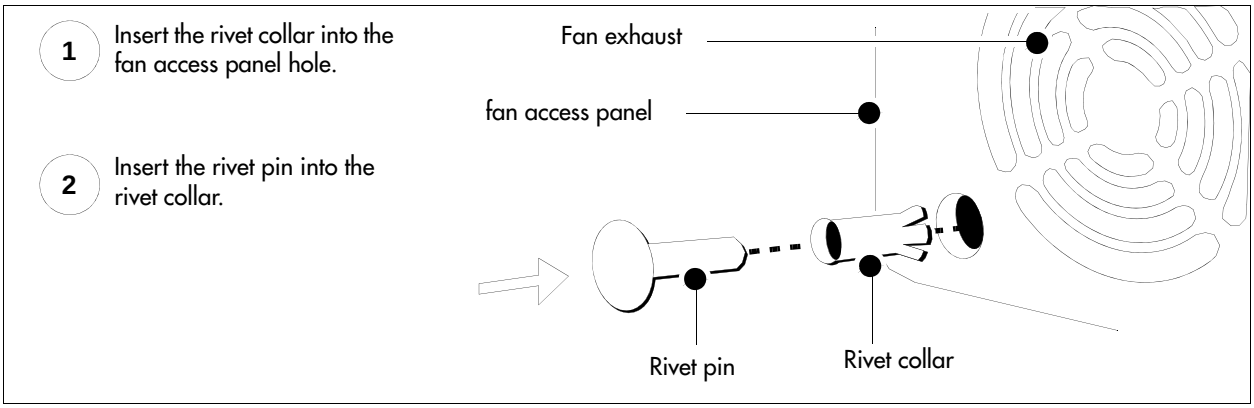

3 Connect the power supply cables for each fan to the I/O card (see Figure 182):

a Connect Fan #1 (the fan farthest from the power supply) to connector #1 on the I/O card.

b Connect Fan #2 (the fan closest to the power supply) to connector #2 on the I/O card.

Figure 182 Connect the fan cables to the I/O card

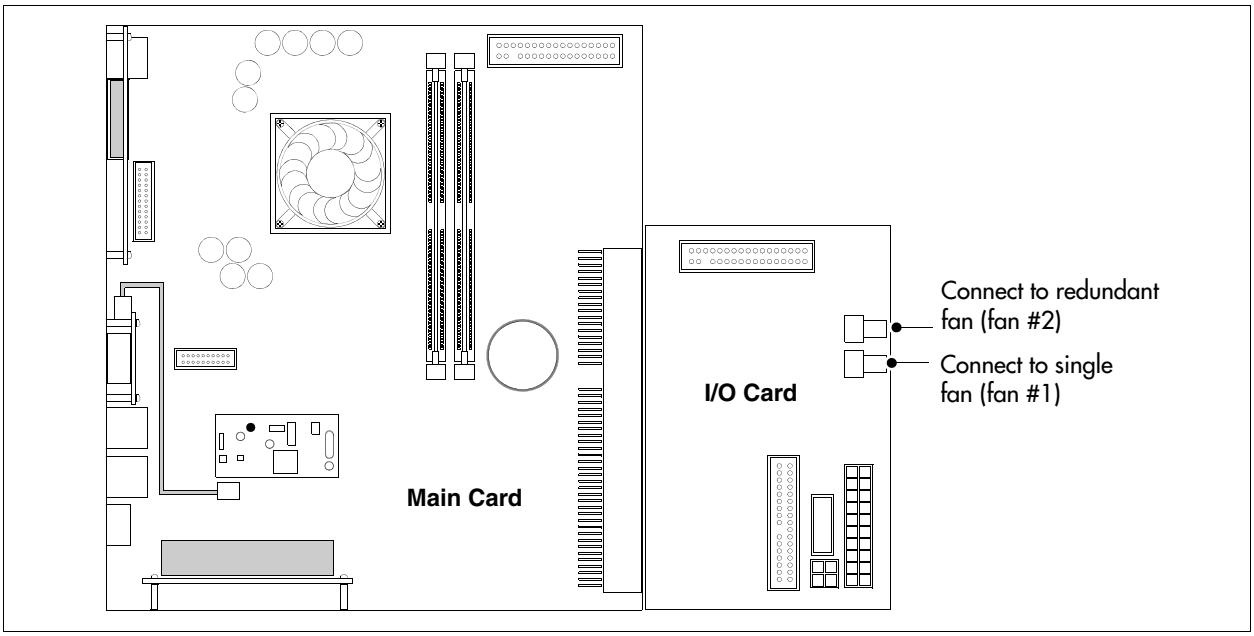

4 Mount the fan access panel to the main unit (see Figure 183):

a Tip the top of the fan access panel toward you.

b Insert the bottom lip of the fan access panel in the main unit.

c Align the screw holes in the fan access panel with the screw holes on the main unit.

d Install and tighten the fan access panel screws.

Figure 183 Install the fan access panel to the main unit

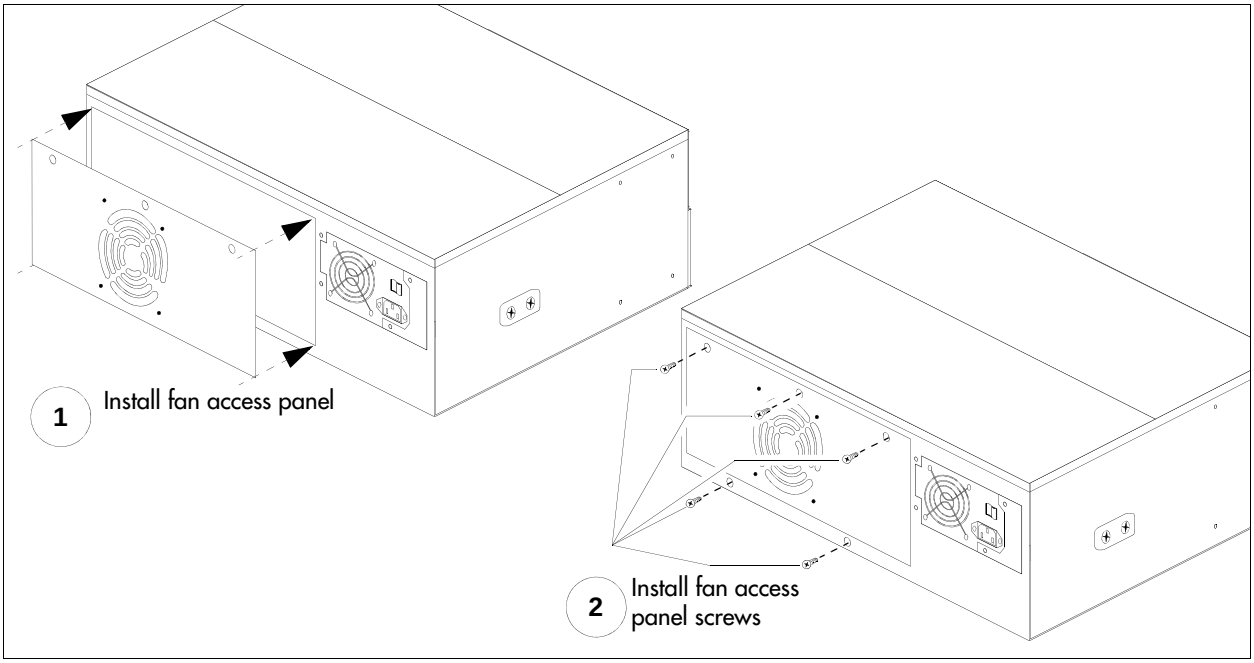

5 Restore the BCM system to operation. For details, refer to "Restarting the system after maintenance" on page 234.

The BCM system starts up when you connect the AC power cord. The start-up process takes several minutes to complete.

6 Test the direction of the fan exhaust air flow to determine if the fan is correctly installed.

a Hold a piece of paper or your hand close to the fan exhaust. A correctly installed fan blows air away from the main unit. If you are testing two fans, cover one fan at a time with your hand.

b If the fan exhaust air flow is incorrect, remove the cooling fan (see "Removing a BCM400 cooling fan" on page 326) and reinstall the fan in the correct position (this procedure).

Removing a BCM200 cooling fan

Use this procedure to remove the cooling fan in a BCM200 main unit.

Warning: Protect the hardware components against damage from electrostatic discharge. Always wear a grounded wrist strap before you handle components. Always place the components in a static-free container.

To remove a BCM200 cooling fan

1 Shut down the system (see "Performing a system shutdown" on page 233).

2 Disconnect the BCM system from the AC power outlet.

3 Attach one end of the grounding strap to your wrist and the other end to a grounded metal surface.

4 Remove the top cover from the main unit (see "Installing the main unit top cover" on page 248).

5 Disconnect the I/O card fan cable connection (see Figure 184 on page 332).

Figure 184 Disconnect the BCM200 fan cable from the I/O card

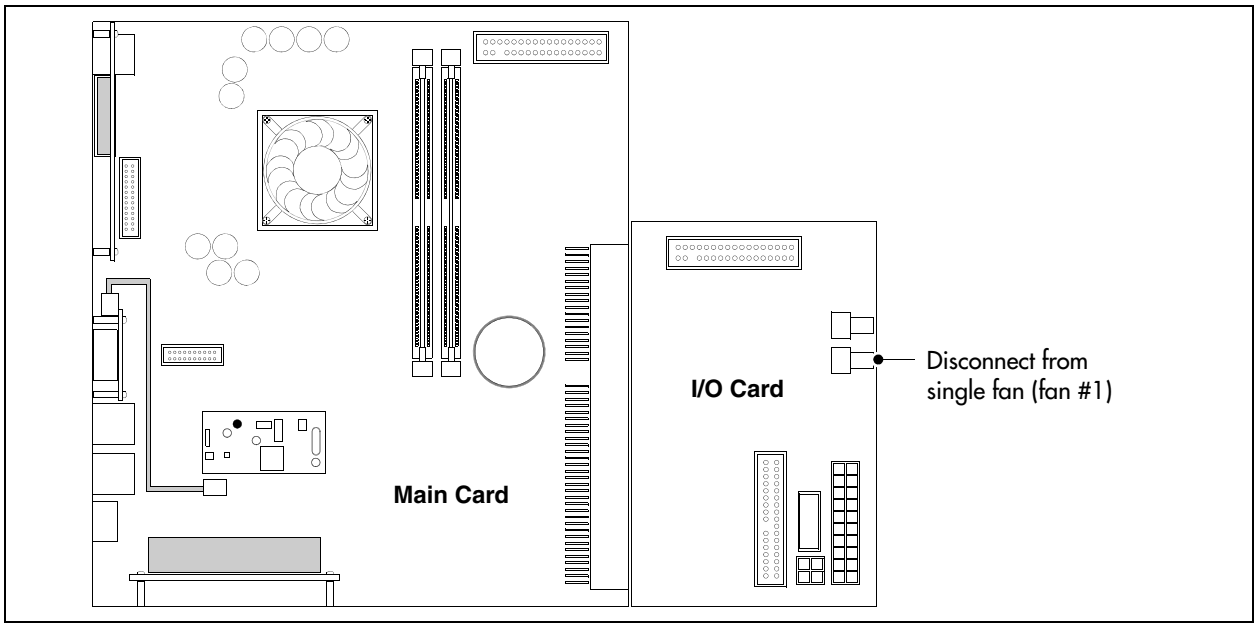

6 Remove the fan at the rear of the main unit (see Figure 185):

a Remove the snap rivets that hold the fan to the main unit. The snap rivet has two parts: a center pin and a collar. Gently separate the plastic rivet pin with your fingernails from the center of the rivet collar. Remove the rivet pin and the collar from the chassis. Place the rivet pin and collar in a safe location.

b Pull the fan away from the main unit (from the interior).

c Place the fan in a safe location.

Figure 185 Remove the snap rivets from the BCM200 main unit

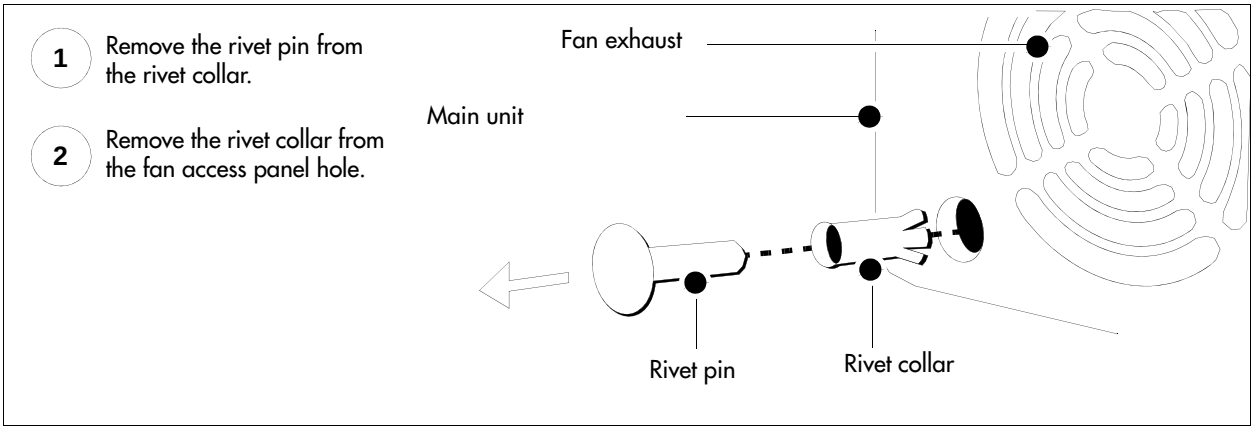

Installing the BCM200 cooling fan

Use this procedure to install a cooling fan in a BCM200 main unit.

Warning: Protect the hardware components against damage from electrostatic discharge. Always wear a grounded wrist strap before you handle components. Always place the components in a static-free container.

To install a BCM200 cooling fan

1 Place the new fan in proper location in the BCM200 main unit. Ensure the I/O card connector cable is on the bottom.

Note: Ensure the label of the new fan faces the back wall of the BCM main unit. Airflow is out of the chassis as indicated by the arrows imprinted on the fan.

2 Align the fan chassis mounting holes with the holes on the main unit.

3 Attach the fan to the main unit using four snap rivets:

a Hold the fan in place and push the rivet collar through the fan access panel and fan chassis mounting holes.

b Insert the rivet pin into the rivet collar (see Figure 186).

Figure 186 Insert the snap rivets into the BCM200 main unit

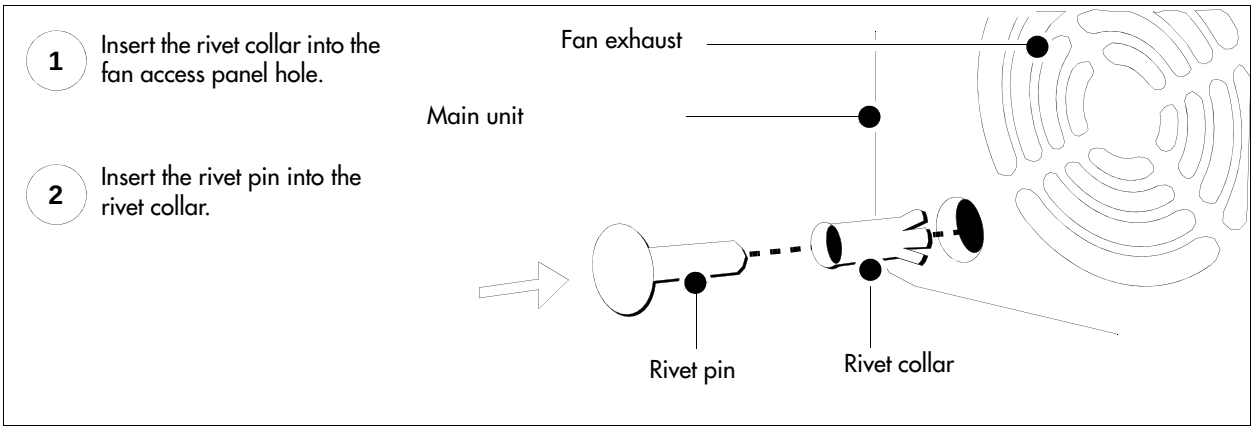

4 Connect the power supply cable to the I/O card. Connect the fan to connector #1 on the I/O card.

5 Replace the main unit top cover. See "Installing the main unit top cover" on page 248.

6 Restore the BCM system to operation. For details, refer to "Restarting the system after maintenance" on page 234.

The BCM system starts up when you connect the AC power cord. The start-up process takes several minutes to complete.

7 Test the direction of the fan exhaust air flow to determine if the fan is correctly installed.

a Hold a piece of paper or your hand close to the fan exhaust. A correctly installed fan blows air away from the main unit.

b If the fan exhaust air flow is incorrect, remove the cooling fan (see "Removing a BCM200 cooling fan" on page 331) and reinstall the fan in the correct orientation (this procedure).

Removing an expansion unit fan

The BCM expansion unit comes either with one fan or a redundant fan set. The single-fan unit is not upgradeable.

Warning: Protect the hardware components against damage from electrostatic discharge. Always wear a grounded wrist strap before you handle components. Always place the components in a static-free container.

To remove an expansion unit fan

1 Shut down the system (see "Performing a system shutdown" on page 233).

2 Disconnect the fan power cable from the hub card.

Note: If the unit has redundant fans, each fan has a connector on the hub board.

3 Locate the screws that fasten the fan casing to the expansion unit back wall and remove them. Refer to Figure 187 on page 335 and Figure 188 on page 335.

4 Remove the four screws (or snap rivets) that hold the fan to the expansion unit.

5 Lift the failed fan out of the expansion unit.

Figure 187 Fan screws location in expansion unit, 2.0 models.

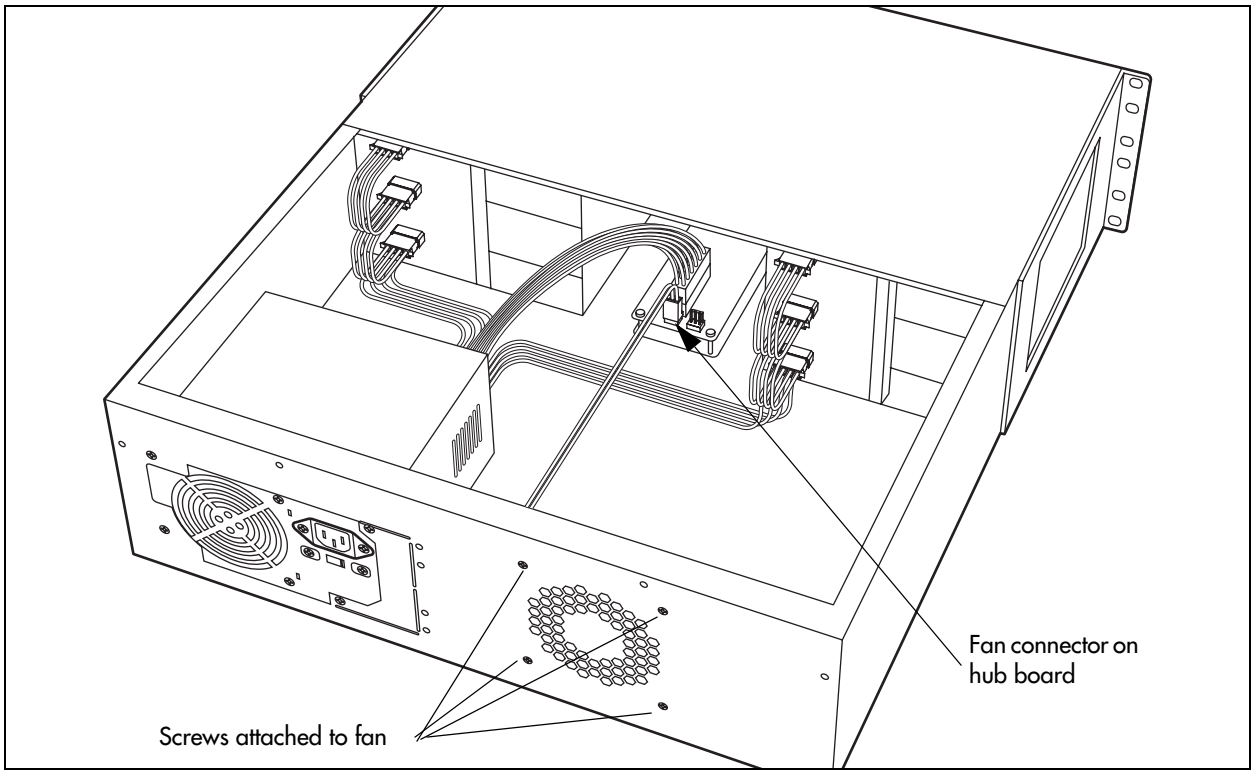

Figure 188 Fan screws location in expansion unit, 2.5 redundancy models.

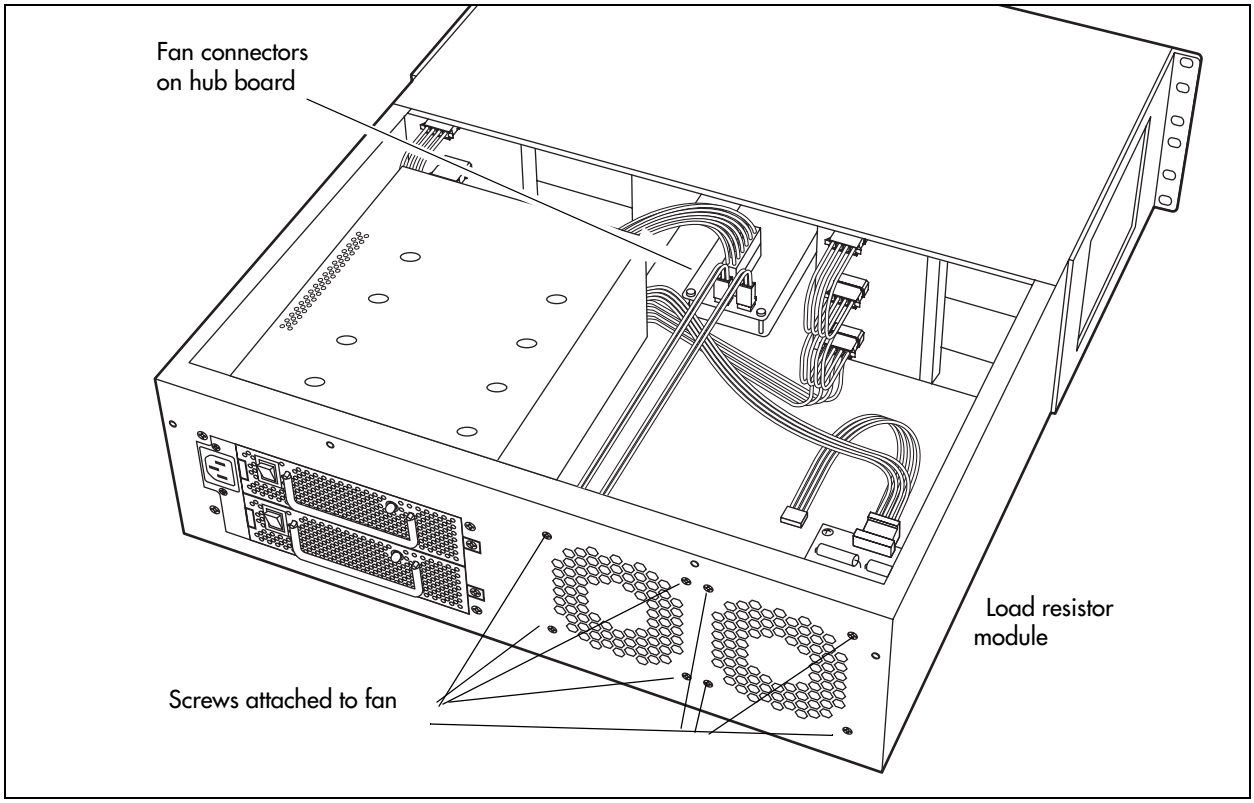

Installing an expansion unit fan

Warning: Protect the hardware components against damage from electrostatic discharge. Always wear a grounded wrist strap before you handle components. Always place the components in a static-free container.

Note: Ensure the label of the new fan faces the back wall of the BCM expansion unit chassis. Airflow is out of the chassis as indicated by the arrows imprinted on the fan.

To install an expansion unit fan

1. Place the fan in the expansion unit so that the label faces the back wall of the unit.
2. Align the screw holes in the fan with the screw holes in the expansion unit and attach the fan.
3. Connect the fan power supply cable to the hub board.
4. Replace the cover.
5. Restore the BCM system to operation. For details, refer to "Restarting the system after maintenance" on page 234.

   The BCM system starts up when you connect the AC power cord. The start-up process takes several minutes to complete.
6. Test the direction of the fan exhaust air flow to determine if the fan is correctly installed.
   a. Hold a piece of paper or your hand close to the fan exhaust. A correctly installed fan blows air away from the main unit.
   b. If the fan exhaust air flow is incorrect, remove the cooling fan (see "Removing a BCM200 cooling fan" on page 331) and reinstall the fan in the correct orientation (this procedure).

Troubleshooting cooling fans

There are three LEDs on the front of the BCM base function tray and one on the front of the expansion unit used to assess fan functionality. Table 84 describes the possible states of the fan and temperature LEDs.

Table 84 Fan and temperature LEDs on the base function tray

LED Label	Description	Green LED On	Red LED On (Only)
	Temperature	Temperature is below threshold.	Temperature is in alarm status. Possible fans failure.
	Fans	All installed fans are working.	There is a problem with a minimum of one fan.
	Power	All components are working.	Component failure.

Appendix A
DTM wiring chart

The digital telephone line is connected to the digital trunk module (DTM) through the RJ-48C jack on the front of the media bay module (MBM) (see Figure 189).

Figure 189 DTM RJ-48C port

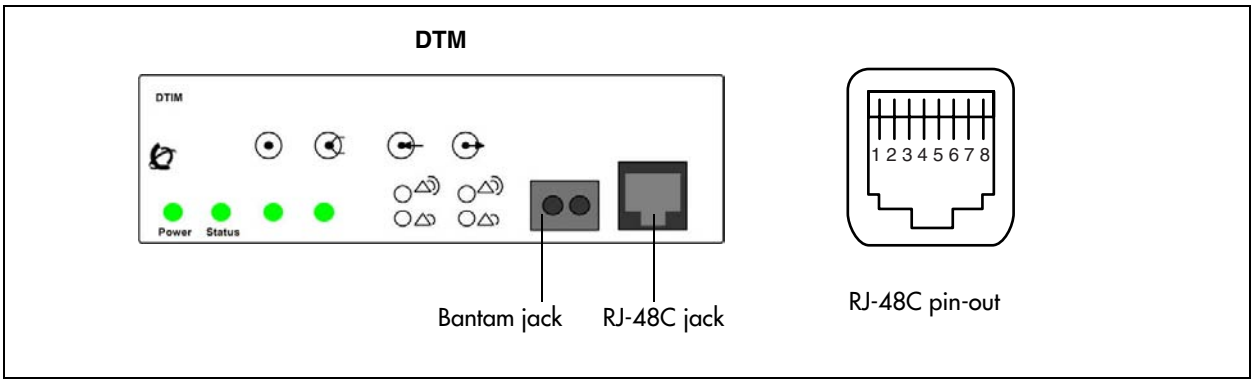

Table 85 and Table 86 list the wiring details for the RJ-48C port.

Table 85 DTM RJ-48C port wiring

Pin	Signal
1	Receive Ring
2	Receive Tip
3	Receive Shield
4	Transmit Ring
5	Transmit Tip
6	Transmit Shield
7	No connection
8	No connection

Table 86 DTM line numbering

Line type	Default line numbers on Expansion port 1	Default line numbers on Expansion port 2
T1	065 – 088	095 – 118
PRI	065 – 087	095 – 117
E1	065 – 094	095 – 124

Appendix B
BRIM wiring chart

The digital BRI ISDN lines are connected to the BRIM through the RJ-45 jacks on the front of the media bay module (MBM) (see Figure 190). You can connect up to four BRI ISDN lines to the BRIM.

Figure 190, Table 87, and Table 88 apply to S-Loop and T-Loop connections. S-Loop connections are used to connect S-Loop devices, such as video phones, terminal adapters, and group 3 fax machines. The T-Loop connections are used to connect to the CO/PSTN.

Warning: For a U-Loop connection, the BRIM must be connected only to an NT1 provided by the service provider. The NT1 must provide a Telecommunication Network Voltage (TNV) to Safety Extra Low Voltage (SELV) barrier.

Figure 190 BRIM RJ-45 ports

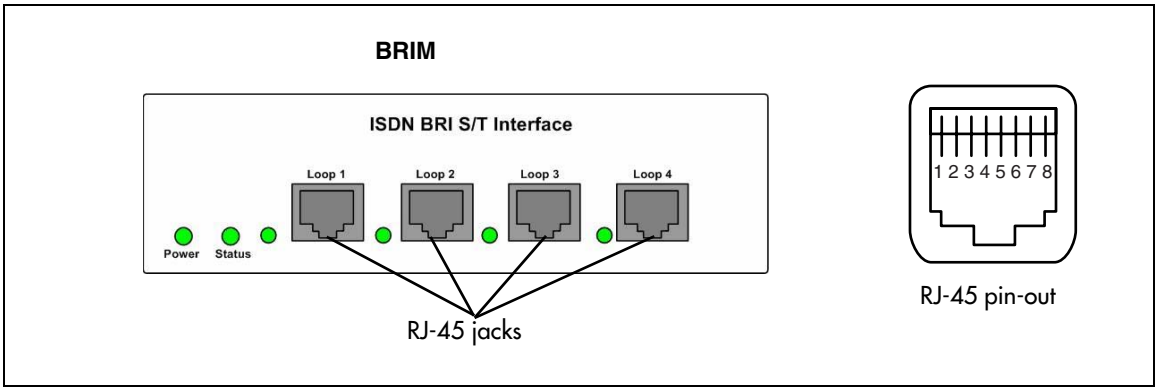

Table 87 and Table 88 list the wiring details for the RJ-45 ports.

Table 87 BRIM RJ-45 port wiring

Pin	Signal	Signal on system side
1	No connection	No connection
2	No connection	No connection
3	+ Receive (+Rx)	+Tx
4	+ Transmit (+Tx)	+Rx
5	- Transmit (-Tx)	-Rx
6	- Receive (-Rx)	-Tx
7	No connection	No connection
8	No connection	No connection

Table 88 BRIM line numbering

Port number	Default line numbers on Expansion port 1	Default line numbers on Expansion port 2
1	065 – 066	095 – 096
2	067 – 068	097 – 098
3	069 – 070	099 – 100
4	071 – 072	101 – 102

Appendix C
GATM wiring chart

Analog telephone lines are connected to the GATM4 or GATM8 through the RJ-21 connector on the front of the media bay module (MBM) (see Figure 191).

Figure 191 GATM RJ-21 connector

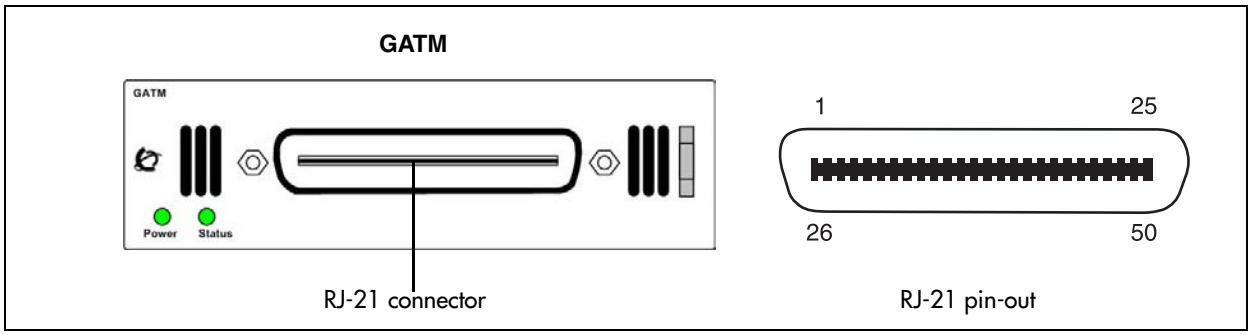

Table 89 lists the wiring details for the RJ-21 connector on the GATM4.

Table 89 GATM4 RJ-21 connector wiring (Sheet 1 of 2)

Line	Pin	Connection	Wire color	Default line numbers on Expansion port 1	Default line numbers on Expansion port 2
1	26	Tip	White-Blue	**065**	**095**
	1	Ring	Blue-White		
2	27	Tip	White-Orange	**066**	**096**
	2	Ring	Orange-White		
—	28	No connection	White-Green	—	—
	3	No connection	Green-White		
—	29	No connection	White-Brown	—	—
	4	No connection	Brown-White		
3	30	Tip	White-Slate	**067**	**097**
	5	Ring	Slate-White		
4	31	Tip	Red-Blue	**068**	**098**
	6	Ring	Blue-Red		
—	32	No connection	Red-Orange	—	—
	7	No connection	Orange-Red		
. . .	. . .	. . .	. . .	. . .	. . .
—	49	No connection	Violet-Brown	—	—
	24	No connection	Brown-Violet		

Table 89 GATM4 RJ-21 connector wiring (Sheet 2 of 2)

Line	Pin	Connection	Wire color	Default line numbers on Expansion port 1	Default line numbers on Expansion port 2
Aux	50	Tip	Violet-Slate	—	—
	25	Ring	Slate-Violet		
Note: The Aux port supports full data speeds. When the line is in use by an analog device, the icon is lit on the phone to indicate it is in use. If you try to seize the line using the phone, the display shows “in use.” Also, in the event of a power failure, an analog set on line 1 goes active (powered by the CO).					

Table 90 lists the wiring details for the RJ-21 connector on the GATM8.

Table 90 GATM8 RJ-21 connector wiring (Sheet 1 of 2)

Line	Pin	Connection	Wire color	Default line numbers on Expansion port 1	Default line numbers on Expansion port 2
1	26	Tip	White-Blue	**065**	**095**
	1	Ring	Blue-White		
2	27	Tip	White-Orange	**066**	**096**
	2	Ring	Orange-White		
—	28	No connection	White-Green	—	—
	3	No connection	Green-White		
—	29	No connection	White-Brown	—	—
	4	No connection	Brown-White		
3	30	Tip	White-Slate	**067**	**097**
	5	Ring	Slate-White		
4	31	Tip	Red-Blue	**068**	**098**
	6	Ring	Blue-Red		
—	32	No connection	Red-Orange	—	—
	7	No connection	Orange-Red		
—	33	No connection	Red-Green	—	—
	8	No connection	Green-Red		
5	34	Tip	Red-Brown	**073**	**103**
	9	Ring	Brown-Red		
6	35	Tip	Red-Slate	**074**	**104**
	10	Ring	Slate-Red		
—	36	No connection	Black-Blue	—	—
	11	No connection	Blue-Black		
—	37	No connection	Black-Orange	—	—
	12	No connection	Orange-Black		
7	38	Tip	Black-Green	**075**	**105**
	13	Ring	Green-Black		
8	39	Tip	Black-Brown	**076**	**106**
	14	Ring	Brown-Black		

Table 90 GATM8 RJ-21 connector wiring (Sheet 2 of 2)

Line	Pin	Connection	Wire color	Default line numbers on Expansion port 1	Default line numbers on Expansion port 2
—	40	No connection	Black-Slate	—	—
	15	No connection	Slate-Black		
. . .	. . .	. . .	. . .	. . .	. . .
—	49	No connection	Violet-Brown	—	—
	24	No connection	Brown-Violet		
Aux (see Note)	50	Tip	Violet-Slate	—	—
	25	Ring	Slate-Violet		

Note: The Aux port supports full data speeds. When the line is in use by an analog device, the icon is lit on the phone to indicate it is in use. If you try to seize the line using the phone, the display shows “in use.” Also, in the event of a power failure, an analog set on line 1 goes active (powered by the CO).

Appendix D
4x16 wiring charts

You can connect up to 4 analog telephone lines and up to 16 digital telephones to the 4x16 media bay module (MBM).

The analog telephones lines are connected to the 4x16 MBM through the RJ-11 jacks (labeled 1 to 4) on the front of the MBM (see Figure 192). Do not connect analog telephone lines to the auxiliary jack on the front of the MBM.

The digital telephones, such as the Business Series Telephones, are connected to the RJ-21 connector on the front of the 4x16 MBM.

Figure 192 4x16 MBM connectors

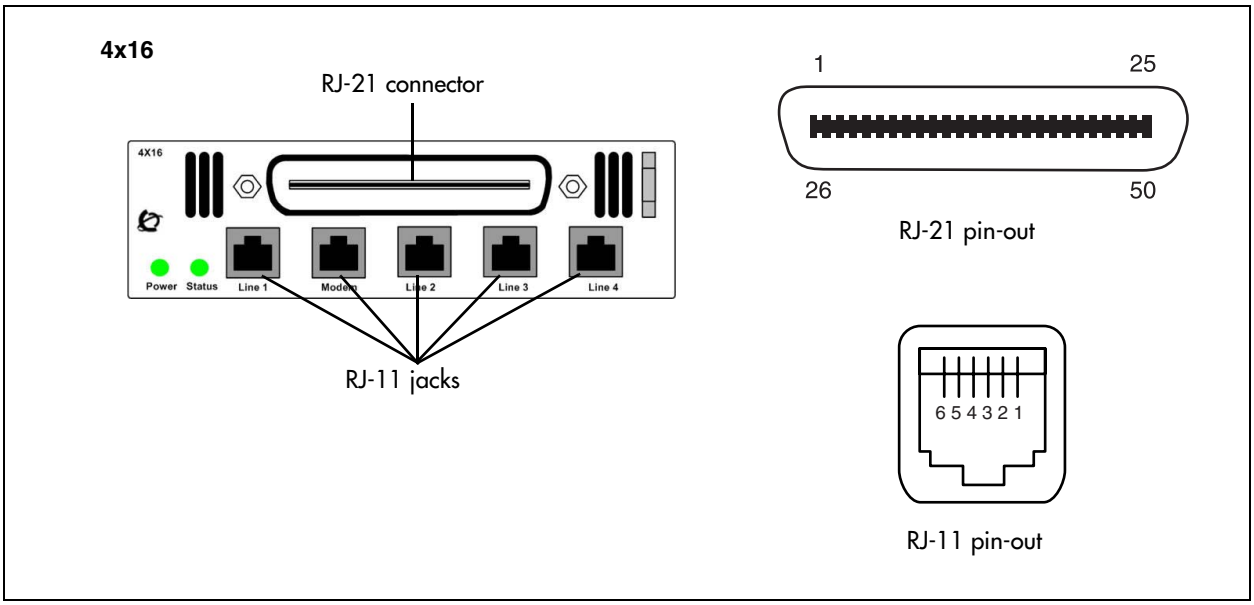

Table 91 and Table 92 list the wiring details for the RJ-11 jacks on the 4x16 MBM. This wiring applies to the numbered ports and the auxiliary ports.

Table 91 4x16 RJ-11 port wiring

Pin	Signal
1	No connection
2	No connection
3	Ring
4	Tip
5	No connection
6	No connection

Table 92 4x16 MBM default line numbering

Port number	Default line number on Expansion port 1	Default line number on Expansion port 2
1	065	095
2	066	096
3	067	097
4	068	098

Table 93 lists the wiring details for the RJ-21 connector on the 4x16 MBM.

Table 93 4x16 MBM RJ-21 connector wiring (Sheet 1 of 2)

Set	Pin	Connection	Wire color	Default DN on Expansion port 1	Default DN on Expansion port 2
1	26	Tip	White-Blue	**253**	**285**
	1	Ring	Blue-White		
2	27	Tip	White-Orange	**254**	**286**
	2	Ring	Orange-White		
3	28	Tip	White-Green	**255**	**287**
	3	Ring	Green-White		
4	29	Tip	White-Brown	**256**	**288**
	4	Ring	Brown-White		
5	30	Tip	White-Slate	**257**	**289**
	5	Ring	Slate-White		
6	31	Tip	Red-Blue	**258**	**290**
	6	Ring	Blue-Red		
7	32	Tip	Red-Orange	**259**	**291**
	7	Ring	Orange-Red		
8	33	Tip	Red-Green	**260**	**292**
	8	Ring	Green-Red		
9	34	Tip	Red-Brown	**261**	**293**
	9	Ring	Brown-Red		
10	35	Tip	Red-Slate	**262**	**294**
	10	Ring	Slate-Red		
11	36	Tip	Black-Blue	**263**	**295**
	11	Ring	Blue-Black		
12	37	Tip	Black-Orange	**264**	**296**
	12	Ring	Orange-Black		
13	38	Tip	Black-Green	**265**	**297**
	13	Ring	Green-Black		

Table 93 4x16 MBM RJ-21 connector wiring (Sheet 2 of 2)

Set	Pin	Connection	Wire color	Default DN on Expansion port 1	Default DN on Expansion port 2
14	39	Tip	Black-Brown	**266**	**298**
	14	Ring	Brown-Black		
15	40	Tip	Black-Slate	**267**	**299**
	15	Ring	Slate-Black		
16	41	Tip	Yellow-Blue	**268**	**300**
	16	Ring	Blue-Yellow		
—	42	No connection	Yellow-Orange	—	—
	17	No connection	Orange-Yellow		
. . .	. . .	. . .	. . .	. . .	. . .
—	50	No connection	Violet-Slate	—	—
	25	No connection	Slate-Violet		

Appendix E
DSM16 and DSM32 wiring charts

Digital telephones, such as the Business Series Telephones, are connected to a digital station module (DSM16 or DSM32) through the RJ-21 connectors on the front of the media bay modules (MBM). The DSM16 has a single RJ-21 connector and the DSM32 has two RJ-21 connectors (see Figure 193).

Figure 193 DSM16 and DSM32 RJ-21 connectors

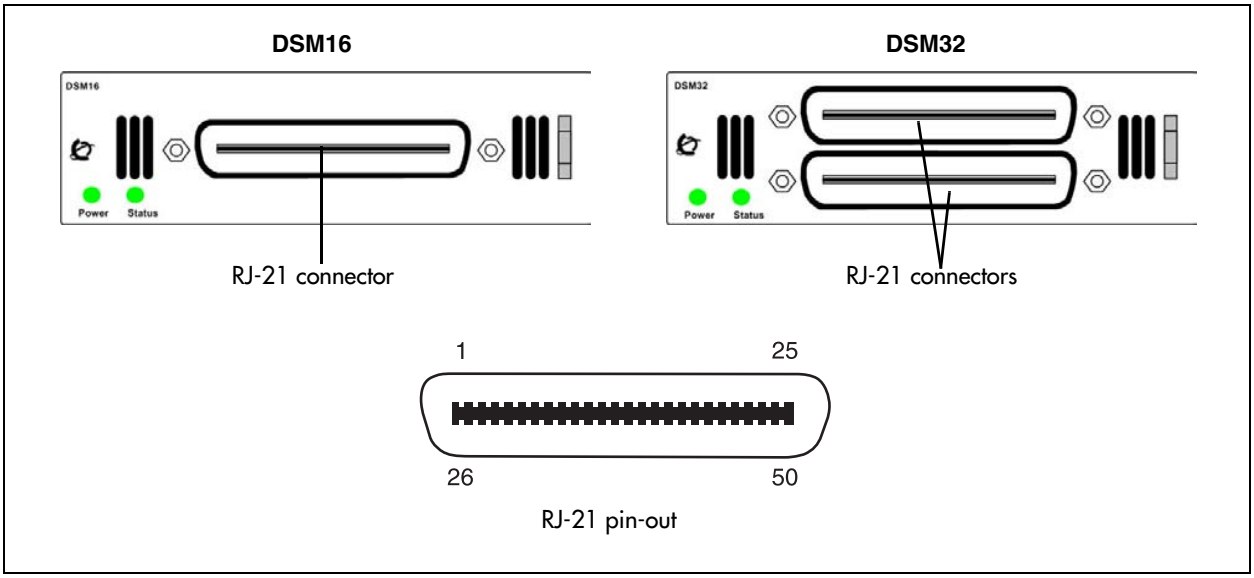

Table 94 lists the wiring details for the RJ-21 connectors on the DSM16 and DSM32.

Table 94 DSM16 and DSM32 RJ-21 connector wiring (Sheet 1 of 2)

Set	Pin	Connection	Wire color	Default DN on Expansion port 1		Default DN on Expansion port 2	
				DSM16 or Lower DSM32 RJ-21	Upper DSM32 RJ-21	DSM16 or Lower DSM32 RJ-21	Upper DSM32 RJ-21
1	26	Tip	White-Blue	237	253	269	285
	1	Ring	Blue-White				
2	27	Tip	White-Orange	238	254	270	286
	2	Ring	Orange-White				
3	28	Tip	White-Green	239	255	271	287
	3	Ring	Green-White				
4	29	Tip	White-Brown	240	256	272	288
	4	Ring	Brown-White				

Table 94 DSM16 and DSM32 RJ-21 connector wiring (Sheet 2 of 2)

Set	Pin	Connection	Wire color	Default DN on Expansion port 1		Default DN on Expansion port 2	
				DSM16 or Lower DSM32 RJ-21	Upper DSM32 RJ-21	DSM16 or Lower DSM32 RJ-21	Upper DSM32 RJ-21
5	30	Tip	White-Slate	**241**	**257**	**273**	**289**
	5	Ring	Slate-White				
6	31	Tip	Red-Blue	**242**	**258**	**274**	**290**
	6	Ring	Blue-Red				
7	32	Tip	Red-Orange	**243**	**259**	**275**	**291**
	7	Ring	Orange-Red				
8	33	Tip	Red-Green	**244**	**260**	**276**	**292**
	8	Ring	Green-Red				
9	34	Tip	Red-Brown	**245**	**261**	**277**	**293**
	9	Ring	Brown-Red				
10	35	Tip	Red-Slate	**246**	**262**	**278**	**294**
	10	Ring	Slate-Red				
11	36	Tip	Black-Blue	**247**	**263**	**279**	**295**
	11	Ring	Blue-Black				
12	37	Tip	Black-Orange	**248**	**264**	**280**	**296**
	12	Ring	Orange-Black				
13	38	Tip	Black-Green	**249**	**265**	**281**	**297**
	13	Ring	Green-Black				
14	39	Tip	Black-Brown	**250**	**266**	**282**	**298**
	14	Ring	Brown-Black				
15	40	Tip	Black-Slate	**251**	**267**	**283**	**299**
	15	Ring	Slate-Black				
16	41	Tip	Yellow-Blue	**252**	**268**	**284**	**300**
	16	Ring	Blue-Yellow				
—	42	No connection	Yellow-Orange	—	—	—	—
	17	No connection	Orange-Yellow				
. . .	. . .	. . .	. . .	. . .	. . .	. . .	. . .
—	50	No connection	Violet-Slate	—	—	—	—
	25	No connection	Slate-Violet				

Appendix F
ASM8, ASM8+, and GASM8 wiring chart

Analog telephony devices, such as single-line telephones, modems, and fax machines, are connected to the analog station module (ASM) through the RJ-21 connector on the front of the media bay module (MBM) (see Figure 194).

Figure 194 ASM RJ-21 connector

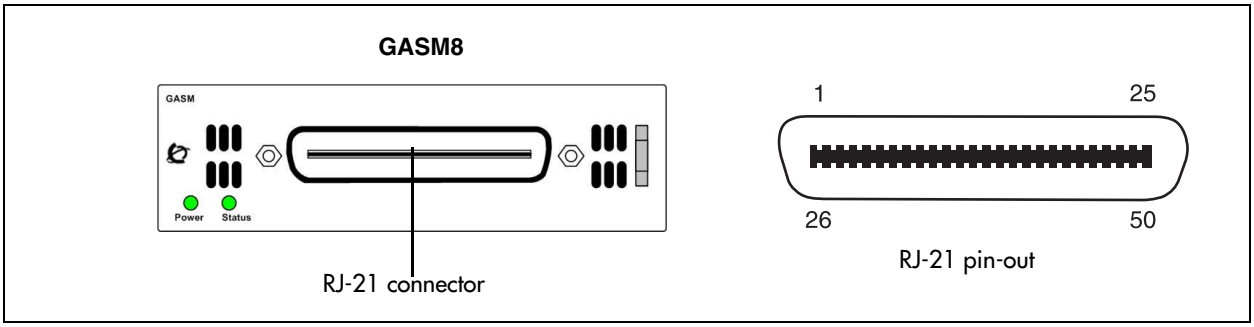

Table 95 lists the wiring details for the RJ-21 connector on the ASM.

Table 95 ASM RJ-21 connector wiring (Sheet 1 of 2)

Set	Pin	Connection	Wire color	Default DN on Expansion port 1	Default DN on Expansion port 2
1	26	Tip	White-Blue	**237**	**269**
	1	Ring	Blue-White		
2	27	Tip	White-Orange	**238**	**270**
	2	Ring	Orange-White		
3	28	Tip	White-Green	**239**	**271**
	3	Ring	Green-White		
4	29	Tip	White-Brown	**240**	**272**
	4	Ring	Brown-White		
5	30	Tip	White-Slate	**241**	**273**
	5	Ring	Slate-White		
6	31	Tip	Red-Blue	**242**	**274**
	6	Ring	Blue-Red		
7	32	Tip	Red-Orange	**243**	**275**
	7	Ring	Orange-Red		
8	33	Tip	Red-Green	**244**	**276**
	8	Ring	Green-Red		
—	34	No connection	Red-Brown	—	—
	9	No connection	Brown-Red		

Table 95 ASM RJ-21 connector wiring (Sheet 2 of 2)

Set	Pin	Connection	Wire color	Default DN on Expansion port 1	Default DN on Expansion port 2
. . .	. . .	. . .	. . .	. . .	. . .
—	50	No connection	Violet-Slate	—	—
	25	No connection	Slate-Violet		

Appendix G
Market profile attributes

This section describes some of the differences in the market profile attributes. These attributes are based on the market profile that you select when you configure the system. Each market profile is designed using a set of system attributes that provide specific functionality for the geographical area in which the system is deployed.

This section covers the following main topics:

- "Media bay module availability" on page 353
- "FEM MBM–Norstar trunk cartridge combinations" on page 354
- "Time zones and language information" on page 355
- "Core parameters for market profiles" on page 357
- "Global analog trunk parameters" on page 370
- "GASM8 parameters" on page 373
- "ISDN line services" on page 376
- "Analog and digital trunk types" on page 377

Media bay module availability

Some of the media bay modules (MBM) are customized for a specific region and are not available to all market profiles. Table 96 provides a list of market profiles and MBMs available within each market profile.

The symbols in the chart are defined as follows:

✓ indicates full support. The MBM is available and is localized in the market profile.

✸ indicates that functionality and support is limited. The MBM is available in the market profile, but is not localized.

Table 96 Media bay module availability by market profile (Sheet 1 of 2)

Market profile	DSM16(+)/ DSM32 (+)	ASM/ ASM8	ASM8+	GASM8	CTM4/ CTM8	GATM4/ GATM8	4x16	BRI	DTM
Australia	✓		✸	✓		✓		✓	✓
Brazil	✓					✓		✓	✓
CALA	✓				✸	✸	✸	✓	✓
Canada	✓	✓	✓	✓	✓	✓	✓	✓	✓
Caribbean	✓			✓	✓	✓	✓	✓	✓
Denmark	✓							✓	✓
France	✓							✓	✓

Table 96 Media bay module availability by market profile (Sheet 2 of 2)

Market profile	DSM16(+)/ DSM32 (+)	ASM/ ASM8	ASM8+	GASM8	CTM4/ CTM8	GATM4/ GATM8	4x16	BRI	DTM
Germany	✓							✓	✓
Global	✓	✸	✸	✸	✸	✸	✸	✓	✓
Holland	✓							✓	✓
Hong Kong	✓	✸	✸	✸	✸	✸		✓	✓
Italy	✓							✓	✓
Mexico	✓			✸		✓		✓	✓
New Zealand	✓		✸	✸		✸		✓	✓
North America	✓	✓	✓	✓	✓	✓	✓	✓	✓
Norway	✓							✓	✓
Poland	✓	✸	✸	✓		✓		✓	✓
PRC	✓				✸	✸		✓	✓
Spain	✓							✓	✓
Sweden	✓							✓	✓
Switzerland	✓							✓	✓
Taiwan	✓				✸	✓		✓	✓
United Kingdom	✓	✸	✸	✓		✓		✓	✓

FEM MBM–Norstar trunk cartridge combinations

Norstar trunk cartridges can be connected to the BCM system using the fiber expansion module (FEM). The following table provides a cross-reference between market profiles and the Norstar trunk cartridges you can connect to the FEM.

Table 97 Norstar trunk cartridge availability, by market profile (Sheet 1 of 2)

Market profile	BRI S/T 2/4	BRI U2/4	Analog DID	Analog E&M	Analog CLID	Country-specific analog trunk card
Australia	✓					✓
Brazil	✓					
CALA	✓	✓		✓	✓	
Canada	✓	✓	✓	✓	✓	
Caribbean	✓	✓	✓	✓	✓	
Denmark	✓					

Table 97 Norstar trunk cartridge availability, by market profile (Sheet 2 of 2)

Market profile	BRI S/T 2/4	BRI U2/4	Analog DID	Analog E&M	Analog CLID	Country-specific analog trunk card
France	✓					✓
Germany	✓					✓
Global	✓			✓	✓	
Holland	✓					✓
Hong Kong	✓		✓	✓	✓	
Italy	✓					
Mexico	✓	✓		✓	✓	
New Zealand	✓					✓
North America	✓	✓	✓	✓	✓	
Norway	✓					
Poland	✓					✓
PRC	✓			✓	✓	
Spain	✓					
Sweden	✓					
Switzerland	✓					
Taiwan	✓		✓	✓	✓	
United Kingdom	✓					✓

Time zones and language information

This section provides information about time and date format and language support for Central America and South America.

Time and date format based on language

Time zones are based on the actual time zone where the BCM system is located. You can choose a compatible time zone from the Time Zone list in Element Manager. If your exact location is not on the list, choose the location with the time zone closest to you. Note that some time zones are individualized because they do not switch from Standard Time to Daylight Saving Time (for example, Saskatchewan).

The format of the time and date changes are based on the prime language of the market profile. Table 98 provides a list of formats based on language or country.

Table 98 Time/date formats based on language

Language/country	Time/date format
Danish	2001-01-01 13:57
Dutch	1 Jan 01 13:57
EuroFrench	1 jan 13:57
EuroSpanish Brazil	1 Ene 13:57
German	1 Jan 13:57
Italian	1 Gen 13:57
NA English	Jan 1 1:57 pm
NA French	2001-01-01 13:57
NA Spanish	Ene 1 1:57 pm
Norwegian	1 Jan 13:57
Swedish	2001-01-01 13:57
Turkish	1 Ock 13:57
UK English	1 Jan 1:57 pm

Language support for South America and Central America

Table 99 shows the language support for South American and Central American countries.

Table 99 South/Central America language support

Language	Country			
English	• Anguilla • Antigua • Aruba • Bahamas • Barbados • Belize	• Bermuda • Cayman Islands • Curacao • Dominica • Grenada • Guyana	• Montserrat • St. Kitts • St. Lucia • St. Maarten • St. Thomas • St. Vincent	• Suriname • Turks and Caicos • Trinidad • USVI
French	• Haiti			
Spanish	• Argentina • Bolivia • Chile • Columbia • Costa Rica	• Dominican Republic • El Salvador • Ecuador • Guatemala • Honduras	• Jamaica • Mexico • Nicaragua • Panama • Paraguay	• Puerto Rico • Peru • Uruguay • Venezuela
Portuguese	• Brazil			

Caller ID display formats

The Caller ID function is supported on telephones that provide a display window. Caller ID formats consist of the name and number of the calling party. For further information on compatible telephones and auxiliary equipment, refer to "Installing telephones and peripherals" on page 163.

The North America market profile supports the following format: 5554775 (613).

All other market profiles display the numbers in a continuous string of a maximum of 14 characters: 6135554775.

Core parameters for market profiles

The core parameters for the available market profiles are provided in the following tables (market profiles are listed in alphabetical order):

- Australia, Brazil, CALA, Canada, Caribbean, and Denmark (see Table 100)
- France, Germany, Global, Holland, Hong Kong, and Italy (see Table 101 on page 360)
- Mexico, New Zealand, North America, Norway, Poland, and PRC (see Table 102 on page 363)
- Spain, Sweden, Switzerland, Taiwan, and United Kingdom (see Table 103 on page 366)

Table 100 Australia, Brazil, CALA, Canada, Caribbean, and Denmark parameters (Sheet 1 of 4)

Functionality	Attribute	Market profile					
		Australia	Brazil	CALA	Canada	Caribbean	Denmark
Access codes	Direct dial digit	9	9	0	0	0	0
	Dest code for default route	0	0	9	9	9	9
Protocols	Digital trunking protocols	ISDN DASS2 DPNSS	ISDN DASS2 DPNSS	ISDN DASS2 DPNSS	ISDN	ISDN	ISDN DASS2 DPNSS
	BRI trunk protocol variants	ETSI-403 ETSI-QSIG	ETSI-403 ETSI-QSIG	ETSI-403 ETSI-QSIG	NI-2	NI-2	ETSI-403 ETSI-QSIG
	BRI S-loop protocol variant	ETSI-102	ETSI-102	ETSI-102	NI-2	NI-2	ETSI-102
	PRI trunk protocol variants	ETSI-403 ETSI-QSIG MCDN	ETSI-403 ETSI-QSIG MCDN	ETSI-403 ETSI-QSIG MCDN	NI-2 DMS100 DMS250 4ESS MCDN	NI-2 DMS100 DMS250 4ESS MCDN	ETSI-403 ETSI-QSIG MCDN
	Global analog trunk versions	GATM	GATM	GATM	GATM	GATM	N/A

Table 100 Australia, Brazil, CALA, Canada, Caribbean, and Denmark parameters (Sheet 2 of 4)

Functionality	Attribute	Market profile					
		Australia	**Brazil**	**CALA**	**Canada**	**Caribbean**	**Denmark**
Telephony feature settings	Conference tone supported	Yes	Yes	Yes	No	Yes	No
	Held line reminder	After 30 seconds	Off	Off	Off	Off	Off
	Delay ring transfer	After 15 rings	After 4 rings	After 4 rings	After 4 rings	After 4 rings	After 4 rings
	Transfer callback timeout	After 15 rings	After 4 rings	After 4 rings	After 4 rings	After 4 rings	After 4 rings
	Network callback	30	30	30	N/A	30	30
	Host delay (ms)	1000	1000	1000	1000	1000	1000
	Link time (ms)		300	600	600	600	600
	Target line if busy setting	Busy	Prime	Prime	Prime	Prime	Prime
System settings	Companding law	A-law	A-law	A-law	mu-law	mu-law	A-law
	DTI carrier type	E1	E1	E1	T1	T1	E1
	Number of rings in a cycle	2	1	1	1	1	1
	M7000 set supported	Yes	Yes	Yes	No	Yes	Yes
Hunt groups	Default delay	4 ring cycles	4 ring cycles	4 ring cycles	4 ring cycles	4 ring cycles	4 ring cycles
	Queue timeout	60 sec	60 sec	60 sec	60 sec	60 sec	60 sec
	If busy	Busy tone	Busy tone	Busy tone	Busy tone	Busy tone	Busy tone
	Mode	Sequential	Broadcast	Broadcast	Broadcast	Broadcast	Broadcast
Service times	Night	Start 17:00 End 08:00	Start 23:00 End 07:00	Start 23:00 End 07:00	Start 23:00 End 07:00	Start 23:00 End 07:00	Start 23:00 End 07:00
	Evening	Start 00:00 End 00:00	Start 17:00 End 23:00	Start 17:00 End 23:00	Start 17:00 End 23:00	Start 17:00 End 23:00	Start 17:00 End 23:00
	Lunch	Start 00:00 End 00:00	Start 12:00 End 13:00	Start 12:00 End 13:00	Start 12:00 End 13:00	Start 12:00 End 13:00	Start 12:00 End 13:00

Table 100 Australia, Brazil, CALA, Canada, Caribbean, and Denmark parameters (Sheet 3 of 4)

Functionality	Attribute	Market profile					
		Australia	**Brazil**	**CALA**	**Canada**	**Caribbean**	**Denmark**
Service modes	Ringing service mode	Off	Off	Off	Off	Off	Off
	Ringing service trunk ans	Yes	Yes	Yes	Yes	Yes	Yes
	Restriction service mode	Off	Off	Off	Off	Off	Off
	Restriction global overrides	000 131440	190	N/A	N/A	N/A	N/A
	Restriction filter 01	0(013), 1(13, 1800)	0, 1(1800, 1877, 1888), 911(911), 9411, 976, 1976, 1***976, 1900, 1***900, 5551212	0, 1(1800, 1877, 1888), 911(911), 9411, 976, 1976, 1***976, 1900, 1***900, 5551212	0, 1(1800, 1877, 1888), 911(911), 9411, 976, 1976, 1***976, 1900, 1***900, 5551212	0, 1(1800, 1877, 1888), 911(911), 9411, 976, 1976, 1***976, 1900, 1***900, 5551212	N/A
	Restriction filter 05	00, 1(13, 11, 1800)	N/A	N/A	N/A	N/A	N/A
	Restriction filter 06	*	N/A	N/A	N/A	N/A	N/A
	Routing service mode	Off	Off	Off	Off	Off	Off
	Routing service overflow	No	No	No	No	No	No
Public DN	Public DN lengths	Default(7)	Default(7), 0(11), 00(12), 01(17), 011(18), 1(11), 411(3), 911(3)	Default(7), 0(11), 00(12), 01(17), 011(18), 1(11), 411(3), 911(3)	Default(7), 0(11), 00(12), 01(17), 011(18), 1(11), 411(3), 911(3)	Default(7), 0(11), 00(12), 01(17), 011(18), 1(11), 411(3), 911(3)	Default(8), 00(17), 1(3), 16(5), 17(4), 18(4)
Public OLI	Unknown number length	N/A	Variable	Variable	N/A	N/A	Variable
	Local number length	8	Variable	Variable	7	7	Variable
	National number length	9	Variable	Variable	10	10	Variable
Set capabilities	Handsfree	Auto	Auto	Auto	Auto	Auto	Auto
	Pickup group	1	None	None	None	None	None
	Allow redirect	Enabled	Disabled	Disabled	Disabled	Disabled	Disabled
	Call forward delay	Disabled (4)	Disabled (4)	Disabled (4)	Disabled (4)	Disabled (4)	Disabled (4)

Table 100 Australia, Brazil, CALA, Canada, Caribbean, and Denmark parameters (Sheet 4 of 4)

Functionality	Attribute	Market profile					
		Australia	**Brazil**	**CALA**	**Canada**	**Caribbean**	**Denmark**
Note: The field for number of rings is hidden in default mode (disabled). When you enter a value for call forward delay, the field for number of rings becomes visible with the given default value.							
Dial tone detection		Enabled	Enabled	Enabled	Enabled	Enabled	Enabled
Set preferences	Language (first is default)	UK English VICAP	Portuguese English Spanish	Spanish English French	English French Spanish	English French Spanish	Danish English Norwegian Swedish
ONN blocking	Analog VSC (tone)	1831	None	None	None	None	None
	Analog VSC (pulse)	1831	None	None	None	None	None
	BRI VSC	None	None	None	None	None	None
	BRI per loop	SuprsBit	SuprsBit	SuprsBit	SuprsBit	SuprsBit	SuprsBit
Release reason	Release text	Simple	Simple	None	None	None	Simple
	Release code	On	On	Off	Off	Off	On
DTMF parameters	Tone duration	80 msec	120 msec	120 msec	120 msec	120 msec	120 msec
	Pause time	3.5 msec	1.5 msec	1.5 msec	1.5 msec	1.5 msec	1.5 msec
	Interdigit time	100 msec	80 msec	80 msec	80 msec	80 msec	80 msec

Table 101 France, Germany, Global, Holland, Hong Kong, and Italy parameters (Sheet 1 of 4)

Functionality	Attribute	Market profile					
		France	**Germany**	**Global**	**Holland**	**Hong Kong**	**Italy**
Access codes	Direct dial digit	9	9	0	0	0	9
	Dest code for default route	0	0	9	9	9	0
Protocols	Digital trunking protocols	ISDN DASS2 DPNSS	ISDN DASS2 DPNSS	ISDN DASS2 DPNSS	ISDN DASS2 DPNSS	ISDN DASS2 DPNSS	ISDN DASS2 DPNSS
	BRI trunk protocol variants	ETSI-403 ETSI-QSIG	ETSI-403 ETSI-QSIG	ETSI-403 ETSI-QSIG	ETSI-403 ETSI-QSIG	HKTA2015	ETSI-102 ETSI-QSIG
	BRI S-loop protocol variant	ETSI-102	ETSI-102	ETSI-102	ETSI-102	ETSI-102	ETSI-102
	PRI trunk protocol variants	ETSI-403 ETSI-QSIG MCDN	ETSI-403 ETSI-QSIG MCDN	ETSI-403 ETSI-QSIG MCDN	ETSI-403 ETSI-QSIG MCDN	HkTA2015 MCDN	ETSI-403 ETSI-QSIG MCDN
	Global analog trunk versions	N/A	N/A	GATM	N/A	GATM	N/A

Table 101 France, Germany, Global, Holland, Hong Kong, and Italy parameters (Sheet 2 of 4)

Functionality	Attribute	Market profile					
		France	**Germany**	**Global**	**Holland**	**Hong Kong**	**Italy**
Telephony feature settings	Conference tone supported	No	Yes	No	No	No	Yes
	Held line reminder	Off	Off	Off	Off	Off	Off
	Delay ring transfer	After 4 rings	After 4 rings	After 4 rings	After 4 rings	After 4 rings	After 4 rings
	Transfer callback timeout	After 4 rings	After 4 rings	After 4 rings	After 4 rings	After 4 rings	After 4 rings
	Network callback	30	30	30	30	N/A	30
	Host delay (ms)	1000	1000	1000	1000	1000	1000
	Link time (ms)	N/A	N/A	600	600	600	N/A
	Target line if busy setting	PBX > Busy DID > Prime	PBX > Busy DID > Prime	Prime	Prime	Prime	PBX > Busy DID > Prime
System settings	Companding law	A-law	A-law	A-law	A-law	mu-law	A-law
	DTI carrier type	E1	E1	E1	E1	T1	E1
	Number of rings in a cycle	2	2	1	1	1	2
	M7000 set supported	Yes	Yes	Yes	Yes	No	Yes
Hunt groups	Default delay	4 ring cycles	4 ring cycles	4 ring cycles	4 ring cycles	4 ring cycles	4 ring cycles
	Queue timeout	60 sec	60 sec	60 sec	60 sec	60 sec	60 sec
	If busy	Busy tone	Busy tone	Busy tone	Busy tone	Busy tone	Busy tone
	Mode	Sequential	Sequential	Broadcast	Broadcast	Broadcast	Sequential
Service times	Night	Start 23:00 End 07:00	Start 23:00 End 07:00	Start 23:00 End 07:00	Start 23:00 End 07:00	Start 23:00 End 07:00	Start 23:00 End 07:00
	Evening	Start 17:00 End 23:00	Start 17:00 End 23:00	Start 17:00 End 23:00	Start 17:00 End 23:00	Start 17:00 End 23:00	Start 17:00 End 23:00
	Lunch	Start 12:00 End 13:00	Start 12:00 End 13:00	Start 12:00 End 13:00	Start 12:00 End 13:00	Start 12:00 End 13:00	Start 12:00 End 13:00

Table 101 France, Germany, Global, Holland, Hong Kong, and Italy parameters (Sheet 3 of 4)

Functionality	Attribute	Market profile					
		France	Germany	Global	Holland	Hong Kong	Italy
Service modes	Ringing service mode	Manual	Manual	Off	Off	Off	Manual
	Ringing service trunk ans	Yes	Yes	Yes	Yes	Yes	Yes
	Restriction service mode	Off	Off	Off	Off	Off	Off
	Restriction global overrides	N/A	N/A	N/A	N/A	N/A	N/A
	Restriction filter 01	N/A	N/A	0, 1(1800, 1877, 1888), 911(911), 9411, 976, 1976, 1***976, 1900, 1***900, 5551212	N/A	00***, 170, 172, 173, 1747, 1760, 1761, 1766, 1770, 1771, 1772, 1775, 1778, 1783, 1788, 900	N/A
	Restriction filter 05	N/A	N/A	N/A	N/A	N/A	N/A
	Restriction filter 06	N/A	N/A	N/A	N/A	N/A	N/A
	Routing service mode	Off	Off	Off	Off	Off	Off
	Routing service overflow	No	No	No	No	No	No
Public DN	Public DN lengths	Default(25)	Default(25)	Default(7), 0(11), 00(12), 01(17), 011(18), 1(11), 411(3), 911(3)	Default(7)	Default(7), 0(11), 00(12), 01(17), 011(18), 1(11), 411(3), 911(3)	Default(25)
Public OLI	Unknown number length	Variable	Variable	Variable	Variable	Variable	Variable
	Local number length	Variable	Variable	Variable	Variable	Variable	Variable
	National number length	Variable	Variable	Variable	Variable	Variable	Variable
Set capabilities	Handsfree	Auto	Auto	Auto	Auto	Auto	Auto
	Pickup group	None	None	None	None	None	None
	Allow redirect	Disabled	Disabled	Disabled	Disabled	Disabled	Disabled
	Call forward delay	Disabled (4)	Disabled (4)	Disabled (4)	Disabled (4)	Disabled (4)	Disabled (4)

Table 101 France, Germany, Global, Holland, Hong Kong, and Italy parameters (Sheet 4 of 4)

Functionality	Attribute	Market profile					
		France	**Germany**	**Global**	**Holland**	**Hong Kong**	**Italy**
Note: The field for number of rings is hidden in default mode (disabled). When you enter a value for call forward delay, the field for number of rings becomes visible with the given default value.							
Dial tone detection		Enabled	Enabled	Enabled	Enabled	Enabled	Enabled
Set preferences	Language (first is default)	EuroFrench English	German English	English French Spanish Turkish	Dutch English EuroFrench	English French Spanish	Italian English
ONN blocking	Analog VSC (tone)	None	None	None	None	None	None
	Analog VSC (pulse)	None	None	None	None	None	None
	BRI VSC	None	None	None	None	None	None
	BRI per loop	SuprsBit	SuprsBit	SuprsBit	SuprsBit	SuprsBit	SuprsBit
Release reason	Release text	Simple	Detailed	Simple	Simple	None	Simple
	Release code	On	Off	On	On	Off	On
DTMF parameters	Tone duration	120 msec	120 msec	120 msec	120 msec	120 msec	120 msec
	Pause time	3.5 msec	3.5 msec	1.5 msec	1.5 msec	1.5 msec	3.5 msec
	Interdigit time	100 msec	100 msec	80 msec	80 msec	80 msec	100 msec

Table 102 Mexico, New Zealand, North America, Norway, Poland, and PRC parameters (Sheet 1 of 4)

Functionality	Attribute	Market profile					
		Mexico	**New Zealand**	**North America**	**Norway**	**Poland**	**PRC**
Access codes	Direct dial digit	0	0	0	9	0	0
	Dest code for default route	9	9	9	0	9	9

Table 102 Mexico, New Zealand, North America, Norway, Poland, and PRC parameters (Sheet 2 of 4)

Functionality	Attribute	Market profile					
		Mexico	**New Zealand**	**North America**	**Norway**	**Poland**	**PRC**
Protocols	Digital trunking protocols	ISDN DASS2 DPNSS	ISDN DASS2 DPNSS	ISDN	ISDN DASS2 DPNSS	ISDN DASS2 DPNSS	ISDN DASS2 DPNSS
	BRI trunk protocol variants	ETSI-403 ETSI-QSIG	ETSI-403 ETSI-QSIG	NI-2	ETSI-403 ETSI-QSIG	ETSI-403 ETSI-QSIG	ETSI-403 ETSI-QSIG
	BRI S-loop protocol variant	ETSI-102	ETSI-102 + BTNR191	NI-2	ETSI-102	ETSI-102	ETSI-102
	PRI trunk protocol variants	ETSI-403 ETSI-QSIG MCDN	ETSI-403 ETSI-QSIG MCDN	NI-2 DMS100 DMS250 4ESS MCDN	ETSI-403 ETSI-QSIG MCDN	ETSI-403 ETSI-QSIG MCDN	ETSI-403 ETSI-QSIG MCDN
	Global analog trunk versions	GATM	N/A	GATM	N/A	GATM	GATM
Telephony feature settings	Conference tone supported	No	Yes	No	No	Yes	No
	Held line reminder	Off	Immediate	Off	Off	After 30 seconds	Off
	Delay ring transfer	After 4 rings	After 4 rings	After 4 rings	After 4 rings	After 15 rings	After 4 rings
	Transfer callback timeout	After 4 rings	After 4 rings	After 4 rings	After 4 rings	After 15 rings	After 4 rings
	Network callback	30	30	N/A	30	30	30
	Host delay (ms)	1000	1000	1000	1000	1000	1000
	Link time (ms)	600	N/A	600	N/A		600
	Target line if busy setting	Prime	PBX > Busy DID > Prime	Prime	PBX > Busy DID > Prime	Busy	Prime
System settings	Companding law	A-law	A-law	mu-law	A-law	A-law	A-law
	DTI carrier type	E1	E1	T1	E1	E1	E1
	Number of rings in a cycle	1	2	1	2	2	1
	M7000 set supported	Yes	Yes	No	Yes	Yes	Yes
Hunt groups	Default delay	4 ring cycles	4 ring cycles	4 ring cycles	4 ring cycles	4 ring cycles	4 ring cycles
	Queue timeout	60 sec	60 sec	60 sec	60 sec	60 sec	60 sec
	If busy	Busy tone	Busy tone	Busy tone	Busy tone	Busy tone	Busy tone
	Mode	Broadcast	Sequential	Broadcast	Sequential	Sequential	Broadcast

Table 102 Mexico, New Zealand, North America, Norway, Poland, and PRC parameters (Sheet 3 of 4)

Functionality	Attribute	Market profile					
		Mexico	**New Zealand**	**North America**	**Norway**	**Poland**	**PRC**
Service times	Night	Start 23:00 End 07:00	Start 23:00 End 07:00	Start 23:00 End 07:00	Start 23:00 End 07:00	Start 23:00 End 08:00	Start 23:00 End 07:00
	Evening	Start 17:00 End 23:00	Start 17:00 End 23:00	Start 17:00 End 23:00	Start 17:00 End 23:00	Start 00:00 End 00:00	Start 17:00 End 23:00
	Lunch	Start 12:00 End 13:00	Start 12:00 End 13:00	Start 12:00 End 13:00	Start 12:00 End 13:00	Start 00:00 End 00:00	Start 12:00 End 13:00
Service modes	Ringing service mode	Off	Manual	Off	Manual	Off	Off
	Ringing service trunk ans	Yes	Yes	Yes	Yes	Yes	Yes
	Restriction service mode	Off	Off	Off	Off	Off	Off
	Restriction global overrides	N/A	999 112	N/A	N/A	112 990	N/A
	Restriction filter 01	0, 1(1800, 1877, 1888), 911(911), 9411, 976, 1976, 1***976, 1900, 1***900, 5551212	0(0800), 1	0, 1(1800, 1877, 1888), 911(911), 9411, 976, 1976, 1***976, 1900, 1***900, 5551212	N/A	N/A	0, 1(1800, 1877, 1888), 911(911), 9411, 976, 1976, 1***976, 1900, 1***900, 5551212
	Restriction filter 05	N/A	010, 1, 00	N/A	N/A	N/A	N/A
	Restriction filter 06	N/A	*	N/A	N/A	N/A	N/A
	Routing service mode	Off	Off	Off	Off	Off	Off
	Routing service overflow	No	No	No	No	No	No
Public DN	Public DN lengths	Default(7), 0(11), 00(12), 01(17), 011(18), 1(11), 411(3), 911(3)	Default(8), 0(11) 00(17), 1(3), 9(3)	Default(7), 0(11), 00(12), 01(17), 011(18), 1(11), 411(3), 911(3)	Default(25)	Default(7)	Default(7), 0(11), 00(12), 01(17), 011(18), 1(11), 411(3), 911(3)

Table 102 Mexico, New Zealand, North America, Norway, Poland, and PRC parameters (Sheet 4 of 4)

Functionality	Attribute	Market profile					
		Mexico	New Zealand	North America	Norway	Poland	PRC
Public OLI	Unknown number length	Variable	Variable	N/A	Variable	Variable	Variable
	Local number length	Variable	Variable	7	Variable	Variable	Variable
	National number length	Variable	Variable	10	Variable	Variable	Variable
Set capabilities	Handsfree	Auto	None	Auto	Auto	Auto	Auto
	Pickup group	None	None	None	None	0	None
	Allow redirect	Disabled	Disabled	Disabled	Disabled	Disabled	Disabled
	Call forward delay	Disabled (4)	Disabled (4)	Disabled (4)	Disabled (4)	Disabled (4)	Disabled (4)
Note: The field for number of rings is hidden in default mode (disabled). When you enter a value for call forward delay, the field for number of rings becomes visible with the given default value.							
Dial tone detection		Enabled	Enabled	Enabled	Enabled	Enabled	Enabled
Set preferences	Language (first is default)	English French Spanish Turkish	UKEnglish VICAP	English French Spanish	Norwegian English Swedish Danish	Polish EuroFrench English Czech	English French Spanish Turkish
ONN blocking	Analog VSC (tone)	None	141	None	None	1831	None
	Analog VSC (pulse)	None	141	None	None	1831	None
	BRI VSC	None	141	None	None	None	None
	BRI per loop	SuprsBit	SrvcCode	SuprsBit	SuprsBit	SuprsBit	SuprsBit
Release reason	Release text	Simple	Detailed	None	Simple	Simple	Simple
	Release code	On	Off	Off	On	On	On
DTMF parameters	Tone duration	120 msec	120 msec	120 msec	120 msec	110 msec	120 msec
	Pause time	1.5 msec	3.5 msec	1.5 msec	3.5 msec	1.5 msec	1.5 msec
	Interdigit time	80 msec	100 msec	80 msec	100 msec	80 msec	80 msec

Table 103 Spain, Sweden, Switzerland, Taiwan, and United Kingdom parameters (Sheet 1 of 4)

Functionality	Attribute	Market profile				
		Spain	Sweden	Switzerland	Taiwan	United Kingdom
Access codes	Direct dial digit	9	9	9	0	0
	Dest code for default route	0	0	0	9	9

Table 103 Spain, Sweden, Switzerland, Taiwan, and United Kingdom parameters (Sheet 2 of 4)

Functionality	Attribute	Market profile				
		Spain	**Sweden**	**Switzerland**	**Taiwan**	**United Kingdom**
Protocols	Digital trunking protocols	ISDN DASS2 DPNSS	ISDN DASS2 DPNSS	ISDN DASS2 DPNSS	ISDN DASS2 DPNSS	ISDN DASS2 DPNSS
	BRI trunk protocol variants	ETSI-403 ETSI-QSIG	ETSI-403 ETSI-QSIG	ETSI-403 ETSI-QSIG	ITU-T	ETSI-403 ETSI-QSIG
	BRI S-loop protocol variant	ETSI-102	ETSI-102	ETSI-102	ETSI-102	ETSI-102 + BTNR191
	PRI trunk protocol variants	ETSI-403 ETSI-QSIG MCDN	ETSI-403 ETSI-QSIG MCDN	ETSI-403 ETSI-QSIG MCDN	ITU-T MCDN	ETSI-403 ETSI-QSIG MCDN
	Global analog trunk versions	N/A	N/A	N/A	GATM	GATM
Telephony feature settings	Conference tone supported	No	No	No	No	Yes
	Held line reminder	Off	Off	Off	Off	Immediate
	Delay ring transfer	After 4 rings	After 4 rings	After 4 rings	After 4 rings	After 4 rings
	Transfer callback timeout	After 4 rings	After 4 rings	After 4 rings	After 4 rings	After 4 rings
	Network callback	30	30	30	N/A	30
	Host delay (ms)	1000	1000	1000	1000	1000
	Link time (ms)	N/A	600	N/A	600	N/A
	Target line if busy setting	PBX > Busy DID > Prime	Prime	PBX > Busy DID > Prime	Prime	PBX > Busy DID > Prime
System settings	Companding law	A-law	A-law	A-law	mu-law	A-law
	DTI carrier type	E1	E1	E1	T1	E1
	Number of rings in a cycle	2	1	2	1	2
	M7000 set supported	Yes	Yes	Yes	Yes	Yes
Hunt groups	Default delay	4 ring cycles	4 ring cycles	4 ring cycles	4 ring cycles	4 ring cycles
	Queue timeout	60 sec	60 sec	60 sec	60 sec	60 sec
	If busy	Busy tone	Busy tone	Busy tone	Busy tone	Busy tone
	Mode	Sequential	Broadcast	Sequential	Broadcast	Sequential

Table 103 Spain, Sweden, Switzerland, Taiwan, and United Kingdom parameters (Sheet 3 of 4)

Functionality	Attribute	Market profile				
		Spain	Sweden	Switzerland	Taiwan	United Kingdom
Service times	Night	Start 23:00 End 07:00	Start 23:00 End 07:00	Start 23:00 End 07:00	Start 23:00 End 07:00	Start 23:00 End 07:00
	Evening	Start 17:00 End 23:00	Start 17:00 End 23:00	Start 17:00 End 23:00	Start 17:00 End 23:00	Start 17:00 End 23:00
	Lunch	Start 12:00 End 13:00	Start 12:00 End 13:00	Start 12:00 End 13:00	Start 12:00 End 13:00	Start 12:00 End 13:00
Service modes	Ringing service mode	Manual	Off	Manual	Off	Manual
	Ringing service trunk ans	Yes	Yes	Yes	Yes	Yes
	Restriction service mode	Off	Off	Off	Off	Off
	Restriction global overrides	N/A	N/A	N/A	N/A	999 112
	Restriction filter 01	N/A	N/A	N/A	0, 1(1800, 1877, 1888), 911(911), 9411, 976, 1976, 1***976, 1900, 1***900, 5551212	0(0800), 1
	Restriction filter 05	N/A	N/A	N/A	N/A	010, 1, 00
	Restriction filter 06	N/A	N/A	N/A	N/A	*
	Routing service mode	Off	Off	Off	Off	Off
	Routing service overflow	No	No	No	No	No
Public DN	Public DN lengths	Default(25)	Default(11), 00(17), 01(10), 02(10), 020(9), 0200(10), 02000(7), 020000(10), 0201(10), 02010(9), 07(10), 071(11), 0718(10), 072(11), 077(11), 09(11), 1(3)	Default(25)	Default(7), 0(11), 00(12), 01(17), 011(18), 1(11), 411(3), 911(3)	Default(8), 0(11) 00(17), 1(3), 9(3)

Table 103 Spain, Sweden, Switzerland, Taiwan, and United Kingdom parameters (Sheet 4 of 4)

Functionality	Attribute	Market profile				
		Spain	**Sweden**	**Switzerland**	**Taiwan**	**United Kingdom**
Public OLI	Unknown number length	Variable	Variable	Variable	Variable	Variable
	Local number length	Variable	Variable	Variable	Variable	Variable
	National number length	Variable	Variable	Variable	Variable	Variable
Set capabilities	Handsfree	Auto	Auto	Auto	Auto	None
	Pickup group	None	None	None	None	None
	Allow redirect	Disabled	Disabled	Disabled	Disabled	Disabled
	Call forward delay	Disabled (4)	Disabled (4)	Disabled (4)	Disabled (4)	Disabled (4)
Note: The field for number of rings is hidden in default mode (disabled). When you enter a value for call forward delay, the field for number of rings becomes visible with the given default value.						
Dial tone detection		Enabled	Enabled	Enabled	Enabled	Enabled
Set preferences	Language (first is default)	Euro Spanish English Portuguese	Swedish English Norwegian Danish	German English EuroFrench Italian	English French Spanish	UKEnglish VICAP
ONN blocking	Analog VSC (tone)	None	None	None	None	141
	Analog VSC (pulse)	None	None	None	None	141
	BRI VSC	None	None	None	None	141
	BRI per loop	SuprsBit	SuprsBit	SuprsBit	SuprsBit	SrvcCode
Release reason	Release text	Simple	Simple	Simple	Simple	Detailed
	Release code	On	On	On	On	Off
DTMF parameters	Tone duration	120 msec	120 msec	120 msec	120 msec	120 msec
	Pause time	3.5 msec	1.5 msec	3.5 msec	1.5 msec	3.5 msec
	Interdigit time	100 msec	80 msec	100 msec	80 msec	100 msec

Global analog trunk parameters

This section contains information for the GATM4 and GATM8 MBMs. The information in the tables applies to downloaded profiles only; it is not applicable to DIP switch modes.

Global analog trunks are not supported in the following market profiles: Denmark, France, Germany, Holland, Italy, Norway, Spain, Sweden, and Switzerland.

For PRC and Hong Kong, analog trunks are available in North American DIP switch mode only.

The global analog trunk parameters are provided in the following tables:

- Localization, PSTN standards, and pulse dialing parameters (see Table 104)
- Transmission parameters (see Table 105 on page 371)
- Call supervision parameters (see Table 106 on page 372)
- On-hook caller ID, disconnect supervision, and message waiting parameters (see Table 107 on page 372)

Table 104 Localization, PSTN standards, and pulse dialing parameters (Sheet 1 of 2)

Market profile	Localized	PSTN standards	Pulse Dialing (ms)		
			Break time	Make time	Interdigit time
Australia	Yes	[1] AS/ACIF S003:2005 (2nd Edition) — Customer Access Equipment for Connection to a Telecommunications Network [2] AS/ACIF S002:2001 — Analogue interworking and non-interference requirements for Customer Equipment for connection to the Public Switched Telephone Network	85	15	860
Brazil	Yes	[1] Identification of the Calling Party for SPC With DTMF, 220-250-713. [2] Si3050 Global Voice/Data Direct Access Arrangement Specification.	66	34	800
CALA	No (North American based A-law)	N/A	60	40	700
Canada	Yes	N/A	60	40	700
Caribbean	Yes	N/A	60	40	700
Global	No (North American based A-Law)	N/A	60	40	700
Mexico	Yes	[1] Mexico general Specification, June 9, 1993	60	40	700
New Zealand	No (UK-based telephony with Australian tones)	N/A	66	34	740

Table 104 Localization, PSTN standards, and pulse dialing parameters (Sheet 2 of 2)

Market profile	Localized	PSTN standards	Pulse Dialing (ms)		
			Break time	Make time	Interdigit time
North America	Yes	N/A	60	40	700
Poland	Yes	[1] Polish ASS_1_v1.doc [2] ITU-T Telecommunication Standardization Sector of ITU Supplement2 Series E 01/94	66	33	700
Taiwan	Yes	[1] Technical Specifications for Terminal Equipment for Connection to Public Switched Telephone Network, PSTN01, September 27, 2001	66	33	800
United Kingdom	Yes	N/A	66	34	740

Table 105 Transmission parameters

Market profile	Transmission				
	PCM coding scheme	AC impedance	Loop length adjustment capability	Tx CO gain (short, medium, long)	Rx CO gain (short, medium, long)
Australia	A-law	220 Ω + (820 Ω || 120nF)	No	(N/A, 0, N/A)	(N/A, 6 dB, N/A)
Brazil	A-law	600 Ω/900 Ω	Yes	(-3 dB, 0, 0)	(0, 0, 3 dB)
CALA	A-law	600 Ω	Yes	(-3 dB, 0, 0)	(0, 0, 3 dB)
Canada	mu-law	600 Ω	Yes	(-3 dB, 0, 0)	(0, 0, 3 dB)
Caribbean	mu-law	600 Ω	Yes	(-3 dB, 0, 0)	(0, 0, 3 dB)
Global	A-law	600 Ω	No	(N/A, 3 dB, N/A)	(N/A, 3 dB, N/A)
Mexico	A-law	600 Ω	No	(N/A, 3 dB, N/A)	(N/A, 3 dB, N/A)
New Zealand	A-law	320 Ω + (1050 Ω || 230nF)	No	(N/A, 3 dB, N/A)	(N/A, 3 dB, N/A)
North America	mu-law	600 Ω	Yes	(-3 dB, 0, 0)	(0, 0, 3 dB)
Poland	A-law	600 Ω	No	(N/A, 3 dB, N/A)	(N/A, 3 dB, N/A)
Taiwan	u-law	600 Ω	Yes	(-3 dB, 0, 0)	(0, 0, 3 dB)
United Kingdom	A-law	320 Ω + (1050 Ω || 230nF	No	(N/A, 3 dB, N/A)	(N/A, 3 dB, N/A)

Table 106 Call supervision parameters

Market profile	Call supervision				
	Link/flash time (ms)	OSI time (ms)	Force on-hook time (ms)	Wetting time (ms)	Ring confirmation count (ms)
Australia	600	100	1600	0	150
Brazil	300	100	2000	N/A	256
CALA	600	100	1500	N/A	256
Canada	600	100	1600	N/A	256
Caribbean	600	100	1600	N/A	256
Global	600	100	1500	N/A	256
Mexico	600	100	1600	N/A	256
New Zealand	90	100	1600	15	200
North America	600	100	1600	N/A	256
Poland	500	500	1800	N/A	256
Taiwan	600	100	1600	0	256
United Kingdom	90	100	1600	15	200

Table 107 On-hook caller ID, disconnect supervision, and message waiting parameters (Sheet 1 of 2)

Market profile	On-hook caller ID		Disconnect supervision			Message waiting		
	FSK	DTMF (Start Digit, Stop Digit)	OSI	Busy tone	Line reversal	FSK	Voltage reversal	Stutter dial tone
Australia	Bellcore	Not supported	No	No	ROI and ROA	Supported	Not supported	Not supported
Brazil	Not supported	Not supported	No	No	No	Supported	Not supported	Not supported
CALA	Bellcore	Not supported	Yes	No	No	Supported	Not supported	Not supported
Canada	Bellcore	Not supported	Yes	No	No	Supported	Not supported	Not supported
Caribbean	Bellcore	Not supported	Yes	No	No	Supported	Not supported	Not supported
Global	Bellcore	Not supported	Yes	No	No	Supported	Not supported	Not supported
Mexico	ETSI	Not supported	No	Supported (425 Hz, 250 ms On/ 250 ms Off)	No	Supported	Not supported	Not supported
New Zealand	ETSI	Not supported	Yes (500ms UK Guarded Clear)	No	No	Supported	Not supported	Not supported

Table 107 On-hook caller ID, disconnect supervision, and message waiting parameters (Sheet 2 of 2)

Market profile	On-hook caller ID		Disconnect supervision			Message waiting		
	FSK	DTMF (Start Digit, Stop Digit)	OSI	Busy tone	Line reversal	FSK	Voltage reversal	Stutter dial tone
North America	Bellcore	Not supported	Yes	No	No	Supported	Not supported	Not supported
Poland	ETSI	Not supported	No	Supported in unsupervised mode (425 Hz, 500 ms On/ 500 ms Off)	Supported in supervised mode	Supported	Not supported	Not supported
Taiwan	ETSI	Supported (D, C)	No	Supported (480 + 620 Hz, 500 ms On/ 500 ms Off)	No	Supported	Not supported	Not supported
United Kingdom	ETSI	Not supported	Yes (500ms UK Guarded Clear)	No	No	Supported	Not supported	Not supported

GASM8 parameters

This section contains information for the GASM8 MBM.

Global analog stations are not supported in the following market profiles: Brazil, CALA, Denmark, France, Germany, Holland, Italy, Norway, PRC, Spain, Sweden, Switzerland, and Taiwan.

The GASM8 parameters are provided in the following tables:

- Localization, DIP switch settings, specifications, and transmission parameters (see Table 108)
- Loop interface and call supervision (see Table 109 on page 375)
- Dial pulse and DTMF parameters (see Table 110 on page 375)

Table 108 Localization, DIP switch settings, specifications, and transmission parameters (Sheet 1 of 2)

Market profile	Localized	DIP switch setting	Specifications	Transmission				
				Input source impedance	Reference impedance	Load impedance	Bi-directional gain	PCM coding scheme
Australia	Yes	Australia	TS 003 TCE2	300 Ω + (820 Ω | | 120 nF)			1.3 dB	CCITT A-law
Canada	Yes	North America	Refer to North America spec	600 Ω			3 dB	CCITT mu-law
Caribbean	Yes	North America	Refer to North America spec	600 Ω			3 dB	CCITT mu-law

Table 108 Localization, DIP switch settings, specifications, and transmission parameters (Sheet 2 of 2)

Market profile	Localized	DIP switch setting	Specifications	Transmission				
				Input source impedance	Reference impedance	Load impedance	Bi-directional gain	PCM coding scheme
Global	No (North American based A-law)	North America	N/A	600 Ω			3 dB	CCITT A-law
Hong Kong	No (North American based mu-law)	North America	N/A	600 Ω			3 dB	CCITT mu-law
Mexico	No (North American based A-law)	North America	N/A	600 Ω			3 dB	CCITT A-law
New Zealand	No (UK-based telephony with Australian tones)	UK	N/A	300 Ω + (1000Ω || 220 nF)			1.8 dB	CCITT A-law
North America	Yes	North America	EIA/TIA-464A T512.1 T512.2	600 Ω			3 dB	CCITT mu-law
Poland	Yes	Poland	[1] Polish ASS_1_v1.doc [2] Technical Requirements for Private Automatic Branch Exchanges. Reference Analog interfaces11.doc	600 Ω			0dB for Rx -7dB for Tx	CCITT A-law
United Kingdom	Yes	UK	BS 6450 Part 4 BTNR 1080 EN 41003 Annex D BS 6305 BTNR 315	300 Ω + (1000 Ω || 220 nF)			1.8 dB	CCITT A-law

Table 109 Loop interface and call supervision parameters

Market profile	Loop interface			Call supervision			
	Loop current limit	Ringing frequency	Ringing amplitude	Min. seize duration	Min answer duration	Min/max recall duration	Min clear duration
Australia	32 mA	25 Hz	65 Vrms	200 ms	50 ms	30/150 ms	1500 ms
Canada	32 mA	20 Hz	65 Vrms	200 ms	25 ms	250/1100 ms	1400 ms
Caribbean	32 mA	20 Hz	65 Vrms	200 ms	25 ms	250/1100 ms	1400 ms
Global	32 mA	20 Hz	65 Vrms	200 ms	25 ms	250/1100 ms	1400 ms
Hong Kong	32 mA	20 Hz	65 Vrms	200 ms	25 ms	250/1100 ms	1400 ms
Mexico	32 mA	20 Hz	65 Vrms	200 ms	25 ms	250/1100 ms	1400 ms
New Zealand	32 mA	25 Hz	65 Vrms	200 ms	50 ms	25/150 ms	1500 ms
North America	32 mA	20 Hz	65 Vrms	200 ms	25 ms	250/1100 ms	1400 ms
Poland	32 mA	25 Hz	65 Vrms	180 ms	80 ms	51/88 ms	550 ms
United Kingdom	32 mA	25 Hz	65 Vrms	200 ms	50 ms	25/150 ms	1500 ms

Table 110 Dial pulse and DTMF parameters

Market profile	Dial pulse				DTMF	
	Dial pulse coding scheme	Min/max break duration	Min/max make duration	Min interdigit pause duration	DTMF coding scheme	Min DTMF detect level
Australia	N	25/120 ms	10/90 ms	250 ms	16 digits	-25 dB
Canada	N	25/120 ms	10/90 ms	250 ms	12 digits	-25 dB
Caribbean	N	25/120 ms	10/90 ms	250 ms	12 digits	-25 dB
Global	N	25/120 ms	10/90 ms	250 ms	12 digits	-25 dB
Hong Kong	N	25/120 ms	10/90 ms	250 ms	12 digits	-25 dB
Mexico	N	25/120 ms	10/90 ms	250 ms	12 digits	-25 dB
New Zealand	N	15/200 ms	15/200 ms	200 ms	16 digits	-25 dB
North America	N	25/120 ms	10/90 ms	250 ms	12 digits	-25 dB
Poland	N	51/88 ms	25/48 ms	150 ms	12 digits	-29 dB
United Kingdom	N	15/200 ms	15/200 ms	200 ms	16 digits	-25 dB

ISDN line services

Table 111 shows the ISDN private network services that are supported by BCM 4.0. Table 112 shows the network-based ISDN supplementary services and the features available for each.

Table 111 ISDN line services

MCDN over PRI (SL-1)	DPNSS	DASS2	ETSI QSIG
• Basic call • DDI • Name display • Number display • Centralized voice mail • Camp-on • ISDN call connection limit • Network call transfer • Break-in • Trunk route optimization (TRO) • Trunk anti-tromboning	• Basic call • DDI • Diversion • Redirection • Centralized voice mail • Call offer • Loop avoidance • Executive intrusion • Three party • Route optimization	• Basic call • DDI • Originating line identity (OLI) • Terminating line identity (TLI) • Call charge indication (CCI) • Call charge rate indication (CCRD)	• Basic call • DDI • Name display • Number display

Table 112 ISDN services by protocol

Protocol	Market profile		Available ISDN services	
• NI	• Canada • Caribbean	• North America	• Basic call • DID • Name display	• Number display • ONN blocking
• ETSI Euro	• Australia • Brazil • CALA • Denmark • France • Germany • Global • Holland • Hong Kong • Italy	• Mexico • New Zealand • Norway • Poland • PRC • Spain • Sweden • Switzerland • Taiwan • United Kingdom	• Basic call • DDI • Subaddressing (on S-loop) • ETSI call diversion (partial rerouting)	• AOC-E (specific changes for Holland and Italy) • MCID • CLIP • COLP • CLIR

Analog and digital trunk types

Table 113 provides a description of the types of analog and digital trunks.

Note that some of the analog and digital trunks are available only when you select specific market profiles.

Table 113 Analog and digital trunk types and descriptions (Sheet 1 of 2)

Trunk types	Description
Digital trunk types:	
T1/E1	Digital line that carries data on 24 channels at 1.544 Mb/s (North America); 30 channels at 2,048 Mb/s (Europe) Loop, E&M, DID, and ground start lines are also versions of T1 lines. You can program auto-answer T1 loop start, T1 E&M trunks, T1 DID, T1 ground start trunks, PRI and IP trunks to map to target lines to provide for attendant bypass (calling directly to a department or individual) and line concentration (one trunk can map onto several target lines).
DID	A type of T1 trunk line that allows an outside caller to dial directly into a line on the BCM system.
Loop	A type of T1 line that is used on systems where the service provider supports disconnect supervision for the digital loop start trunks. These trunks provide remote access to the BCM system from the public network. These trunks must have disconnect supervision to allow the trunk to be set to auto-answer, which provides the remote access portal.
Ground	T1-groundstart trunk. These lines offer the same features as loop start trunks, but are used when the local service provider does not support disconnect supervision for digital loop start trunks. Ground start trunks work with T1 only. By configuring lines as ground start, the system recognizes when a call is released at the far end.
E&M	T1 and E&M. This type of trunk line is used to create simple network connections to other phone systems. This trunk always operates in a disconnected supervised mode.
PRI	ISDN interface with 23 B channels and 1 D channel at 1.544 Mb/s (in Europe: 30 B-channels and 1 D-channels at 2.048 Mb/s). These lines give you incoming and outgoing access to an ISDN network and are auto-answer trunks.
BRI	ISDN loop that provides both T and S reference point loops. These loops can support both network (T and S loops) and terminal equipment (S-Loop) connections. This type of line provides incoming and outgoing access to an ISDN network. ETSI ISDN BRI is the European Telecommunications Standards Institute specification for BRI ISDN service. BRI provides two bearer B-channels operating at 64 Kb/s and a data D-channel which operates at 16 Kb/s. The D-channel is used primarily to carry call information. Like loop start trunks, BRI lines can be configured as manual-answer or auto-answer.
DASS2	(British) Trunk provides multiline IDA interconnection to the British Telecom network.

Table 113 Analog and digital trunk types and descriptions (Sheet 2 of 2)

Trunk types	Description
DPNSS	A digital private network signaling system, which allows phone systems from different manufacturers to be tied together over E1 lines, offering significant enhancements to BCM networking capabilities. DPNSS makes it easier to support centralized network functionality within private networks for operators and attendants dealing with large numbers of calls. Its routing capabilities provide more of the larger-network capabilities without the expense of installing a new system, reconfiguring all the nodes, and worrying about a lot of downtime. Most functionality over DPNSS lines is transparent once the DPNSS is programmed into the system. DPNSS allows a local node, acting as a terminating node, to communicate with other PBXs over the network using E1 lines. For example, corporate offices separated geographically can be linked over DPNSS lines to other BCM systems, bypassing the restrictions of the PSTNs to which they may be connected. This allows connected BCM systems to function like a private network.
Analog trunk types:	
Loop start	Standard PSTN telephone line.

Index

Numbers

1120E
IP Phone description 75
1140E
IP Phone description 75
2001
IP Phone description 76
2002
IP Phone description 76
2004
IP Phone description 76
2007
IP Phone description 76
2033
audio conferencing unit 76
2050
IP Phone description 76
2210,2211,2212
WLAN overview 76
4x16
default DNs 346
default line numbers 346
dip switch settings 116, 119, 121, 128
overview 60
wiring chart 345
7208 74
7406 telephone overview 75

A

accessories
ATA2 163
CAP 164
adapters,telephones 74
adding new extensions 110
American Society of Composers, Authors and Publishers, music-on-hold licence 22
analog device specifications
ATA2, ASM8, GASM, and GASI 61
analog equipment, ATA2 163
analog extensions 110
analog port termination 173
analog station media bay module, ASM8/ASM8+/GASM8 60
analog station modules 59
analog telephone
ASM8/ASM8+/GASM8 modules 60
analog terminal adapter 2, see ATA2 77
analog trunk media bay module 57, 58
ASM
default DN 351
description 60
dip switch settings 119, 121
wiring chart 351
ASM switch settings 130
ATA2
data communication 170
data transmission requirements 170
insertion loss measurement 172
installing 163
maximum loss 172
mounting on wall 171
overview 77
power source 171
audio conferencing unit overview 76
automatic telephone relocation 168
auxiliary jack 57

B

backups, maintenance warning 255
base unit
replacing the hard disk 256
BCM power supply 65
BCM200 main unit 34
BCM400 expansion gateway 64
BCM400 main unit 36
BCM400 redundant power supply 66
BRI
dip switch settings 119, 121, 125
line types 377
BRIM
default line numbers 340
overview 57
wiring chart 339
bus numbers, DS30 channel hierarchy 116

C

caller ID
by region 357
internal lines 58
CAP
installing 164
SAPS cable 77
Central America, supported languages 356
chassis ground 159
clear to send 159
configuration
Element Manager 195
overview 186
Telset Admin 189
configuring the BCM system 185
connecting, WAN card 159
conventions, guide 29
cooling fan
description 70
copyright 2
copyright, music source 22
cordless
7406 75
cordless telephones
digital mobility phones overview 76
CTM
4x16 settings 128
dip switch settings 119, 121, 125
overview 57

D

data carrier detect 159
data devices, using ATA 2 170
data networking, modem card 50
data set ready 159
data terminal ready 159, 160
data transmission requirements, ATA2 170
DB25 connector 159
DDIM
overview 63
dedicated cable 77
default gateway
LAN DHCP scope 201
digital extensions 110
digital lines, 4x16 58
digital mobility
handset overview 76
digital station media bay module 58
digital trunk module
DTM 56
digitizing analog equipment, ATA2 163
dip switch settings
ASM, GASM8 130
BRI 125
CTM 125
DSM 132
DTM 123
FEM settings 135
GATM 127
offset 112
DN
ASM dip switch settings 130
DSM switch settings 133, 134
DNs
default on 4x16 346
default on ASM 351
default on DSM16 349
default on DSM32 349
dip switch settings 123
see also extensions
DS30 channels
ASM switch settings 130
BRI switch settings 125
CTM switch settings 125
dip switch settings 119, 121
DSM switch settings 132
DTM switch settings 123
hierarchy 116
offset configurations 112
sharing offsets 113
DSM
4x16 settings 128
dip switch settings 119, 121, 132
overview 59
DSM 16/DSM 32 (digital station module) 59
DSM16
default DNs 349
wiring chart 349
DSM32
default DNs 349
wiring chart 349
DTM
default line numbers 337
description 56

dip switch settings 119, 121, 123
North American PRI settings 123
wiring chart 337

E

electrical requirements 90
emergency telephone
analog auxiliary jack 57
installing 167
environment
standards and specifications 24
environmental requirements 89
ETSI specifications 24
expansion unit 51
installing 103
extensions
dip switch settings 123
number required 110
see also DNs 123
external clock 159
external equipment, safety warning 33, 44
external line isolation units (LIU), MSC jacks 33, 44
external paging, amplifier 44

F

fax
auxiliary jack 57
FCC
registration 23
RF interference 23
FEM
dip switch settings 135
DS30 channel requirements 115
fiber ports 135
overview 63
fiber ports, FEM module 135
field replaceable units
description 71
final configuration 213
flashing LED 219
FRU
description 71
future expansion 110

G

GASM8 switch settings 130
GATM
default line numbers 341, 342
dip switches 127
overview 58
wiring chart 341
green LED 219

H

handset
standards and specifications 24
hard disk
backup warning 255
description 68
initialization 264, 266
replacement 256
hardware
overview 33
tools warning 256

I

Industry Canada
registration 23
initial installation 213
insertion loss 173
insertion loss measurement 172
install
ATA2 163
CAP 164
emergency telephone 167
installation overview 85
installing
telephones and peripherals 163
installing expansion unit 103
installing main unit 93
equipment rack 94
flat surface 100
wall-mount 98
international components 74
IP Phone
1120E 75
1140E 75
2001 76
2002 76
2004 76
2007 76
2050 76
IP telephone
wireless LAN overview 76
ISDN

line services, by region 376

J

jack
external paging 44
page relay 44

L

language
South and Central America 356
lease time
LAN DHCP scope 202
LED
BRIM 84
DTM 82
expansion unit 81
MBM 81
LEDs
media bay modules 219
off 219
others 220
licence, music-on-hold 22
line
BRI and PRI line types 377
line numbers
default on 4x16 346
default on BRIM 340
default on DTM 337
default on GATM 341, 342
line services
ISDN support, by region 376
lines
BRI and PRI line types 377
module dip switch settings 123

M

main unit
BCM200 34
BCM200, BCM400 33
BCM400 36
installing 93
installing equipment rack 94
maintenance
maintain backups 255
maximum loss, ATA2 172
MBM
4x16 60
BRIM 57
configuring 214
CTM 57
DDIM 63
default DNs 346, 351
default line numbers 337, 340, 342, 346
DTM 56
FEM 63
FEM,DDIM 63
GATM 58
overview 54
replacing 251
specialized 63
wiring chart 337, 339, 341, 345, 349, 351
media bay module, see MBM 54
media bay modules
4x16 settings 128
availability by regions 353
BRI dip switch settings 125
CTM dip switch settings 125
DS30 channel hierarchy 116
DSM dip switch settings 132
DTM dip switch settings 123
FEM settings 135
LEDs 219
offset configurations 119, 121
switch offsets 112
system capacity 111
media services card, see MSC 43
memory button
7000 74
7100 74
7208 74
7316 74
7316E 75
7316E+KIM 75
modem card
auxiliary jack 57
backup to integrated QoS routing 50
internal, V.90 interface 50
modules
DS30 channel hierarchy 116
offset configurations 119, 121
moving telephones 168
MSC
description 43
music source
permission 22
music-on-hold
copyright 22

N

network
equipment registration 23
networking
connecting WAN 159
modem card 50
WAN card 48
numbers of extensions 110

O

offset 112
offset configurations 119, 121
one-line display
7100 74
7208 74
output jack 44

P

page, external paging amplifier 44
paging 44
external output jack description 44
relay jack description 44
PCI
MSC description 43
peripherals
ATA2 163
CAP 164
ports
FEM fiber ports 135
power 219
power outage, emergency phone jack 57
power supply adapter cord 68
PRI
line types 377
process map
hard disk replacement 256
programming
moving telephones 168
protective ground 159
PSTN
service provider 107

Q

QoS routing
modem card, backup 50

R

radio-frequency interference 23
RAID upgrade kit
description 69
receive clock 159
receive data 159
red LED 219
regions
caller ID 357
ISDN line services support 376
modules 353
system defaults 357
regulatory information 2
related publications 31
relay jack
external paging 44
repair
authorization 23
replace
hard disk 256
replacing
MBM 251
power supply 277
request to send 159
RF interference 23
RJ-45 jack 144
RJ-48C jack 159

S

safety extra low voltage (SELV)
external equipment 33, 44
scope status
LAN DHCP scope 202
signal ground 159
signal ground/common return 159
South America, supported languages 356
specialized media bay modules 63
specifications
ATA2, ASM8, GASM, and GASI 61
system standards 24
startup profile 207
basic parameters 207
station auxiliary power supply, see SAPS 77
station media bay module
4x16 combination module 60

ASM8/ASM8+/GASM8 modules 60
DSM 16/DSM 32 59
station media bay modules 58
station modules
DSM switch settings 132
overview 58
rules for assigning 116
status 219
symbols 29
system capacity 111
system defaults, by region 357

T

T1
network interface card 48
telephone
wireless LAN overview 76
telephones
7000 74
7100 74
7208 74
7316 74
7316E 75
7316E+KIM 75
7406 75
ATA2 163
audio conferencing unit (ACU) 76
CAP 164
digital mobility overview 76
emergency 167
moving 168
telephones,adapters 74
Telset Admin
basic parameters 189
termination, analog port 173
time zones, by country 355
tools
shock warning 256
trademarks 2
transmit clock 159
transmit data 159
trunk modules
BRIM 57
CTM4/CTM8 57
DTM 56
GATM4/GATM8 58
rules for assigning 116
two-line display
7316 74
7316E 75
7316E+KIM 75

U

Uninterruptable power supply 68

W

WAN
media services card 48
wiring 159
wide area network, see WAN 159
WINS server
LAN DHCP scope 201
wire color 146, 151, 341, 342, 346, 349, 351
wireless LAN
handset overview 76
wiring
WAN card 159
wiring chart
4x16 345
ASM 351
BRIM 339
DSM16 349
DSM32 349
DTM 337
GATM 341
wiring requirements 90