Nortel Networks Multiservice Switch 7400

Hardware Description

NN10600-170

Multiservice Switch 7400

Hardware Description

Publication: NN10600-170
Document status: Standard
Document version: 6.1S2
Document date: November 2004

Copyright © 2004 Nortel Networks.
All Rights Reserved.

Printed in Canada.

NORTEL, NORTEL NETWORKS, the globemark design, the NORTEL NETWORKS corporate logo, DPN, DPN-100 and PASSPORT are trademarks of Nortel Networks.
AMP, MATE-N-LOK, and Z-PACK are trademarks of Tyco Electronics of Canada, Ltd.

Publication history

November 2004

6.1S2 Standard
General availability. Contains information on Nortel Networks Multiservice Switch 7400 for the PCR6.1 release.

Contents

About this document **37**

Who should read this document and why 37

What you need to know 37

How this document is organized 38

What's new in this document 38

4-port 10/100BaseT Ethernet FP 41

8-port 10/100BaseT Ethernet FP 41

CP support and CP/VPNXc warm standby equipment protection 41

Multiservice Switch 7460 42

32-port DS1 and E1 MSA 1-slot FPs 42

Related documents 44

Notational conventions 44

Drawing conventions 45

How to get more help 45

Chapter 1
Processor cards **47**

Locks on cards 48

Dimensions and weights 49

Line rate, port configuration, and clocking 49

Line rate 49

Port configuration 49

Clocking 50

Function processor cards 50

Control processor cards 51

Blank processor cards 51

Chapter 2
Termination and sparing panels 53
Termination panel formats 53
Termination panel functions 54
Termination panel dimensions and weights 56
Termination panel sparing function 57
Sparing panel dimensions and weights 58
Power for a sparing panel 58
Termination panel types 59
Ethernet termination panels 60
V.11 termination panels 63
V.35 termination panels 64
DS1 or E1 termination panels 65
DS3 or E3 termination panels 66
DS3, E3, or JT2 ATM termination panels 68
E1 unbalanced termination panels 71
MSA32 E1 unbalanced BNC termination panel 72
MSA32 DS1 or E1 termination panels 73
2-port STM-1 electrical 1:1 sparing panel 77
BITS termination panel 80
Sparing panel compliance with standards 83
Compliances of the 2-port STM-1e one-for-one sparing panel (NTPS92AA) 83

Chapter 3
Cables 89
Cable description 90
Cable considerations 90
Function processor cable assemblies 91

Chapter 4
Multiservice Switch 7420 95
Multiservice Switch 7420 shelf assembly 95
Multiservice Switch 7420 dimensions and weights 97
Multiservice Switch 7420 configurations 98
Multiservice Switch 7420 termination panels 100

Multiservice Switch 7420 environmental requirements 100
Thermal engineering 101
Multiservice Switch 7420 ventilation and access clearances 102
Noise levels 102
Multiservice Switch 7420 dc power source requirements 103
Multiservice Switch 7420 dc power input and wiring requirements 103
Multiservice Switch 7420 grounding requirements 104
Multiservice Switch 7420 cabling requirements 105
Compliance to electrical and safety standards 105
Multiservice Switch 7420 standards compliances 105

Chapter 5
Multiservice Switch 7440 107

Multiservice Switch 7440 shelf assembly 108
Multiservice Switch 7440 dimensions and weights 109
Multiservice Switch 7440 hardware configurations 110
Multiservice Switch 7440 termination panels 111
Multiservice Switch 7440 environmental requirements 116
Thermal engineering 117
Multiservice Switch 7440 ventilation and access clearances 117
Noise levels 119
Multiservice Switch 7440 processor card and power requirements 119
Multiservice Switch 7440 power supply locks 119
Multiservice Switch 7440 ac power source requirements 119
Multiservice Switch 7440 ac power input requirements 120
Multiservice Switch 7440 ac power cords 121
North American power cord specifications 121
European power cord specifications 121
Multiservice Switch 7440 dc power source requirements 122
Multiservice Switch 7440 dc power input and wiring requirements 122
Multiservice Switch 7440 grounding requirements 123
Multiservice Switch 7440 cabling requirements 124
Multiservice Switch 7440 alarms 125

Compliance to electrical and safety standards 126
Multiservice Switch 7440 standards compliances 126

Chapter 6
Multiservice Switch 7460 129

Multiservice Switch 7460 shelf assembly 130
Multiservice Switch 7460 dimensions and weights 131
Multiservice Switch 7460 dc shelf assembly 133
Multiservice Switch 7460 hardware configurations 133
Multiservice Switch 7460 termination panels 135
Multiservice Switch 7460 environmental requirements 138
Multiservice Switch 7460 ventilation and access clearances 139
Airflow velocity 139
Multiservice Switch 7460 dc power source requirements 139
Multiservice Switch 7460 dc power input and wiring requirements 140
Multiservice Switch 7460 grounding requirements 142
Multiservice Switch 7460 alarms 142
Door alarm 142
Rack-mounted Alarm panel or Power and Alarm panel 143
External alarms 143
Pinout information for alarm connectors 145
Multiservice Switch 7460 standards compliances 146
Compliance to electrical and safety standards 147

Chapter 7
Multiservice Switch 7480 149

Multiservice Switch 7480 shelf assembly 150
Multiservice Switch 7480 dimensions and weights 151
Multiservice Switch 7480 ac and dc shelf assemblies 153
Multiservice Switch 7480 configurations 154
Multiservice Switch 7480 termination panels 158
Multiservice Switch 7480 environmental requirements 163
Multiservice Switch 7480 ventilation and access clearances 165
Airflow velocity 166
Noise levels 167

Multiservice Switch 7480 thermal engineering guidelines 167
Temperature impact of slot position in a Multiservice Switch 7480 167
Temperature considerations for Media Gateway configurations 168
Temperature impact of system configurations 169
Air inlet and outlet temperatures 169
Multiservice Switch 7480 processor card requirements 170
Multiservice Switch 7480 ac power source requirements 170
Multiservice Switch 7480 ac power input requirements 170
Multiservice Switch 7480 ac power cords 171
North American power cord specifications 172
European power cord specifications 172
Multiservice Switch 7480 dc power source requirements 172
Multiservice Switch 7480 dc power input and wiring requirements 173
Multiservice Switch 7480 grounding requirements 174
Multiservice Switch 7480 ac grounding scheme 175
Multiservice Switch 7480 dc grounding scheme 177
Multiservice Switch 7480 alarms 179
External alarms 180
Pinout information for alarm connectors 181
Multiservice Switch 7480 shelf interconnect cable 184
Compliance to electrical and safety standards 184
Multiservice Switch 7480 standards compliances 184

Chapter 8
Multiservice Switch cabinet 187
Locks on cabinets 187
Cabinet dimensions and weights 188
Cabinet alarm connectors 189
Cabinet environmental requirements 192

Chapter 9
Seismic cabinet 193
Seismic cabinet dimensions and weights 193

Configured cabinet weight 195
Termination panels in a seismic cabinet 196
Multiservice Switch 7420 heat dissipation in a seismic cabinet 197
Multiservice Switch 7440 heat dissipation in a seismic cabinet 197
Multiservice Switch 7460 heat dissipation in a seismic cabinet 197
Multiservice Switch 7480 heat dissipation in a seismic cabinet 198
Grounding requirements for a seismic cabinet 198
Network equipment building standards (NEBS) compliances 198

Chapter 10
Control processors 199

Control processor features 199
Control processor components 200
Control processor faceplates 201
BITS Termination panels 204
Ethernet 10BASE-T connector pinouts 204
V.24 connector pinouts 204
DS1 or E1 BITS connector pinouts 205
Line rate 206
Compliance with standards 206
Ethernet compliance with standards 206

Chapter 11
DS1 function processors 207

1-port DS1 voice function processor 208
1-port DS1 voice faceplate 208
1-port DS1 voice termination panels 210
1-port DS1 voice cable assembly 210
1-port DS1 voice pinouts 210
1-port DS1 MVP-E function processor 212
1-port DS1 MVP-E faceplate 212
1-port DS1 MVP-E termination panels 213
1-port DS1 MVP-E cable assembly 214
1-port DS1 MVP-E pinouts 214
4-port DS1 MVP-E 216
4-port DS1 MVP-E faceplate 216

4-port DS1 MVP-E termination panels 217
4-port DS1 MVP-E cable assembly 218
4-port DS1 MVP-E pinouts 218
3-port DS1 ATM function processor 221
3-port DS1 ATM faceplate 221
3-port DS1 ATM termination panels 222
3-port DS1 ATM cable assembly 223
3-port DS1 ATM pinouts 223
4-port DS1 AAL1 function processor 226
4-port DS1 AAL1 faceplate 226
4-port DS1 AAL1 termination panels 228
4-port DS1 AAL1 cable assembly 228
4-port DS1 AAL1 pinouts 229
8-port DS1 ATM function processor 231
8-port DS1 ATM faceplate 231
8-port DS1 ATM termination panels 233
8-port DS1 ATM cable assembly 233
8-port DS1 ATM pinouts 234
4-port DS1 frame relay function processor 238
4-port DS1 frame relay faceplate 238
4-port DS1 frame relay termination panels 240
4-port DS1 frame relay cable assembly 240
4-port DS1 frame relay pinouts 240
4-port DS1C function processor 243
4-port DS1C faceplate 243
4-port DS1C termination panels 245
4-port DS1C cable assembly 245
4-port DS1C pinouts 245
8-port DS1 function processor 248
8-port DS1 faceplate 248
8-port DS1 termination panel 250
8-port DS1 cable assembly 250
8-port DS1 pinouts 250
32-port DS1 MSA 1-slot function processors 255
32-port DS1 MSA 1-slot faceplate 256

32-port DS1 MSA 1-slot and 2-slot FP replacements 257
32-port DS1 MSA 1-slot and 2-slot FP sparing combinations 258
32-port DS1 MSA termination panels for 1-slot FPs 259
32-port DS1 MSA prefabricated cable assemblies for FPs and sparing panels 260
32-port DS1 MSA custom-made cable assemblies for FPs and sparing panels 268
32-port DS1 MSA 1-slot FP pinouts 269
32-port DS1 MSA termination panel pinouts for CPE connections 274
32-port DS1 MSA 2-slot function processors 277
32-port DS1 MSA 2-slot faceplates 278
32-port DS1 MSA 2-slot FP replacements 281
32-port DS1 MSA 2-slot FP sparing combinations 281
32-port DS1 MSA termination panels for 2-slot FPs 281
32-port DS1 MSA cable assemblies for a 2-slot FP and sparing panel 282
32-port DS1 MSA 2-slot FP pinouts 283
32-port DS1 MSA termination panel pinouts for CPE connections 292
OC-3 cable assembly for optical ports on a 32-port DS1 MSA 2-slot FP 292
OC-3 line automatic protection switching on a 32-port DS1 MSA 2-slot FP 293
OC-3 interface characteristics on a 32-port DS1 MSA 2-slot FP 293
Connecting to OC-3 ports on a 32-port DS1 MSA 2-slot FP 295

Chapter 12
DS3 function processors 297

1-port DS3 function processor 297
1-port DS3 faceplate 298
1-port DS3 termination panels 300
1-port DS3 cable assembly 300
1-port DS3 pinouts 300
Trunk facility requirements 301
1-port DS3C function processor 301

1-port DS3C faceplate 302
1-port DS3C termination panels 304
1-port DS3C cable assembly 304
1-port DS3C pinouts 305
2-port DS3C TDM function processor 305
2-port DS3C TDM faceplate 306
2-port DS3C TDM termination panels 308
2-port DS3C TDM cable assembly 308
3-port DS3 ATM function processor 308
3-port DS3 ATM faceplate 308
3-port DS3 ATM termination panels 310
3-port DS3 ATM cable assembly 310
3-port DS3 ATM IP function processor 310
3-port DS3 ATM IP faceplate 311
3-port DS3 ATM IP termination panels 313
3-port DS3 ATM IP cable assembly 313

Chapter 13
E1 function processors 315

1-port E1 MVP-E function processor 316
1-port E1 MVP-E faceplate 316
1-port E1 MVP-E termination panels 318
1-port E1 MVP-E balanced cable assembly 318
1-port E1 MVP-E unbalanced cable assembly 318
1-port E1 MVP-E pinouts 319
4-port E1 MVP-E function processor 320
4-port E1 MVP-E faceplate 320
4-port E1 MVP-E termination panels 322
4-port E1 MVP-E balanced cable assembly 322
4-port E1 MVP-E unbalanced cable assembly 322
4-port E1 MVP-E pinouts 323
4-port E1 function processor 326
4-port E1 faceplate 327
4-port E1 termination panels 328
4-port E1 balanced cable assembly 328

4-port E1 unbalanced cable assembly 329
4-port E1 pinouts 329
4-port E1C function processor 331
4-port E1C faceplate 332
4-port E1C termination panels 333
4-port E1C balanced cable assembly 333
4-port E1C unbalanced cable assembly 334
4-port E1C pinouts 334
3-port E1 ATM function processor 336
3-port E1 ATM faceplate 337
3-port E1 ATM termination panels 338
3-port E1 ATM balanced cable assembly 338
3-port E1 ATM unbalanced cable assembly 339
3-port E1 ATM pinouts 339
4-port E1 AAL1 function processor 341
4-port E1 AAL1 faceplate 342
4-port E1 AAL1 termination panels 343
4-port E1 AAL1 balanced cable assembly 343
4-port E1 AAL1 unbalanced cable assembly 344
4-port E1 AAL1 pinouts 344
8-port E1 ATM function processor 346
8-port E1 ATM faceplate 348
8-port E1 ATM termination panels 349
8-port E1 ATM balanced cable assembly 349
8-port E1 ATM unbalanced cable assembly 350
8-port E1 ATM pinouts 350
32-port E1 TDM function processor 354
32-port E1 TDM faceplate 354
32-port E1 TDM termination panels 356
32-port E1 TDM multiport aggregate device 356
Multiport aggregate device connections and cabling 358
Multiport aggregate device power and grounding requirements 359
Multiport aggregate device LEDs 360
Multiport aggregate device alarms 360

Multiport aggregate device compliance 360
32-port E1 TDM cable assembly 361
32-port E1 MSA 1-slot function processors 362
32-port E1 MSA 1-slot faceplate 363
32-port E1 MSA 1-slot and 2-slot FP replacements 364
32-port E1 MSA 1-slot and 2-slot FP sparing combinations 365
32-port E1 MSA termination panels for 1-slot FPs 366
32-port E1 MSA prefabricated cable assemblies for FPs and sparing panels 367
32-port E1 MSA custom-made cable assemblies for FPs and sparing panels 375
32-port E1 MSA 1-slot FP pinouts 376
32-port E1 MSA termination panel pinouts for CPE connections 381
32-port E1 MSA 2-slot function processors 384
32-port E1 MSA 2-slot faceplates 385
32-port E1 MSA 2-slot FP replacements 388
32-port E1 MSA 2-slot FP sparing combinations 388
32-port E1 MSA termination panels 388
32-port E1 MSA 2-slot FP pinouts 389
32-port E1 MSA termination panel pinouts for CPE connections 397
32-port E1 MSA cable assemblies for a 2-slot FP and sparing panel 398
STM-1 cable assembly for optical ports on a 32-port E1 MSA 2-slot FP 400
STM-1 line automatic protection switching on a 32-port E1 MSA 2-slot FP 400
STM-1 interface characteristics on a 32-port E1 MSA 2-slot FP 401
Connecting to STM-1 ports on a 32-port E1 MSA 2-slot FP 402

Chapter 14
E3 function processors 403

1-port E3 function processor 403
1-port E3 faceplate 403
1-port E3 termination panels 404

1-port E3 cable assembly 405
1-port E3 pinouts 405
3-port E3 ATM function processor 406
3-port E3 ATM faceplate 406
3-port E3 ATM termination panels 408
3-port E3 ATM cable assembly 408
3-port E3 ATM IP function processor 408
3-port E3 ATM IP termination panels 411
3-port E3 ATM IP cable assembly 411

Chapter 15
OC-3 function processors 413

3-port OC-3 ATM function processor 413
3-port OC-3 ATM faceplate 413
3-port OC-3 ATM cable assembly 414
3-port OC-3 ATM interface characteristics 415
2-port OC-3 ATM IP function processor 417
2-port OC-3 ATM IP faceplate 418
2-port OC-3 ATM IP cable assembly 419
2-port OC-3 ATM IP line automatic protection switching 419
2-port OC-3 ATM IP interface characteristics 420
Connecting to OC-3 ATM FPs 421

Chapter 16
Ethernet function processors 423

2-port Ethernet 100BaseT function processor 423
2-port Ethernet 100BaseT FP faceplate 424
2-port Ethernet 100BaseT cable assemblies 425
2-port Ethernet 100BaseT pinouts 425
4-port 10/100BaseT Ethernet function processor 427
4-port Ethernet 10/100BaseT faceplate 427
4-port Ethernet 100BaseT cable assemblies 428
4-port Ethernet 100BaseT pinouts 429
6-port Ethernet 10BaseT function processor 432
6-port Ethernet 10BaseT FP faceplate 433
6-port Ethernet 10BaseT termination panels 434

6-port Ethernet 10BaseT cable assemblies 434
6-port Ethernet 10BaseT pinouts 434
8-port 10/100BaseT Ethernet function processor 439
8-port Ethernet 10/100BaseT faceplate 439
8-port Ethernet 100BaseT cable assemblies 440
8-port Ethernet 100BaseT pinouts 441

Chapter 17
2-port STM-1 electrical ATM FP 445
2-port STM-1 electrical ATM IP FP faceplate 445
2-port STM-1 electrical channelized CES/ATM/IMA faceplate 447
2-port STM-1 electrical 1:1 sparing panel (NTPS92AA) 448
2-port STM-1 electrical cable assemblies 449
2-port STM-1e prefabricated cable assemblies 449
2-port STM-1e custom-made cable assemblies 451

Chapter 18
V.11 function processor 453
8-port V.11 faceplate 454
8-port V.11 termination panels 455
8-port V.11 cable assembly 455
8-port V.11 cable assembly parts 456
8-port V.11 pinouts 456

Chapter 19
V.35 function processor 465
8-port V.35 faceplate 466
8-port V.35 termination panels 467
8-port V.35 cable assembly 467
8-port V.35 cable assembly parts 467
8-port V.35 pinouts 468

Chapter 20
HSSI function processor 479
1-port HSSI faceplate 480
1-port HSSI cable assembly 481
1-port HSSI pinouts 481

Chapter 21
JT2 ATM function processor 487
2-port JT2 ATM faceplate 488
2-port JT2 ATM termination panels 489
2-port JT2 ATM cable assembly 489

Chapter 22
TTC2M MVP-E function processor 491
TTC2M MVP-E faceplate 492
TTC2M MVP-E cable assembly 492
TTC2M MVP-E pinouts 493

Chapter 23
ILS Forwarder function processor 495
ILS Forwarder features 495
ILS Forwarder faceplate 496
ILS Forwarder sparing 496

Chapter 24
VPN extender card 499
VPN extender card features 499
VpnXc faceplate 500
VpnXc components 501
VpnXc configuration 501
VpnXc sparing 501

Chapter 25
Voice services function processors 503
VSP function processor 503
Voice services faceplate 504
VSP2 function processor 505
VSP2 faceplate 506

Chapter 26
Wireless packet data server 507
WPDS features 507
WPDS faceplate 509

WPDS configuration 510
WPDS sparing 510

Appendix
Multiservice Switch part numbers 511

List of figures

Figure 1 Faceplate of a blank processor card with PEC NTBP23 52
Figure 2 Ethernet 19” termination panel - PEC NTFP23 60
Figure 3 Ethernet 13” termination panel - PEC NTEP42 61
Figure 4 6-port Ethernet 10BaseT sparing 62
Figure 5 V.11 19” termination panel - PEC NTFP09 63
Figure 6 V.11 13” termination panel - PEC NTEP22 64
Figure 7 V.35 19” termination panels - PEC NTFP08 65
Figure 8 V.35 13” termination panels - PEC NTEP21 65
Figure 9 DS1 or E1 19” termination panel - PEC NTFP10 66
Figure 10 DS1 or E1 13” termination panel - PEC NTEP23 66
Figure 11 DS3 or E3 19” termination panel - PEC NTBP99 67
Figure 12 DS3 or E3 13” termination panel - PEC NTEP37 67
Figure 13 1-port DS3C one-for-n sparing panel 68
Figure 14 DS3, E3, or JT2 ATM 19” termination panel - PEC NTFP99 69
Figure 15 DS3, E3, or JT2 ATM 13” termination panel - PEC NTEP53 69
Figure 16 DS3, E3, or JT2 ATM 19” termination panel NTFP99, detailed view 70
Figure 17 E1 unbalanced 19” termination panel - PEC NTFP11 71
Figure 18 E1 unbalanced 13” termination panel - PEC NTEP24 72
Figure 19 MSA32 19” E1 unbalanced BNC termination panel - PEC NTY196 73
Figure 20 MSA32 19” DS1 or E1 1-port DB15 termination panel - PEC NTY197 75
Figure 21 MSA32 19” DS1 or E1 2-port DB15 termination panel - PEC NTY195 76
Figure 22 MSA32 19” DS1 or E1 RJ-45/RJ-48C termination panel - PEC NTJS95, front view 76
Figure 23 MSA32 DS1 or E1 RJ-45 or RJ-48C termination panel, bottom view 77
Figure 24 2-port STM-1e 1:1 sparing panel - PEC NTPS92AA 79
Figure 25 BITS termination panel - 13” unbalanced (PEC NTPS13BA) 81
Figure 26 BITS termination panel - 19” balanced (PEC NTPS13AB) 82

Figure 27 Multiservice Switch 7420 96
Figure 28 Mounting options for Multiservice Switch 7420 99
Figure 29 13” termination panels mounted on the rear of a Multiservice Switch 7420 100
Figure 30 Multiservice Switch 7440 shelf assembly 109
Figure 31 Floor-mounted Multiservice Switch 7440 with 13” rear-mounted termination panels 112
Figure 32 Rack-mounted Multiservice Switch 7440 with 13” rear-mounted termination panels 113
Figure 33 Rack-mounted Multiservice Switch 7440 with 19” rack-mounted termination panels 114
Figure 34 Multiservice Switch 7440 termination panels mounted in a separate rack 115
Figure 35 Multiservice Switch 7440 clearances 118
Figure 36 Cable recommendation for Multiservice Switch 7440 125
Figure 37 Multiservice Switch 7460 shelf assembly with exploded view of associated parts 131
Figure 38 Multiservice Switch cabinet containing one Multiservice Switch 7460 134
Figure 39 Standard 19-inch rack with four Multiservice Switch 7460s 135
Figure 40 Standard 19-inch rack with termination panels 137
Figure 41 Example of a major alarm connection 144
Figure 42 Multiservice Switch 7480 shelf assembly 151
Figure 43 Multiservice Switch 7480 ac and dc shelf assemblies 153
Figure 44 Multiservice Switch cabinet containing one Multiservice Switch 7480 155
Figure 45 Multiservice Switch cabinet containing two Multiservice Switch 7480s 156
Figure 46 Standard 19-inch rack with two Multiservice Switch 7480s 157
Figure 47 Multiservice Switch cabinet with one Multiservice Switch 7480 and termination panels 159
Figure 48 Standard 19-inch rack with termination panels 160
Figure 49 Standard 19-inch rack with one Multiservice Switch 7480 and termination panels 161
Figure 50 Multiservice Switch 7480 with termination panels—Multiservice Switch cabinet in a standard 19-inch rack 162

Figure 51 Multiservice Switch 7480 shelf assembly clearances 166
Figure 52 Ac power supply ground pin 175
Figure 53 Ac grounding scheme 176
Figure 54 Dc grounding scheme 178
Figure 55 Example of a major alarm connection 180
Figure 56 Dimensions of a cabinet 189
Figure 57 Cabinet alarm connectors 191
Figure 58 Seismic cabinet dimensions 195
Figure 59 Control processor faceplate 202
Figure 60 Control processor with BITS faceplate 203
Figure 61 1-port DS1 voice faceplate 209
Figure 62 DS1 termination panel pinouts and signal names 212
Figure 63 1-port DS1 MVP-E faceplate 213
Figure 64 DS1 termination panel pinouts and signal names 216
Figure 65 4-port DS1 MVP-E faceplate 217
Figure 66 4-port DS1 MVP-E faceplate monitor pinout and signal names 220
Figure 67 DS1 termination panel pinouts and signal names 221
Figure 68 3-port DS1 ATM faceplate 222
Figure 69 DS1 termination panel pinouts and signal names 225
Figure 70 4-port DS1 AAL1 faceplate and connectors 227
Figure 71 DS1 AAL1 termination panel connector pinout and signal names 231
Figure 72 8-port DS1 ATM faceplate and connectors 232
Figure 73 DS1 termination panel pinouts and signal names 237
Figure 74 4-port DS1 frame relay faceplate 239
Figure 75 DS1 termination panel pinout and signal names 242
Figure 76 4-port DS1C faceplate 244
Figure 77 DS1 termination panel pinouts and signal names 248
Figure 78 8-port DS1 faceplate 249
Figure 79 DS1 termination panel pinouts and signal names 254
Figure 80 Faceplate of a 32-port DS1 MSA 1-slot FP with PEC NTNQ94 257
Figure 81 Inter-panel flexi-cable NTJS99 for MSA32 sparing panels with RJ-45 connectors 261
Figure 82 Inter-panel flexi-cable NTY199AB for MSA32 sparing panels with DB15 connectors 262
Figure 83 Fanout cable NTPS32 or NTPS33 for a 32-port DS1 MSA 1-slot FP 265

Figure 84 Fanout cable NTPS36 or NTPS37 with sliding latch D-subs for a 32-port DS1 MSA 1-slot FP 266
Figure 85 Fanout cable adapter NTPS39 for connecting a 1-slot FP to 2-slot cables NTPS03 or NTPS04 267
Figure 86 Fanout cable NTPS03 or NTPS04 to connect to an adapter cable NTPS39 of a DS1 1-slot FP 268
Figure 87 32-port DS1 MSA termination panel pinouts and signal names: 1-port/DB15 274
Figure 88 32-port DS1 MSA termination panel pinouts and signal names: 2-port/DB15 275
Figure 89 32-port DS1 MSA termination panel pinouts and signal names: RJ-45 276
Figure 90 Faceplate of a 32-port DS1 MSA 2-slot NTNQ74 279
Figure 91 Faceplate of a 32-port DS1 MSA 2-slot NTNQ76 or NTNQ78 with OC-3 ports 280
Figure 92 1-port DS3 faceplate 299
Figure 93 1-port DS3C faceplate 303
Figure 94 2-port DS3C TDM faceplate 307
Figure 95 3-port DS3 ATM faceplate 309
Figure 96 3-port DS3 ATM IP faceplate 312
Figure 97 1-port E1 MVP-E faceplate 317
Figure 98 E1 termination panel pinouts and signal names 320
Figure 99 4-port E1 MVP-E faceplate 321
Figure 100 4-port E1 MVP-E faceplate monitor pinout and signal names 325
Figure 101 E1 termination panel pinout and signal names 325
Figure 102 4-port E1 faceplate 327
Figure 103 E1 termination panel pinout and signal names 331
Figure 104 4-port E1C faceplate 332
Figure 105 E1 termination panel pinouts and signal names 336
Figure 106 3-port E1 ATM faceplate 337
Figure 107 E1 termination panel pinouts and signal names 341
Figure 108 4-port E1 AAL1 faceplate and connectors 342
Figure 109 Balanced E1 AAL1 termination panel connector pinout and signal names 346
Figure 110 8-port E1 ATM faceplate and connectors 348
Figure 111 E1 termination panel pinouts and signal names 354
Figure 112 32-port E1 TDM faceplate 355
Figure 113 Balanced multiport aggregate device 357
Figure 114 Unbalanced multiport aggregate device 358

Figure 115 Faceplate of a 32-port E1 MSA 1-slot FP with PEC NTNQ93 364
Figure 116 Inter-panel flexi-cable NTJS99 for MSA32 sparing panels with RJ-45 connectors 368
Figure 117 Inter-panel flexi-cable NTY199AB for MSA32 sparing panels with BNC or DB15 connectors 369
Figure 118 Fanout cable NTPS32 or NTPS33 for a 32-port E1 MSA 1-slot FP 372
Figure 119 Fanout cable NTPS36 or NTPS37 with sliding latch D-subs for a 32-port E1 MSA 1-slot FP 373
Figure 120 Fanout cable adapter NTPS39 for connecting a 1-slot FP to 2-slot cables NTPS03 or NTPS04 374
Figure 121 Fanout cable NTPS03 or NTPS04 to connect to an adapter cable NTPS39 of an E1 1-slot FP 375
Figure 122 32-port E1 MSA termination panel pinouts and signal names: 1-port/DB15 381
Figure 123 32-port E1 MSA termination panel pinouts and signal names: 2-port/DB15 382
Figure 124 32-port E1 MSA termination panel pinouts and signal names: RJ-45 383
Figure 125 Faceplate of a 32-port E1 MSA 2-slot NTNQ69 386
Figure 126 Faceplate of a 32-port E1 MSA 2-slot NTNQ71 or NTNQ73 with STM-1 ports 387
Figure 127 1-port E3 faceplate 404
Figure 128 3-port E3 ATM faceplate 407
Figure 129 3-port E3 ATM IP faceplate 410
Figure 130 OC-3 ATM faceplate 414
Figure 131 2-port OC-3 ATM IP faceplate 418
Figure 132 Faceplate of a 2-port Ethernet 100BaseT FP with PEC NTNQ37 424
Figure 133 RJ-45 connector pin scheme for Ethernet 100BaseT 425
Figure 134 Faceplate of a 4-port Ethernet 10/100BaseT FP with PEC NTNQ95 428
Figure 135 RJ-45 connector pin scheme for Ethernet 100BaseT 430
Figure 136 Faceplate of a 6-port Ethernet 10BaseT FP with PEC NTNQ36 433
Figure 137 6-port Ethernet 10BaseT faceplate connector pin scheme 437
Figure 138 RJ-45 connector pin scheme for Ethernet 10BaseT 438

Figure 139 Faceplate of an 8-port Ethernet 10/100BaseT FP with PEC NTNQ92 440
Figure 140 RJ-45 connector pin scheme for Ethernet 100BaseT 442
Figure 141 Faceplate of a 2-port STM-1 electrical ATM IP FP 446
Figure 142 Faceplate of a 2-port STM-1 electrical channelized CES/ATM/IMA FP 448
Figure 143 Prefabricated cable assembly NTPS12 used between the FP and the sparing panel 450
Figure 144 8-port V.11 faceplate 454
Figure 145 8-port V.11 connector pinout and signal names for DCE-to-DTE or DTE-to-DCE connection 464
Figure 146 8-port V.35 faceplate 466
Figure 147 8-port V.35 connector pinout and signal names for DCE-to-DTE or DTE-to-DCE connection 476
Figure 148 8-port V.35 connector pinout and signal names for crossover cable for DCE-to-DCE connection 477
Figure 149 1-port HSSI faceplate 480
Figure 150 1-port HSSI pinout locations 486
Figure 151 2-port JT2 ATM faceplate 488
Figure 152 TTC2M MVP-E faceplate 492
Figure 153 ILS Forwarder faceplate 497
Figure 154 Faceplate of a VPN extender card 500
Figure 155 Faceplate of a VSP 504
Figure 156 Faceplate of a VSP2 506
Figure 157 WPDS faceplate 509

List of tables

Table 1 Control and function processor dimensions and weights 49
Table 2 Termination panel dimensions and weights 56
Table 3 MSA32 termination panel dimensions and weights 56
Table 4 Sparing panel dimensions and weights 58
Table 5 BITS termination panels 80
Table 6 BITS termination panel cables for CP-with-BITS 81
Table 7 ETS 300 019-2-1 storage compliance for an STM-1e 1:1 sparing panel (NTPS92AA) 85
Table 8 ETS 300 019-2-2 transportation compliance for an STM-1e 1:1 sparing panel (NTPS92AA) 86
Table 9 ETS 300 019-2-3 operation compliance for an STM-1e 1:1 sparing panel (NTPS92AA) 86
Table 10 Thermal compliance for the 2-port STM-1e 1:1 sparing panel (NTPS92AA) 87
Table 11 Multiservice Switch 7420 dimensions and weights 97
Table 12 Environmental tolerances 101
Table 13 Multiservice Switch 7440 dimensions and weights 110
Table 14 Environmental requirements 116
Table 15 Multiservice Switch 7440 processor card and power requirements 119
Table 16 Multiservice Switch 7440 ac power requirements 120
Table 17 Multiservice Switch 7460 equipment dimensions and weights 132
Table 18 Environmental requirements for a Multiservice Switch 7460 138
Table 19 Allowable trip times for Multiservice Switch 7460 power feed protection devices 141
Table 20 External alarm (Alarm 1) connector pinouts 145
Table 21 Pinout of a Multiservice Switch 7460 door alarm (Alarm 2) connector 146
Table 22 Multiservice Switch 7480 dimensions and weights 152
Table 23 Environmental requirements 163
Table 24 Temperature impact of slot position on processor cards 168
Table 25 Temperature impact of system configurations 169
Table 26 Multiservice Switch 7480 ac power requirements 171
Table 27 Allowable trip times for Multiservice Switch 7480 power feed protection devices 174

Table 28 External alarm connector pinouts 181
Table 29 Pinout of Multiservice Switch 7480 alarm 2 shelf connector 182
Table 30 Pinout of a Multiservice Switch 7480 door alarm connector 182
Table 31 Pinout of Multiservice Switch 7480 cooling unit connector 183
Table 32 Cabinet equipment dimensions and weights 188
Table 33 Seismic cabinet dimensions and weights 194
Table 34 Cabinet physical specifications 196
Table 35 Ethernet 10BASE-T connector pinouts 204
Table 36 V.24 connector pinout and signal names 205
Table 37 BITS interface connector pinout and signal names 205
Table 38 1-port DS1 voice cable assembly parts 210
Table 39 1-port DS1 voice connector P0 pinout and signal names 211
Table 40 1-port DS1 MVP-E cable assembly parts 214
Table 41 1-port DS1 MVP-E connector P0 pinout and signal names 214
Table 42 4-port DS1 MVP-E cable assembly parts 218
Table 43 4-port DS1 connector P0 pinout and signal names 219
Table 44 4-port DS1 connector P1 pinout and signal names 219
Table 45 3-port DS1 cable assembly parts 223
Table 46 3-port DS1 ATM connector P0 pinout and signal names 224
Table 47 3-port DS1 ATM connector P1 pinout and signal names 224
Table 48 Recommended cable assembly parts for DS1 AAL1 lines 228
Table 49 4-port DS1 AAL1 FP connector P0 pinout and signal names 229
Table 50 4-port DS1 AAL1 FP connector P1 pinout and signal names 230
Table 51 8-port DS1 ATM cable assembly parts 233
Table 52 8-port DS1 ATM connector P0 pinout and signal names 234
Table 53 8-port DS1 ATM connector P1 pinout and signal names 235
Table 54 8-port DS1 ATM connector P2 pinout and signal names 235

Table 55 8-port DS1 ATM connector P3 pinout and signal names 236
Table 56 4-port DS1 cable assembly parts 240
Table 57 4-port DS1 connector P0 pinout and signal names 241
Table 58 4-port DS1 connector P1 pinout and signal names 241
Table 59 4-port DS1C cable assembly parts 245
Table 60 4-port DS1C connector C0 pinout and signal names 246
Table 61 4-port DS1C connector C1 pinout and signal names 246
Table 62 8-port DS1 cable assembly parts 250
Table 63 8-port DS1 connector P0 pinout and signal names 251
Table 64 8-port DS1 connector P1 pinout and signal names 252
Table 65 8-port DS1 connector P2 pinout and signal names 252
Table 66 8-port DS1 connector P3 pinout and signal names 253
Table 67 Compatible replacements for equivalent DS1 MSA 1-slot and 2-slot FPs 258
Table 68 Sparing combinations of DS1 MSA FPs and sparing panels 259
Table 69 PECs of the MSA32 DS1 flexi-cables between sparing panels 260
Table 70 PECs of the MSA32 DS1 interface fanout cables from FP to sparing panel 263
Table 71 Mapping of MSA 1-slot FP port numbers to fanout cable connectors 270
Table 72 DS1 MSA 1-slot FP connector pinouts for P0 ports 0 to 7 and P1 ports 16 to 23 270
Table 73 32-port DS1 MSA 1-slot FP connector pinouts for P0 ports 8 to 15 and P1 ports 24 to 31 272
Table 74 DS1 MSA32 cable assembly parts for direct connection to a 2-slot FP 282
Table 75 DS1 MSA32 cable assembly parts for a 1-port DB15 sparing panel 283
Table 76 DS1 MSA32 cable assembly parts for a 2-port DB15 sparing panel 283
Table 77 32-port DS1 MSA 2-slot FP connector P0 pinout and signal names 284
Table 78 32-port DS1 MSA 2-slot FP connector P1 pinout and signal names 286
Table 79 32-port DS1 MSA 2-slot FP connector P2 pinout and signal names 288

Table 80 32-port DS1 MSA 2-slot FP connector P3 pinout and signal names 290
Table 81 OC-3 ATM general interface characteristics on a DS1 MSA 2-slot FP 294
Table 82 OC-3 single-mode intermediate reach optical interface characteristics on a DS1 MSA 2-slot FP 294
Table 83 OC-3 multimode optical interface characteristics on a DS1 MSA 2-slot FP 295
Table 84 1-port DS3 cable assembly parts 300
Table 85 1-port DS3 card D-type connector pinouts and signal names 301
Table 86 1-port DS3 cable assembly parts 305
Table 87 DS3C FP connector pinouts and signal names 305
Table 88 2-port DS3C TDM cable assembly parts 308
Table 89 3-port DS3 ATM cable assembly parts 310
Table 90 3-port DS3 ATM IP cable assembly parts 313
Table 91 1-port E1 MVP-E cable assembly parts 318
Table 92 1-port E1 MVP-E cable assembly parts 319
Table 93 1-port E1 MVP-E connector P0 pinout and signal names 319
Table 94 Balanced 4-port E1 MVP-E cable assembly parts 322
Table 95 Unbalanced 4-port E1 MVP-E cable assembly parts 323
Table 96 4-port E1 MVP-E connector P0 pinout and signal names 323
Table 97 4-port E1 MVP-E connector P1 pinout and signal names 324
Table 98 Balanced 4-port E1 cable assembly parts 328
Table 99 Unbalanced 4-port E1 cable assembly parts 329
Table 100 4-port E1 connector P0 pinout and signal names 329
Table 101 4-port E1 connector P1 pinout and signal names 330
Table 102 Balanced 4-port E1C cable assembly parts 333
Table 103 Unbalanced 4-port E1C cable assembly parts 334
Table 104 4-port E1C connector C0 pinout and signal names 334
Table 105 4-port E1C connector C1 pinout and signal names 335
Table 106 3-port E1 ATM balanced cable assembly parts 338
Table 107 3-port E1 ATM unbalanced cable assembly parts 339
Table 108 3-port E1 ATM connector P0 pinout and signal names 339
Table 109 3-port E1 ATM connector P1 pinout and signal names 340

Table 110 Recommended cable assembly for balanced 4-port E1 AAL1 lines 343
Table 111 Recommended cable assembly parts for unbalanced 4-port E1 AAL1 lines 344
Table 112 4-port E1 AAL1 FP connector P0 pinout and signal names 344
Table 113 4-port E1 AAL1 FP connector P1 pinout and signal names 345
Table 114 8-port E1 ATM balanced cable assembly parts 349
Table 115 8-port E1 ATM unbalanced cable assembly parts 350
Table 116 8-port E1 ATM connector P0 pinout and signal names 351
Table 117 8-port E1 ATM connector P1 pinout and signal names 351
Table 118 8-port E1 ATM connector P2 pinout and signal names 352
Table 119 8-port E1 ATM connector P3 pinout and signal names 353
Table 120 E1 RJ45 connector pinouts 359
Table 121 32-port E1 TDM cable assembly parts 361
Table 122 Compatible replacements for equivalent E1 MSA 1-slot and 2-slot FPs 365
Table 123 Sparing combinations of E1 MSA FPs and sparing panels 366
Table 124 PECs of the MSA32 E1 flexi-cables between sparing panels 367
Table 125 PECs of the MSA32 E1 interface fanout cables from FP to sparing panel 370
Table 126 Mapping of MSA 1-slot FP port numbers to fanout cable connectors 377
Table 127 E1 MSA 1-slot FP connector pinouts for P0 ports 0 to 7 and P1 ports 16 to 23 377
Table 128 32-port E1 MSA 1-slot FP connector pinouts for P0 ports 8 to 15 and P1 ports 24 to 31 379
Table 129 32-port E1 MSA 2-slot FP connector P0 pinout and signal names 389
Table 130 32-port E1 MSA 2-slot FP connector P1 pinout and signal names 391
Table 131 32-port E1 MSA 2-slot FP connector P2 pinout and signal names 393

Table 132 32-port E1 MSA 2-slot FP connector P3 pinout and signal names 395
Table 133 PECs of the 32-port E1 MSA flexi-cables between sparing panels 398
Table 134 E1 MSA32 cable assembly parts for direct connection to a 2-slot FP 398
Table 135 E1 MSA32 cable assembly parts for a 1-port or 2-port DB15 sparing panel 399
Table 136 E1 MSA32 cable assembly parts for an unbalanced sparing panel and CPE 399
Table 137 STM-1 ATM general interface characteristics on an E1 MSA 2-slot FP 401
Table 138 STM-1 single-mode intermediate reach interface characteristics on a 32-port E1 MSA 2-slot FP 401
Table 139 STM-1 multimode interface characteristics on a 32-port E1 MSA 2-slot FP 402
Table 140 1-port E3 cable assembly parts 405
Table 141 E3 D-type connector pinouts and signal names 406
Table 142 3-port E3 ATM cable assembly parts 408
Table 143 3-port E3 ATM IP cable assembly parts 411
Table 144 3-port OC-3 ATM general interface characteristics 415
Table 145 3-port OC-3 ATM single mode intermediate reach interface characteristics 416
Table 146 3-port OC-3 ATM multimode interface characteristics 416
Table 147 2-port OC-3 ATM IP general interface characteristics 420
Table 148 2-port OC-3 ATM IP single mode long reach interface characteristics 420
Table 149 2-port OC-3 ATM IP multimode interface characteristics 421
Table 150 RJ-45 connector pinout for Ethernet 100BaseT 426
Table 151 RJ-45 connector pinout for 100BaseT 430
Table 152 6-port Ethernet 10BaseT faceplate and termination panel pinout 435
Table 153 6-port Ethernet 10BaseT termination panel connector pinout 437
Table 154 RJ-45 connector pinout for 100BaseT 442
Table 155 Prefabricated cable assemblies for the 2-port STM-1e 1:1 sparing panel or FP 449
Table 156 2-port STM-1 electrical coax cable assembly parts 451

Table 157 Pinout of a control cable for the 2-port STM-1e FP or sparing panel 452
Table 158 Maximum V.11 cable lengths 455
Table 159 8-port V.11 cable assembly parts 456
Table 160 8-port V.11 connector P0 pinouts and signal names for ports 0 and 1 457
Table 161 8-port V.11 connector P0 pinout and signal names for ports 2 and 3 458
Table 162 8-port V.11 connector P1 pinout and signal names for ports 4 and 5 460
Table 163 8-port V.11 connector P1 pinout and signal names for ports 6 and 7 461
Table 164 8-port V.35 cable assembly parts 468
Table 165 8-port V.35 connector P0 pinout and signal names for ports 0 and 1 469
Table 166 8-port V.35 connector P0 pinout and signal names for ports 2 and 3 470
Table 167 8-port V.35 connector P1 pinout and signal names for ports 4 and 5 472
Table 168 8-port V.35 connector P1 pinout and signal names for ports 6 and 7 474
Table 169 1-port HSSI cable assembly parts 481
Table 170 1-port HSSI pinouts for DCE mode or DTE mode of operation 482
Table 171 1-port HSSI pinouts for cable from DCE mode connector P0 to DTE equipment 483
Table 172 1-port HSSI pinouts for null modem cable from DTE mode connector P0 to DCE equipment 484
Table 173 2-port JT2 ATM cable assembly parts 489
Table 174 TTC2M MVP-E cable assembly parts 493
Table 175 TTC2M MVP-E cable assembly parts 493
Table 176 TTC2M MVP-E connector P0 pinout and signal names 494
Table 177 Multiservice Switch 7480 part numbers 512
Table 178 Multiservice Switch 7460 part numbers sorted by order code 512
Table 179 Multiservice Switch 7440 part numbers 513
Table 180 Multiservice Switch 7420 part numbers 514
Table 181 Multiservice Switch cabinet and seismic cabinet part numbers 514
Table 182 Multiservice Switch power cord part numbers 515

Table 183 Multiservice Switch processor card part numbers sorted by order code 515
Table 184 Multiservice Switch termination panel part numbers 518
Table 185 Multiservice Switch cable part numbers sorted by interface type 520
Table 186 Multiservice Switch miscellaneous items part numbers 523

About this document

This document, contains descriptions of Nortel Networks Multiservice Switch 7400 models, components, specifications, line rates, cable assemblies and standards compliances.

The following topics are discussed in this section:

- “Who should read this document and why” (page 37)
- “What you need to know” (page 37)
- “How this document is organized” (page 38)
- “What’s new in this document” (page 38)
- “Related documents” (page 44)
- “Notational conventions” (page 44)
- “Drawing conventions” (page 45)
- “How to get more help” (page 45)

Who should read this document and why

This document is intended for those who want an overview of Nortel Networks Multiservice Switch 7400 hardware. It is also intended as a reference for those who install, provision, and troubleshoot Multiservice Switch 7400 hardware.

What you need to know

You should be familiar with fundamental data communications and basic electronic concepts and terms. You can acquire product knowledge by reading NN10600-030 *Nortel Networks Multiservice Switch 7400/15000/20000 Overview*.

WARNING
Risk of radio interference
The Multiservice Switch 7400 series has class B compliant products provided you ensure that all power, function processor (FP), and control processor (CP) cabling is also class B compliant. Using non-class B compliant cabling may cause radio interference. Nortel Networks provides prefabricated interface cables and power cable kits with ferrite beads for B compliance.

How this document is organized

This document, contains the following sections:

- “Processor cards” (page 47)
- “Termination and sparing panels” (page 53)
- “Cables” (page 89)
- “Multiservice Switch 7420” (page 95)
- “Multiservice Switch 7440” (page 107)
- “Multiservice Switch 7460” (page 129)
- “Multiservice Switch 7480” (page 149)
- “Multiservice Switch cabinet” (page 187)
- “Seismic cabinet” (page 193)
- “Processor cards” (page 47)c

What’s new in this document

The following features were added to this document:

- “4-port 10/100BaseT Ethernet FP” (page 41)
- “8-port 10/100BaseT Ethernet FP” (page 41)
- “CP support and CP/VPNXc warm standby equipment protection” (page 41)
- “Multiservice Switch 7460” (page 42)
- “32-port DS1 and E1 MSA 1-slot FPs” (page 42)

Other changes made to this document include the following:

- The terms Passport and PVG have been rebranded in conjunction with the new Nortel Networks' brand simplified naming format. Passport is now referred to as the Nortel Networks Multiservice Switch, and PVG is now Media Gateway 7480/15000. For more information on the product rebranding, refer to NN10600-000 *Nortel Networks Multiservice Switch 7400/15000/20000 What's New in PCR6.1*.
- changed the Caution regarding the class B status of equipment in "What you need to know" (page 37)
- for CR Q00896986, corrected the pinout of pins 2, 27 and 9, 34 in the table "1-port HSSI pinouts for DCE mode or DTE mode of operation" (page 482)
- clarified the sparing support of the MSA32 sparing panels in "MSA32 DS1 or E1 termination panels" (page 73)
- added callouts inside the figure "MSA32 DS1 or E1 RJ-45 or RJ-48C termination panel, bottom view" (page 77)
- added the PECs NT0464 and NTFN93 to:
  - "2-port DS3C TDM function processor" (page 305)
  - "32-port E1 TDM function processor" (page 354)
  - the table "Multiservice Switch processor card part numbers sorted by order code" (page 515)
- added the FP PEC vintages to clarify the Caution regarding the quantity of power supplies when initially installing 32-port MSA 2-slot FPs in
  - "32-port DS1 MSA 1-slot faceplate" (page 256)
  - "32-port E1 MSA 1-slot faceplate" (page 363)
- added the tables "Sparing combinations of DS1 MSA FPs and sparing panels" (page 259) and "Sparing combinations of E1 MSA FPs and sparing panels" (page 366)
- removed all mention of BNC from DS1 information since it is not supported in this context:

— “PECs of the MSA32 DS1 flexi-cables between sparing panels” (page 260)

- added these figures and to the descriptions of the prefabricated cable assemblies for both DS1 and E1 MSA32 FPs:
  — “Inter-panel flexi-cable NTY199AB for MSA32 sparing panels with DB15 connectors” (page 262)
  — “Inter-panel flexi-cable NTJS99 for MSA32 sparing panels with RJ-45 connectors” (page 261)
  — “Fanout cable NTPS03 or NTPS04 to connect to an adapter cable NTPS39 of a DS1 1-slot FP” (page 268)
- for cable assembly specifications, added the tables:
  — “DS1 MSA32 cable assembly parts for direct connection to a 2-slot FP” (page 282)
  — “DS1 MSA32 cable assembly parts for a 1-port DB15 sparing panel” (page 283)
  — “DS1 MSA32 cable assembly parts for a 2-port DB15 sparing panel” (page 283)
  — “E1 MSA32 cable assembly parts for direct connection to a 2-slot FP” (page 398)
  — “E1 MSA32 cable assembly parts for a 1-port or 2-port DB15 sparing panel” (page 399)
  — “E1 MSA32 cable assembly parts for an unbalanced sparing panel and CPE” (page 399)
- updated the tables “PECs of the MSA32 DS1 interface fanout cables from FP to sparing panel” (page 263) and “PECs of the MSA32 E1 interface fanout cables from FP to sparing panel” (page 370) to include more information about the existing cable assemblies
- added “32-port DS1 MSA custom-made cable assemblies for FPs and sparing panels” (page 268) and “32-port E1 MSA custom-made cable assemblies for FPs and sparing panels” (page 375)
- corrected the description of the cable assembly in “2-port STM-1e custom-made cable assemblies” (page 451)

- corrected the pinouts of the V.11 DCE column in the table “8-port V.11 connector P1 pinout and signal names for ports 6 and 7” (page 461)
- updated the issue dates of GR-63 and GR-1089 throughout the document

4-port 10/100BaseT Ethernet FP

The 4-port 10/100BaseT Ethernet FP with PEC NTNQ95 and software name 4pEth100BaseT is introduced for any Multiservice Switch 7400. The following were added or updated for this card:

- the section “4-port 10/100BaseT Ethernet function processor” (page 427)
- the section “Function processor cable assemblies” (page 91) to add a cross-reference to the cables for the NTNQ95
- the table “Multiservice Switch processor card part numbers sorted by order code” (page 515) to add the PEC of the FP
- the table “Multiservice Switch cable part numbers sorted by interface type” (page 520) to add the Ethernet cable assembly part numbers

8-port 10/100BaseT Ethernet FP

The 8-port 10/100BaseT Ethernet FP with PEC NTNQ92 and software name 8pEth100BaseT is introduced for any Multiservice Switch 7400. The following were added or updated for this card:

- the section “8-port 10/100BaseT Ethernet function processor” (page 439)
- the section “Function processor cable assemblies” (page 91) to add a cross-reference to the cables for the NTNQ92
- the table “Multiservice Switch processor card part numbers sorted by order code” (page 515) to add the PEC of the FP
- the table “Multiservice Switch cable part numbers sorted by interface type” (page 520) to add the Ethernet cable assembly part numbers

CP support and CP/VPNXc warm standby equipment protection

The following section was updated for this feature:

- “VpnXc sparing” (page 501)

Multiservice Switch 7460

The release of Nortel Networks Multiservice Switch 7460 introduces an 8-slot shelf into the Multiservice Switch 7400 series. This document is changed by:

- adding “Multiservice Switch 7460” (page 129)
- updating “Door alarm” (page 142) to include the cable and the connection end points
- updating “Multiservice Switch 7460 ventilation and access clearances” (page 139) to include fan behavior
- updating “Seismic cabinet” (page 193) to add physical specifications and heat dissipation of the seismic cabinet equipped with Multiservice Switch 7460s
- updating “Multiservice Switch part numbers” (page 511) to add Multiservice Switch 7460 individual part numbers that are field replaceable units (FRUs) or service replaceable units (SRUs)

32-port DS1 and E1 MSA 1-slot FPs

Nortel Networks Multiservice Switch 7400 series introduces the 32-port DS1 MSA 1-slot function processors (FPs) with PEC NTNQ94 and the 32-port E1 MSA 1-slot FPs with PEC NTNQ93. This document is changed by:

- added how a 1-slot MSA FP provides power to a sparing panel in “Power for a sparing panel” (page 58)
- adding the table “Sparing combinations of DS1 MSA FPs and sparing panels” (page 259), which includes the 1-slot and 2-slot FPs
- adding the section “32-port DS1 MSA 1-slot function processors” (page 255) to include:
  - a figure of the faceplate
  - figures of the prefabricated cable assemblies
  - replacing 2-slot FPs with 1-slot FPs that have a different PEC, that is, are equivalent FPs
  - combinations involving 1-slot and 2-slot FPs in the same sparing configuration

  - the cable specifications and pinouts to enable customers to make custom-length cables
  - the requirements for cabling equivalent customer premises interface equipment directly to the FP faceplate
- updated “32-port DS1 MSA prefabricated cable assemblies for FPs and sparing panels” (page 260) to include the split fanout cables and fanout cable adapter
- updating headings and text in “32-port DS1 MSA 2-slot function processors” (page 277) to indicate they apply to the 2-slot version of the cards
- adding the section “32-port DS1 MSA 1-slot function processors” (page 255) to include:
  - a figure of the faceplate
  - figures of the prefabricated cable assemblies
  - replacing 2-slot FPs with 1-slot FPs that have a different PEC, that is, are equivalent FPs
  - combinations involving 1-slot and 2-slot FPs in the same sparing configuration
  - the cable specifications and pinouts to enable customers to make custom-length cables
  - the requirements for cabling equivalent customer premises interface equipment directly to the FP faceplate
- updated “32-port DS1 MSA prefabricated cable assemblies for FPs and sparing panels” (page 260) to include the split fanout cables and fanout cable adapter
- updating headings and text in “32-port E1 MSA 2-slot function processors” (page 384) to indicate they apply to the 2-slot version of the cards
- adding the PECs of the DS1 and E1 FPs to the table “Multiservice Switch processor card part numbers sorted by order code” (page 515)

- adding the PECs of the fanout cables and fanout cable adapter to the table “Multiservice Switch cable part numbers sorted by interface type” (page 520)

Related documents

For information about Nortel Networks Multiservice Switch documentation suite, see the following source:

- NN10600-001 *Nortel Networks Multiservice Switch 7400/15000/20000 Basics: Using the Documentation*.

For more information about planning, installing, operating, and maintaining Nortel Networks Multiservice Switch 7400 equipment, see the following sources:

- NN10600-175 *Nortel Networks Multiservice Switch 7400 Hardware Installation, Maintenance, and Upgrade*
- NN10600-550 *Nortel Networks Multiservice Switch 7400/15000/20000 Common Configuration Procedures*
- NN10600-551 *Nortel Networks Multiservice Switch 7400/15000/20000 FP Configuration Reference*
- *Passport 7400 Installation Video*

Notational conventions

The following are samples of caution and warning conventions used in this document.

WARNING
Risk of personal injury
This warning informs you of risk of personal injury.

WARNING
Risk of personal injury by electrocution
This warning informs you of risk of personal injury from electrical shock.

CAUTION
Risk of service interruption or equipment damage
This caution informs you of risk of service interruption or equipment damage.

CAUTION
Risk of electrostatic damage
This caution alerts you to the need to wear a grounded antistatic wrist strap or equivalent protection to avoid damaging electronic parts.

Note: Some warnings and cautions appear in German in this document. This is required for compliance with VDE (Verband Deutscher Elektrotechniker) requirements.

Drawing conventions

Most drawings in this book are isometric projections. Isometric drawings represent all three dimensions of an object to convey a sense of overall shape and proportion. Three faces of the object are equally inclined to the drawing surface so that all edges are equally foreshortened.

How to get more help

For information on training, problem reporting, and technical support, see the “Nortel Networks support services” section in NN10600-030 *Nortel Networks Multiservice Switch 7400/15000/20000 Overview*.

Chapter 1
Processor cards

Control processor (CP) cards and function processor (FP) cards are the plug-in processing elements for performing and managing network traffic functions. In most cases, the software providing a service is split into control and function parts. The control part runs on the CP while the function part runs on the FP. This results in:

- more efficient data flow since the FP does not do resource-consuming non-data-path processing
- more efficient memory resources for data transmission

Access to the FP and CP is from the front. The front, or faceplate, of each FP or CP has connectors, two ejector latches, two ejector locks, and a LED status indicator.

See these sections for more detailed information about shared physical characteristics:

- “Locks on cards” (page 48)
- “Dimensions and weights” (page 49)
- “Line rate, port configuration, and clocking” (page 49)
- “Function processor cards” (page 50)
- “Control processor cards” (page 51)

Locks on cards

Nortel Networks Multiservice Switch equipment has locks for security reasons and to protect personnel. Improperly seated or removed circuit cards present electrical hazards.

All circuit cards have locking latches so that there is no risk to personnel, even when the chassis is installed in cabinets that do not lock.

WARNING

Risk of injury by electric shock

High voltages are present in shelf assemblies. There is a risk of electric shock. The CPs and FPs have locking latches, so even cabinets that do not lock pose no risk to personnel.

CPs and FPs from the initial hardware release do not have locking latches. If your CPs or FPs do not have locking latches, you must install them in a cabinet that locks.

WARNUNG

Verletzungsgefahr durch Elektroschock

In den Multiservice Switch-Regalbaugruppen liegen hohe Stromspannungen vor. Es besteht die Gefahr eines Elektroschocks. Die CPs und FPs verfügen über selbstverriegelnde Sperrvorrichtungen, so daß selbst bei nicht gesicherten Gehäusen keine Gefahr für das Bedienungspersonal besteht.

Die CPs und FPs der ersten Multiservice Switch-Version besitzen keine selbstverriegelnden Sperrvorrichtungen. Solche CPs und FPs müssen in einem abschließbaren Gehäuse installiert werden

Dimensions and weights

This table summarizes the approximate dimensions and weights of the hardware you may be handling.

Table 1
Control and function processor dimensions and weights

Equipment	Outside dimensions (height x width x depth)	Weight
Function processor (FP)	30.5 cm x 2.5 cm x 39.4 cm (12.0 inch x 1.0 inch x 15.5 inch)	1.5 kg (3.5 lb)
Control processor (CP)	30.5 cm x 2.5 cm x 39.4 cm (12.0 inch x 1.0 inch x 15.5 inch)	2 kg (4.5 lb)
Blank processor card	30.5 cm x 2.5 cm x 39.4 cm (12.0 inch x 1.0 inch x 15.5 inch)	0.5 kg (1.1 lb)

Line rate, port configuration, and clocking

Line rate

The speed at which a function processor (FP) interfaces with a specified line type.

Port configuration

A timeslot represents a 56 kbit/s or 64 kbit/s portion of the total bandwidth of a port.

One channel can support all 24 timeslots (clear channel mode), or fewer than 24 timeslots (fractional mode). Any timeslots that are not used are wasted. Each timeslot can be used only once.

In clear channel mode, the entire payload bandwidth of the Nortel Networks Multiservice Switch trunk is used for one channel.

Timeslots can also be grouped together to form fractions (also known as channels). Fractions allow you to provision n x 56 kbit/s or n x 64 kbit/s links, where, n is a value between 1 and the maximum number of timeslots on the port. The ports act in groups. For example, on a four port FP, the first group

can contain ports 0 and 1 and the second group can contain ports 2 and 3. Each of the groups can be configured differently. Ports 0 and 1 could be single clear channel and port 3 could be multiplexed fractional channels.

Clocking

The receive clock is recovered from incoming data. The transmit clock can be generated from a variety of different sources:

- In *local* clocking mode, the crystal on the card generates the transmit clocking reference.
- In *line* clocking mode, the port uses the clock recovered from the receive data as its transmit clock.
- In *module* clocking mode, the port takes the clock generated from the stratum 3 clocking source on the control processor and locks its transmit clock to that source.
- In *otherPort* clocking mode, another port on the same FP is controlling the transmit clock in line mode.

If all applicable ports on a specific node are configured with *module* timing, synchronization status messages (SSM) can be used to identify the clock quality. The SSM can then be used to synchronize a line or port, helping to prevent timing loops. Nortel Networks Multiservice Switch network clock synchronization system (NCS) chooses the best clock signal (based on the SSM quality level) and makes it available on all ports on those nodes configured to use *module* timing. For more information on network clock synchronization and SSM, see NN10600-550 *Nortel Networks Multiservice Switch 7400/15000/20000 Common Configuration Procedures*.

Function processor cards

Function processor (FP) cards provide interface ports that physically connect network communications facilities and Nortel Networks Multiservice Switch equipment. They transfer data from external sources through the bus and out the node through other FPs. FPs have been designed specifically to accommodate high data throughput. Their computational resources support and execute only those real-time processes critical to rapidly delivering a service. These processes include protocol handling, call routing, and packet forwarding.

For hardware description information on specific FPs see:

- “DS1 function processors” (page 207)
- “DS3 function processors” (page 297)
- “E1 function processors” (page 315)
- “E3 function processors” (page 403)
- “Ethernet function processors” (page 423)
- “HSSI function processor” (page 479)
- “ILS Forwarder function processor” (page 495)
- “JT2 ATM function processor” (page 487)
- “OC-3 function processors” (page 413)
- “2-port STM-1 electrical ATM FP” (page 445)
- “TTC2M MVP-E function processor” (page 491)
- “V.11 function processor” (page 453)
- “V.35 function processor” (page 465)
- “Voice services function processors” (page 503)
- “Wireless packet data server” (page 507)

Control processor cards

For hardware description information on control processor (CP) cards, see the chapter “Control processors” (page 199).

Blank processor cards

Blank processor cards are used to fill empty slots in a shelf. The slots must be filled so that electromagnetic interference (EMI) is contained and so that optimum airflow occurs across the processor cards. The cards in a shelf or the shelf itself can overheat if any slots are left empty.

The PEC of a blank processor card is NTBP23. Refer to the figure “Faceplate of a blank processor card with PEC NTBP23” (page 52).

Figure 1
Faceplate of a blank processor card with PEC NTBP23

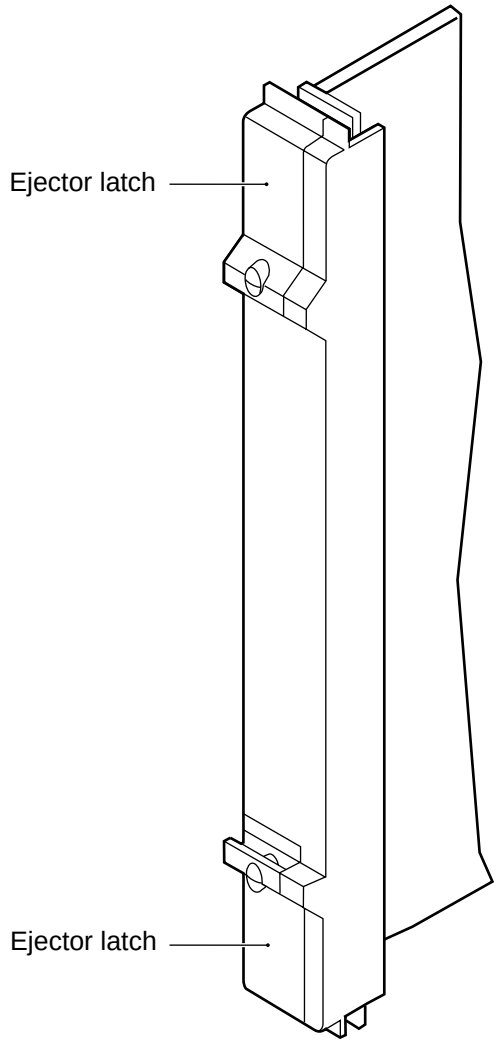

Chapter 2
Termination and sparing panels

This chapter contains these sections:

- “Termination panel formats” (page 53)
- “Termination panel functions” (page 54)
- “Termination panel dimensions and weights” (page 56)
- “Termination panel sparing function” (page 57)
- “Termination panel types” (page 59)
- “Sparing panel dimensions and weights” (page 58)
- “Power for a sparing panel” (page 58)
- “Sparing panel compliance with standards” (page 83)

For termination and sparing panel product engineering codes (PECs) see “Multiservice Switch part numbers” (page 511).

Termination panel formats

Some termination panels are available in two types of connection formats:

- balanced, which uses twisted pair cable connections
- unbalanced, which uses coaxial cable connections

Not all processor cards have termination panels associated with them. For those that do, there is a different termination panel for each card and two possible mounting formats:

- 19-inch—mounted in a Nortel Networks Multiservice Switch cabinet or on an EIA standard 19-inch rack

See the following sections for more information on termination panels for specific processor cards:

- “Termination panel types” (page 59)
- “Termination panel sparing function” (page 57)

Termination panel functions

Customer equipment can connect to function processors (FPs) directly or through a termination panel. The termination panel is a cable distribution system which can reside in the Nortel Networks Multiservice Switch cabinet or be mounted in another cabinet or rack.

A termination panel provides different functions, depending on the processor card it supports. It can

- provide a break-out (or fanout) for customer-equipment connections so that each port on an FP has its own termination point and access
- provide media conversion
- provide sparing capability
- act as a concentrator, reducing the number of cables that are attached to the front of a shelf
- determine the type of connection (DCE or DTE) depending on which connector is used
- provide external timing functionality in the case of a BITS termination panel that works together with a CP with BITS.

For information about termination panels and cabinet layout, see:

- “Multiservice Switch 7480 termination panels” (page 158)
- “Multiservice Switch 7480 termination panels” (page 158)

- “Multiservice Switch 7440 termination panels” (page 111)
- “Multiservice Switch 7420 termination panels” (page 100)

For information about installing and connecting termination panels to FPs, see NN10600-175 *Nortel Networks Multiservice Switch 7400 Hardware Installation, Maintenance, and Upgrade*.

Termination panel dimensions and weights

The following tables summarize the approximate dimensions and weights of the termination panels you may be handling.

Table 2
Termination panel dimensions and weights

Equipment	Outside dimensions (height x width x depth)	Typical Weight
13-inch termination panel	30.0 cm x 4.6 cm x 1.3 cm (13.0 in. x 1.8 in. x 0.5 in.)	0.45 kg (1.0 lb)
1-unit-high 19-inch termination panel	4.45 cm x 48.3 cm x 1.8 cm (1.75 in. x 19.0 in. x 0.7 in.)	0.44 kg (1.0 lb)
2-unit-high 19-inch termination panel	8.9 cm x 48.3 cm x 1.8 cm (3.5 in. x 19.0 in. x 0.7 in.)	2.3 kg (5.0 lb)

Table 3
MSA32 termination panel dimensions and weights

Equipment	Outside dimensions (height x width x depth)	Typical Weight
1-unit-high 19-inch termination panel (RJ-45)	4.45 cm x 48.3 cm x 8.5 cm (1.75 in. x 19.0 in. x 3.35 in.)	1.5 kg (3.3 lb)
3-unit-high 19-inch termination panel (2-port/DB15)	13.35 cm x 48.3 cm x 2.3 cm (5.26 in. x 19.0 in. x 0.9 in.)	2.0 kg (4.4 lb)
4-unit-high 19-inch termination panel (1-port/DB15)	17.8 cm x 48.3 cm x 2.3 cm (7 in. x 19.0 in. x 0.9 in.)	3.5 kg (7.7 lb)
5-unit-high 19-inch termination panel (unbalanced)	22.25 cm x 48.3 cm x 2.9 cm (8.76 in. x 19.0 in. x 1.14 in.)	4.2 kg (9.26 lb)

Some termination panels are a sparing panel, as described in “Termination panel sparing function” (page 57).

Termination panel sparing function

A termination panel with the sparing function is often referred to as a sparing panel. A sparing panel enables you to use a single function processor (FP) as the spare for one or more FPs of the same type and vintage. The use of a single FP as the spare for one other FP is referred to as one-for-one (1:1) sparing. The use of a single FP as the spare for two or more FPs is referred to as one-for-n (1:n) sparing where n is the maximum number of FPs to be spared.

For example, one-for-four (1:4) sparing uses one FP to act as the spare for up to four other FPs.

There are two categories of sparing panels, single and modular. Single sparing panels are used for one-for-one or one-for-n sparing for most types of FPs. For example, to achieve a one-for-four sparing configuration, one sparing panel with the appropriate number of connectors must be installed. Modular sparing panels are used for one-for-one or one-for-n sparing for 32-port multi-service access (MSA32) DS1 or E1 FPs. The installation (and cabling) of an MSA32 sparing panel differs from any other kind. For example, to achieve a one-for-four sparing configuration, four MSA32 sparing panels must be installed.

When a main FP connected to a one-for-*n* sparing panel fails, the control processor (CP) identifies the failed main FP, and instructs the panel to switch the relay contacts for the failed FP to the spare. Traffic for the failed FP changes to the spare.

For information about sparing panels for specific FPs, see

- “DS1 or E1 termination panels” (page 65)
- “DS3 or E3 termination panels” (page 66)
- “DS3, E3, or JT2 ATM termination panels” (page 68)
- “E1 unbalanced termination panels” (page 71)
- “MSA32 E1 unbalanced BNC termination panel” (page 72)
- “MSA32 DS1 or E1 termination panels” (page 73)
- “2-port STM-1 electrical 1:1 sparing panel” (page 77)

For more information about FP sparing, see NN10600-550 *Nortel Networks Multiservice Switch 7400/15000/20000 Common Configuration Procedures*.

For information about installing or replacing a sparing panel, see NN10600-175 *Nortel Networks Multiservice Switch 7400 Hardware Installation, Maintenance, and Upgrade*.

For the physical characteristics of sparing panels, see:

- "Sparing panel dimensions and weights" (page 58)
- "Power for a sparing panel" (page 58)
- "Sparing panel compliance with standards" (page 83)

Sparing panel dimensions and weights

This table summarizes the approximate dimensions and weight of sparing panels.

Table 4
Sparing panel dimensions and weights

Equipment	Outside dimensions (height x width x depth)	Weight
one-for-four sparing panel	13.2 cm x 48.3 cm x 2.5 cm (5.2 in. x 19.0 in. x 1.0 in.)	1.9 kg (4.2 lb)
a 1-unit high 2-port STM-1e sparing panel	4.3 cm x 48.3 cm x 2.0 cm (1.7 in. x 19.0 in. x 0.8 in.)	0.68 kg 1.5 lb

Power for a sparing panel

Power is supplied to a sparing panel through at least one control port cable assembly connection between the faceplates of an FP and the sparing panel. When the control port cable is connected from both the main FP and the spare FP, the sparing panel receives power from both and effectively has redundant power input. Some sparing panels indicate by a status LED that power is on. For some sparing panels, the LED also indicates whether the main or spare FP is active, for example, the 2-port STM-1e 1:1 sparing panel (NTPS92AA).

The 1-slot version of the an MSA32 FP provides power to the sparing panel only from the faceplate connection labelled P1 through the Y-cable labelled P1/P3 into the connection P3 at the sparing panel. For the sparing panel to operate, the D-sub connectors at P1 must be cabled.

The 2-slot version of the an MSA32 FP provides power to the sparing panel only through the connections labelled P3 at both ends. For the sparing panel to operate, the D-sub connectors at P3 must be cabled.

Power is cut off when one or more of the following occurs:

- all control port cables between the FP and the sparing panel are disconnected
- the main and spare FPs are unseated
- the source of power is turned off or removed from the main and spare FPs

Termination panel types

Nortel Networks Multiservice Switch 7400 series supports the following termination panel types:

- “Ethernet termination panels” (page 60)
- “V.11 termination panels” (page 63)
- “V.35 termination panels” (page 64)
- “DS1 or E1 termination panels” (page 65)
- “DS3 or E3 termination panels” (page 66)
- “DS3, E3, or JT2 ATM termination panels” (page 68)
- “E1 unbalanced termination panels” (page 71)
- “MSA32 E1 unbalanced BNC termination panel” (page 72)
- “MSA32 DS1 or E1 termination panels” (page 73)
- “2-port STM-1 electrical 1:1 sparing panel” (page 77)
- “BITS termination panel” (page 80)

Ethernet termination panels

The Ethernet termination panel provides a break-out for customer equipment connections and provides each Ethernet port with its own access. These termination panels do not support sparing.

Each termination panel has six standard 10BaseT Ethernet connectors for routing signals to external equipment. Any standard 8-pin 10BaseT Ethernet cable connector (customer-supplied) can be attached to these connectors.

Ethernet termination panels are available in two formats:

- “Ethernet 19” termination panel - PEC NTFP23” (page 60)
- “Ethernet 13” termination panel - PEC NTEP42” (page 61)

Figure 2
Ethernet 19” termination panel - PEC NTFP23

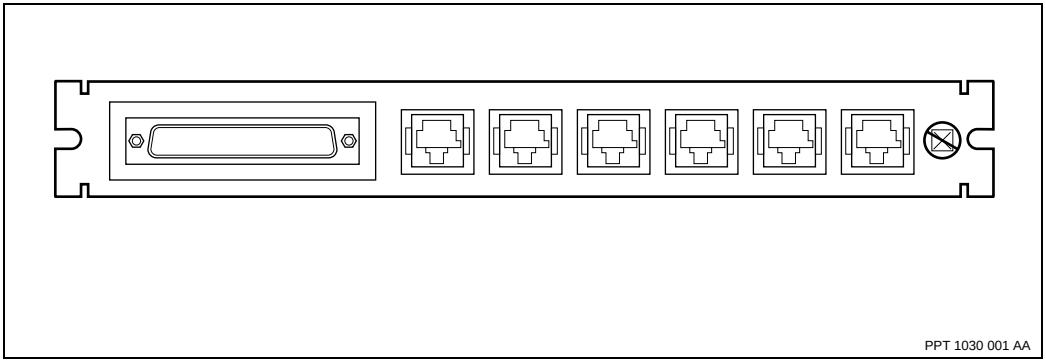

Figure 3
Ethernet 13” termination panel - PEC NTEP42

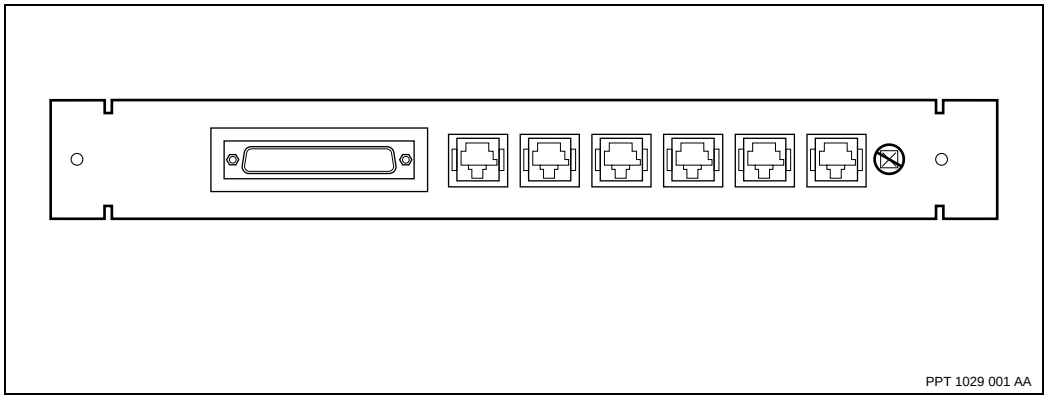

6-port Ethernet 10BaseT redundancy support

The Ethernet termination panels support redundancy through one-for-one sparing. In one-for-one sparing, one FP carries traffic while a spare FP stands by. To spare an Ethernet FP, you must attach the active FP to a termination panel. Attach the spare FP to a separate termination panel and then connect both termination panels to the same network. If the main FP fails, traffic changes to the spare.

Figure 4
6-port Ethernet 10BaseT sparing

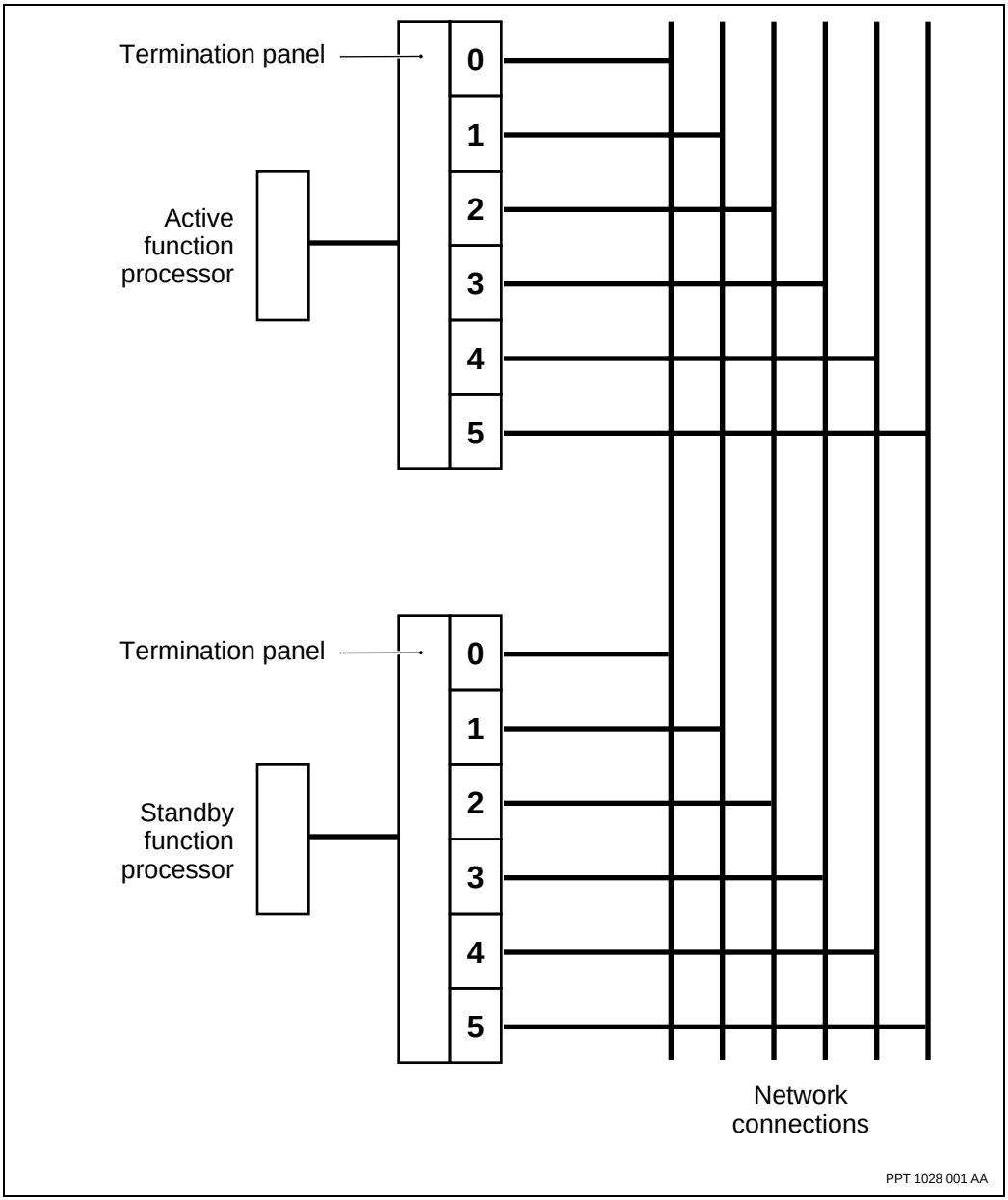

V.11 termination panels

V.11 termination panels provide a break-out for customer-equipment connections so that each V.11 port has its own termination point and access. Termination panels also determine the type of connection (DCE or DTE) depending on which connector is used. These termination panels do not support sparing.

V.11 termination panels are available in two formats:

- “V.11 19” termination panel - PEC NTFP09” (page 63)
- “V.11 13” termination panel - PEC NTEP22” (page 64)

Figure 5
V.11 19” termination panel - PEC NTFP09

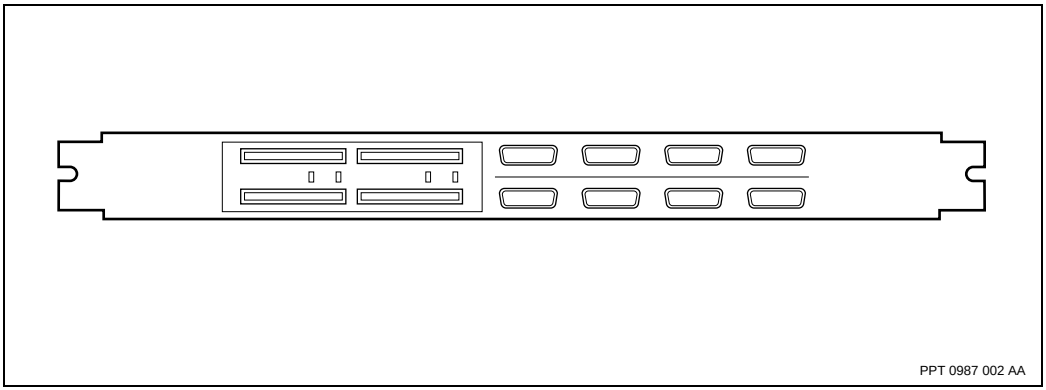

Figure 6
V.11 13” termination panel - PEC NTEP22

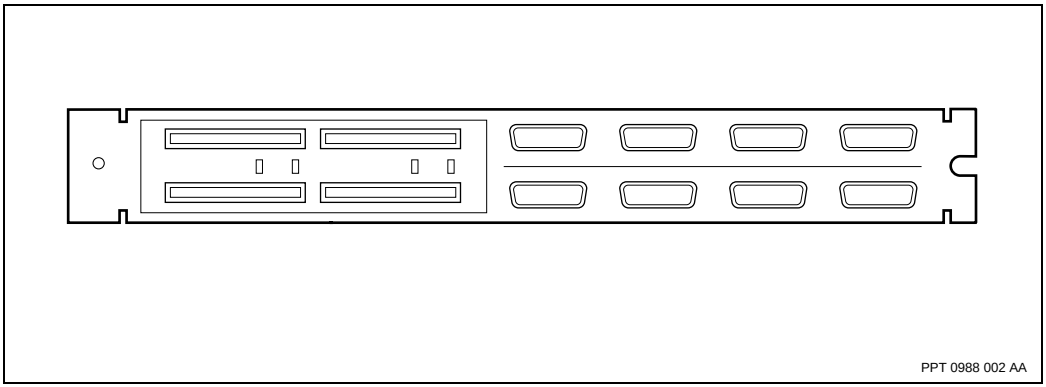

V.35 termination panels

V.35 termination panels provide a break-out for customer equipment connections so that each V.35 port has its own termination point and access. Termination panels also determine the type of connection (DCE or DTE) depending on which connector is used. These termination panels do not support sparing.

V.35 termination panels are available in two formats:

- “V.35 19” termination panels - PEC NTFP08” (page 65)
- “V.35 13” termination panels - PEC NTEP21” (page 65)

Figure 7
V.35 19” termination panels - PEC NTFP08

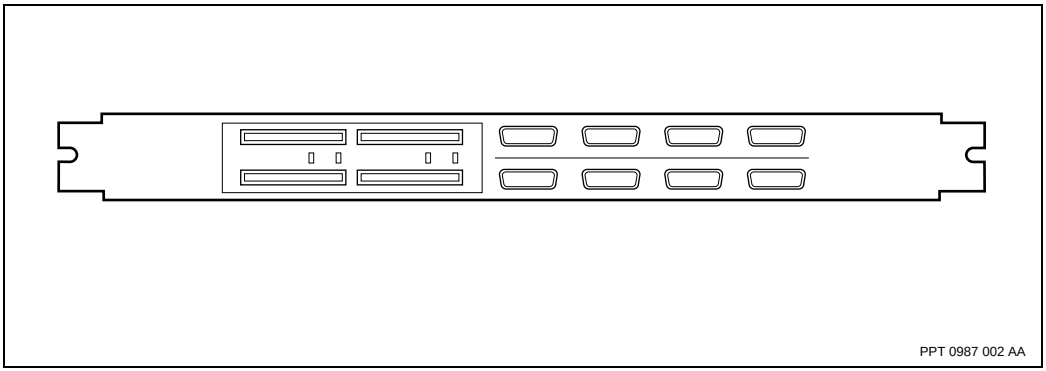

Figure 8
V.35 13” termination panels - PEC NTEP21

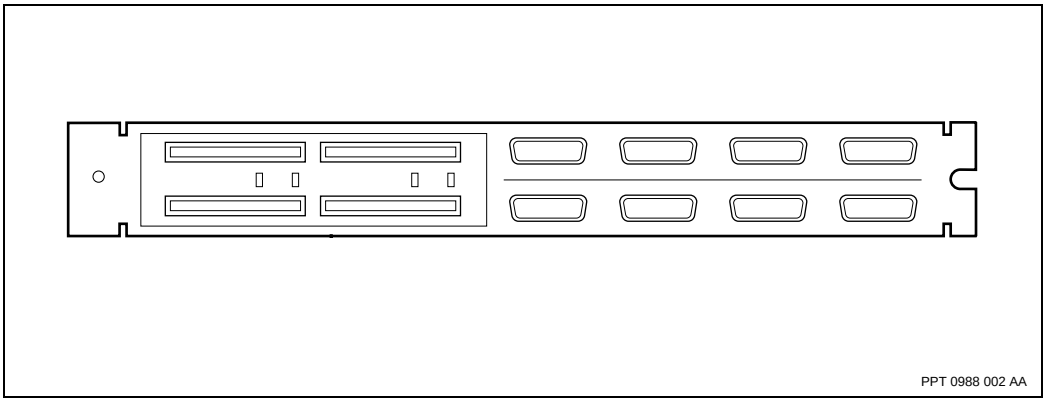

DS1 or E1 termination panels

The DS1 or E1 termination panel provides a break-out for customer equipment connections so that each DS1 or E1 FP port has its own termination point and access. These termination panels support sparing.

DS/E1 termination panels are available in two formats:

- “DS1 or E1 19” termination panel - PEC NTFP10” (page 66)
- “DS1 or E1 13” termination panel - PEC NTEP23” (page 66)

Figure 9
DS1 or E1 19” termination panel - PEC NTFP10

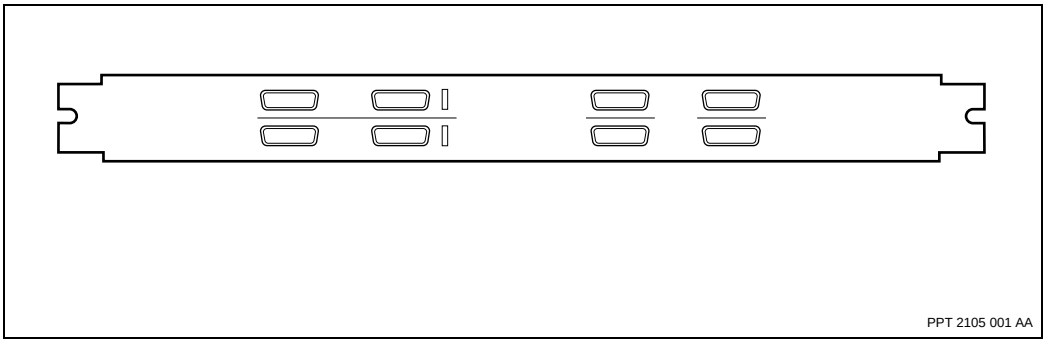

Figure 10
DS1 or E1 13” termination panel - PEC NTEP23

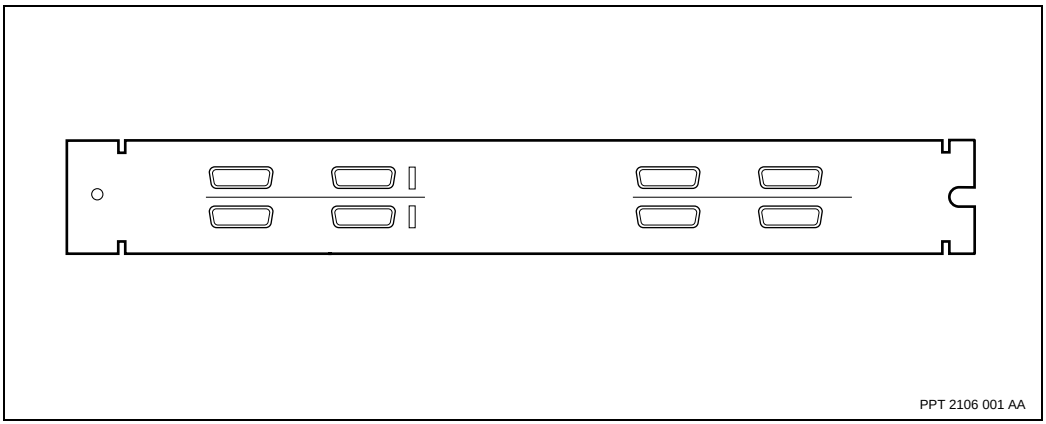

DS3 or E3 termination panels

You can connect customer equipment to a DS3 or E3 FP through a termination panel. The DS3 or E3 termination panel is a cable distribution system that also supports sparing.

DS3 or E3 termination panels are available in two formats:

- “DS3 or E3 19” termination panel - PEC NTBP99” (page 67)
- “DS3 or E3 13” termination panel - PEC NTEP37” (page 67)

Figure 11
DS3 or E3 19” termination panel - PEC NTBP99

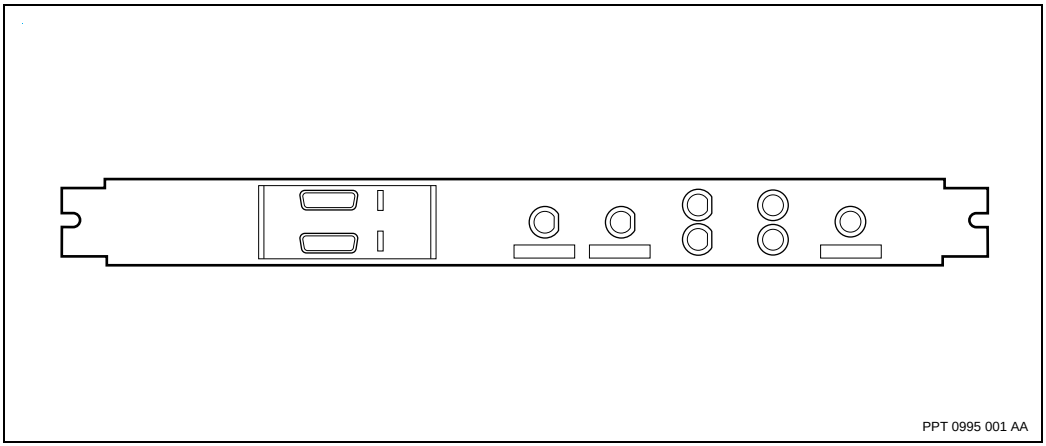

Figure 12
DS3 or E3 13” termination panel - PEC NTEP37

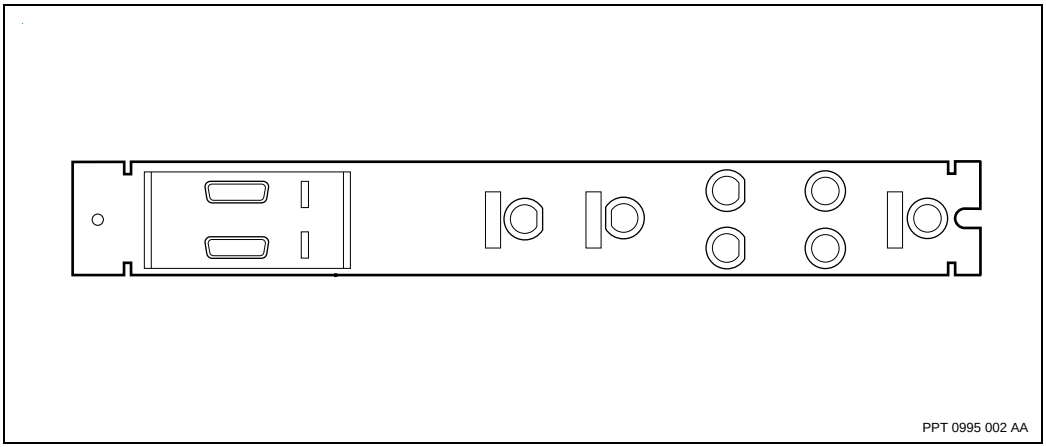

1-port DS3C sparing panel

The 1-port DS3C FP supports both one-for-one and one-for-*n* sparing where *n* is one to four. If you want to use one-for-one sparing, you can connect the spare FP using either a termination panel or a sparing panel. To protect multiple FPs with a single spare, use the DS3C one-for-n sparing panel.

CAUTION
Service interruption
Sparing requires all ports on the spare FP be connected to the termination or sparing panel sparing connectors, whether they are provisioned or not. Failure to do so will result in the termination or sparing panel dropping all ports on the spare FP.

Figure 13
1-port DS3C one-for-n sparing panel

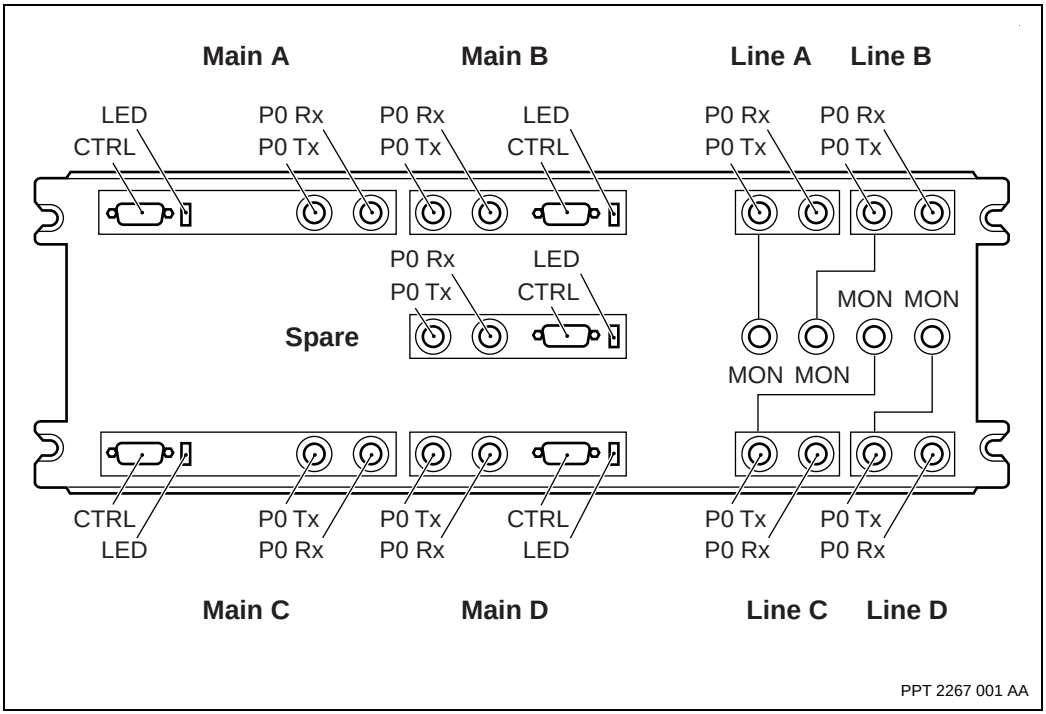

DS3, E3, or JT2 ATM termination panels

You can connect customer equipment directly to the DS3, E3, or JT2 ATM FP or to its termination panel. These termination panels support sparing.

DS3, E3, or JT2 ATM termination panels are available in two formats:

- “DS3, E3, or JT2 ATM 19” termination panel - PEC NTFP99” (page 69)
- “DS3, E3, or JT2 ATM 13” termination panel - PEC NTEP53” (page 69)

The three ports on the right side of this termination panel are used for monitoring transmit output. This allows you to connect third-party equipment for testing and monitoring purposes. See also “DS3, E3, or JT2 ATM 19” termination panel NTFP99, detailed view” (page 70).

Figure 14
DS3, E3, or JT2 ATM 19” termination panel - PEC NTFP99

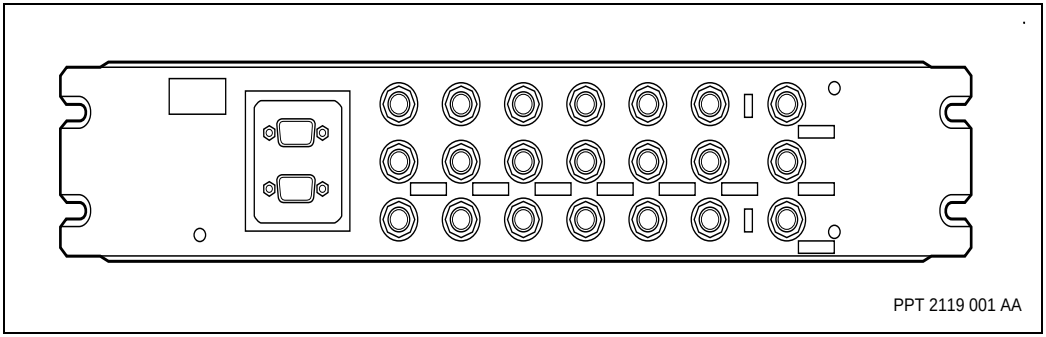

Figure 15
DS3, E3, or JT2 ATM 13” termination panel - PEC NTEP53

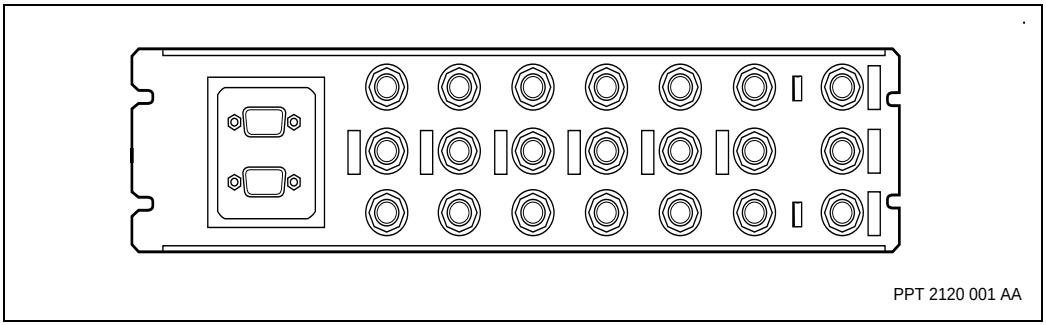

Figure 16
DS3, E3, or JT2 ATM 19” termination panel NTFP99, detailed view

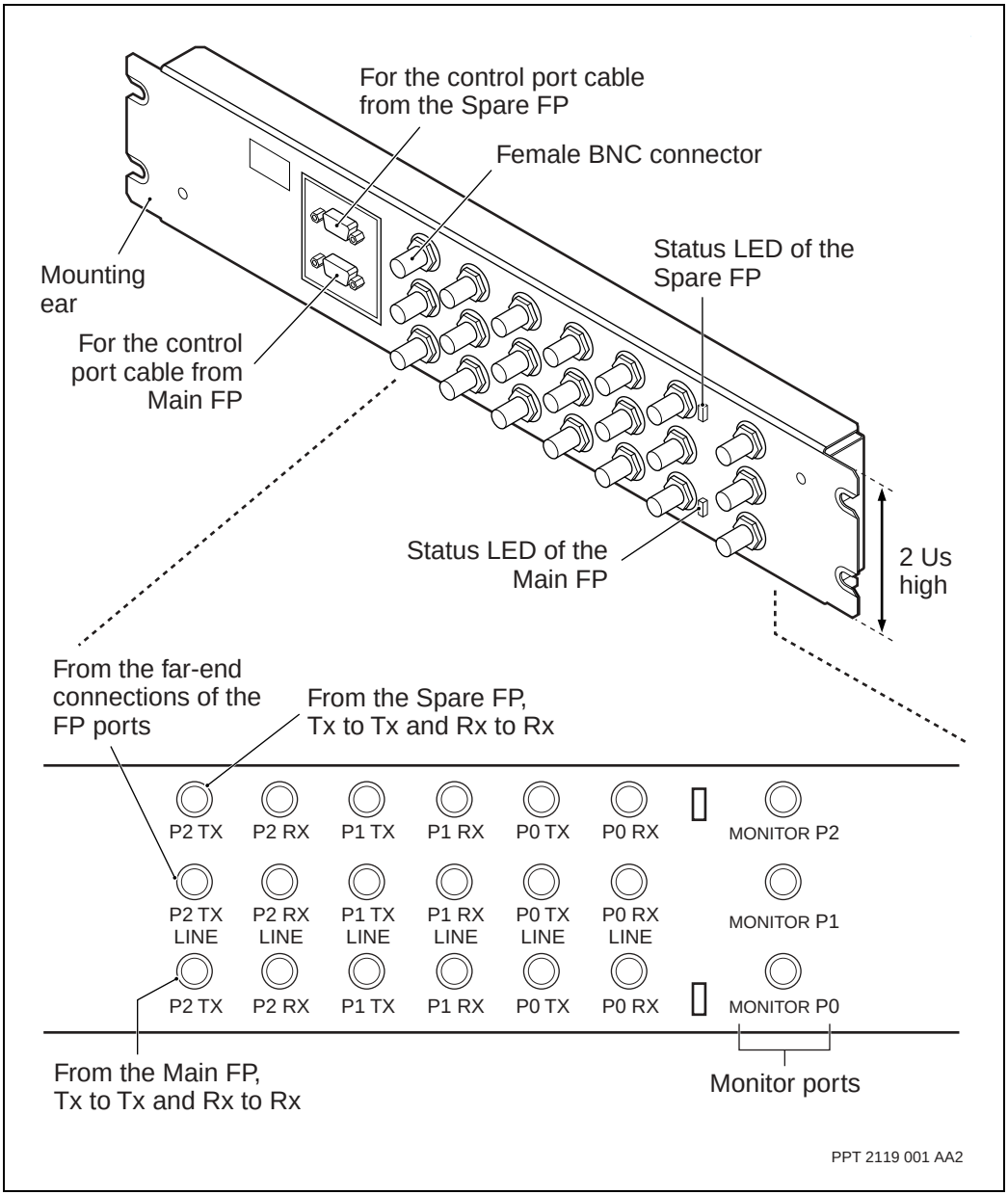

E1 unbalanced termination panels

The E1 unbalanced termination panels provide a break-out for customer-equipment connections so that each E1 port has its own termination point and access. These termination panels support sparing.

One termination panel provides one-for-one sparing for up to four ports. You can spare ports 0–3, or 4–7. For example, a sparing configuration with three ports can use ports 0, 2, and 3, but not ports 0, 2, and 7. Only provision ports that you are going to use. To spare more than four ports, use two E1 termination panels.

E1 unbalanced termination panels are available in two formats:

- “E1 unbalanced 19” termination panel - PEC NTFP11” (page 71)
- “E1 unbalanced 13” termination panel - PEC NTEP24” (page 72)

Figure 17
E1 unbalanced 19” termination panel - PEC NTFP11

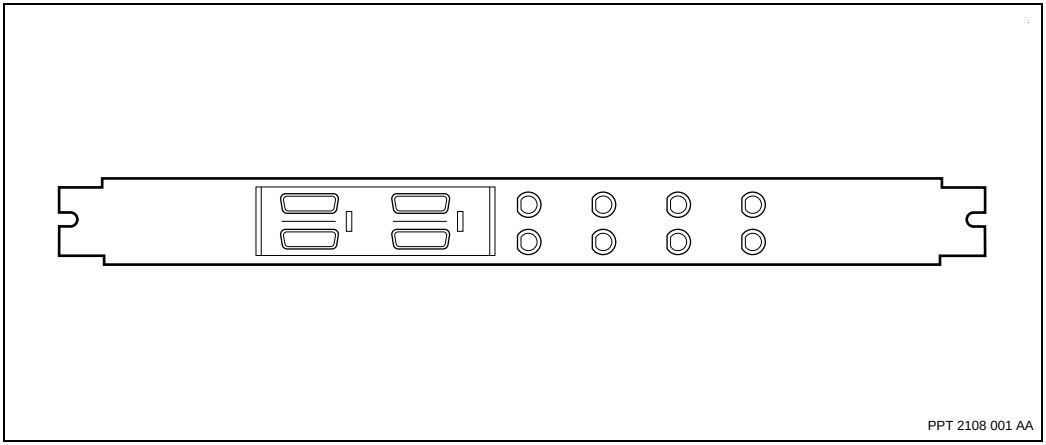

Figure 18
E1 unbalanced 13” termination panel - PEC NTEP24

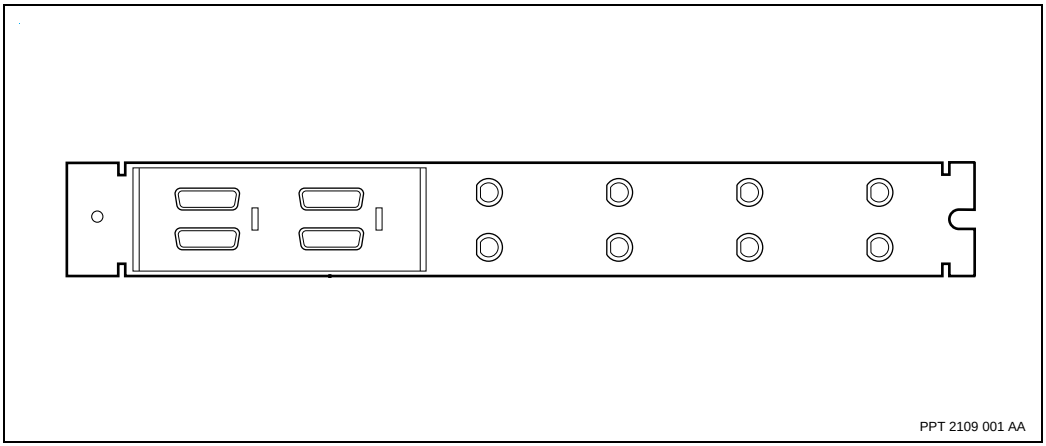

MSA32 E1 unbalanced BNC termination panel

The MSA32 E1 unbalanced BNC termination panel provides a breakout for customer equipment connections, so that each E1 port has its own termination point and access. These termination panels support 1-for-n sparing for the electrical ports on the MSA32 E1 FPs.

The MSA32E1 unbalanced termination panel supports up to one-for-six sparing for the electrical ports on the MSA32 FPs. One panel is needed for each FP and up to six panels can be interconnected to use one spare FP. The setup involves up to six Main FPs and one Spare FP.

The MSA32 E1 unbalanced termination panel has 1 port per BNC connector, as shown in the figure “MSA32 19” E1 unbalanced BNC termination panel - PEC NTY196” (page 73)

The MSA32 E1 unbalanced termination panel is 5 units high. See “MSA32 termination panel dimensions and weights” (page 56) for additional details.

Figure 19
MSA32 19” E1 unbalanced BNC termination panel - PEC NTY196

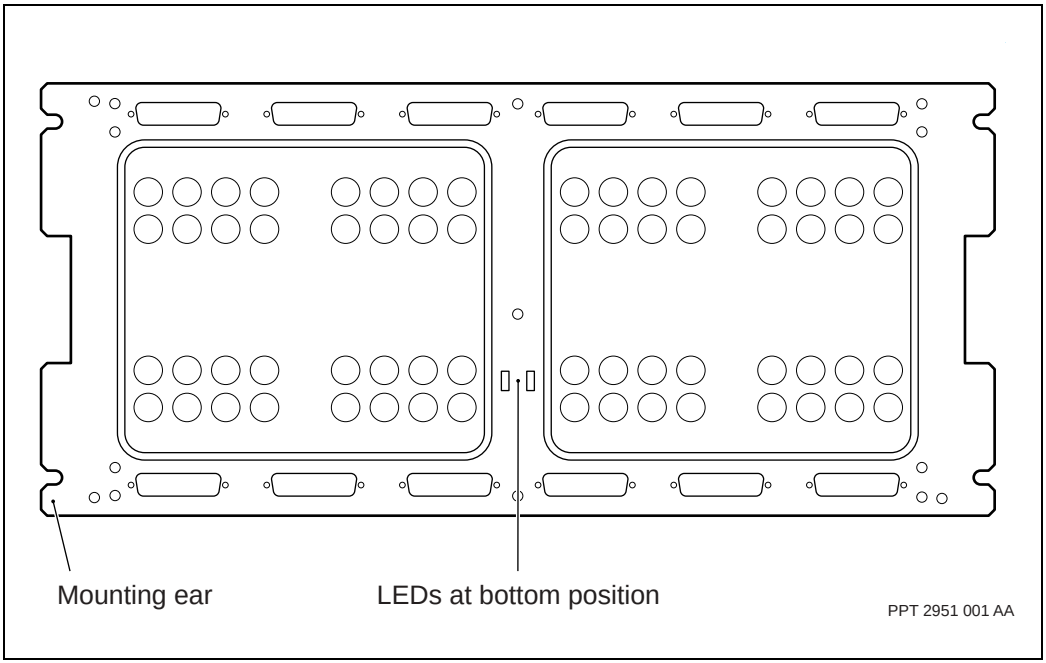

MSA32 DS1 or E1 termination panels

The MSA32 DS1 or E1 termination panels fan out customer equipment connections so that each DS1 or E1 port has its own termination point and access. The MSA32 DS1 or E1 termination panels also support 1-for-n sparing for the electrical ports on the MSA32 DS1 or E1 FPs.

The MSA32 DS1 or E1 termination panels support up to one-for-six sparing for the electrical ports on the MSA32 FPs. One panel is needed for each FP and up to six panels can be interconnected to use one spare FP. The setup involves up to six Main FPs and one Spare FP.

The DS1 or E1 MSA 1-slot and 2-slot FPs use the same termination and sparing panels, and can also share the same panel in a sparing configuration. The FP combinations of all MSA32 sparing configurations are shown in the tables:

- “Sparing combinations of DS1 MSA FPs and sparing panels” (page 259)

- “Sparing combinations of E1 MSA FPs and sparing panels” (page 366)

For the description of the FP-to-sparing-panel cables, see “32-port DS1 MSA cable assemblies for a 2-slot FP and sparing panel” (page 282). NN10600-175 *Nortel Networks Multiservice Switch 7400 Hardware Installation, Maintenance, and Upgrade* contains the tasks for installing an MSA32 FP, its termination or sparing panel, and the cables from the FP to the panel.

MSA32 DS1 or E1 termination panels are available in three formats.

- 1 port per DB15 connector, as shown in the figure “MSA32 19” DS1 or E1 1-port DB15 termination panel - PEC NTY197” (page 75)
- 2 ports per DB15 connector, as shown in the figure “MSA32 19” DS1 or E1 2-port DB15 termination panel - PEC NTY195” (page 76)
- 1 port per RJ-45/RJ-48C connector, as shown in the figures “MSA32 19” DS1 or E1 RJ-45/RJ-48C termination panel - PEC NTJS95, front view” (page 76) and “MSA32 DS1 or E1 RJ-45 or RJ-48C termination panel, bottom view” (page 77)

Figure 20
MSA32 19” DS1 or E1 1-port DB15 termination panel - PEC NTY197

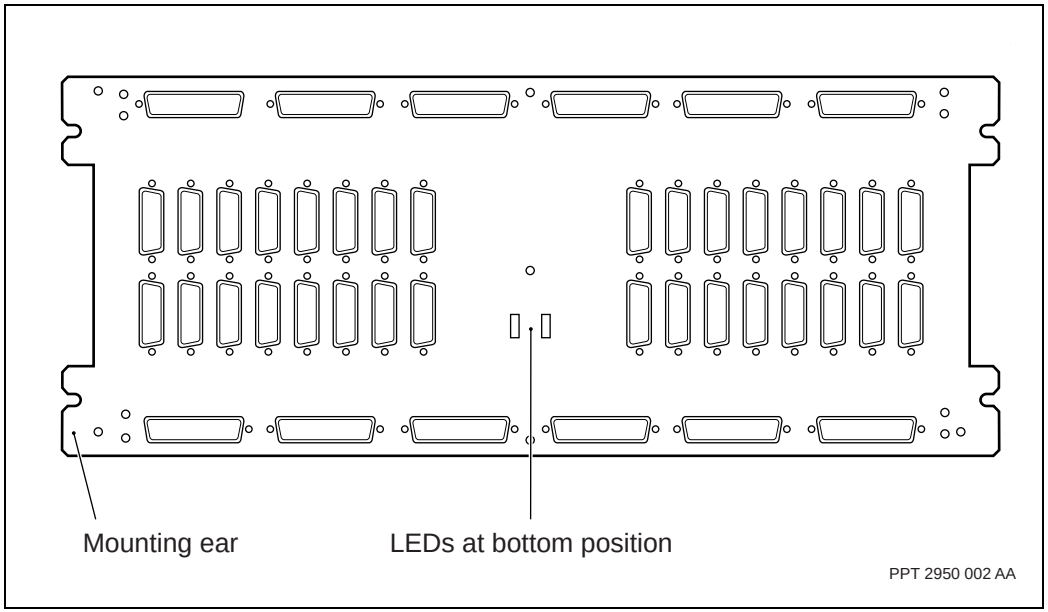

The MSA32 DS1 or E1 19” 1-port/DB15 termination panel is 4 units high. See “MSA32 termination panel dimensions and weights” (page 56) for additional details.

Figure 21
MSA32 19” DS1 or E1 2-port DB15 termination panel - PEC NTY195

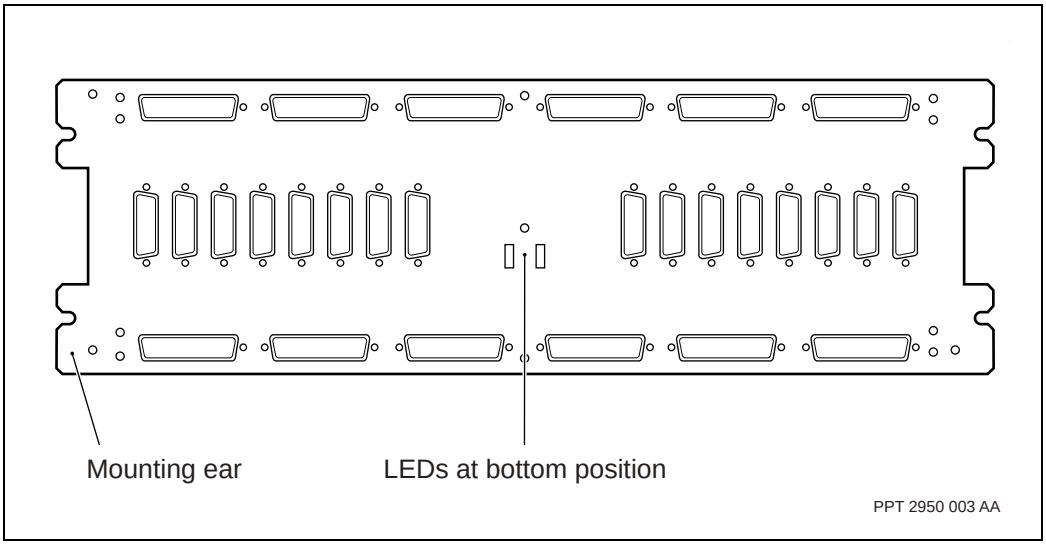

The MSA32 19” DS1 or E1 2-port/DB15 termination panel is 3 units high. See “MSA32 termination panel dimensions and weights” (page 56) for additional details.

Figure 22
MSA32 19” DS1 or E1 RJ-45/RJ-48C termination panel - PEC NTJS95, front view

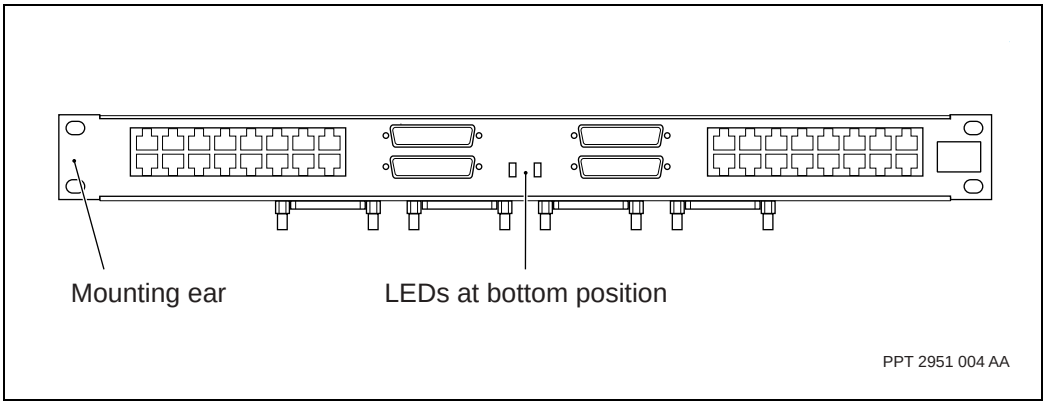

Figure 23
MSA32 DS1 or E1 RJ-45 or RJ-48C termination panel, bottom view

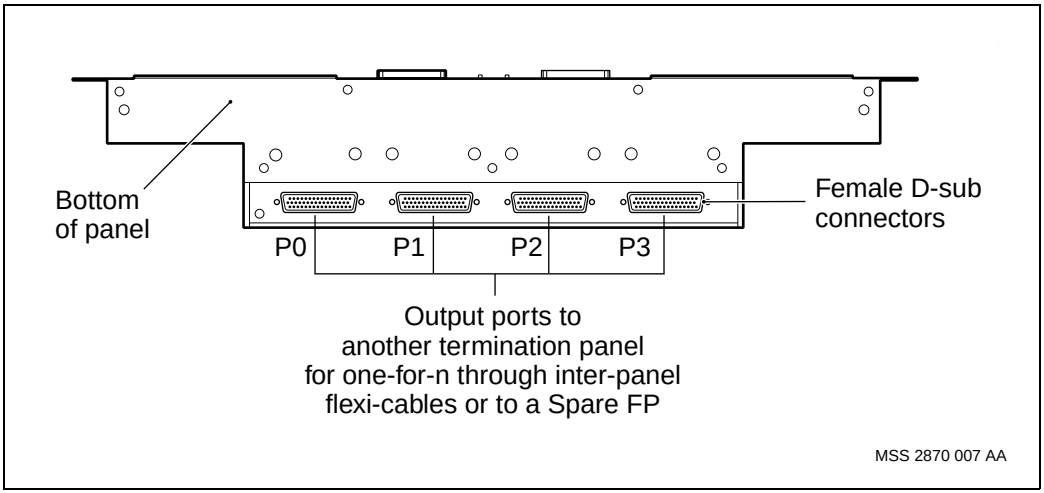

The MSA32 DS1 or E1 RJ-45/RJ-48C termination panel is 1 unit high and requires an additional unit of spacing between panels for cable management. See “MSA32 termination panel dimensions and weights” (page 56) for additional details.

2-port STM-1 electrical 1:1 sparing panel

The 2-port STM-1 electrical (STM-1e) 1:1 sparing panel (NTPS92AA) provides one-for-one sparing between either two 2-port STM-1 electrical ATM IP FPs or two 2-port STM-1 electrical channelized CES/ATM/IMA FPs. As with all Nortel Networks Multiservice Switch one-for-one sparing panels, when the active FP fails, the control processor (CP) directs the standby FP to take over the traffic. The duration of the traffic outage resulting from the switchover varies according to the amount of configuring (provisioning) on the FP.

When a failed STM-1e card is replaced, the replaced card then becomes the standby. An automatic switchback does not occur.

The control cable from each FP provides power to the sparing panel. When the sparing panel is powered, the LED beside the label Main or Spare lights to indicate which FP is active, that is, controls the sparing panel and is being used for traffic.

When power is cut off to a 2-port STM-1e 1:1 sparing panel (NTPS92AA), neither LED is lit and the switchover relay either remains as is. or automatically changes to the main FP as the default position. If the main FP was active, that is, already controlling the traffic, then no traffic is lost. Traffic continues to and from the sparing panel. Without power a switchover of the traffic to the standby FP can not occur. If the standby FP was active, traffic is lost until the sparing panel is powered again.

Loss of power to the sparing panel can be caused by disconnecting either end of the control cables, unseating both FPs, or disrupting any leg of the power input to both FPs. Without power:

- sparing panel status LEDs are not lit
- traffic can continue through the main connections
- traffic cannot continue through the spare connections
- a switchover to the spare FP cannot occur

When power to the 2-port STM-1e 1:1 sparing panel (NTPS92AA) resumes:

- the main connection stays or becomes the active FP provided it is in service
- the LED of the active FP connection lights
- a switchover to the spare can occur provided it is in service
- if the spare FP was the active FP at the time power to the sparing panel was lost, a switchback of traffic from the main to the spare connection does not occur automatically, and is not necessary

The PEC of the sparing panel is NTPS92AA. Physical characteristics are listed in “Sparing panel dimensions and weights” (page 58) and shown in the figure “2-port STM-1e 1:1 sparing panel - PEC NTPS92AA” (page 79).

Operational specifications are listed in “Compliances of the 2-port STM-1e one-for-one sparing panel (NTPS92AA)” (page 83).

The 2-port STM-1e 1:1 sparing panel has SMB BT43 (or SMZ) connectors, the same as the 2-port STM-1 electrical ATM IP FP and the 2-port STM-1 electrical CES/ATM/IMA FPs. For the description of the cable assemblies, see also “2-port STM-1 electrical cable assemblies” (page 449).

Figure 24
2-port STM-1e 1:1 sparing panel - PEC NTPS92AA

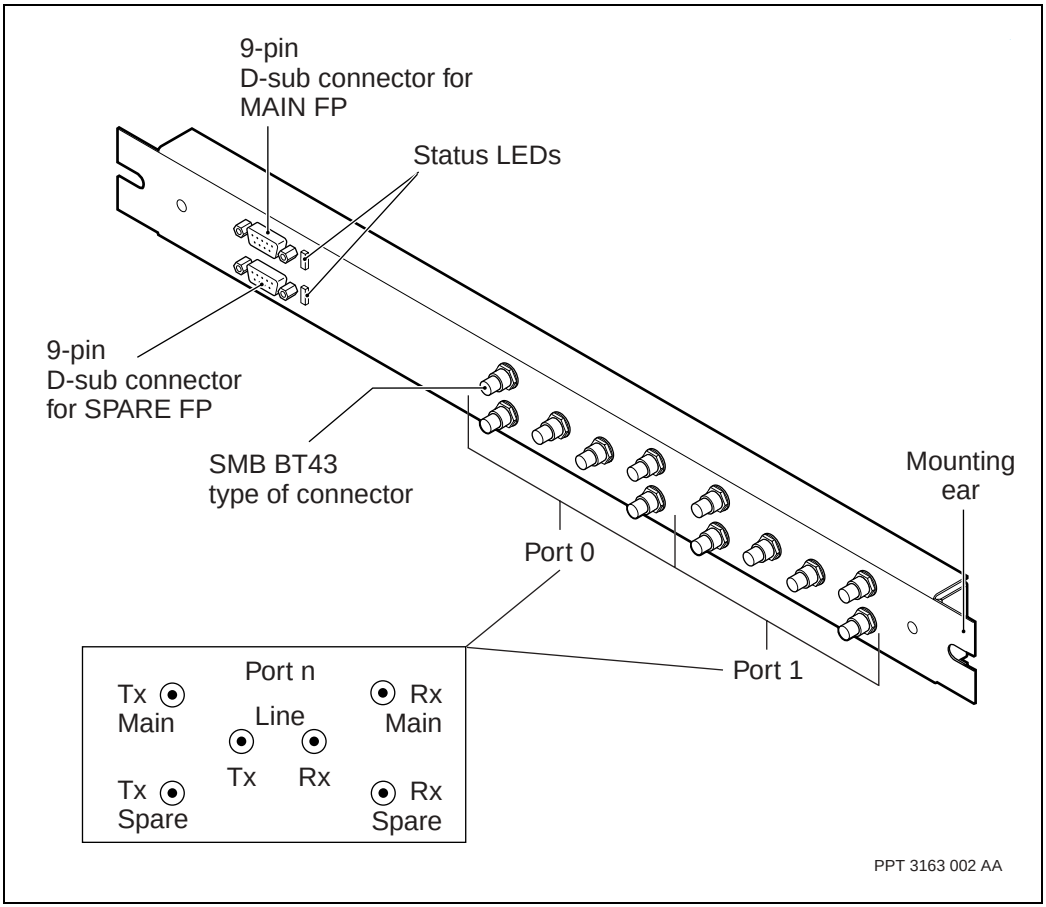

BITS termination panel

The BITS termination panels (NTPS13) work together with the CP-with-BITS (NTNQ03) and BITS termination panel cables (NTPS18) to provide external timing functionality.

See the following sample figures:

- “BITS termination panel - 13” unbalanced (PEC NTPS13BA)” (page 81)
- “BITS termination panel - 19” balanced (PEC NTPS13AB)” (page 82)

A BITS termination panel:

- splits and delivers input timing signals to the active and standby CPs
- provides over-voltage and current protection, plus EMI filtering
- has a dip switch on the faceplate for specifying one-CP or two-CP configurations
- is available in the different formats listed in the table “BITS termination panels” (page 80)
- uses the cables listed in the table “BITS termination panel cables for CP-with-BITS” (page 81)

Table 5
BITS termination panels

Termination panel	Termination panel PEC
13” balanced (for E1/DS1 balanced sources)	NTPS13AA
13” unbalanced (for E1 unbalanced sources)	NTPS13BA
19” balanced (for E1/DS1 balanced sources)	NTPS13AB
19” unbalanced (for E1 unbalanced sources)	NTPS18BB

Table 6
BITS termination panel cables for CP-with-BITS

Cable	Length	Cable PEC
E1 termination panel cable use with 13” termination panels	81.3 cm (32 in.)	NTPS18AA
E1 termination panel cable use with 19” rack-mounted termination panels	3 m (9.8 ft)	NTPS18BA

For installation information, see NN10600-175 *Nortel Networks Multiservice Switch 7400 Hardware Installation, Maintenance, and Upgrade*.

Figure 25
BITS termination panel - 13” unbalanced (PEC NTPS13BA)

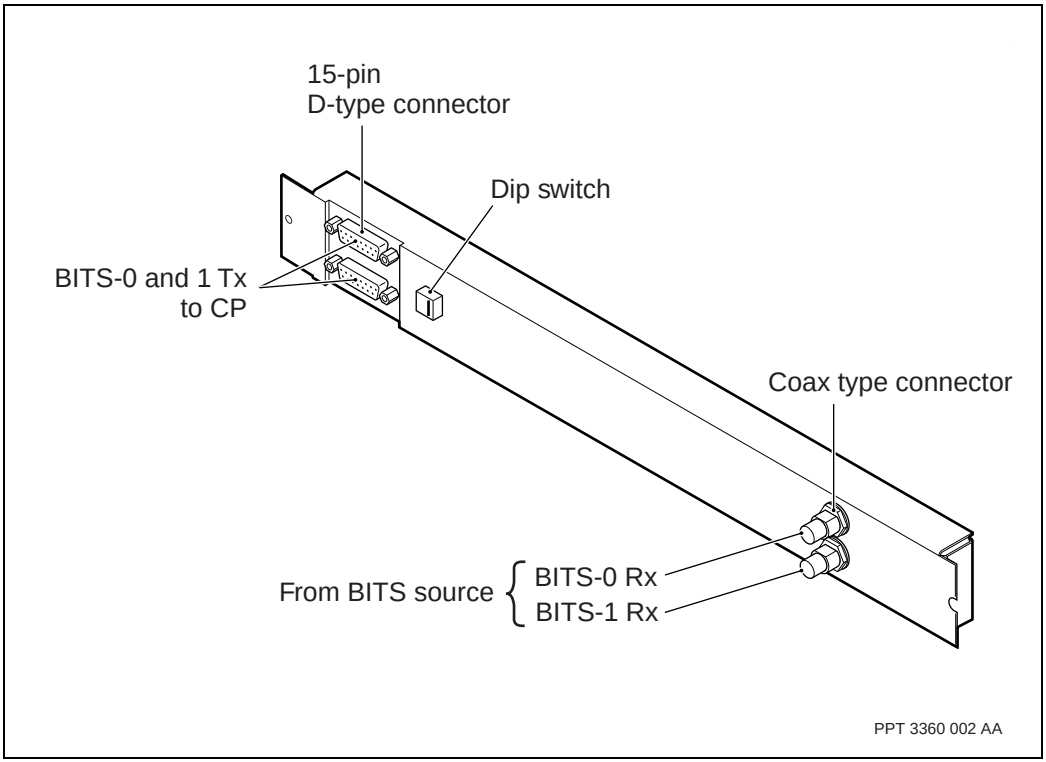

Figure 26
BITS termination panel - 19” balanced (PEC NTPS13AB)

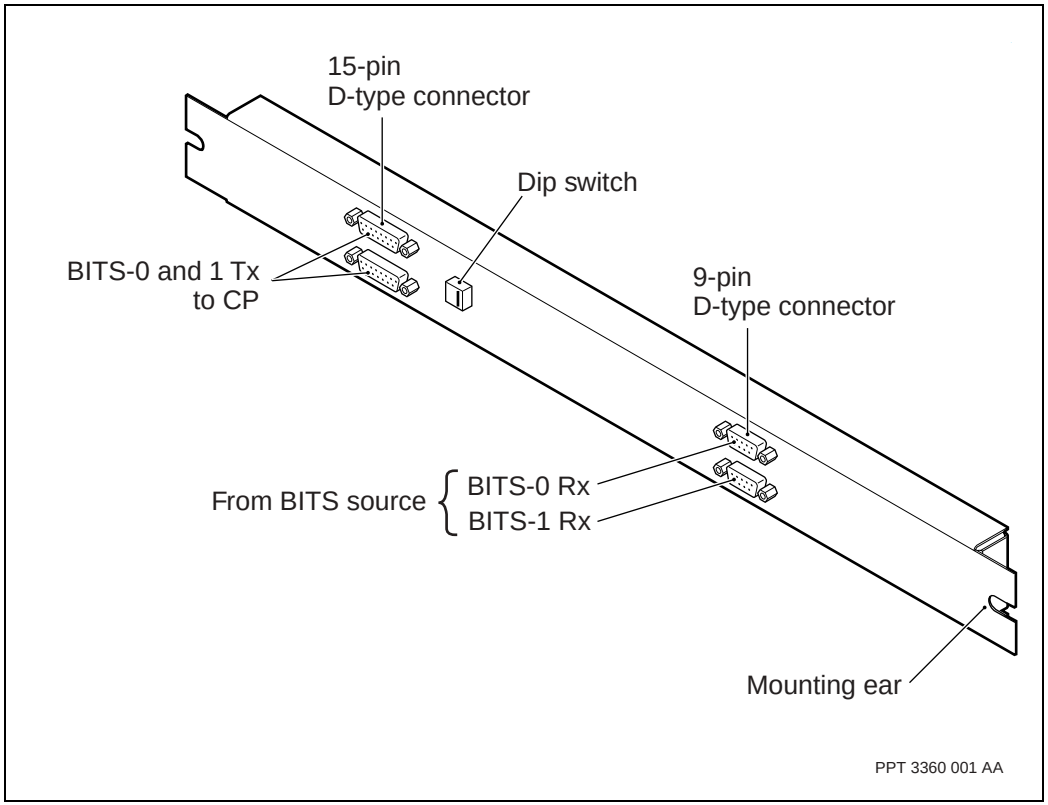

Sparing panel compliance with standards

Nortel Networks Multiservice Switch sparing panels comply with the applicable sections of these interface and safety standards:

- ANSI T1.102, 1989, section 6.4.2
- ANSI T1.107, 1988
- Telcordia GR-499-CORE issue 1, section 9.6.2
- IEC950, EN60950, EN41003
- EMC
- EN55022, GR-1089 Issue 3 October 2002, FCC pt15, Class A
- EN50082-1 Immunity standard

Compliances of the 2-port STM-1e one-for-one sparing panel (NTPS92AA)

- “STM-1e interface compliance” (page 83)
- “STM-1e safety compliance” (page 83)
- “STM-1e EMC compliance” (page 84)
- “STM-1e environmental compliance” (page 84)

The compliances of the 2-port STM-1 electrical sparing panel include:

STM-1e interface compliance

The STM-1 electrical one-for-one sparing panel (NTPS92AA) complies to the ITU-T specification G.703 ([15)] with the interface at 155.52 Mbit/s. Since the sparing panel uses relays, it is considered part of the cabling and complies to G.703. This means the sparing panel is not required to meet the classifications for port or cross-connect.

STM-1e safety compliance

The STM-1 electrical 1:1 sparing panel (NTPS92AA) complies to the following

- EN 60950 for European Union, VDE or TUV assessed
- IEC 950 and IEC 60950, national versions for countries that accept CSA C22.2 No. 950, UL 1950, or EN 60950

- EN 60950 and ETS 300 253 for lightening protection, earthing and grounding
- EN 60950 for frame-level fire-resistance criteria
- EN 60950 for fire-resistant materials, components, wiring, and cables
- EN 60529, 1992 ([IP20]) for protection provided by enclosures (customer specific)

STM-1e EMC compliance

The STM-1 electrical 1:1 sparing panel (NTPS92AA) complies to the following

- EN 300-386-2 sec. 5.1.1.3 (EN 55022, Class B) for radiated emissions
- EN 300-386-2 sec. 5.1.5.3 (ETS 300-386-1, sub clause 7.2.3) and EN 55022 for conducted emissions
- EN 300-386-2 sec. 5.1.1.2 (EN 61000-4-3) for radiated RF immunity
- EN 61000-6-2 replaces EN 50082-2 for conducted RF immunity (customer specific)
- EN 300-386-2 sec. 5.1.3.1, 5.1.5.1 (EN 61000-4-4) and EN 55024 for electrical fast transient signal cables
- EN 300-386-2 sec. 5.1.3.2 (EN 61000-4-5, ETS 300 386-1, sub clause 6.4.2) and EN 55024 for power surges
- EN 300-386-2 sec. 5.1.1.1, 5.1.1.4 (EN 61000-4-2) and EN 55024 for electrostatic discharge (ESD)

STM-1e environmental compliance

The STM-1 electrical 1:1 sparing panel (NTPS92AA) compliances are as follows:

- ETS 300 753 Oct 97 (Operation Class 3.1 Telecommunications room unattended); the climatic requirement for acoustic noise at 60dBA is ISO 7779 (1).
- ETS 300 019-2-1 (2000-09), Storage Class 1.2 weather-protected not temperature controlled in the table “ETS 300 019-2-1 storage compliance for an STM-1e 1:1 sparing panel (NTPS92AA)” (page 85)

- ETS 300 019-2-2 (1999-09), Transportation Class 2.3 public transportation in the table “ETS 300 019-2-2 transportation compliance for an STM-1e 1:1 sparing panel (NTPS92AA)” (page 86)
- ETS 300 019-2-3 (1999-09), Operation Class 3.1E temperature controlled in the table “ETS 300 019-2-3 operation compliance for an STM-1e 1:1 sparing panel (NTPS92AA)” (page 86)
- in the table “Thermal compliance for the 2-port STM-1e 1:1 sparing panel (NTPS92AA)” (page 87)

Table 7
ETS 300 019-2-1 storage compliance for an STM-1e 1:1 sparing panel (NTPS92AA)

Compliance name		Compliance
low temperature storage	-25° C (-13° Fahrenheit) for 72 hours	IEC 60068-2-1 Ab, cold
high temperature storage	+55° C (+131° F) for 72 hours	IEC 60068-2-2 Bb, dry heat
high humidity storage (relative)	93% RH at +30° C (+86° F) for 4 days	IEC 60068-2-56 Cb, damp heat steady state
condensation humidity storage (relative)	90 to 100% RH at +30° C (+86° F) for 2 cycles	IEC 60068-2-30 Db, damp heat cyclic variant 1
storage vibration		IEC 60068-2-6 Fc, vibration sinusoidal IEC 60068-2-64 Fh, vibration random

Table 8
ETS 300 019-2-2 transportation compliance for an STM-1e 1:1 sparing panel (NTPS92AA)

Compliance name		Compliance
low temperature	-40° C (-40° F) for 72 hours	IEC 60068-2-1 Ab, cold
high temperature	+70° C (+158° F) for 72 hours	IEC 60068-2-2 Bb, dry heat
air temperature change	-40 to +30° C (-40 to +86° F) at 1° C (33.8° F) per minute for 5 cycles	IEC 60068-2-14 Nb, change of temperature
humidity (relative) for slow temperature change	93% RH at 40° C (104° F) for 4 days	IEC 60068-2-56 Cb, damp heat steady state
humidity (relative) for rapid temperature change	90 to 100% RH at 40° C (104° F) for 2 cycles	IEC 60068-2-30 Db, damp heat cyclic variant 1
vibration		IEC 60068-2-36 Fdb, random, vibration, wideband
shock		IEC 60068-2-29 Eb, bump
fall		IEC 60068-2-32 Ed, free fall procedure 1

Table 9
ETS 300 019-2-3 operation compliance for an STM-1e 1:1 sparing panel (NTPS92AA)

Compliance name		Compliance
low temperature	-5° C (23° F) for 16 hours	IEC 60068-2-1 Ab/Ad, cold
high temperature	45° C (113° F) for 16 hours	IEC 60068-2-2 Bb/Bd, dry heat

(Sheet 1 of 2)

Table 9 (continued)
ETS 300 019-2-3 operation compliance for an STM-1e 1:1 sparing panel (NTPS92AA)

Compliance name		Compliance
air temperature change	25 to 45° C (77 to 113° F) at 0.5^{o} C (32.9^{o} F) per minute for 1/2 cycle	IEC 60068-2-14 Nb, change of temperature
high humidity (relative)	93% RH at 30° C (86° F) for 4 days	IEC 60068-2-56 Cb, damp heat steady state
shock, 3 in each direction		IEC 60068-2-27 Ea, shock
(Sheet 2 of 2)		

Table 10
Thermal compliance for the 2-port STM-1e 1:1 sparing panel (NTPS92AA)

Compliance name	Compliance, test method, or distinction
heat dissipation	GR-63-CORE Issue 2 April 2002, R4-11, O4-12, O4-13, tested by office fluoroscope
operational altitude at -60 to 1800 m (-192.86 ft to 2,624 ft) above sea level	GR-63-CORE Issue 2 April 2002, R4-8
operational altitude at 4000 m (13,124 ft) above sea level	GR-63-CORE Issue 2 April 2002, R4-9

Chapter 3
Cables

See these sections for information on function processor (FP) card cables:

- “Cable description” (page 90)
- “Cable considerations” (page 90)
- “Function processor cable assemblies” (page 91)

WARNING
Risk of personal injury
Multiservice Switch interfaces must only be connected to Safety Extra-Low Voltage (SELV) circuits. Connections to Telephone Network Voltage (TNV) circuits must be through an external device that provides current protection and isolation, such as an approved Channel Service Unit (CSU). All such devices must meet the equipment safety standards of the country of installation.

WARNUNG
Verletzungsgefahr
Verbinden Sie Multiservice Switch-Schnittstellen nur mit SELV-Schaltungen (Schutzkleinspannung). Verbindungen zu TNV-Schaltungen müssen über ein externes Gerät erfolgen, das Stromschutz und -isolierung bietet, z.B. eine geprüfte Kanaldiensteinheit (CSU, Channel Service Unit). Alle Geräte müssen den Sicherheitsstandards des jeweiligen Landes entsprechen.

Cable description

There are two types of cables used to connect a function processor (FP) to the network, or a control processor (CP) to network management equipment:

- card cables, which connect an FP to a termination panel or a CP (available from Nortel Networks)
- customer equipment cables, which connect Nortel Networks equipment to equipment supplied by the customer

Customers are responsible for providing the cable to connect from line equipment to the FPs. Cables are to conform to specifications available from Nortel Networks.

There are three typical card cable lengths available from Nortel Networks:

- 1-m (3-ft) cable, used to connect the FP to the 13-inch termination panel mounted on the back of a Nortel Networks Multiservice Switch 7420 or a Multiservice Switch 7440
- 3-m (10-ft) cable, used to connect with the equipment
- 15-m (49-ft) cable, used to connect the FP to a termination panel mounted in a separate cabinet or rack

Card cables provided by Nortel Networks are shielded. The shield is grounded at both ends of the cable. Cable ends are grounded to a common grounding point through the card connector, card faceplate, and shelf assembly. For more information about equipment grounding, see NN10600-175 *Nortel Networks Multiservice Switch 7400 Hardware Installation, Maintenance, and Upgrade*.

Cable considerations

Since the maximum cable length of a prefabricated cable assembly that is provided by Nortel Networks is 15 m (49 feet), the distance between a shelf and an associated termination panel is also limited. The worst-case scenario occurs when a device is in a Nortel Networks Multiservice Switch cabinet and a termination panel is in a separate, 2-m (6.5-ft) high 19-in. rack. If cables must be routed from the base of the device to the base of the rack via the top of these units, the rack must be within 9 m (29 feet) of the device.

In some cases, a 15-m (49-ft) cable can reduce the data rate of the link to a level of unacceptable degradation.

Cables between termination panels and devices are type UL1581 and not suitable for routing in plenums or ducts. If you are routing in a vertical shaft or plenum, use cables that meet UL1666 requirements. If you are routing in an air duct, use cables that meet UL910 requirements. Cables supplied by Nortel Networks meet UL1581 requirements and have passed the UW-1 vertical wire flame test.

Function processor cable assemblies

For information about cable assemblies for specific function processors (FPs), see:

- “1-port DS1 voice cable assembly” (page 210)
- “1-port DS1 MVP-E cable assembly” (page 214)
- “4-port DS1 MVP-E cable assembly” (page 218)
- “3-port DS1 ATM cable assembly” (page 223)
- “4-port DS1 AAL1 cable assembly” (page 228)
- “8-port DS1 ATM cable assembly” (page 233)
- “4-port DS1 frame relay cable assembly” (page 240)
- “4-port DS1C cable assembly” (page 245)
- “8-port DS1 cable assembly” (page 250)
- “32-port DS1 MSA prefabricated cable assemblies for FPs and sparing panels” (page 260)
- “32-port DS1 MSA custom-made cable assemblies for FPs and sparing panels” (page 268)
- “1-port DS3 cable assembly” (page 300)
- “2-port DS3C TDM cable assembly” (page 308)
- “3-port DS3 ATM cable assembly” (page 310)
- “3-port DS3 ATM IP cable assembly” (page 313)
- “1-port E1 MVP-E balanced cable assembly” (page 318)

- “1-port E1 MVP-E unbalanced cable assembly” (page 318)
- “4-port E1 MVP-E balanced cable assembly” (page 322)
- “4-port E1 MVP-E unbalanced cable assembly” (page 322)
- “4-port E1 balanced cable assembly” (page 328)
- “4-port E1 unbalanced cable assembly” (page 329)
- “4-port E1C balanced cable assembly” (page 333)
- “4-port E1C unbalanced cable assembly” (page 334)
- “3-port E1 ATM balanced cable assembly” (page 338)
- “3-port E1 ATM unbalanced cable assembly” (page 339)
- “4-port E1 AAL1 balanced cable assembly” (page 343)
- “4-port E1 AAL1 unbalanced cable assembly” (page 344)
- “8-port E1 ATM balanced cable assembly” (page 349)
- “8-port E1 ATM unbalanced cable assembly” (page 350)
- “32-port E1 TDM cable assembly” (page 361)
- “32-port E1 MSA prefabricated cable assemblies for FPs and sparing panels” (page 367)
- “32-port E1 MSA custom-made cable assemblies for FPs and sparing panels” (page 375)
- “1-port E3 cable assembly” (page 405)
- “3-port E3 ATM cable assembly” (page 408)
- “3-port E3 ATM IP cable assembly” (page 411)
- “2-port Ethernet 100BaseT cable assemblies” (page 425)
- “6-port Ethernet 10BaseT cable assemblies” (page 434)
- “4-port Ethernet 100BaseT cable assemblies” (page 428)
- “8-port Ethernet 100BaseT cable assemblies” (page 440)
- “1-port HSSI cable assembly” (page 481)
- “2-port JT2 ATM cable assembly” (page 489)

- “3-port OC-3 ATM cable assembly” (page 414)
- “2-port OC-3 ATM IP cable assembly” (page 419)
- “OC-3 cable assembly for optical ports on a 32-port DS1 MSA 2-slot FP” (page 292)
- “2-port STM-1e prefabricated cable assemblies” (page 449)
- “2-port STM-1e custom-made cable assemblies” (page 451)
- “TTC2M MVP-E cable assembly” (page 492)
- “8-port V.11 cable assembly” (page 455)
- “8-port V.35 cable assembly” (page 467)

Chapter 4
Multiservice Switch 7420

See the following sections for information about Nortel Networks Multiservice Switch 7420:

- “Multiservice Switch 7420 shelf assembly” on page 95
- “Multiservice Switch 7420 configurations” on page 98
- “Multiservice Switch 7420 termination panels” on page 100
- “Multiservice Switch 7420 environmental requirements” on page 100
- “Multiservice Switch 7420 ventilation and access clearances” on page 102
- “Multiservice Switch 7420 dc power source requirements” on page 103
- “Multiservice Switch 7420 grounding requirements” on page 104
- “Multiservice Switch 7420 cabling requirements” on page 105
- “Compliance to electrical and safety standards” on page 105
- “Multiservice Switch 7420 standards compliances” on page 105

Multiservice Switch 7420 shelf assembly

A fully-installed Nortel Networks Multiservice Switch 7420 consists of a CP installed in slot 0 of a 3-slot chassis with an integrated dc power supply. The remaining two slots support function processors (FPs). Multiservice Switch 7420 supports all CPs and FPs offered for the Multiservice Switch 7400 series with the exception of VSP1, VSP2, and the VPN extender card.

All hardware modules for power conversion, cooling, and cable management integrate into its chassis. See “Multiservice Switch 7420” on page 96 for an illustration of the front and rear views.

Figure 27
Multiservice Switch 7420

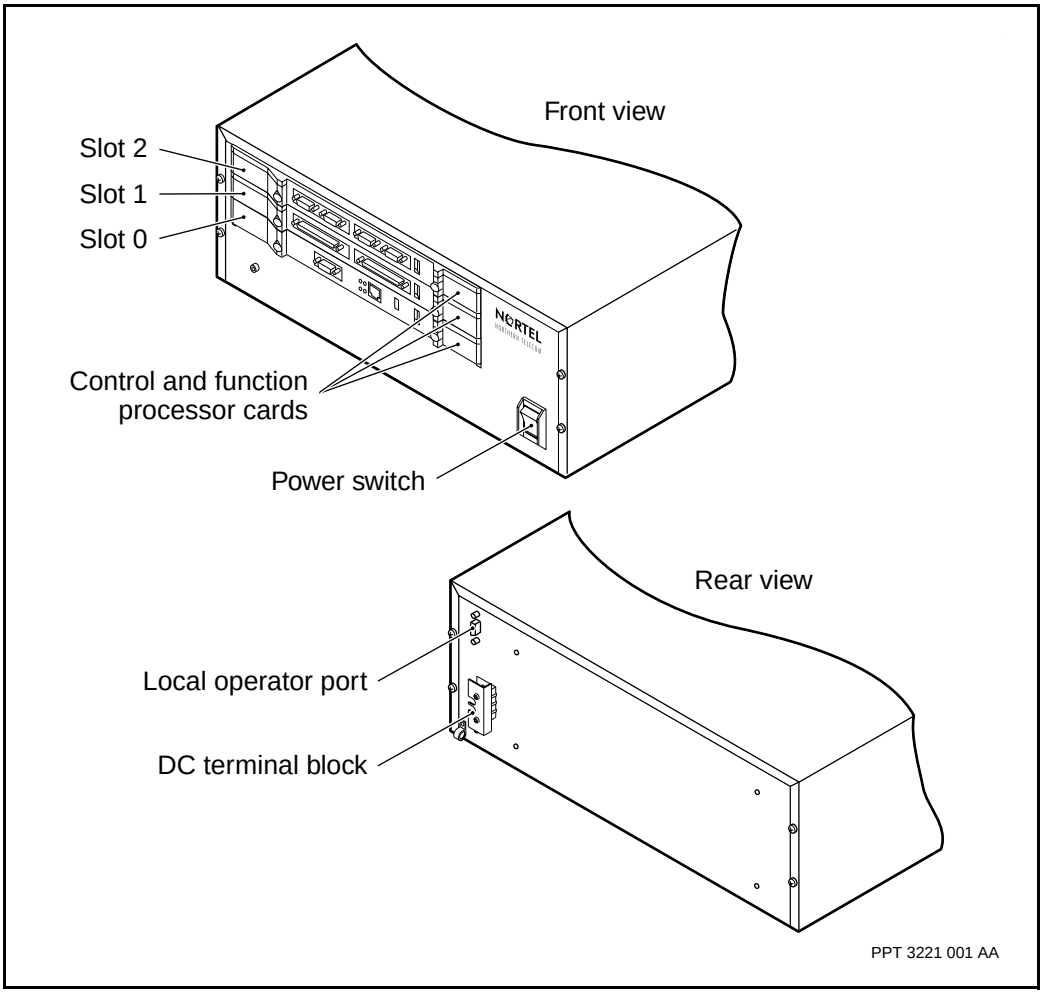

Multiservice Switch 7420 dimensions and weights

The following table summarizes the approximate dimensions and weights of a Nortel Networks Multiservice Switch 7420.

Table 11
Multiservice Switch 7420 dimensions and weights

Equipment	Outside dimensions (height x width x depth)	Weight
fully-configured, 1 chassis, 1 cp, 2 fps, 2 termination panels (excluding cables), with 4 feet in a desktop mount installation	15.8 x 40.6 x 52.4 cm (6.25 x 16.0 x 20.63 inches)	16.82 kg (37 lb)
fully-configured, 1 chassis, 1 CP, 2 FPs, 2 termination panels (excluding cables), in a rack-mount installation	13.3 x 49.2 x 52.4 cm (5.25 x 19.38 x 20.38 inches)	17.05 kg (37.5 lb)
fully-configured, 1 chassis, 1 CP, 2 FPs, 2 termination panels (excluding cables), in a seismic cabinet	14.1 x 49.2 x 52.4 cm (5.53 x 19.38 x 20.38 inches)	17.73 Kg (39.0 lb)
fully-configured, 1 chassis, 1 CP, 2 FPs, 2 termination panels (excluding cables), in a vertical mount installation	51.7 x 18.8 x 51.7 cm (20.45 x 7.40 x 20.75 inches)	17.27 kg (38 lb)
chassis (empty) in a desktop mount installation	15.8 cm x 40.64 cm x 48.74 cm (6.25 x 16.0 x 20.35 inches)	11.48 kg (25.3 lb)
chassis (empty) in a rack-mount installation	13.3 x 49.2 x 51.7 cm (5.25 x 19.38 x 20.35 inches)	12.18kg (26.8 lb)
chassis (empty) in a vertical mount installation	51.9 x 18.8 x 51.7 cm 20.43 x 7.40 x 20.35 inches)	12.20 kg (26.8 lb)

Multiservice Switch 7420 configurations

Nortel Networks Multiservice Switch 7420 supports four different mounting configurations. See the figure “Mounting options for Multiservice Switch 7420” on page 99:

In the desktop and rack-mount configurations, the cable guides are located on the left side. In a vertical configuration, cable guides are located at the top. Cable guides route the cables from the FPs at the front to the termination panels at the rear.

Figure 28
Mounting options for Multiservice Switch 7420

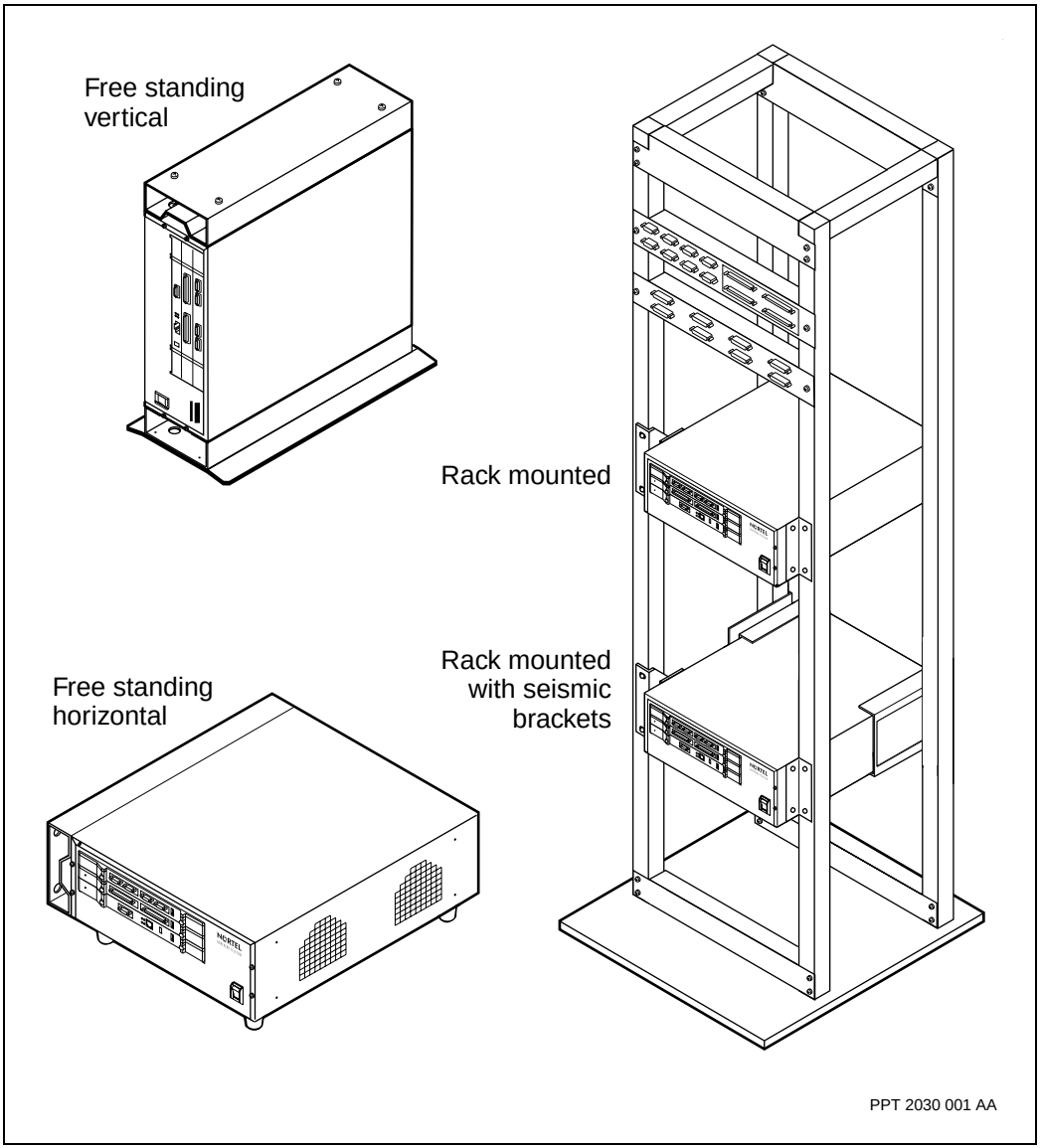

Multiservice Switch 7420 termination panels

You can install 13” termination panels on the rear of a Nortel Networks Multiservice Switch 7420 using the brackets in the termination panel kit (NTHQ09). See the figure “13” termination panels mounted on the rear of a Multiservice Switch 7420” on page 100.

If you install a 3-slot device in a cabinet or rack, you can use 19” termination panels.

Figure 29
13” termination panels mounted on the rear of a Multiservice Switch 7420

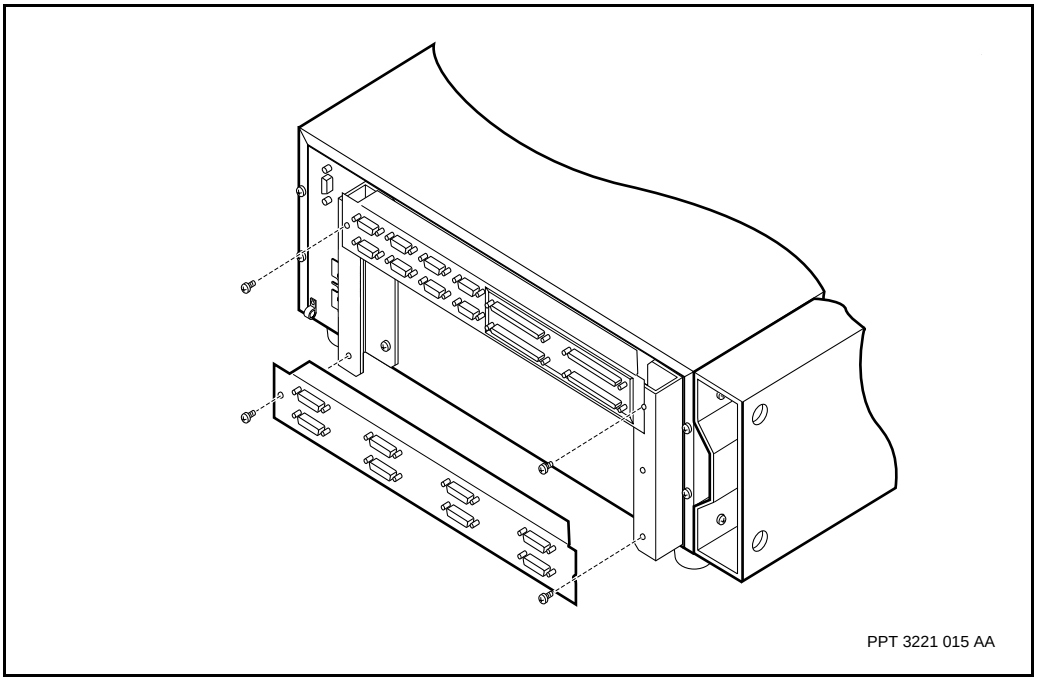

For installation instructions see NN10600-175 *Nortel Networks Multiservice Switch 7400 Hardware Installation, Maintenance, and Upgrade*

Multiservice Switch 7420 environmental requirements

The following table outlines the required environmental tolerances for Nortel Networks Multiservice Switch 7420.

Table 12
Environmental tolerances

Environmental factor	Mode	Specification
Temperature	operating	10 to 40 degrees Celsius (two Multiservice Switch 7420s installed in a cabinet with doors)
		10 to 30 degrees Celsius (one Multiservice Switch 7480 and one Multiservice Switch 7420 installed in a cabinet with doors)
		10 to 35 degrees Celsius (one Multiservice Switch 7480 and one Multiservice Switch 7420 installed in a cabinet without doors)
	Rate of change	<10 degrees Celsius per hour
	Storage	-40 to +70 degrees Celsius
	Rate of change	<100 degrees Celsius per hour
Relative Humidity	operating	10% to 80% non condensing (5.2 kPa pressure maximum)
	Storage	10% to 80% non condensing (5.2 kPa pressure maximum)
Altitude	operating	61 m (200ft) below sea level to 2000 m (6600 ft) above sea level
Particulate atmosphere		Class 100,000 (Fed. Std. No. 209B)

Thermal engineering

Use the following information to find temperature needs for Nortel Networks Multiservice Switch hardware. Nortel Networks Multiservice Switch 7420s can be installed in desktop or vertical mounts, or placed in an office environment. In this case, standard room temperatures are acceptable.

Note: You should keep temperatures low. Conventional theory suggests that MTBF halves for every 5 degrees Celsius rise in temperature.

Air Inlet temperature:
Maximum 40 degrees Celsius for long term reliability

Maximum 55 degrees Celsius for short term functionality (as defined in Telcordia GR-63-CORE, Issue 2 April 2002, and IEC 60068-2) and no more than a total of 96 hours for not more than 15 days in a year

Air outlet temperature:
Maximum 60 degrees Celsius for long term reliability

Maximum 75 degrees Celsius for short term functionality

Multiservice Switch 7420 ventilation and access clearances

Total heat dissipation of a fully populated Nortel Networks Multiservice Switch 7420 is approximately 200 W.

Desktop mounted (placed on a table) and vertically- mounted Multiservice Switch 7420s need the following clearances:

- Top: 5 cm (2 in.)
- Front and sides: 2.5 cm (1 in.)
- Rear: 5 cm (2 in.)

A rack-mounted Multiservice Switch 7420 needs 5-cm (2-in.) clearance on all sides. The maximum depth of the rack-mounting bracket must not exceed 20 cm (8 in.).

Noise levels

The noise level for Nortel Networks Multiservice Switch 7420 is within the limits specified in the Telcordia GR-63-CORE, Issue 2 April 2002, and the ETSI EN 300 753 standard.

The specific measurement for a front-facing device in an open frame with no cover or door is 44 dBA.

Multiservice Switch 7420 dc power source requirements

Nortel Networks Multiservice Switch 7420s have an integrated 300W power supply. The terminal block for the -48 V dc power input is located on the rear panel of the shelf.

To maintain an IEC 950 safety classification, you must protect the power feeds to a dc power supply with external circuit breakers or fuses. Doing so is critical to the safe operation of Multiservice Switch equipment. In -48 V dc installations (typically North American), power feeds into the system require a 60 V dc rated circuit breaker or fuse. In -60 V dc installations (typically European), power feeds into the system require an 80 V dc rated circuit breaker or fuse. In all cases the circuit breaker or fuse must be rated for 10 A dc and have appropriate regulatory approvals.

The power source must be connected to a reliably grounded dc source obtained from an isolation transformer. The dc power source must be within the range of -39 to -72 V dc and capable of providing 300 W per unit, rated at 8 A dc for -41 V dc, and 4 A dc for -72 V dc.

Multiservice Switch 7420 dc power input and wiring requirements

You must supply your own 12 AWG or 14 AWG dc power wiring. Wiring must be

- approved for use in the country of installation
- rated for 10 A dc
- protected with a 10 A circuit breaker or fuse

The nominal input voltage can be -48/-60 V with an input operational range of -39 to -72 V. The maximum output power for each dc supply is 300 W.

Input voltage under minimum battery operating conditions must supply a minimum of -36.0 V to the power supply. For example, if the minimum battery specification for your site is -42 V, then the voltage can drop only 6.0 V. The maximum dc wire length for a voltage drop of 1 V using 14 AWG wire is 12.2 m (39 ft) and for 12 AWG wire is 19.6 m (62 ft).

> ***Note:*** A length of 12.2 m is the distance from the power source to the unit. Total loop length (battery and battery return) is double this length.

The dc power wiring is connected to a two-position, barrier-type terminal strip on the rear of the power supply. The strip has a protective plastic cover.

North American installations must use plain crimp ring lugs (insulated) with a #8 stud size and either a 12 AWG or 14 AWG wire to connect to the power supply terminal strip. European installations must use plain double crimp ring lugs (insulated) approved for European requirements with a #8 stud size and either a 12 AWG or 14 AWG wire. The screws are 164-32 (#8).

> ***Note:*** Ring lugs must be insulated to prevent accidental electric shock.

You must relieve strain on the wire connected to the terminal strip. To relieve any strain, use the P-clip beneath the terminal strip on the rear housing of the device. You must replace the protective cover of the strip after you finish wiring the device.

Multiservice Switch 7420 grounding requirements

Nortel Networks Multiservice Switch equipment is grounded to protect both personnel and equipment.

Nortel Networks Multiservice Switch 7420s contain a separate ground stud located on the rear housing. Processors are grounded through the backplane connectors. 13” termination panels mounted on the rear of the device are grounded through the mounting hardware.

The shelf assembly contains an electrostatic discharge (ESD) jack. You should plug the antistatic wrist strap into the ESD jack and wear the strap whenever you handle processor cards or other hardware that is sensitive to electrostatic discharge.

For further information on grounding, see NN10600-175 *Nortel Networks Multiservice Switch 7400 Hardware Installation, Maintenance, and Upgrade*.

Multiservice Switch 7420 cabling requirements

If you have a fully-configured device with 13” rear-mounted termination panels, you will get the best cable routing between the lower cable organizer and the cable-support guide if

- cable diameters do not exceed 0.8 cm (5/16 inch)
- cable flexibility allows for a bend radius of 2.5 cm (1 inch)

For more information see “Cables” on page 89

Compliance to electrical and safety standards

WARNING
Damage to equipment by electromagnetic interference
To meet electromagnetic interference (EMI) regulatory requirements and thermal specifications, each empty slot must be filled with a blank processor card (NTBP23).

Nortel Networks Multiservice Switch equipment complies with North American and international regulatory safety requirements.

Multiservice Switch 7420 standards compliances

Nortel Networks Multiservice Switch 7420s comply with the following standards (sorted alphabetically):

- CSA C22.2 No. 60950, 3rd edition - Safety of Information Technology Equipment
- EN 60950, 2000 - Safety of Information Technology Equipment, including Electrical Business Equipment
- European Norm EN60950 (VDE)
- ETSI EN 300 019-2-1 - Equipment Engineering; Environmental Conditions & Environmental Tests for Telecommunications Equipment Part 1-2: Classification of Environmental Conditions: Storage
- ETSI EN 300 019-2-2 - Equipment Engineering; Environmental Conditions & Environmental Tests for Telecommunications Equipment Part 1-2: Classification of Environmental Conditions: Transportation

- ETSI EN 300 019-2-3 - Equipment Engineering; Environmental Conditions & Environmental Tests for Telecommunications Equipment Part 1-2: Classification of Environmental Conditions: Stationary Use at Weather-Protected Locations
- ETSI - EN 300 386: 2001 - Electromagnetic Compatibility and Radio Spectrum Matters; Telecommunication Network Equipment; Electro-Magnetic Compatibility Requirements - Telecommunication Equipment in Telecommunication Centres
- ETSI - EN 300 132-2: 1996 - Equipment Engineering (EE); Power Supply Interface at the Input to Telecommunications Equipment Interface - Part 2: Interface Operated by Direct Current
- ETSI - EN 300 253 V2.1.0 2002 - Lightning Protection Earthing and Grounding
- ETSI EN 300 753 - Equipment Engineering: Acoustic Noise Emitted by Telecommunications Equipment
- EN 55022, class B: 1998 (Emissions) - Limits & Methods of Measurement of Radio Disturbance Characteristics of Information Technology Equipment
- EN 55024: 1998 (Immunity) - Electromagnetic Compatibility- Immunity of Information Technology Equipment (ITE)
- FCC Part 15, class B- Code of Federal Regulations Title 47 - Telecommunications Part 15 - Radio Frequency Devices.
- GR-63-CORE, Issue 2, April 2002- Network Equipment Building Systems - Physical Protection
- GR-1089-CORE, Issue 3 October 2002 with Revision 1, February 1999 (Section 2-3, 3.2.5, 4-9) - Electro-Magnetic Compatibility and Electrical Safety - Generic Criteria for Network Telecommunications Equipment.
- IEC 60950, 3rd edition - Safety of Information Technology Equipment, including Electrical Business Equipment.
- UL 60950, 3rd edition - Safety of Information Technology Equipment

Chapter 5
Multiservice Switch 7440

See the following sections for information about Nortel Networks Multiservice Switch 7440:

- “Multiservice Switch 7440 shelf assembly” (page 108)
- “Multiservice Switch 7440 hardware configurations” (page 110)
- “Multiservice Switch 7440 termination panels” (page 111)
- “Multiservice Switch 7440 environmental requirements” (page 116)
- “Multiservice Switch 7440 ventilation and access clearances” (page 117)
- “Multiservice Switch 7440 processor card and power requirements” (page 119)
- “Multiservice Switch 7440 power supply locks” (page 119)
- “Multiservice Switch 7440 ac power source requirements” (page 119)
- “Multiservice Switch 7440 ac power input requirements” (page 120)
- “Multiservice Switch 7440 ac power cords” (page 121)
- “Multiservice Switch 7440 dc power source requirements” (page 122)
- “Multiservice Switch 7440 dc power input and wiring requirements” (page 122)
- “Multiservice Switch 7440 grounding requirements” (page 123)
- “Multiservice Switch 7440 cabling requirements” (page 124)
- “Multiservice Switch 7440 alarms” (page 125)

- “Compliance to electrical and safety standards” (page 126)
- “Multiservice Switch 7440 standards compliances” (page 126)

Multiservice Switch 7440 shelf assembly

Nortel Networks Multiservice Switch 7440 is available in ac or dc versions. Both versions have replaceable power supplies.

Multiservice Switch cooling units draws air through the base and front louvre. The unit expels the air at the top of the back louvre. The cooling unit is replaceable and consists of four fans fastened to a tray.

Figure 30
Multiservice Switch 7440 shelf assembly

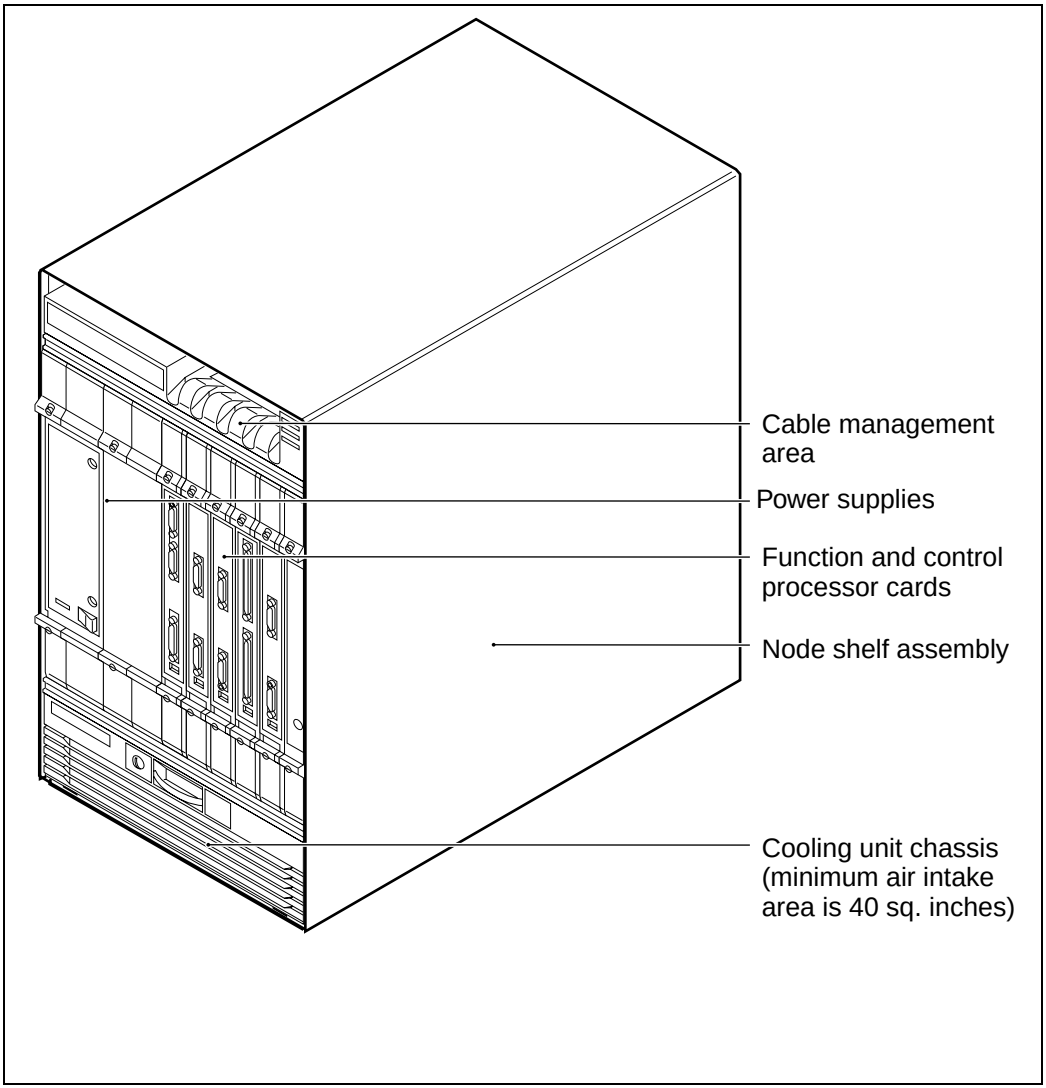

Multiservice Switch 7440 dimensions and weights

This table summarizes the approximate dimensions and weights of the hardware you may be handling.

Table 13
Multiservice Switch 7440 dimensions and weights

Equipment	Outside dimensions (height x width x depth)	Weight
Fully-configured, shelf assembly, cooling unit, air filter assembly, cable management unit, 2 power supplies, 1 CP, 4 FPs, and 4 termination panels (excluding cables)	44.5 cm x 26.7 cm x 55.9 cm (17.5 in x 10.5 in x 22.0 in)	37.2 kg (81.9 lb)
Fully-configured, shelf assembly, cooling unit, air filter assembly, cable management unit, 2 power supplies, 1 CP, 4 FPs, 4 termination panels (excluding cables), 1 front cover, 1 rear cover, and 4 feet	47.0 cm x 26.7 cm x 57.2 cm (18.5 in x 10.5 in x 22.5 in)	38.8 kg (85.4 lb)
Empty shelf assembly	44.5 cm x 26.7 cm x 55.9 cm (17.5 in x 10.5 in x 22.0 in)	15.1 kg (33.3 lb)
Fan tray assembly	5.1 cm x 25.7 cm x 38.1 cm (2.0 in x 10.1 in x 15 in)	3.0 kg (6.5 lb)
Air filter assembly	1.3 cm x 25.7 cm x 38.1 cm (0.5 in x 10.1 in x 15.0 in)	0.1 kg (0.3 lb)
Power supply (PS)	30.5 cm x 5.3 cm x 43.2 cm (12 in x 2.1 in x 17.0 in)	4.3 kg (9.5 lb)
Power supply (blank)	30.5 cm x 5.3 cm x 35.8 cm (12.0 in x 2.1 in x 14.1 in)	0.8 kg (1.8 lb)

Multiservice Switch 7440 hardware configurations

You can mount a Nortel Networks Multiservice Switch 7440 on the floor or in a rack or cabinet. Floor-mounted equipment sits on four rubber feet, required for proper ventilation. Press-fit covers are available for floor-mounted versions.

To mount a Multiservice Switch 7440 in a standard 19-inch rack or cabinet, you must use brackets (available from Nortel Networks). In the United States, if dc-powered equipment is rack-mounted, the racks must have conduit entries, knock-outs, or glands.

See the section “Multiservice Switch 7440 termination panels” (page 111) for more information about hardware configurations.

Multiservice Switch 7440 termination panels

Nortel Networks Multiservice Switch 7440 support both 13” and 19” termination panels. 13” termination panels attaches to the rear of a Multiservice Switch 7440. Standard 19-inch racks and cabinets hold 19” termination panels.

Some of the possible hardware configurations for Multiservice Switch 7440 include:

- “Floor-mounted Multiservice Switch 7440 with 13” rear-mounted termination panels” (page 112)
- “Rack-mounted Multiservice Switch 7440 with 13” rear-mounted termination panels” (page 113)
- “Rack-mounted Multiservice Switch 7440 with 19” rack-mounted termination panels” (page 114)
- “Multiservice Switch 7440 termination panels mounted in a separate rack” (page 115)

Figure 31
Floor-mounted Multiservice Switch 7440 with 13” rear-mounted termination panels

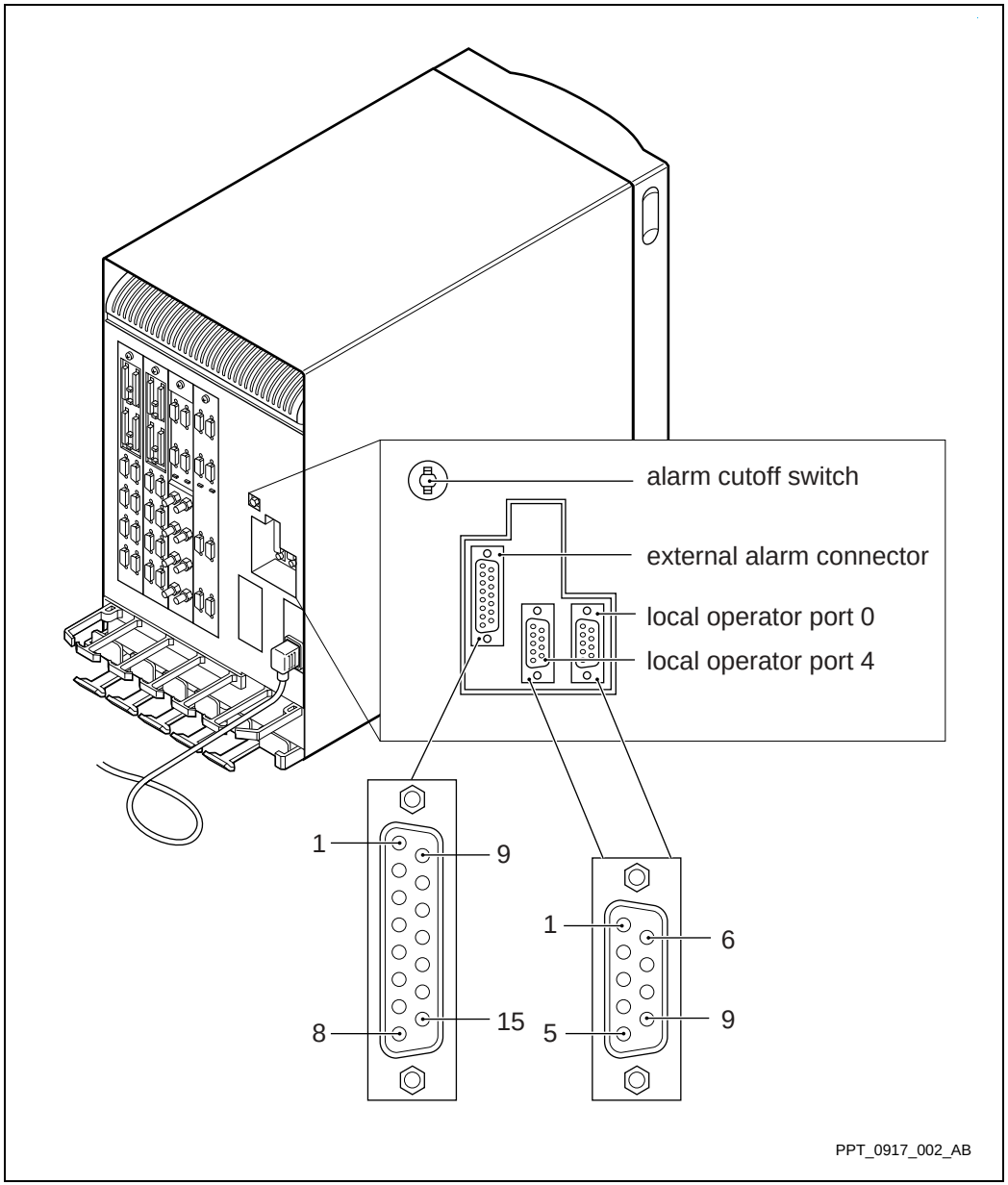

Figure 32
Rack-mounted Multiservice Switch 7440 with 13” rear-mounted termination panels

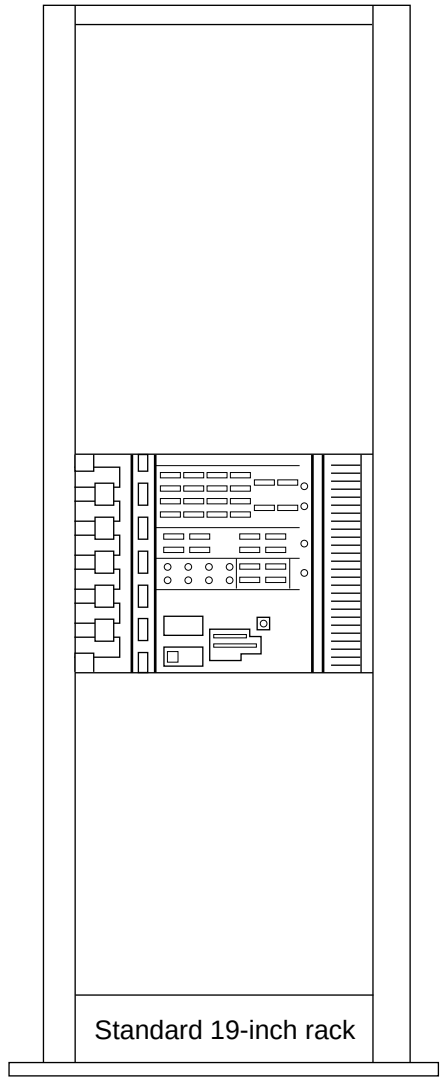

PPT 0905 001 AB

Figure 33
Rack-mounted Multiservice Switch 7440 with 19” rack-mounted termination panels

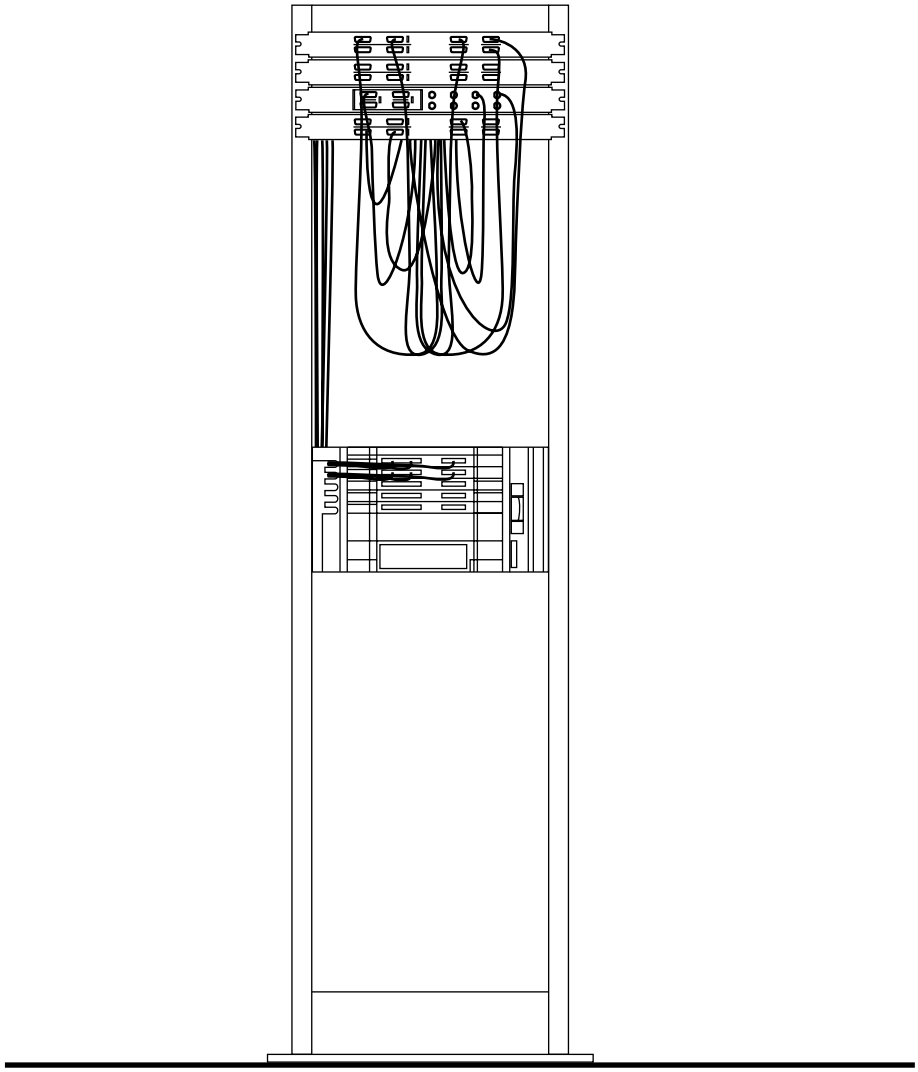

PPT 2121 001 AA

Figure 34
Multiservice Switch 7440 termination panels mounted in a separate rack

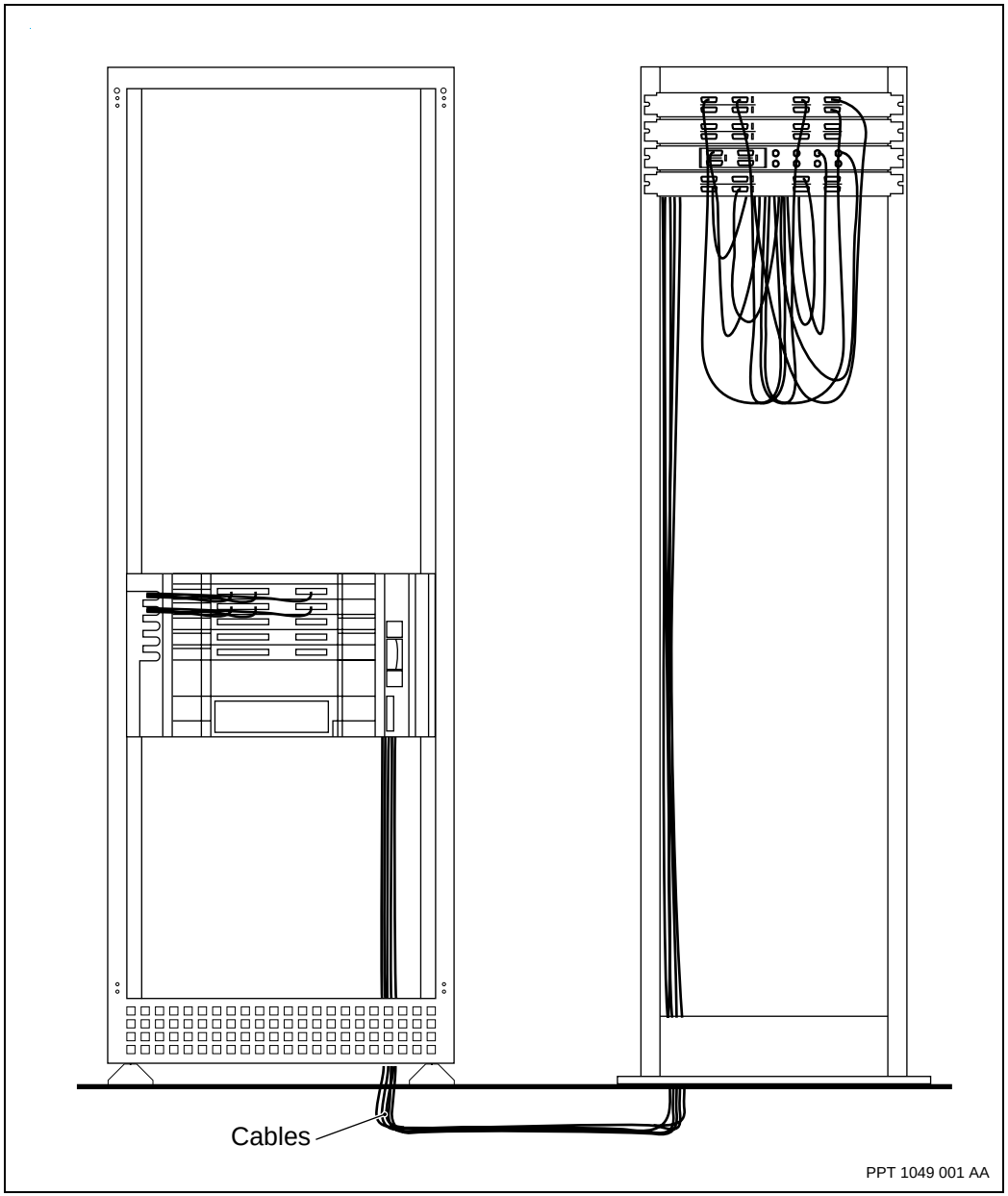

Multiservice Switch 7440 environmental requirements

WARNING
Damage to equipment by electromagnetic interference
To meet EMI regulatory requirements and thermal specifications, all empty slots must be filled with a blank processor card (NTBP23). Additionally, each empty power supply bay requires a power supply blank to meet both EMI and thermal specifications.

The recommended environmental conditions for Nortel Networks Multiservice Switch equipment are given in this table.

Table 14
Environmental requirements

Environmental factor	Mode	Specification
Temperature	Operating	10 to 40 degrees Celsius (one Multiservice Switch 7480, or one Multiservice Switch 7440 installed in a cabinet with doors)
		10 to 30 degrees Celsius (two Multiservice Switch 7480s or one Multiservice Switch 7480 and one Multiservice Switch 7440 installed in a cabinet with doors)
		10 to 35 degrees Celsius (two Multiservice Switch 7480s, or one Multiservice Switch 7480 and one Multiservice Switch 7440 installed in a cabinet without doors)
	Rate of Change	<10 degrees Celsius per hour
	Storage	-40 to +70 degrees Celsius
	Rate of Change	<100 degrees Celsius per hour
Relative Humidity	Operating	10% to 80% non-condensing (5.2 kPa pressure maximum)
	Storage	10% to 80% non-condensing (5.2 kPa pressure maximum)
(Sheet 1 of 2)		

Table 14 (continued)
Environmental requirements

Environmental factor	Mode	Specification
Altitude	Operating	61 m (200 ft) below sea level to 2000 m (6600 ft) above sea level
Particulate atmosphere		Class 100,000 (Fed. Std. No. 209B)
(Sheet 2 of 2)		

Thermal engineering

Use the following information to find environmental temperature requirements for Nortel Networks Multiservice Switch equipment.

> ***Note:*** You should keep temperatures low. Conventional theory suggests that MTBF halves for every 5 degrees Celsius rise in temperature.

Air Inlet temperature:
Maximum 40 degrees Celsius for long term reliability
Maximum 55 degrees Celsius for short term functionality (as defined in Telcordia GR-63-CORE (Issue 2 April 2002), no more than a total of 96 hours for not more than 15 days in a year)

Air outlet temperature:
Maximum 60 degrees Celsius for long term reliability
Maximum 75 degrees Celsius for short term functionality

Multiservice Switch 7440 ventilation and access clearances

A fully-configured Nortel Networks Multiservice Switch 7440 generates 530 W and requires specific clearances for ventilation and access. Failure to satisfy these conditions interferes with the unit's cooling system air flow and can damage equipment

Figure 35
Multiservice Switch 7440 clearances

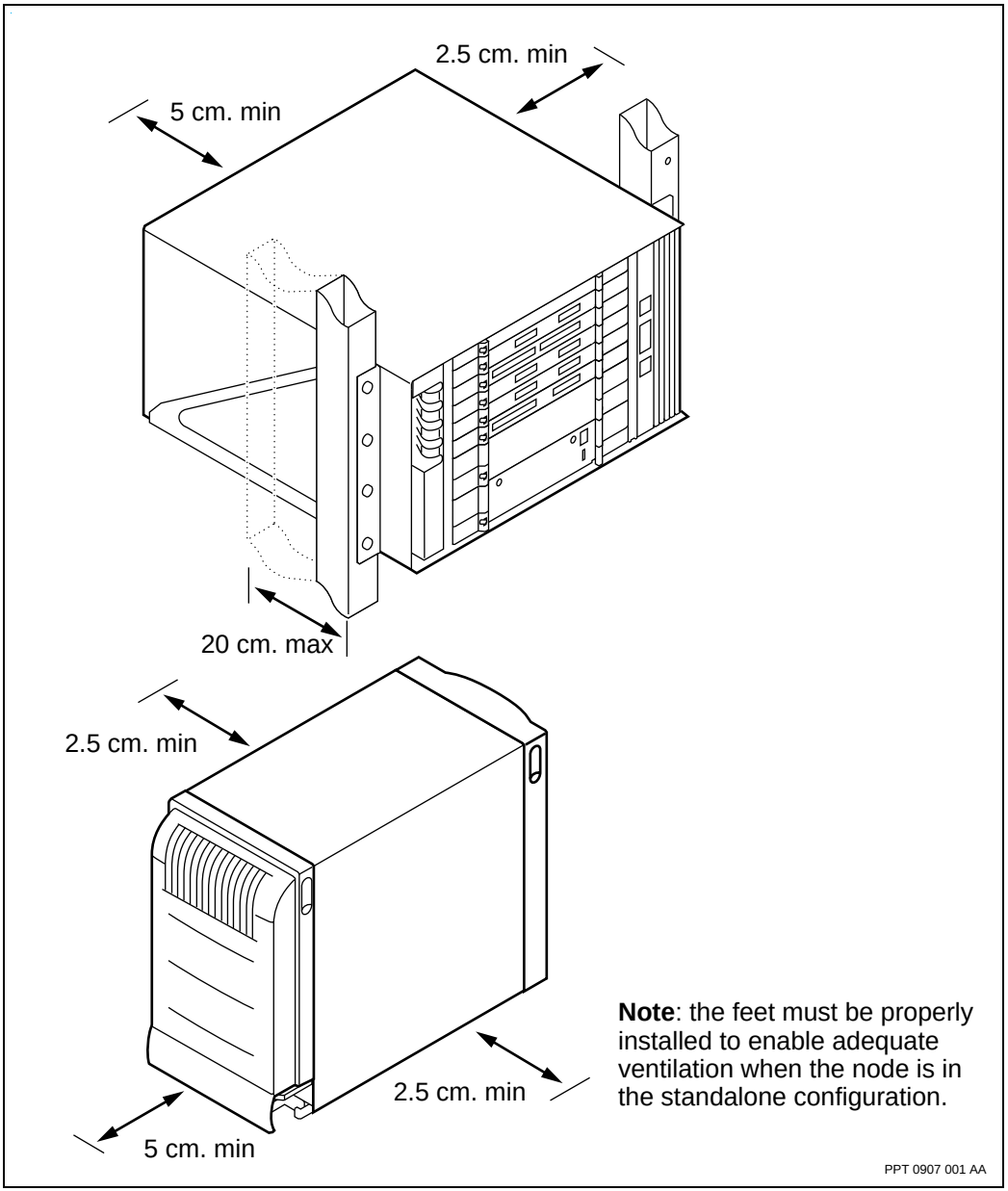

Noise levels

The noise level for a Nortel Networks Multiservice Switch 7440 is within the limits specified in the Telcordia GR-63-CORE standard, Issue 2 April 2002.

The specific measurement for a front-facing device in an open frame with no cover or door is 57.37 dBA.

Multiservice Switch 7440 processor card and power requirements

The following table lists five configurations that meet the minimum processor card requirements for Nortel Networks Multiservice Switch 7440. This table also identifies whether the configuration requires you to use power supply models NTEP26CA (ac) or NTEP27CA (dc).

Table 15
Multiservice Switch 7440 processor card and power requirements

Configuration	CA power supply
CP in slot 0, plus one FP	Required
CP in slot 0, plus two FPs	Optional
CP in slots 0 and 4, plus one FP	Optional

Multiservice Switch 7440 power supply locks

Nortel Networks Multiservice Switch 7440 power supplies have locks on the faceplate to protect personnel.

Multiservice Switch 7440 ac power source requirements

WARNING
Damage to equipment by electromagnetic interference
Each empty power supply bay must be filled with power supply blank in order to meet EMI regulatory requirements and thermal specifications.

For ac installations, the power supply must be within 3 m (10 ft) of an individually-fused wall outlet. The wall outlet must accept a 3-pin plug.

Each ac power supply must come from a separate disconnect device at the ac distribution panel. Each ac outlet must be wired separately to the ac distribution panel. The protection circuit current rating must be:

- 15 A (120 V ac) for North America
- 6.3 A (240 V ac) for Europe

Ac power supplies are self-adjusting to the ac primary voltage input in the ranges of:

- 100 to 120 V ac for North America
- 200 to 240 V ac for Europe

Multiservice Switch 7440 ac power input requirements

For ac installations, the power source can be either 120 or 220 V ac, single-phase.

Table 16
Multiservice Switch 7440 ac power requirements

Parameter	220 V ac Input	120 V ac Input
Nominal input voltage	200 to 240 V ac with input operational range of 180 to 250 V ac	100 to 120 V ac with input operational range of 92 to 132 V ac
Current	3 A max	7 A max
Frequency	47 to 63 Hz	47 to 63 Hz
Output power	438 W	438 W

To prevent interruption of service, the power for each supply of a fully equipped shelf should be supplied from an uninterruptable power supply rated at 800 W. This rating accounts for inefficiencies in the uninterruptable supply itself, and ensures that the power requirements are met under all circumstances.

Multiservice Switch 7440 ac power cords

Power cords are not shipped with Nortel Networks Multiservice Switch ac shelves but you can order them from Nortel Networks, or use your own. Nortel Networks ac power cords are regulatory-approved for use with Multiservice Switch equipment, and are 3 m (9.8 ft) long. Do not use extension cords.

Power cords should meet safety standards for the country of installation and should be marked with the appropriate certification marks. (For details on common certification marks, approved organizations, and harmonization markings, see the *Power Cord Selection Guide* delivered with your Multiservice Switch equipment.)

If you are installing in North America, see “North American power cord specifications” (page 121).

If you are installing in Europe, see “European power cord specifications” (page 121).

North American power cord specifications

Your power cords must meet these specifications:

- Plug: grounding plug (North American) NEMA 5-15P
- Rating: 13A, 125 V ac
- Conductor size: type SJT, 16 AWG (1.0 mm^2)
- Receptacle/Termination: grounding receptacle IEC 320/CEE22 Type 1B

European power cord specifications

Your power cords must meet these specifications:

- Plug: continental European set plug
- Rating: 10A, 250 V ac
- Conductor size: HAR flexible cord, 16 AWG (1.0 mm^2)
- Receptacle/Termination: grounding receptacle IEC 320/CEE22 type 1B

Multiservice Switch 7440 dc power source requirements

WARNING
Damage to equipment by electromagnetic interference
Each empty power supply bay must be filled with a power supply blank in order to meet EMI regulatory requirements and thermal specifications.

To maintain an IEC 950 safety classification, you must protect the power feeds to a dc power supply with external circuit breakers or fuses. Doing so is critical to the safe operation of Nortel Networks Multiservice Switch equipment. In -48 V dc installations (typically North American), power feeds into the system require a 60 V dc rated circuit breaker or fuse. In -60 V dc installations (typically European), power feeds into the system require an 80 V dc rated circuit breaker or fuse. In all cases the circuit breaker or fuse must be rated for 20 A dc and have appropriate regulatory approvals.

The power source must be connected to a reliably grounded dc source obtained from an isolation transformer. The dc power source must be within the range of -39 to -72 V dc and capable of providing 625 W per unit, rated at 16 A dc for -39 V dc, and 9 A dc for -72 V dc.

Multiservice Switch 7440 dc power input and wiring requirements

You must supply your own 10 AWG dc power wiring. Wiring must be

- approved for use in the country of installation
- rated for 20 A dc
- protected with a 20 A circuit breaker or fuse

The nominal input voltage can be -48/-60 V with an input operational range of -39 to -72 V. The maximum output power for each dc supply is 625 W.

Input voltage under minimum battery operating conditions must supply a minimum of -39.5 V to the power supply. For example, if the minimum battery specification for your site is -42 V, then the voltage can drop only 2.5 V. The maximum dc wire length for a voltage drop of 1 V using 10 AWG wire is 10 m (32 ft).

> ***Note:*** A length of 10 m is the distance from the power source to the unit. Total loop length (battery and battery return) is double this length.

The dc power wiring is connected to a two-position, barrier-type terminal strip on the rear of the power supply. The strip has a protective plastic cover.

North American installations must use #8, 10 AWG, 90-degree crimp ring lugs to connect to the power supply terminal strip. European installations must use #8, 10 AWG, 90-degree double crimp ring lugs approved for European requirements. The screws are 164-32 (#8).

The following text appears in German to comply with VDE requirements.
Das Geraet muss mindestens mit einer 6 mm^2 starken Leitung angeschlossen werden (Strombelastung 20 Amp dc). Die Leitung muss mit einer Sicherung (CB) abgesichert werden. Die Drahtlaenge darf 10 Meter nicht uebersteigen (fuer hin- und rueckfuehrung). Die Gleichspannung wird an eine zweipolige Klemme angeschlossen, die sich unter einer Plastikabdeckung befindet. Es muessen Schrauboese verwendet werden, die mindestens 6 mm Drahtdurchmesser aufnehmen koennen.

You must relieve strain on the wire connected to the terminal strip. To relieve any strain, use the clamp beneath the terminal strip on the rear housing of the device. You must replace the protective cover on the strip after you finish wiring the device.

Multiservice Switch 7440 grounding requirements

Nortel Networks Multiservice Switch equipment is grounded to protect both personnel and equipment.

The grounding pin of the power cord’s ac plug provides the ground for a Nortel Networks Multiservice Switch 7440.

For dc grounding, the equipment contains a separate ground stud located near the top of the rear housing.

The shelf assembly contains an electrostatic discharge (ESD) jack. Plug the antistatic wrist strap into the ESD jack and wear the strap whenever you handle processor cards or other hardware that is sensitive to electrostatic discharge.

For further information see the section on grounding in NN10600-175 *Nortel Networks Multiservice Switch 7400 Hardware Installation, Maintenance, and Upgrade*.

Multiservice Switch 7440 cabling requirements

If you have a fully-configured shelf with 13” rear-mounted termination panels, you will get the best cable routing between the lower cable organizer and the cable-support guide if

- cable diameters do not exceed 0.8 cm (5/16 in.)
- cable flexibility allows for a bend radius of 2.5 cm (1 in.)

If you will install a rear cover, the maximum height of the connector body and cable-bend radius is 7.6 cm (3 in.). See the figure “Cable recommendation for Multiservice Switch 7440” (page 125).

There are three D-type connectors on the back of a Nortel Networks Multiservice Switch 7440.

- DB-9 for operator port 0
- DB-9 for operator port 4
- DB-15 for an external alarm connection

Any connections made to the rear of a device must be made with shielded cables to meet electromagnetic interference (EMI) regulatory requirements.

Figure 36
Cable recommendation for Multiservice Switch 7440

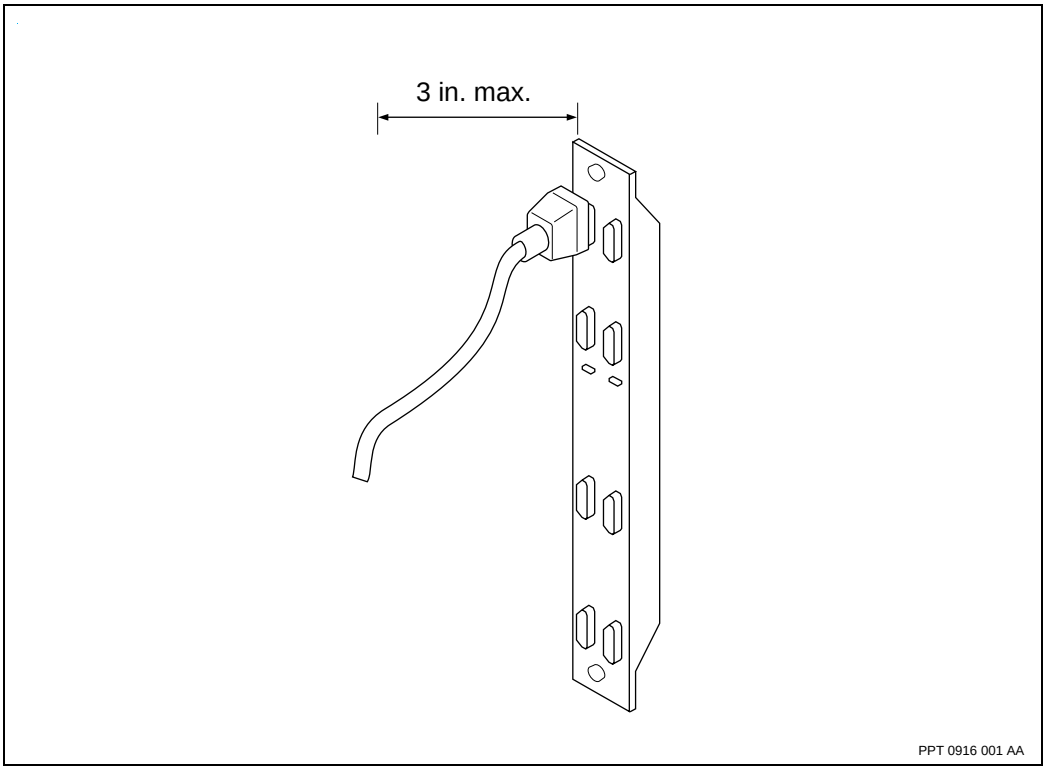

Multiservice Switch 7440 alarms

Hardware alarms raised by Nortel Networks Multiservice Switch 7440s are displayed by LEDs located on the front. Red indicates a major alarm has been generated; yellow indicates a minor alarm. A green LED indicates that there is power to the shelf.

The status of most of the hardware equipment on a Multiservice Switch 7400 can also be checked in software. NN10600-520 *Nortel Networks Multiservice Switch 7400/15000/20000 Fault and Performance Management: Troubleshooting* describes the procedures for verifying hardware status.

A major alarm would be activated if a FP or control processor (CP) fails.

A minor alarm is activated if one of the following occurs:

- a power supply fails
- a fan in the cooling unit fails
- the cooling unit becomes disconnected from the shelf assembly

Multiservice Switch 7440s do not generate an alarm when the power supply is removed.

If your installation has external alarms, the equipment also generates an external alarm.

For information on alarm cabling and external alarm installation see “Alarm hardware installation” in NN10600-175 *Nortel Networks Multiservice Switch 7400 Hardware Installation, Maintenance, and Upgrade*.

External alarms

Refer to “External alarms” (page 180)

Compliance to electrical and safety standards

WARNING

Damage to equipment by electromagnetic interference

To meet electromagnetic interference (EMI) regulatory requirements and thermal specifications, all empty slots must be filled with a blank processor card (NTBP23). Additionally, each empty power supply bay requires a power supply blank to meet both EMI and thermal specifications.

Nortel Networks Multiservice Switch equipment comply with North American and international regulatory safety requirements.

Multiservice Switch 7440 standards compliances

Nortel Networks Multiservice Switch 7440s comply with the following standards (sorted alphabetically):

- AS/NZ 3548

- CISPR 22 Class A
- EN 55022 Class A
- EN 50082-1
- European Norm EN60950 (VDE)
- FCC Part 68
- GR-63-CORE, Issue 2, April 2002 NEBS
- GR-78-CORE
- GR-1089-CORE, Issue 3, October 2002
- ICES-003 issue
- Industry Canada CS-03
- Nortel Networks corporate safety standards 9001
- CSA certified per CSA C22.2 No. 950-M89 Information Technology Equipment
- FCC Part 15B Class A system
- UL Listed. UL1950 Data processing equipment
- VCCI Class 1

The dc power supply comply with the appropriate sections of these documents:

- In North America, UL and CSA specifications apply to an absolute minimum input voltage of -60 V dc, wherein battery return (BR) and Logic Return (LR) are properly grounded. The BR and LR are grounded at the system ground window according to Nortel Networks corporate grounding standard CS 1422.
- In the international market, specifications apply to an absolute maximum input voltage of -72 V dc, wherein BR and LR are properly grounded. The BR and LR are grounded at the system ground window according to Nortel Networks corporate grounding standard CS 4122.
- UL 1950; March, 1989; Safety of Information Technology Equipment
- CSA C22.2 950; October, 1989; Information Technology Equipment

- EN 60950; 1988; Information Technology Equipment

Chapter 6
Multiservice Switch 7460

See the following sections for information about Nortel Networks Multiservice Switch 7460:

- “Multiservice Switch 7460 shelf assembly” (page 130)
- “Multiservice Switch 7460 hardware configurations” (page 133)
- “Multiservice Switch 7460 termination panels” (page 135)
- “Multiservice Switch 7460 environmental requirements” (page 138)
- “Multiservice Switch 7460 ventilation and access clearances” (page 139)
- “Multiservice Switch 7460 dc power source requirements” (page 139)
- “Multiservice Switch 7460 dc power input and wiring requirements” (page 140)
- “Multiservice Switch 7460 grounding requirements” (page 142)
- “Multiservice Switch 7460 alarms” (page 142)
- “Multiservice Switch 7460 standards compliances” (page 146)

Multiservice Switch 7460 shelf assembly

Nortel Networks Multiservice Switch 7460 contains the equipment shown in the figure “Multiservice Switch 7460 shelf assembly with exploded view of associated parts” (page 131). The shelf assembly and all of the plug-in and bolt-on parts are field-replaceable units (FRUs). All part numbers are listed in “Multiservice Switch part numbers” (page 511).

Nortel Networks recommends operating a Multiservice Switch 7460 with a spare control processor (CP) for maximum robustness and redundancy.

For specific dimensions and weights, see “Multiservice Switch 7460 dimensions and weights” (page 131).

Figure 37
Multiservice Switch 7460 shelf assembly with exploded view of associated parts

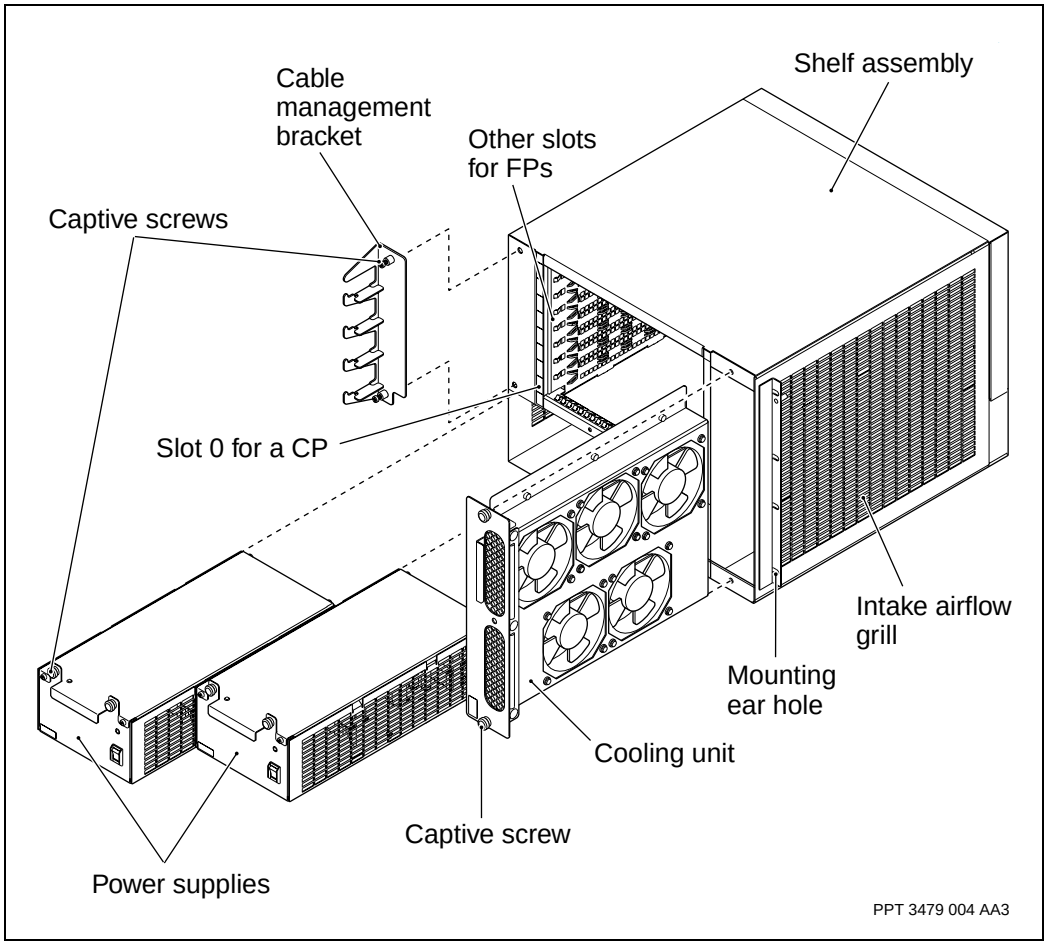

Multiservice Switch 7460 dimensions and weights

"Multiservice Switch 7460 equipment dimensions and weights" (page 132) summarizes the approximate dimensions and weights of the hardware you may be handling.

Table 17
Multiservice Switch 7460 equipment dimensions and weights

Equipment	Outside dimensions (height x width x depth)	Weight
Shelf assembly with cooling unit, cable management bracket, cables (worst case installed weight), 2 power supplies, 2 CPs, 6 FPs	35.56 cm x 47.75 cm x 55.37 cm (14.0 in. x 18.8 in. x 21.8 in.) ***Note:*** Width is 44.70 cm (17.6 in.) inside mounting ears	44.5 kg (98.1 lb)
empty shelf assembly ***Note:*** These dimensions are different from the fully loaded assembly in the depth dimension due to the cable management bracket.	35.56 cm x 47.75 cm x 50.17 cm (14.0 in. x 18.8 in. x 19.7 in.) ***Note:*** Width is 44.70 cm (17.6 in.) inside mounting ears	18.9 kg (41.67 lb)
cable management bracket	24.1 cm x 5.0 cm x 6.35 cm (9.48 in. x 1.96 in. x 2.50 in.)	0.3 kg (0.66 lb)
cooling unit, including air filter	35.56 cm x 7.62 cm x 42.55 cm (14.0 in. x 3.0 in. x 16.75 in)	3.9 kg (8.6 lb)
power supply (dc) ***Note:*** The depth measurement includes the connector on the back.	13.34 cm x 18.42 cm x 42.55 cm (5.25 in. x 7.25 in. x 16.75 in)	5.7 kg (12.57 lb)
power supply filler	13.34 cm x 17.78 cm x 6.99 cm (5.25 in. x 7.0 in. x 2.75 in)	0.36 kg (0.79 lb)

Multiservice Switch 7460 dc shelf assembly

The power source for a Nortel Networks Multiservice Switch 7460 can be dc only.

Multiservice Switch 7460 hardware configurations

Nortel Networks Multiservice Switch hardware provides maximum configuration flexibility. Your installation may include configurations similar to these figures:

- “Multiservice Switch cabinet containing one Multiservice Switch 7460” (page 134)
- “Standard 19-inch rack with four Multiservice Switch 7460s” (page 135)

Figure 38
Multiservice Switch cabinet containing one Multiservice Switch 7460

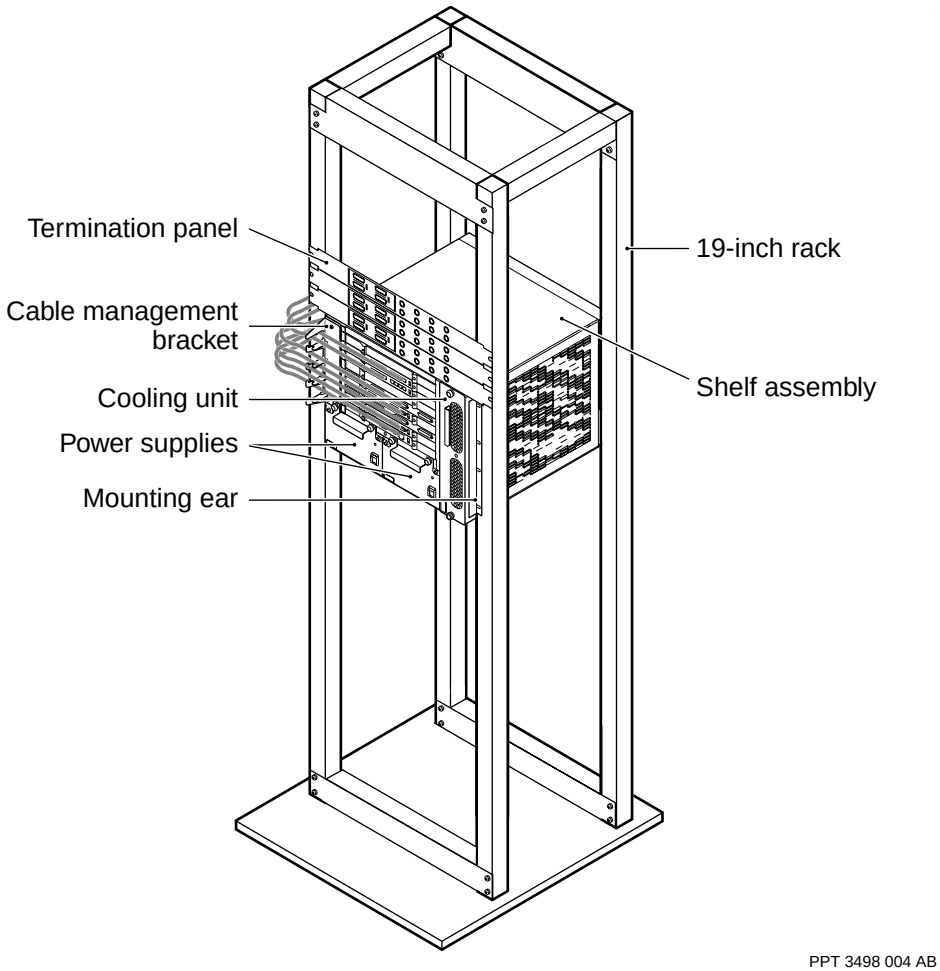

Figure 39
Standard 19-inch rack with four Multiservice Switch 7460s

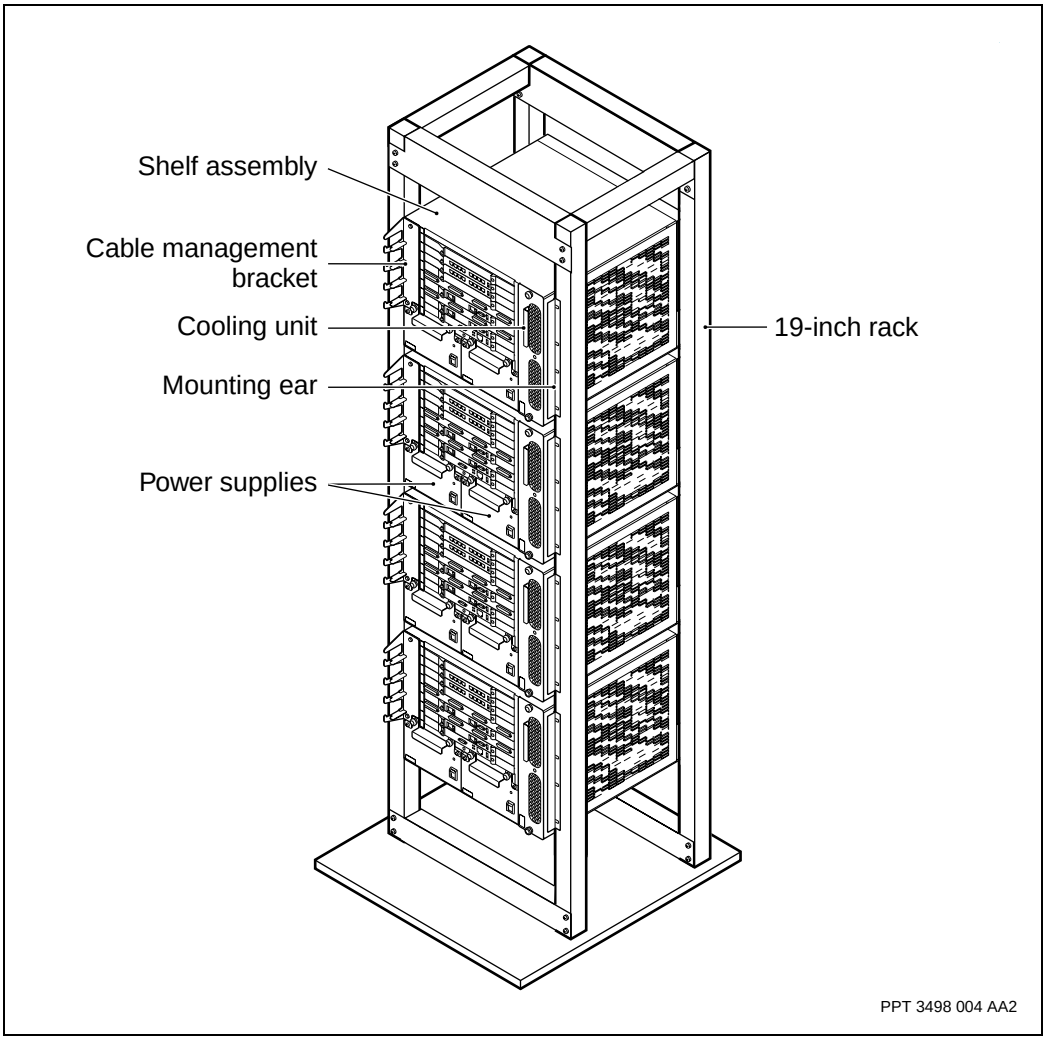

Multiservice Switch 7460 termination panels

Nortel Networks Multiservice Switch 7460 can be installed in a 19-inch wide mounting apparatus, such as a Multiservice Switch cabinet, Multiservice Switch seismic cabinet, or a standard 19-inch wide telecommunications rack. The termination panels of various types of FPs can be installed in the same

19-inch wide mounting apparatus, as space allows. The termination panels that are not 19 inches wide must be mounted elsewhere within the distance imposed by the maximum length of cable between the type of FP and its panel. The types of termination panel and the lengths of their cables are provided in the description of each FP in NN10600-170 *Nortel Networks Multiservice Switch 7400 Hardware Description*.

A cabinet equipped with one device accommodates up to 64, 1-unit-high (1U) termination panels in that cabinet.

If you install a second device in a cabinet, you may need to move your termination panels to a separate cabinet or rack.

If you install termination panels in a separate 19-inch cabinet, leave at least 76 cm (30 in.) of space around the cabinet for maintenance access.

The following figure shows a possible termination panel configuration for Multiservice Switch 7460: “Standard 19-inch rack with termination panels” (page 137).

Figure 40
Standard 19-inch rack with termination panels

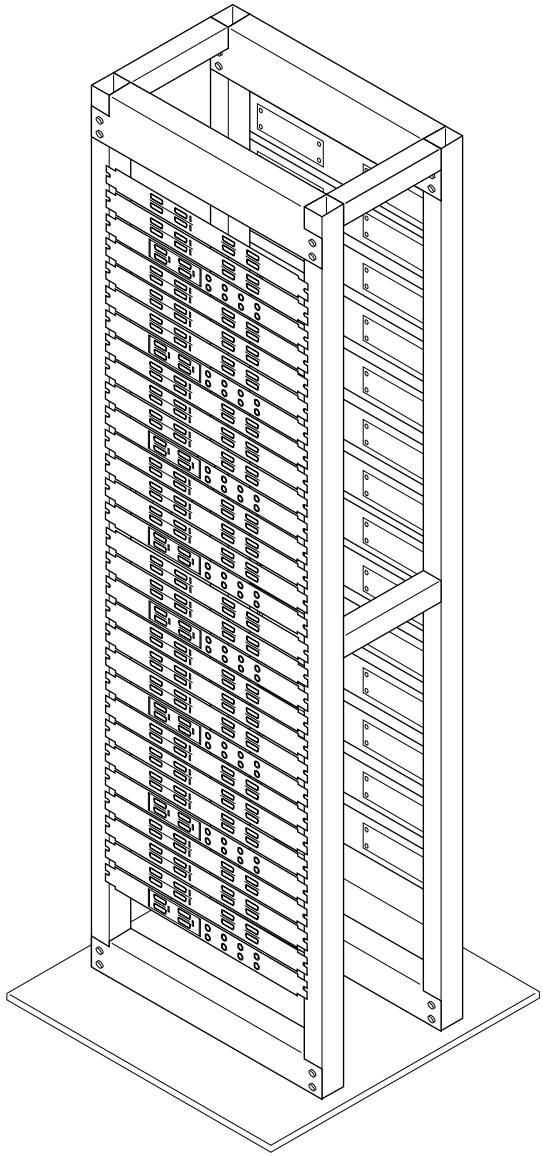

PPT DCP70144

Multiservice Switch 7460 environmental requirements

WARNING
Damage to equipment by electromagnetic interference
To meet EMI regulatory requirements and thermal specifications, all empty slots must be filled with a blank processor card (NTBP23). Additionally, each empty power supply bay requires a power supply blank to meet both EMI and thermal specifications.

The recommended environmental conditions for Nortel Networks Multiservice Switch equipment are given in the table “Environmental requirements for a Multiservice Switch 7460” (page 138).

Table 18
Environmental requirements for a Multiservice Switch 7460

Environmental factor	Mode	Specification
Temperature	Operating	10 to 40 degrees Celsius (50 to 104 degrees Fahrenheit) for one Multiservice Switch 7460 installed in a cabinet without doors
	Storage	-40 to +70 degrees Celsius (-40 to 158 degrees Fahrenheit)
	Rate of Change	<100 degrees Celsius per hour or <212 degrees Fahrenheit per hour
Relative Humidity	Operating	10% to 80% non-condensing (5.2 kPa pressure maximum)
	Storage	10% to 80% non-condensing (5.2 kPa pressure maximum)
Altitude	Operating	61 m (200 ft.) below sea level to 2000 m (6600 ft.) above sea level
Particulate atmosphere		Class 100,000 (Fed. Std. No. 209B)

Multiservice Switch 7460 ventilation and access clearances

When a Nortel Networks Multiservice Switch cabinet has four fully configured Multiservice Switch 7460s installed, the maximum heat dissipation is from a power draw of 3480 W (or a maximum of 870 W per shelf assembly).

The clearance for ventilating each device must be a minimum of 5.0 cm (2 in.) on each side of the shelf assembly. Air is drawn in from the right side and exhausted out the left side. When a device is installed in a Multiservice Switch cabinet or Multiservice Switch seismic cabinet, the distance from each side of the shelf assembly to the side of the cabinet is greater than 5.0 cm (2 in.).

When planning the cable paths from the processor cards, you must ensure that the clusters of cables do not obstruct the exhaust airflow.

The cooling unit can maintain the ambient temperature inside the shelf assembly from four of its five fans. The fifth fan is redundant and operates with the other four. It is not recommended to allow the cooling unit to operate in a diminished capacity beyond three days because loss of a second fan cannot guarantee adequate cooling.

Airflow velocity

A fully functional cooling unit in a Nortel Networks Multiservice Switch 7460 generates 0.95 m/s of airflow. The amount of airflow is reduced to 0.45 m/s (at 20 degrees Celsius or 68 degrees Fahrenheit) when a single fan unit fails.

Multiservice Switch 7460 dc power source requirements

WARNING
Damage to equipment by electromagnetic interference
An empty power supply bay must be filled with a power supply blank in order to meet EMI regulatory requirements and thermal specifications.

To maintain an IEC 950 safety classification, you must protect the power feeds to a dc power supply with external circuit breakers or fuses. Doing so is critical to the safe operation of Nortel Networks Multiservice Switch equipment. In -48 V dc installations (typically North American), power feeds into the system require a 60 V dc rated circuit breaker or fuse. In -60 V dc installations (typically European), power feeds into the system require an 80 V dc rated circuit breaker or fuse. In all cases the circuit breaker or fuse must be rated for 30-Amp dc per unit or 60-Amp dc per device and have appropriate regulatory approvals.

The power source must be connected to a reliably grounded dc source obtained from an isolation transformer. The dc power source must be within the range of -39 to -72 V dc and capable of providing:

- 1000 W per device rated at:
  - 25-Amp dc for -39 V dc
  - 14-Amp dc for -72 V dc
- 2000 W per device rated at:
  - 50-Amp dc for -39 V dc
  - 28-Amp dc for -72 V dc

Based on the processor card configuration that draws the most power (including dual power supplies and a cooling unit) a Multiservice Switch 7460 draws a maximum of 870 W.

Multiservice Switch 7460 dc power input and wiring requirements

You must supply your own dc power cables. Each cable feed must be able to carry 30-Amp dc and must be protected with a 30-Amp circuit breaker or fuse.

The nominal input voltage can be -48/-60 V with an operational range for input power of -40 to -72 V dc. The output power cannot exceed 600 W.

Input voltage under minimum battery operating conditions must supply a minimum of 39.5 V to the power supply. For example, if the minimum battery specification for your site is 42 V, then the voltage can drop only 2.5 V.

The maximum length for different wire gauges for a voltage drop of 1 V are

- No. 10 AWG (5.26 mm^2) for 6.6 m (20 ft.)
- No. 8 AWG (8.36 mm^2) for 10 m (30 ft.)
- No. 6 AWG (13.3 mm^2) for 16.6 m (50 ft.)

These lengths are the maximum distances from the power source. Total loop length (battery and battery return) is double the length.

Dc power cables are connected to a four-position barrier-type terminal strip. The connector is a ring lug No. 10 AWG (or 5.26mm^2) stud size. The nuts are #10-32.

In all cases, the -48/-60 V dc power feeds into the system must be protected with an external circuit breaker or fuse, with appropriate voltage ratings and regulatory approvals. The disconnect device must be external to the cabinet and reside in the same room with the cabinet. It must be at least as fast as the maximum allowable trip times indicated below. A fast-acting protection device can be used since the inrush current into the system is controlled to be less than 25-Amp peak. The protection device must be capable of supporting 23-Amp dc indefinitely. It must have a voltage rating of -48/-60 V dc nominal and a current rating of 30-Amp nominal for each power supply. An AIRPAX 30-Amp circuit breaker from the IEG family with a voltage rating of 80 V dc and with a delay type 52 meets these requirements.

Table 19
Allowable trip times for Multiservice Switch 7460 power feed protection devices

Current (amps)	30	37.5	45	60	120	180	240	300
Maximum trip time (seconds)	-	60	30	10	2	1	0.5	0.1

Multiservice Switch 7460 grounding requirements

Nortel Networks Multiservice Switch 7460 is grounded to protect personnel and equipment. Multiservice Switch 7460 has a separate ground stud located near the bottom of the rear of the shelf assembly. This is to be used to ground the switch to the site's dc ground window.

The shelf assembly houses an electrostatic discharge (ESD) jack. Plug the antistatic wrist strap into the ESD jack and wear the strap whenever you handle any hardware with or without electronic parts, especially processor cards or other hardware that is sensitive to ESD. The location of the ESD jack is shown at the appropriate procedure in NN10600-175 *Nortel Networks Multiservice Switch 7400 Hardware Installation, Maintenance, and Upgrade*

For information on the method of grounding, see the section on grounding in NN10600-175 *Nortel Networks Multiservice Switch 7400 Hardware Installation, Maintenance, and Upgrade*.

Multiservice Switch 7460 alarms

If Nortel Networks Multiservice Switch 7460 is mounted in a Multiservice Switch cabinet or Multiservice Switch seismic cabinet, you can install a door alarm cable or an external alarm cable.

The status of most of the hardware equipment on Multiservice Switch 7460 can be checked in software. NN10600-520 *Nortel Networks Multiservice Switch 7400/15000/20000 Fault and Performance Management: Troubleshooting* describes the procedures for verifying hardware status.

Door alarm

The door alarm cable has an RJ-12 connector at one end and a 9-pin D-sub at the other end. When the door alarm cable is connected between the shelf at the connector labeled Alarm 2 and the door of a cabinet (as described by the installation procedure in NN10600-175 *Nortel Networks Multiservice Switch 7400 Hardware Installation, Maintenance, and Upgrade*), the alarm is triggered when the door is open. The software also generates an alarm to indicate the door is open.

Rack-mounted Alarm panel or Power and Alarm panel

The 19 in. rack-mounted alarm panel kit (NTPS20AA), and power and alarm panel kit (NTPS20BA) that are available for the Multiservice Switch 7460 are intended to be remotely rack-mounted and connected to the rear of the shelf assembly. Shelf-level hardware alarms for Multiservice Switch 7460 are displayed by LEDs on each of these panels. The Power and Alarm panel (NTPS20BA) accommodates a front-facing power connector, as well as the alarm connection and LEDs.

- Red indicates a major alarm has been generated.
- Amber indicates a minor alarm.
- Green indicates that there is power to the shelf and there is no other alarm.

A major alarm would be activated if a function processor (FP) or control processor (CP) fails.

A minor alarm is activated if at least one of the following occurs:

- a power supply fails
- a fan in the cooling unit fails
- the cooling unit becomes disconnected from the shelf assembly

Multiservice Switch 7460s do not generate an alarm if you:

- remove a power supply from the shelf
- toggle the power supply control on the faceplate to the standby position

To reset a minor alarm, correct the fault. After you correct the fault, the minor alarm contact is reset. After you clear a major alarm, you can reset the alarm hardware to clear the alarm.

External alarms

Connecting the external alarm cabling is optional. The procedure is the same for Nortel Networks Multiservice Switch 7440, Multiservice Switch 7460, and Multiservice Switch 7480.

Shielded cables are required for the external alarm connections. For pinouts see the table “Pinout information for alarm connectors” (page 145).

The external alarm cable connects to the cabinet through a D-type, 15-pin connector labeled “Alarm 1”. Multiservice Switch 7460 has dry relay contacts that close when the device generates an alarm. There are three sets of major alarm contacts and three sets of minor alarm contacts. You can use each set to generate alarms at a different location. The figure “Example of a major alarm connection” (page 144) shows an external alarms system that lights a bulb when the shelf generates a major alarm.

Figure 41
Example of a major alarm connection

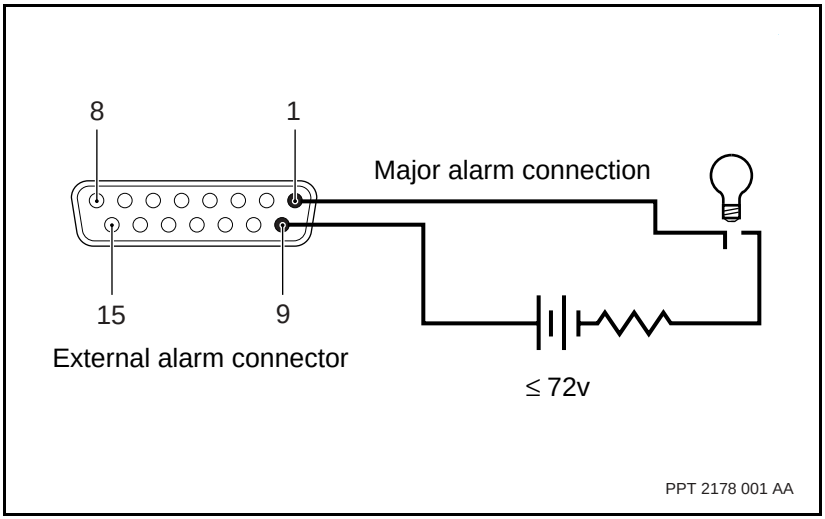

Each set of contacts is rated at 72 V dc, 1-Amp dc. Your alarm system must provide its own power.

You can insert a switch between the alarm cable and your alarm system to allow you to isolate your alarm system from the Multiservice Switch 7460 alarm circuit (relay contacts) during repairs. Remember to set the switch to the ON position after any repair.

For information on alarm cabling and external alarm installation, see “Alarm hardware installation” in NN10600-175 *Nortel Networks Multiservice Switch 7400 Hardware Installation, Maintenance, and Upgrade*.

Pinout information for alarm connectors

This section provides the pinout information for the alarm connectors. The tables are as follows:

- “External alarm (Alarm 1) connector pinouts” (page 145)
- “Pinout of a Multiservice Switch 7460 door alarm (Alarm 2) connector” (page 146)

Table 20
External alarm (Alarm 1) connector pinouts

Pin number	Contact
1	major alarm connection for location 1
2	major alarm connection for location 2
3	major alarm connection for location 3
4	no connection
5	minor alarm connection for location 1
6	minor alarm connection for location 2
7	minor alarm connection for location 3
8	no connection
9	major alarm connection for location 1
10	major alarm connection for location 2
11	major alarm connection for location 3
12	no connection
13	minor alarm connection for location 1
14	minor alarm connection for location 2
15	minor alarm connection for location 3
Note: All relay contacts are normally open.	

Table 21
Pinout of a Multiservice Switch 7460 door alarm (Alarm 2) connector

Pin number	Signal name
1	N/C
2	N/C
3	+5V Fuse
4	ALMCON
5	GND
6	Major Alarm
7	Minor Alarm
8	N/C
9	N/C

Multiservice Switch 7460 standards compliances

Nortel Networks Multiservice Switch 7460 complies with the following regulatory standards:

- AS/NZ 3548
- CSA certified per CSA C22.2 No. 60950 and UL 60950
- EN 55022 (CISPR 22) and EN 300 386-2 Class B
- EN55024 and EN 300 386
- ETS 300-019
- European Norm EN60950 (VDE)
- FCC Part 15B Class A system
- FCC Part 68
- GR-63-CORE, Issue 2, April 2002
- GR-78-CORE
- GR-1089-CORE, Issue 3, October 2003
- ICES-003

- Industry Canada CS-03
- Nortel Networks corporate safety standards 9001
- VCCI Class 1

The dc power supply for Multiservice Switch 7460 complies with the appropriate sections of these documents:

- In North America, UL and CSA specifications apply to an absolute minimum input voltage of -60 V dc, wherein battery return (BR) and Logic Return (LR) are properly grounded. The BR and LR are grounded at the system ground window according to Nortel Networks corporate grounding standard CS 1422.
- In the international market, specifications apply to an absolute maximum input voltage of -72 V dc, wherein BR and LR are properly grounded. The BR and LR are grounded at the system ground window according to Nortel Networks corporate grounding standard CS 1422.
- ANSI UL std. 1950, 3rd ed. Safety of Information Technology Equipment including Electrical Business Equipment
- CSA C22.2 No. 234-M90 Safety of component Power Supply
- EN 60950-1, 2001 Information Technology Equipment
- IEC 60950-1, 2001 Information Technology Equipment

Compliance to electrical and safety standards

WARNING

Damage to equipment by electromagnetic interference

To meet electromagnetic interference (EMI) regulatory requirements and thermal specifications, all empty slots must be filled with a blank processor card (NTBP23). Additionally, each empty power supply bay requires a power supply blank to meet both EMI and thermal specifications.

Nortel Networks Multiservice Switch equipment complies with North American and international regulatory safety requirements.

Chapter 7
Multiservice Switch 7480

See the following sections for information about Nortel Networks Multiservice Switch 7480:

- “Multiservice Switch 7480 shelf assembly” (page 150)
- “Multiservice Switch 7480 configurations” (page 154)
- “Multiservice Switch 7480 termination panels” (page 158)
- “Multiservice Switch 7480 environmental requirements” (page 163)
- “Multiservice Switch 7480 ventilation and access clearances” (page 165)
- “Multiservice Switch 7480 thermal engineering guidelines” (page 167)
- “Multiservice Switch 7480 processor card requirements” (page 170)
- “Multiservice Switch 7480 ac power source requirements” (page 170)
- “Multiservice Switch 7480 ac power input requirements” (page 170)
- “Multiservice Switch 7480 ac power cords” (page 171)
- “Multiservice Switch 7480 dc power source requirements” (page 172)
- “Multiservice Switch 7480 dc power input and wiring requirements” (page 173)
- “Multiservice Switch 7480 grounding requirements” (page 174)
- “Multiservice Switch 7480 alarms” (page 179)
- “Multiservice Switch 7480 standards compliances” (page 184)

Multiservice Switch 7480 shelf assembly

Nortel Networks Multiservice Switch 7480 contain the equipment shown in the following figure. Nortel Networks recommends operating a the device with a spare control processor (CP) to provide the maximum robustness and redundancy; however, it is not required. For specific dimensions and weights, see “Multiservice Switch 7480 dimensions and weights” (page 151).

To see the ac and dc shelf assemblies, see “Multiservice Switch 7480 ac and dc shelf assemblies” (page 153). Both versions have replaceable power supplies.

Figure 42
Multiservice Switch 7480 shelf assembly

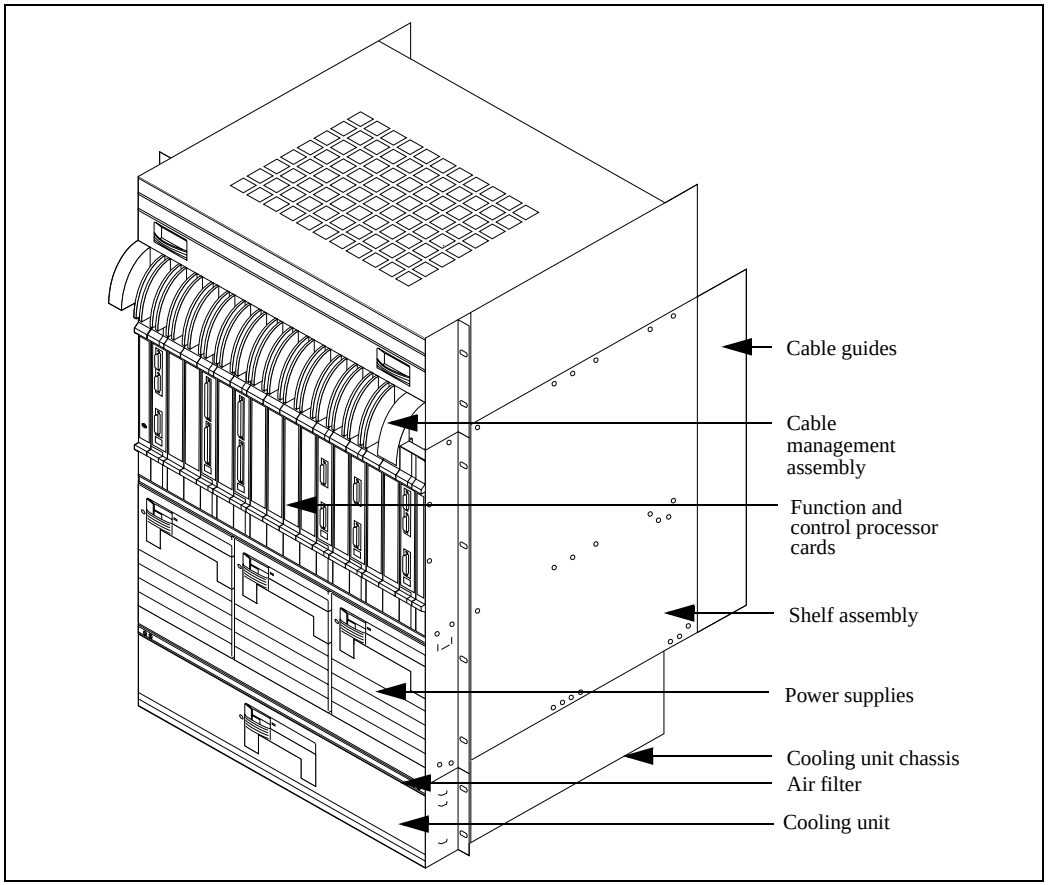

Multiservice Switch 7480 dimensions and weights

This table summarizes the approximate dimensions and weights of the hardware you may be handling.

Table 22
Multiservice Switch 7480 dimensions and weights

Equipment	Outside dimensions (height x width x depth)	Weight
Shelf assembly with cooling unit, air filter assembly, cable management unit, 3 power supplies, 2 CPs, 14 FPs	84.5 cm x 44.5 cm x 50 cm (33.25 in. x 17.5 in. x 19.75 in.)	80.6 kg (177 lb)
Empty shelf assembly ***Note:*** This set of dimensions does not include the cable management unit or the cooling unit. The depth measurement includes cable guides.	53.5 cm x 44.5 cm x 50 cm (21 in. x 17.5 in. x 19.75 in.)	20.9 kg (46 lb)
Cable management unit	18 cm x 44.5 cm x 48 cm (7 in. x 17.5 in. x 18.75 in.)	5.5 kg (12 lb)
Cooling unit shelf, including air filter assembly	13.5 cm x 44.5 cm x 37.5 cm (5.25 in. x 17.5 in. x 14.75 in.)	9.1 kg (20 lb)
Power supply (ac) ***Note:*** The depth measurement includes the connector on the back.	19 cm x 15 cm x 41 cm (7.5 in. x 5.75 in. x 16 in.)	6.6 kg (14.5 lb)
Power supply (dc) ***Note:*** The depth measurement includes the connector on the back.	19 cm x 15 cm x 41 cm (7.5 in. x 5.75 in. x 16 in.)	6.2 kg (13.7 lb)
Power supply (blank)	17.0 cm x 14.4 cm x 36.7 cm (6.7 in. x 5.7 in. x 14.0 in.)	1.0kg (2.2lb)

Multiservice Switch 7480 ac and dc shelf assemblies

There are two types of Nortel Networks Multiservice Switch 7480, one for ac installations and one for dc installations.

Figure 43
Multiservice Switch 7480 ac and dc shelf assemblies

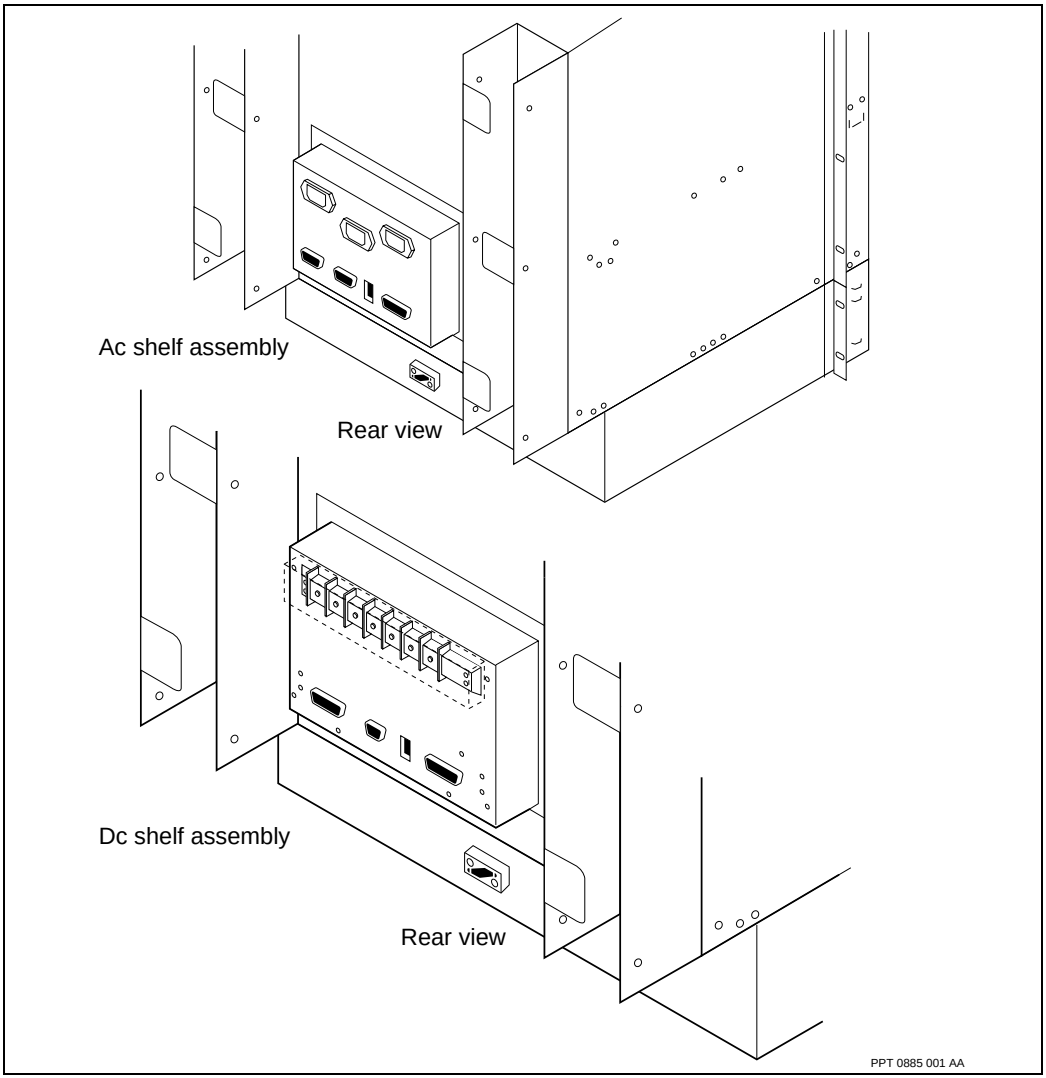

Multiservice Switch 7480 configurations

Nortel Networks Multiservice Switch equipment provides maximum configuration flexibility. Your installation may include configurations similar to these:

- “Multiservice Switch cabinet containing one Multiservice Switch 7480” (page 155)
- “Multiservice Switch cabinet containing two Multiservice Switch 7480s” (page 156)
- “Standard 19-inch rack with two Multiservice Switch 7480s” (page 157)

See “Multiservice Switch 7480 termination panels” (page 158) for more hardware configurations.

Figure 44
Multiservice Switch cabinet containing one Multiservice Switch 7480

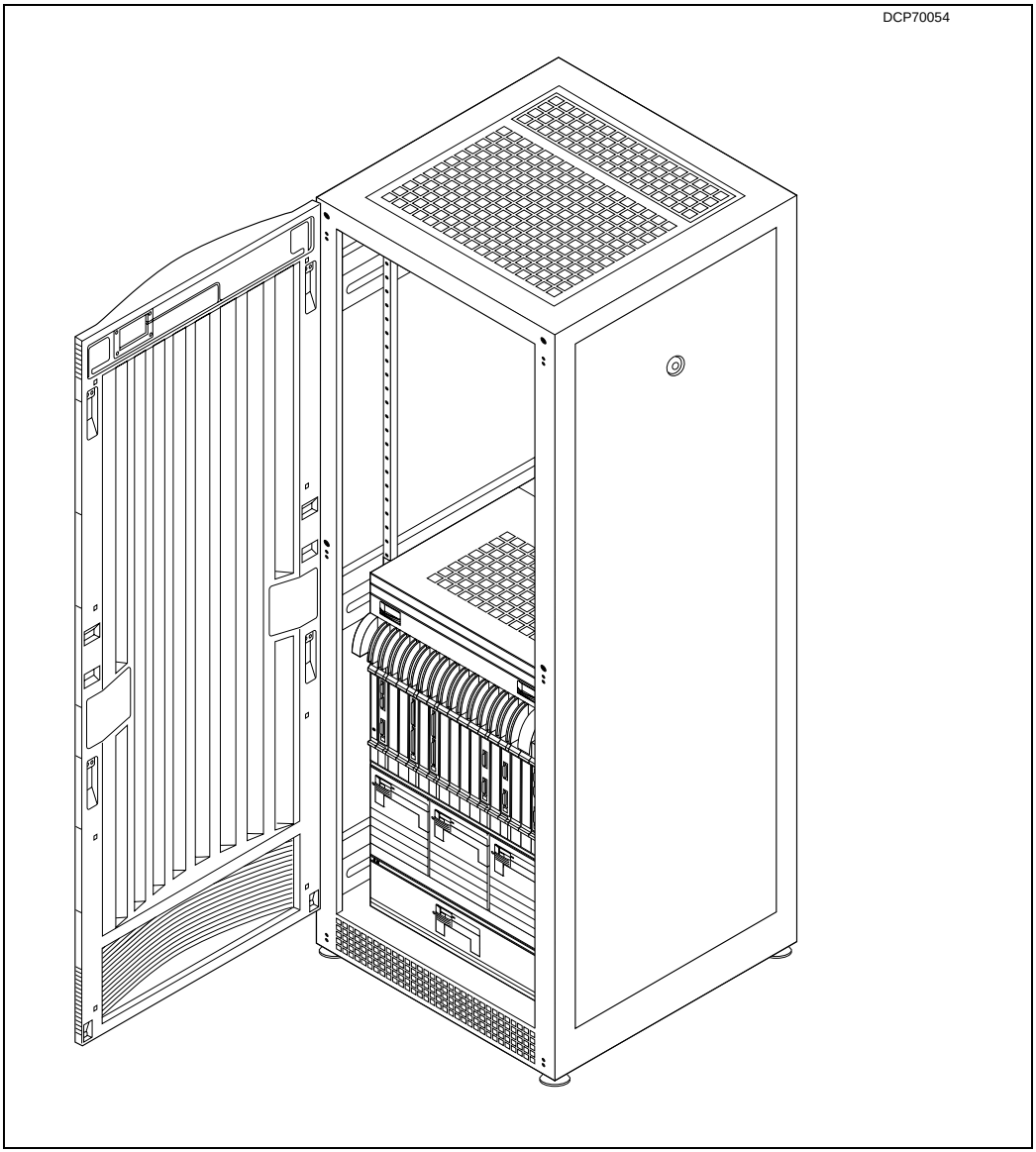

Figure 45
Multiservice Switch cabinet containing two Multiservice Switch 7480s

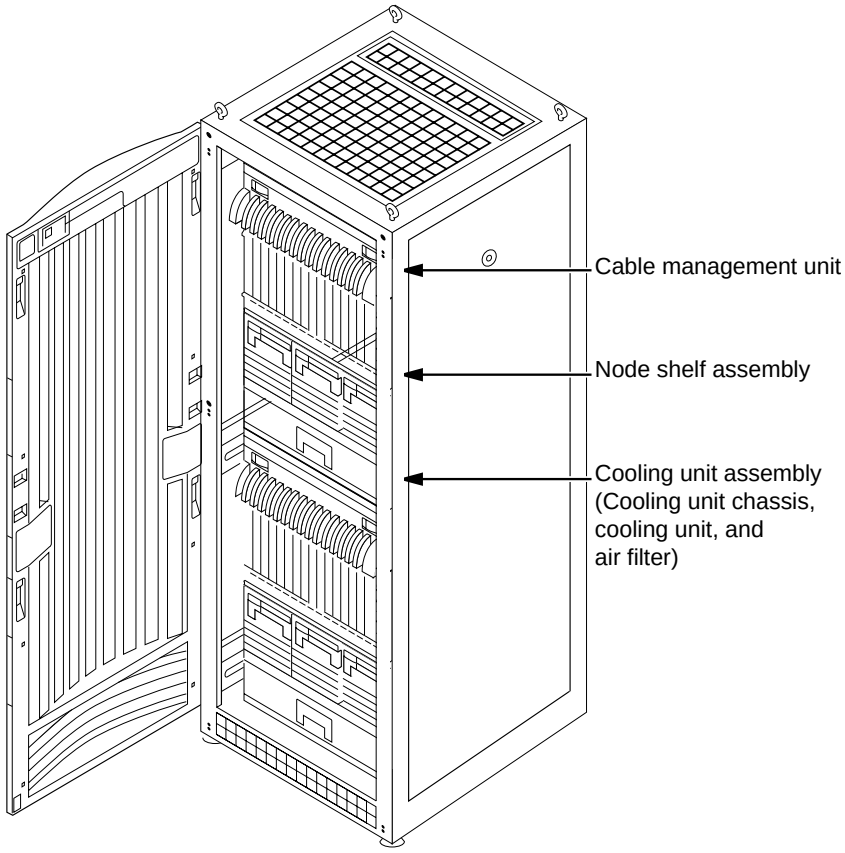

Figure 46
Standard 19-inch rack with two Multiservice Switch 7480s

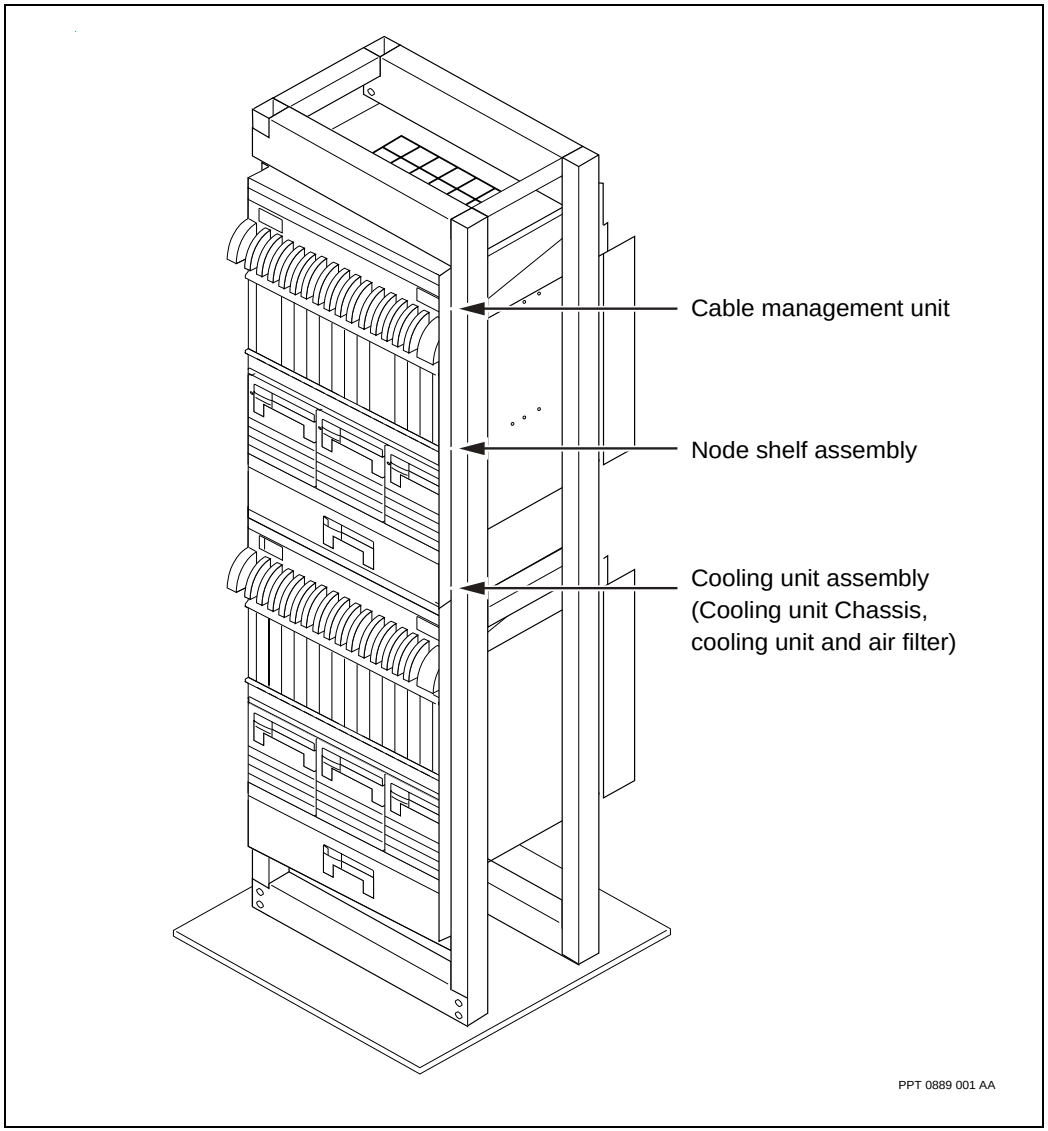

Multiservice Switch 7480 termination panels

Nortel Networks Multiservice Switch 7480 uses 19” termination panels. A Multiservice Switch cabinet equipped with one device can accommodate 14 termination panels in that cabinet. You can install seven panels in the upper front portion of the cabinet and seven panels in the upper rear portion of the cabinet.

If you install a second device in a cabinet, you may need to move your termination panels to a separate cabinet or rack.

If you install termination panels in a separate 19-inch cabinet, leave at least 76 cm (30 in.) of space around the cabinet for access.

The following illustrations show some of the possible termination panel configurations for Multiservice Switch 7480:

- “Multiservice Switch cabinet with one Multiservice Switch 7480 and termination panels” (page 159)
- “Standard 19-inch rack with termination panels” (page 160)
- “Standard 19-inch rack with one Multiservice Switch 7480 and termination panels” (page 161)
- “Multiservice Switch 7480 with termination panels—Multiservice Switch cabinet in a standard 19-inch rack” (page 162)

Figure 47
Multiservice Switch cabinet with one Multiservice Switch 7480 and termination panels

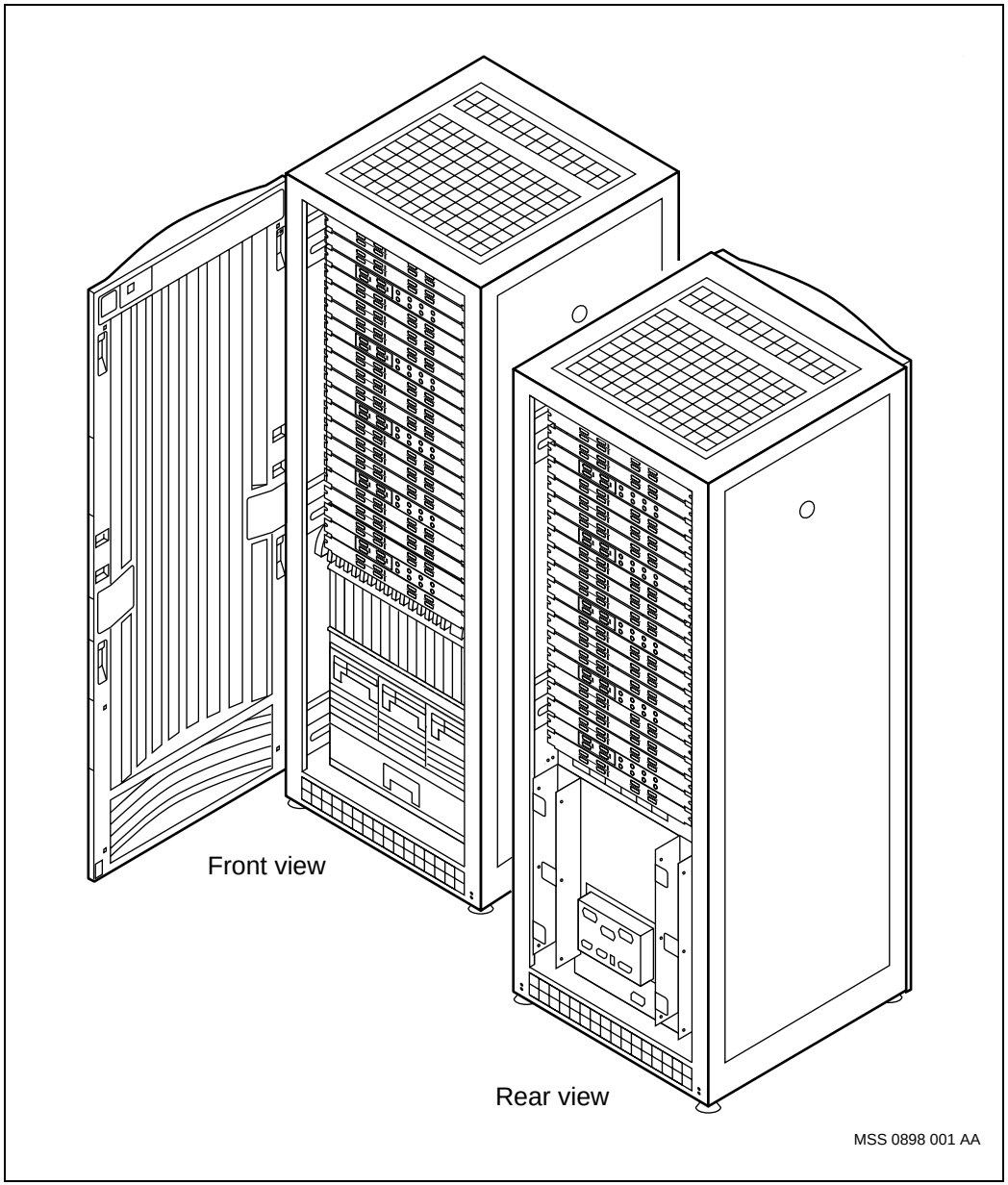

Figure 48
Standard 19-inch rack with termination panels

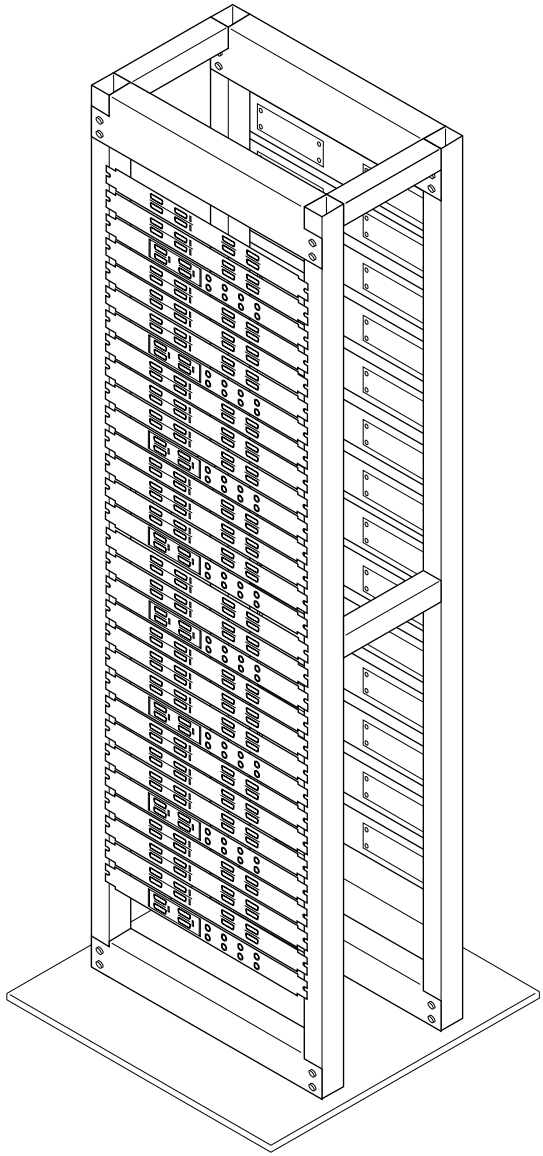

PPT DCP70144

Figure 49
Standard 19-inch rack with one Multiservice Switch 7480 and termination panels

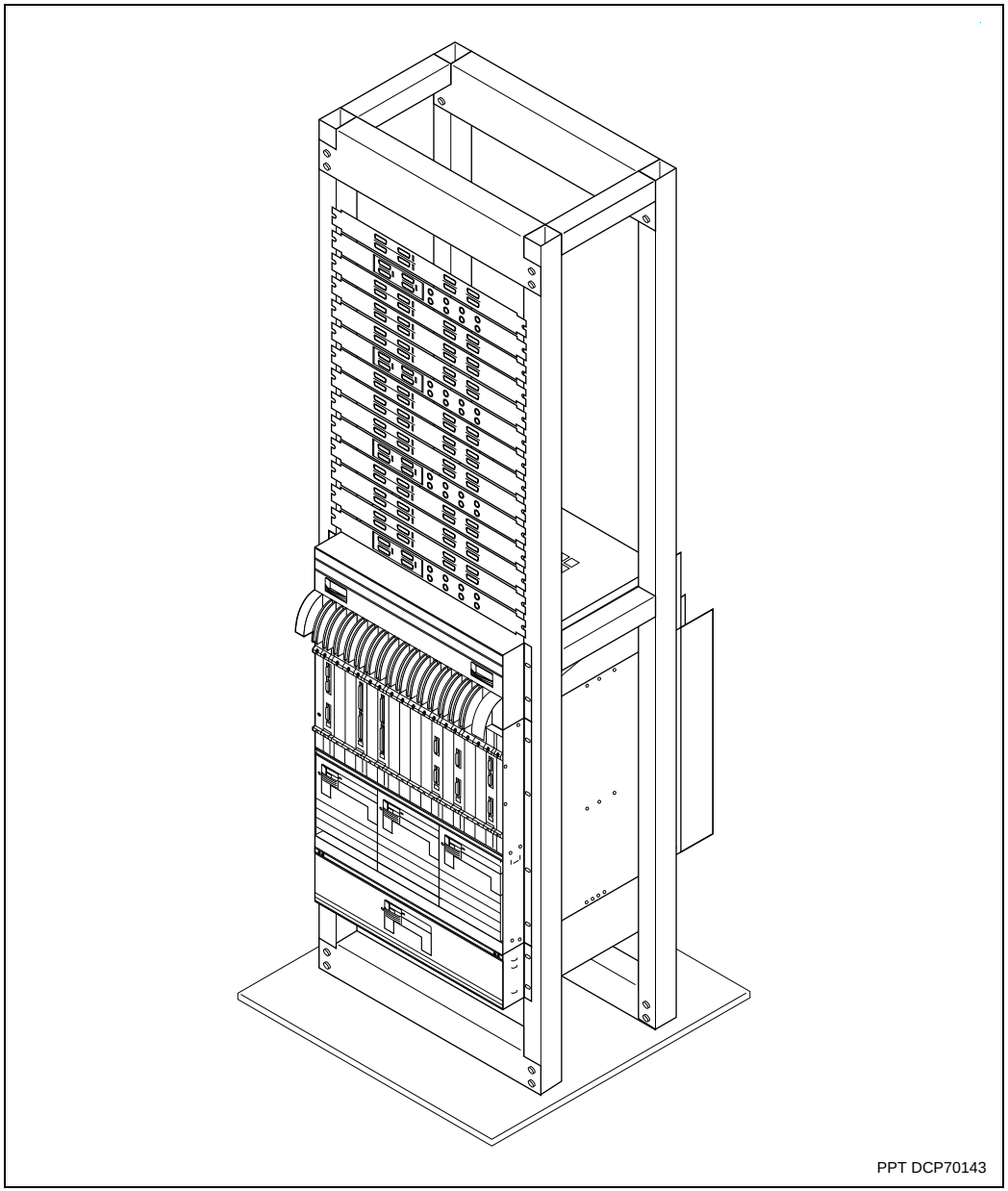

Figure 50
Multiservice Switch 7480 with termination panels—Multiservice Switch cabinet in a standard 19-inch rack

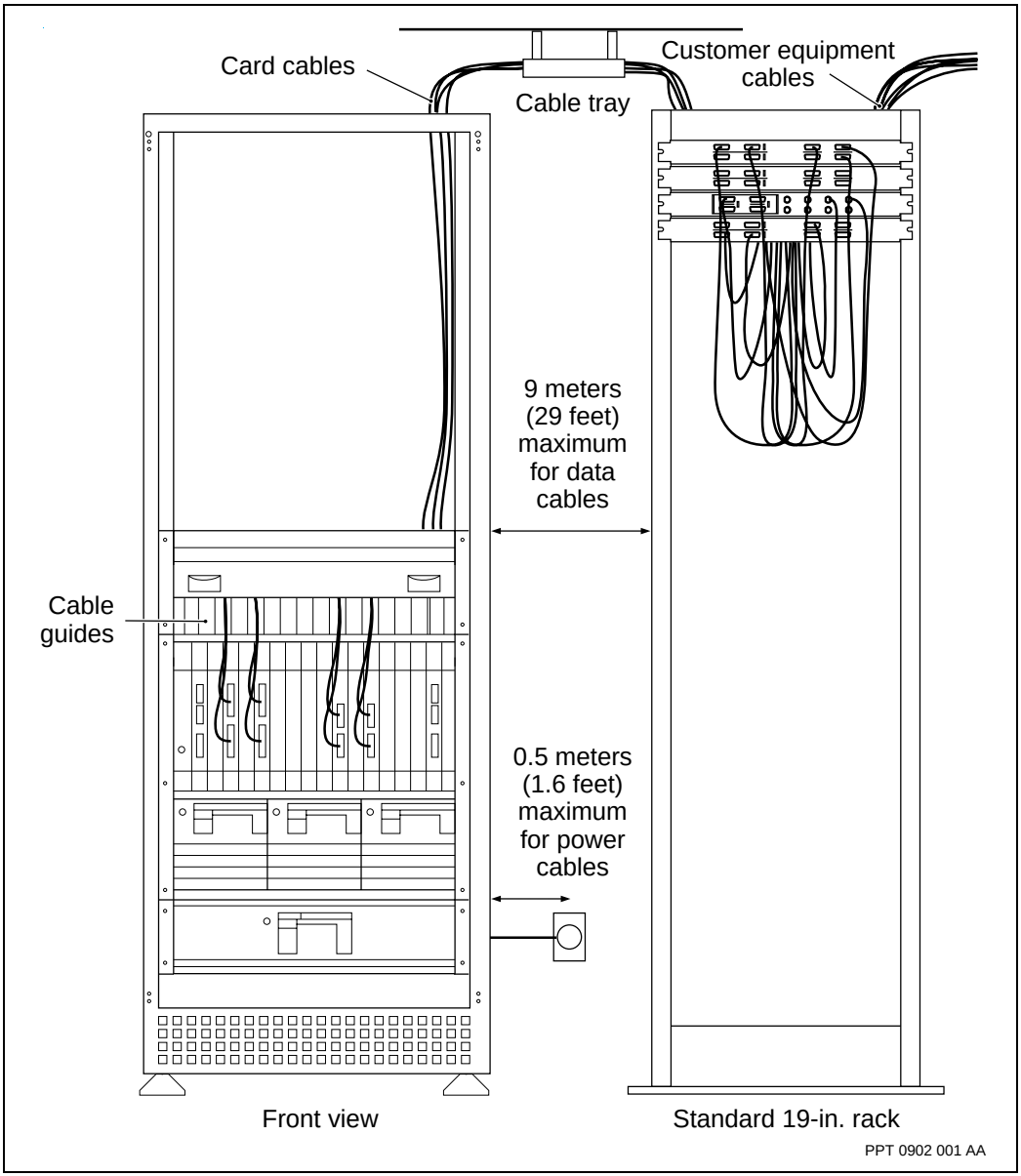

Multiservice Switch 7480 environmental requirements

WARNING
Damage to equipment; electromagnetic interference
To meet EMI regulatory requirements and thermal specifications, each empty slot must be filled with a blank processor card (NTBP23). Additionally, each empty power supply bay requires a power supply blank to meet both EMI and thermal specifications.

The recommended environmental conditions for Nortel Networks Multiservice Switch equipment are given in this table.

Table 23
Environmental requirements

Environmental factor	Mode	Specification
Temperature	Operating	10 to 40 degrees Celsius (one Multiservice Switch 7480 installed in a cabinet with doors)
		10 to 30 degrees Celsius (two Multiservice Switch 7480s, or one Multiservice Switch 7480 and one Multiservice Switch 7440 installed in a cabinet with doors)
		10°C to 35°C (two Multiservice Switch 7480s, or one Multiservice Switch 7480 and one Multiservice Switch 7440 installed in a cabinet without doors)
	Rate of Change	<10 degrees Celsius per hour
	Storage	-40 to +70 degrees Celsius
	Rate of Change	<100 degrees Celsius per hour
Relative Humidity	Operating	10% to 80% non-condensing (5.2 kPa pressure maximum)
	Storage	10% to 80% non-condensing (5.2 kPa pressure maximum)
(Sheet 1 of 2)		

Table 23 (continued)
Environmental requirements

Environmental factor	Mode	Specification
Altitude	Operating	61 m (200 ft) below sea level to 2000 m (6600 ft) above sea level
Particulate atmosphere		Class 100,000 (Fed. Std. No. 209B)
(Sheet 2 of 2)		

Multiservice Switch 7480 ventilation and access clearances

A fully configured dual-shelf system generates about 3540 W, 1770 W from each shelf assembly. Be sure to observe the specified clearances for ventilation and access.

Figure 51
Multiservice Switch 7480 shelf assembly clearances

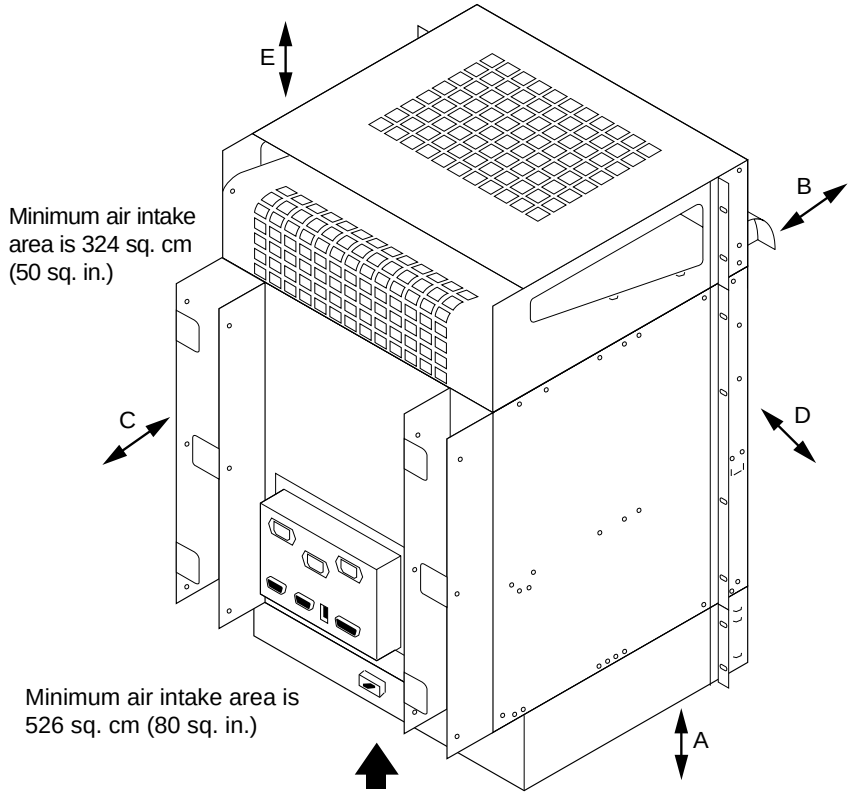

Minimum clearances between shelf assembly and cabinet		
	Area	Clearance
A	Fan drawer to base of cabinet	3.81 cm (1.500 in.)
B	Cable management unit to cabinet front drawer	0.64 cm (0.250 in.)
C	Cable channel to cabinet rear door	0.96 cm (0.375 in.)
D	Shelf side panels to cabinet side panels	3.5 cm (1.375 in.)
E	Cable management unit to top of cabinet	0.0 cm (0.0 in.)

PPT 0886 001 AA

Airflow velocity

A fully functional fan tray in Nortel Networks Multiservice Switch 7480 generates 0.75 m/s of airflow. The amount of airflow is reduced to 0.55 m/s when a single fan unit fails.

Noise levels

The noise level for Nortel Networks Multiservice Switch 7480 is within the limits specified in the Telcordia GR-63-CORE standard.

The specific measurement for a front-facing device in a seismic cabinet with the door closed is 56.34 dBA.

Multiservice Switch 7480 thermal engineering guidelines

In addition to the ventilation and access requirements of Nortel Networks Multiservice Switch equipment, both the system configuration and the placement of processor cards have an impact on the operating temperature of the equipment. Air inlet and outlet temperatures can also have an impact on the long term reliability of hardware components.

In general, it is prudent to keep operating temperatures as low as possible. Therefore, when planning your system configuration, ensure that you are familiar with the information in the following sections:

- “Temperature impact of slot position in a Multiservice Switch 7480” (page 167)
- “Temperature considerations for Media Gateway configurations” (page 168)
- “Temperature impact of system configurations” (page 169)
- “Air inlet and outlet temperatures” (page 169)

Temperature impact of slot position in a Multiservice Switch 7480

Using slot number eight as a base, the table “Temperature impact of slot position on processor cards” (page 168) shows the temperature increase for processor cards for each slot on the shelf. All temperature increases are stated in degrees Celsius.

Table 24
Temperature impact of slot position on processor cards

Slot number	Temperature delta with respect to slot eight
0	1
1	0.6
2	0.3
3	1.4
4	3.4
5	3.4
6	0.7
7	0.7
8	0
9	1.4
10	4.5
11	2.6
12	0.8
13	1.1
14	0.8
15	10.5

Temperature considerations for Media Gateway configurations

Special considerations must be made for voice services processors (VSPs) when they are installed as part of a dual shelf configuration in a Nortel Networks Multiservice Switch cabinet, or seismic cabinet. Slot choices for VSPs are restricted for elevations greater than 400 m (437.4 yds.) above sea level. The VSP should not be installed in slots 4, 5, 10, or 11 because of the their reduced cooling ability. In a redundant configuration this will not reduce shelf capacity.

Temperature impact of system configurations

Using a base system of a single Nortel Networks Multiservice Switch 7480 installed in an open frame at sea level, the table "Temperature impact of system configurations" (page 169) shows the impact of various system configurations on the shelf operating temperature. All temperatures are stated in degrees Celsius.

Table 25
Temperature impact of system configurations

Configuration	Both fans running	Single fan failed
One shelf in a cabinet with doors	0	0
Two shelves in an open frame	2	4
Two shelves in a cabinet with doors	10	32
One shelf in an open frame, 2000 m (2187.2 yds.) above sea level	5	10
Two shelves in an open frame, 2000 m (2187.2 yds.) above sea level	8	15

Air inlet and outlet temperatures

When operating Nortel Networks Multiservice Switch equipment, it is prudent to keep temperatures as low as possible. Conventional theory suggests that the mean time between failures (MTBF) can halve for every 5× Celsius (41× Fahrenheit) rise in temperature.

For long term reliability, do not allow the air inlet temperature for a shelf to exceed 40× C (104× Fahrenheit). The maximum air inlet temperature for short term functionality (as defined in Telcordia GR-63-CORE, no more than a total of 96 hours for not more than 15 days in a year) is 55× C (131× Fahrenheit).

For long term reliability, the air outlet temperature for a shelf should not exceed 60× C (140× Fahrenheit). The maximum air outlet temperature for short term functionality is 75× C (167× Fahrenheit).

Multiservice Switch 7480 processor card requirements

The minimum processor card requirements for Nortel Networks Multiservice Switch 7480 are one of the following:

- one CP in slot 0, plus three FPs
- one CP in slot 0 and one CP in slot 15 (standby), plus one FP in any other slot

Multiservice Switch 7480 ac power source requirements

WARNING
Damage to equipment by electromagnetic interference
Each empty power supply bay must be filled with a power supply blank in order to meet EMI regulatory requirements and thermal specifications.

For ac installations, the power supply must be within 3 m (10 ft) of an individually-fused wall outlet. The wall outlet must accept a 3-prong plug.

Each ac power supply must come from a separate disconnect device at the ac distribution panel. Each ac outlet must be wired separately to the ac distribution panel. The protection circuit current rating must be:

- 15 A (120 V ac) for North America
- 6.3 A (240 V ac) for Europe

Ac power supplies are self-adjusting to the ac primary voltage input in the ranges of:

- 100 to 120 V ac for North America
- 200 to 240 V ac for Europe

Multiservice Switch 7480 ac power input requirements

For ac installations, the power source can be either 120 or 220 V ac single phase.

Table 26
Multiservice Switch 7480 ac power requirements

Parameter	220 V ac Input	120 V ac Input
Nominal input voltage	200 to 240 V ac with input operational range of 180 to 250 V ac	100 to 120 V ac with input operational range of 92 to 132 V ac
Current	5 A max	10 A max
Frequency	47 to 63 Hz	47 to 63 Hz
Output power	600 W	600 W

To prevent interruption of service, the power for each supply of a fully equipped device should be supplied from an uninterruptable power supply rated at 2000 W. This rating accounts for inefficiencies in the uninterruptable supply itself, and ensures that the power requirements are met under all circumstances.

Multiservice Switch 7480 ac power cords

Power cords are not shipped with Nortel Networks Multiservice Switch ac shelves but can be ordered from Nortel Networks, or you can supply your own. Nortel Networks ac power cords are regulatory-approved for use with Multiservice Switch equipment, and are 3 m (9.8 ft) long. Do not use extension cords.

Power cords should meet safety standards for the country of installation and should be marked with the appropriate certification marks. For details on common certification marks, approved organizations, and harmonization markings, see the *Power Cord Selection Guide* delivered with your equipment.

If you are installing a device in North America, see “North American power cord specifications” (page 172).

If you are installing a device in Europe, see “European power cord specifications” (page 172).

North American power cord specifications

Your power cords must meet these specifications:

- Plug: grounding plug (North American) NEMA 5-15P
- Rating: 13 A, 125 V ac
- Conductor size: type SJT, 16 AWG (1.0 mm^2)
- Receptacle/Termination: grounding receptacle IEC 320/CEE22 Type 1B

European power cord specifications

Your power cords must meet these specifications:

- Plug: continental European set plug
- Rating: 10 A, 250 V ac
- Conductor size: HAR flexible cord, 16 AWG (1.0 mm^2)
- Receptacle/Termination: grounding receptacle IEC 320/CEE22 type 1B

Multiservice Switch 7480 dc power source requirements

WARNING

Damage to equipment by electromagnetic interference

Each empty power supply bay must be filled with a power supply blank in order to meet EMI regulatory requirements and thermal specifications.

To maintain an IEC 950 safety classification, you must protect the power feeds to a dc power supply with external circuit breakers or fuses. Doing so is critical to the safe operation of equipment. In -48 V dc installations (typically North American), power feeds into the system require a 60 V dc rated circuit breaker or fuse. In -60 V dc installations (typically European), power feeds into the system require an 80 V dc rated circuit breaker or fuse. In all cases the circuit breaker or fuse must be rated for 30 A dc per unit or 60 A dc per device and have appropriate regulatory approvals.

The power source must be connected to a reliably grounded dc source obtained from an isolation transformer. The dc power source must be within the range of -39 to -72 V dc and capable of providing 1000 W per unit, rated at 25 A dc for -39 V dc, and 14 A dc for -72 V dc, or 2000 W per device, rated at 50 A dc for -39 V dc, and 28 A dc for -72 V dc.

Multiservice Switch 7480 dc power input and wiring requirements

You must supply your own dc power cords. Cables must be able to carry 30 A dc and must be protected with a 30-amp circuit breaker or fuse.

The nominal input voltage can be -48/-60 V with an operational range for input power of -40 to -72 V dc. The output power cannot exceed 600 W.

Input voltage under minimum battery operating conditions must supply a minimum of 39.5 V to the power supply. For example, if the minimum battery specification for your site is 42 V, then the voltage can drop only 2.5 V.

The maximum length for different wire gauges for a voltage drop of 1 V are

- 10 gauge (2.58 mm): 6.6 m (20 ft)
- 8 gauge (3.26 mm): 10 m (30 ft)
- 6 gauge (4.12 mm): 16.6 m (50 ft)

These lengths are the maximum distances from the power source. Total loop length (battery and battery return) is double the length.

The dc power cables are connected to a seven-position barrier-type terminal strip. The connector is a ring lug #10 stud size. The screws are 190-32 (#10).

In all cases, the -48/-60 V dc power feeds into the system must be protected with an external circuit breaker or fuse, with appropriate voltage ratings and regulatory approvals.The disconnect device must be external to the Nortel Networks Multiservice Switch cabinet, and must reside in the same room with the cabinet. It must be at least as fast as the maximum allowable trip times indicated below. A fast-acting protection device can be used since the inrush current into the system is controlled to be less than 25 A peak. The protection device must be capable of supporting 23 A dc indefinitely. It must

have a voltage rating of 48/60 V dc nominal and a current rating of 30 A nominal for each power supply. An AIRPAX 30 A circuit breaker from the IEG family with a voltage rating of 80 V dc and with a delay type 52 meets these requirements.

Table 27
Allowable trip times for Multiservice Switch 7480 power feed protection devices

Current (amps)	30	37.5	45	60	120	180	240	300
Maximum trip time (seconds)	-	60	30	10	2	1	0.5	0.1

Multiservice Switch 7480 grounding requirements

To protect both personnel and equipment, you must connect ac grounds from all equipment (including cabinets, termination panel cabinets, local operator terminal, and external dc grounds) to a single ac distribution panel ground point. You must also connect all equipment frames and the external dc power supply returns to this common grounding scheme.

Nortel Networks provides the grounding straps that connect cabinets to a termination panel and the grounding plates that ground termination panels together. You must provide enough 6 gauge (4.12 mm) wire to connect each cabinet and all other equipment to the ac distribution panel ground.

The shelf assembly contains an electrostatic discharge (ESD) jack. Plug an antistatic wrist strap into this jack. You must wear an antistatic wrist strap whenever you handle hardware, such as the FPs and CPs, that is sensitive to electrostatic discharge.

The ac power supply's ac ground pin is part of the ac connector and is located at the rear of the unit as shown in "Ac power supply ground pin" (page 175).

Figure 52
Ac power supply ground pin

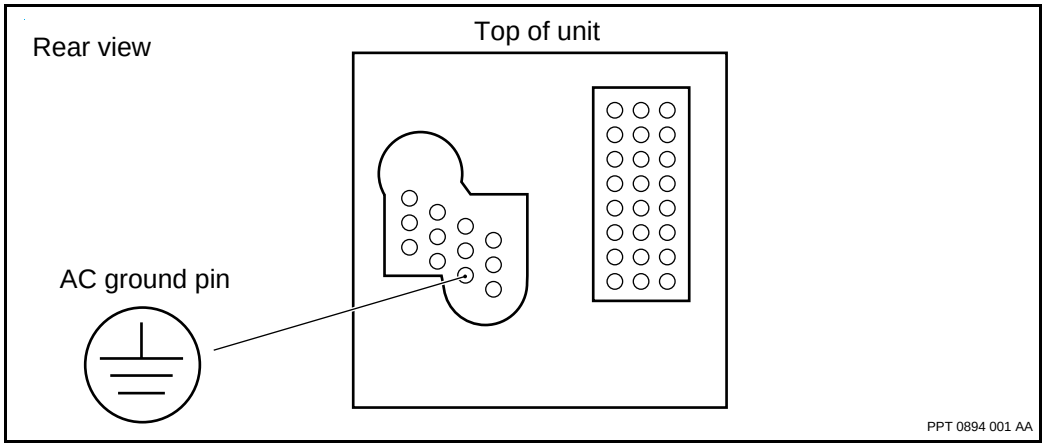

Multiservice Switch 7480 ac grounding scheme

Grounding for the ac configuration is based on a single-point ground concept where each device is a separate entity. The ground is taken through the ac plug to the ground window by way of a fuse panel. You must also connect all equipment frames to the grounding point.

Figure 53
Ac grounding scheme

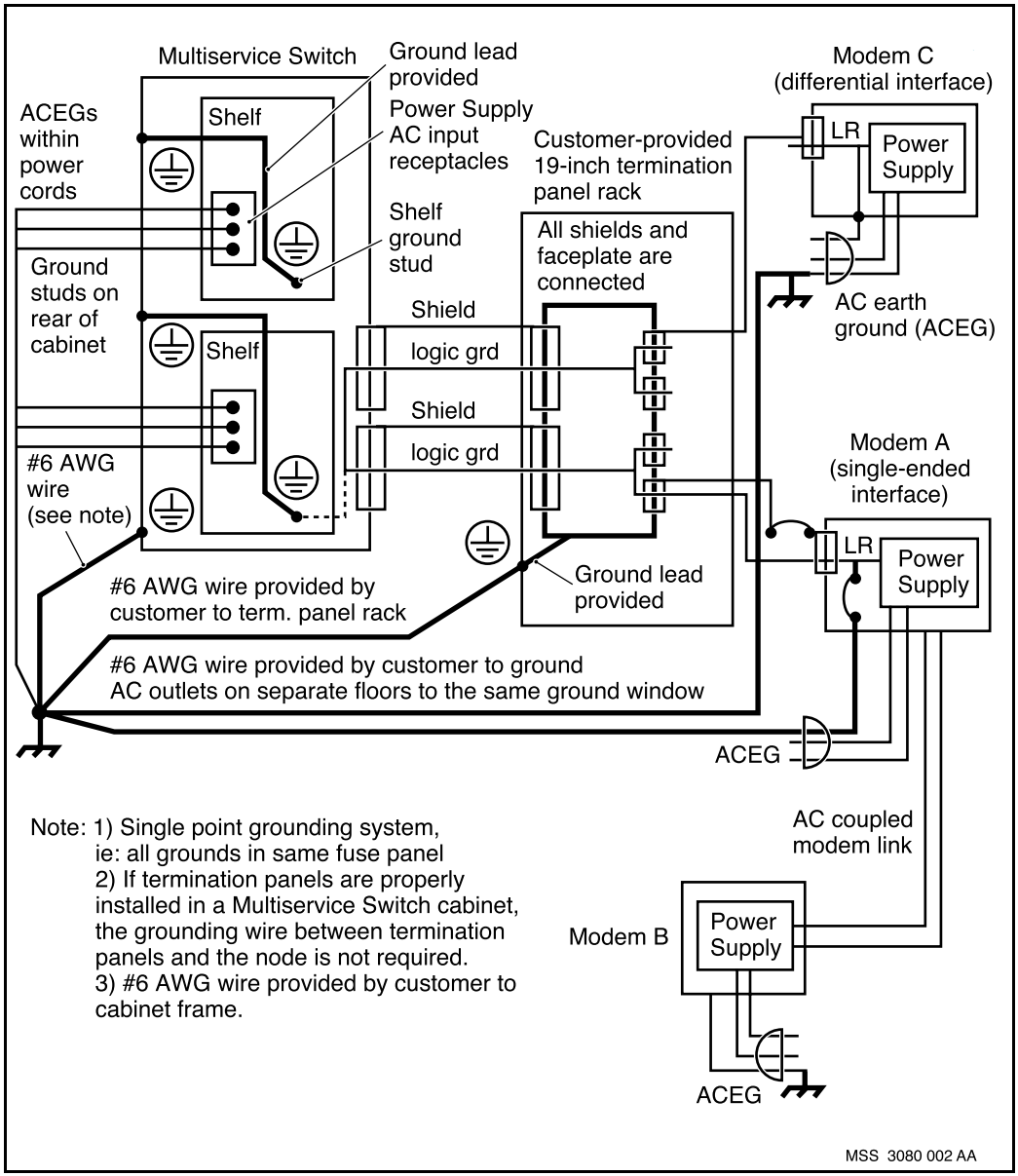

Multiservice Switch 7480 dc grounding scheme

Grounding for the dc configuration is based on separate signal and frame grounds. These are separately connected directly to the ground window. External dc power supply returns must also be connected to the common grounding point.

Figure 54
Dc grounding scheme

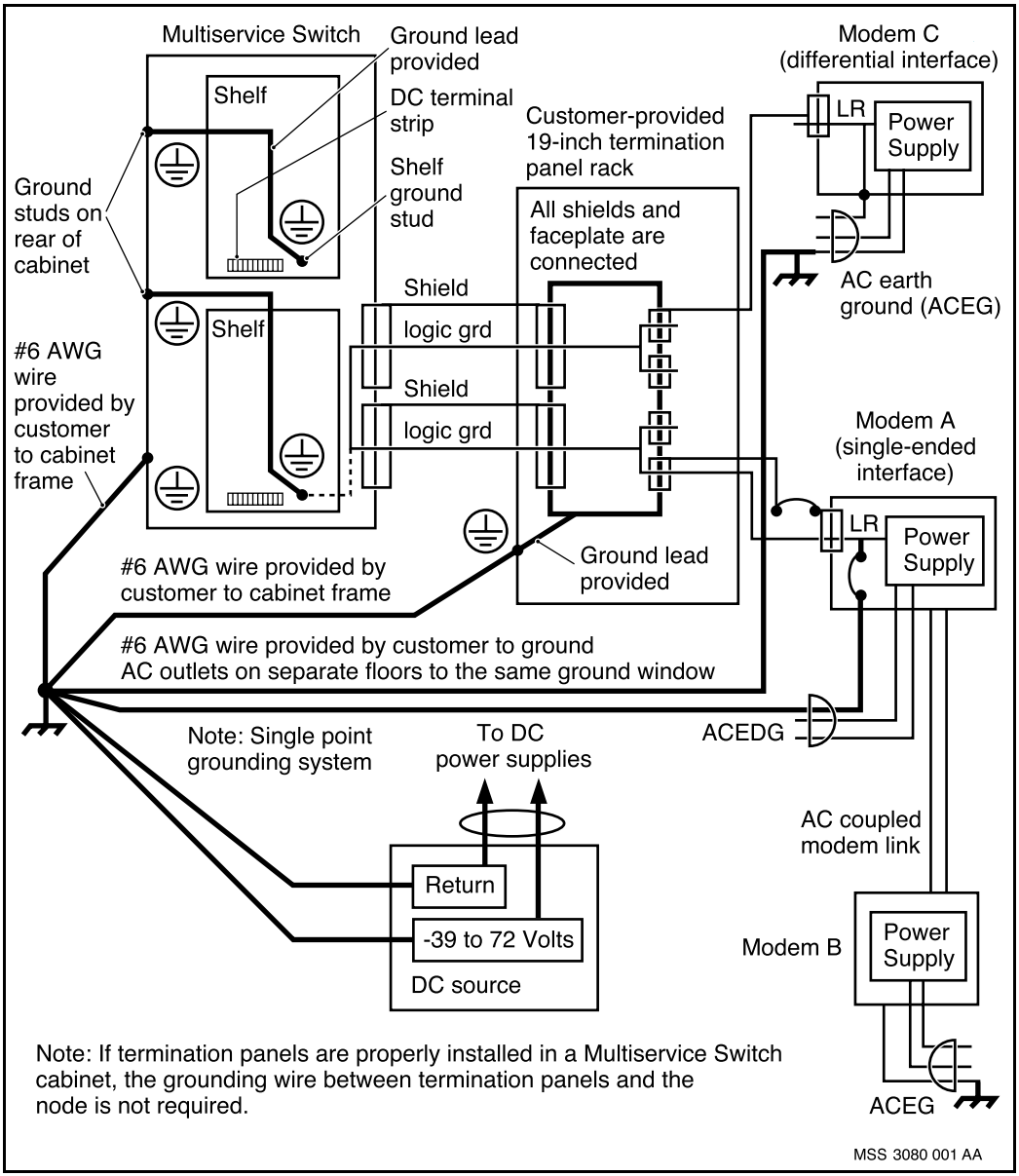

Multiservice Switch 7480 alarms

You must install either a rack-mounted alarm panel or a door alarm cable to monitor alarms on site. If you want to display alarms at a remote location, Nortel Networks Multiservice Switch 7440 and Multiservice Switch 7480 provide a remote external alarm connection.

Hardware alarms for Multiservice Switch 7480 are displayed on LEDs on the cabinet or on a rack-mounted alarm panel. Red indicates a major alarm has been generated; yellow indicates a minor alarm. A green LED indicates that there is power to the shelf.

The status of most hardware equipment on Nortel Networks Multiservice Switch 7400s can also be verified in software. NN10600-520 *Nortel Networks Multiservice Switch 7400/15000/20000 Fault and Performance Management: Troubleshooting* describes the procedures for verifying hardware status.

A major alarm would be activated if a FP or control processor (CP) fails.

A minor alarm is activated if one of the following occurs:

- a power supply fails
- a fan in the cooling unit fails
- the cooling unit becomes disconnected from the shelf assembly

Multiservice Switch devices do not generate an alarm if you:

- remove a power supply
- toggle the power supply control on the faceplate to the standby position

If your installation has external alarms, the equipment also generates an external alarm. See “External alarms” (page 180)

To reset a minor alarm, correct the fault. After you correct the fault, the device resets the minor alarm contacts. After you clear a major alarm, you can reset the alarm hardware to clear the alarm.

For information on alarm cabling and external alarm installation see “Alarm hardware installation” in NN10600-175 *Nortel Networks Multiservice Switch 7400 Hardware Installation, Maintenance, and Upgrade*.

External alarms

Connecting the external alarm cabling is optional. If you do, the procedure is the same for Nortel Networks Multiservice Switch 7440 and Multiservice Switch 7480.

Shielded cables are required for the external alarm connections. For pinouts see “Pinout information for alarm connectors” (page 181)

The external alarm cable connects to the cabinet via a D-type, 15-pin connector, labelled “Alarm 1” or “ALM 1. Nortel Networks Multiservice Switch equipment provides dry relay contacts that close when the equipment generates an alarm.” There are three sets of major alarm contacts and three sets of minor alarm contacts. You can use each set to generate alarms at a different location. The figure “Example of a major alarm connection” (page 180) shows an external alarms system that lights a bulb when the shelf generates a major alarm.

Figure 55
Example of a major alarm connection

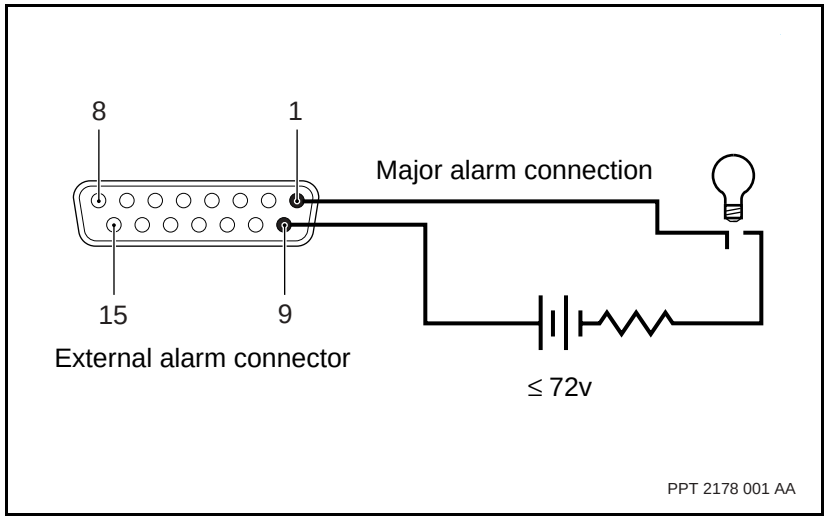

Each set of contacts is rated at 72 V DC, 1 A DC. Your alarm system must provide its own power.

You can insert a switch between the alarm cable and your alarm system to allow you to isolate your alarm system from the device alarm circuit (relay contacts) during repairs. Remember to set the switch to the ON position after any repair.

Pinout information for alarm connectors

This section provides the pinout information for the alarm connectors. The tables are as follows:

- “External alarm connector pinouts” (page 181)
- “Pinout of Multiservice Switch 7480 alarm 2 shelf connector” (page 182)
- “Pinout of a Multiservice Switch 7480 door alarm connector” (page 182)
- “Pinout of Multiservice Switch 7480 cooling unit connector” (page 183)

Table 28
External alarm connector pinouts

Pin number	Contact
1	major alarm connection for location 1
2	major alarm connection for location 2
3	major alarm connection for location 3
4	no connection
5	minor alarm connection for location 1
6	minor alarm connection for location 2
7	minor alarm connection for location 3
8	no connection
9	major alarm connection for location 1
10	major alarm connection for location 2
11	major alarm connection for location 3
(Sheet 1 of 2)	

Table 28 (continued)
External alarm connector pinouts

Pin number	Contact
12	no connection
13	minor alarm connection for location 1
14	minor alarm connection for location 2
15	minor alarm connection for location 3
Note: All relay contacts are normally open.	
(Sheet 2 of 2)	

Table 29
Pinout of Multiservice Switch 7480 alarm 2 shelf connector

Pin number	Signal name
1	major alarm
2	no connection
3	minor alarm
4	no connection
5	12VDOOR
6	ALCOFN
7	ground
8	no connection
9	no connection

Table 30
Pinout of a Multiservice Switch 7480 door alarm connector

Pin number	Signal name
1	ALCONF
2	12VDOOR
(Sheet 1 of 2)	

Table 30 (continued)
Pinout of a Multiservice Switch 7480 door alarm connector

Pin number	Signal name
3	major alarm
4	ground
5	minor alarm
6	FGND
(Sheet 2 of 2)	

Table 31
Pinout of Multiservice Switch 7480 cooling unit connector

Pin number	Signal name
1	24RETFAN1
2	24RETFAN1
3	24RETFAN2
4	ground
5	12VFAN2
6	12VFAN2
7	no connection
8	5V
9	FANFAILN
10	24RETFAN2
11	ground
12	12VFAN1
13	12VFAN1
14	FGND
15	5V N/U

Multiservice Switch 7480 shelf interconnect cable

If you install two Nortel Networks Multiservice Switch 7480s in a Multiservice Switch cabinet or rack, you can use the shelf interconnect cable. The shelf interconnect cable connects the Alarm 2 connectors of both shelves. This connection provides a single source of alarms for the door alarm and the external alarms connector, Alarm 1. The interconnect cable is available separately from Nortel Networks.

Compliance to electrical and safety standards

WARNING

Damage to equipment by electromagnetic interference

To meet electromagnetic interference (EMI) regulatory requirements and thermal specifications, each empty slot must be filled with a blank processor card (NTBP23). Additionally, each empty power supply bay requires a power supply blank to meet both EMI and thermal specifications.

Nortel Networks Multiservice Switch equipment complies with North American and international regulatory safety requirements.

Multiservice Switch 7480 standards compliances

Nortel Networks Multiservice Switch 7480 complies with the following regulatory standards (sorted alphabetically):

- AS/NZ 3548
- CISPR 22 Class A
- CSA certified per CSA C22.2 No. 950-M89 Information Technology Equipment
- European Norm EN60950 (VDE)
- FCC Part 15B Class A system
- EN 55022 Class A
- EN50082-1
- FCC Part 68

- GR-63-CORE
- GR-78-CORE
- GR-1089-CORE
- ICES-003 issue
- Industry Canada CS-03
- Nortel Networks corporate safety standards 9001
- UL Listed. UL1950 Data processing equipment
- VCCI Class 1

The dc power supply complies with the appropriate sections of these documents:

- In North America, UL and CSA specifications apply to an absolute minimum input voltage of -60 V dc, wherein battery return (BR) and Logic Return (LR) are properly grounded. The BR and LR are grounded at the system ground window according to Nortel Networks corporate grounding standard CS 1422.
- In the international market, specifications apply to an absolute maximum input voltage of -72 V dc, wherein BR and LR are properly grounded. The BR and LR are grounded at the system ground window according to Nortel Networks corporate grounding standard CS 4122.
- UL 1950; March, 1989; Safety of Information Technology Equipment
- CSA C22.2 950; October, 1989; Information Technology Equipment
- EN 60950; 1988; Information Technology Equipment

Chapter 8
Multiservice Switch cabinet

This chapter contains a description of Nortel Networks Multiservice Switch cabinets. It includes:

- “Locks on cabinets” (page 187)
- “Cabinet dimensions and weights” (page 188)
- “Cabinet alarm connectors” (page 189)
- “Cabinet environmental requirements” (page 192)

Locks on cabinets

Nortel Networks Multiservice Switch cabinets have locking doors. The two keys that come with the cabinet fit both front and rear doors. Only service personnel should have these keys.

WARNING
Risk of injury by electric shock
Only service personnel should have keys to the cabinet.

WARNUNG
Verletzungsgefahr durch Elektroschock
Der Zugang zum Gerät mit dem Service-Schlüssel ist nur dem Service-Personal gestattet.

Note: The above warning appears in German to comply with VDE regulatory requirements.

Cabinet dimensions and weights

This table summarizes the approximate dimensions and weights of the hardware. Generally, ensure that loading doors, corridors, doorways and elevators leading to the installation room have clearances of at least 2.5 m (8.25 ft) in height and 0.9 m (3 ft) in width.

Table 32
Cabinet equipment dimensions and weights

Equipment	Outside dimensions (height x width x depth)	Weight
Cabinet, as shipped, and loaded on a hand-truck (including the pallet that is shipped with the cabinet)	230 m x 120 m (90 in. x 48 in.)	136 kg (300 lb)
Fully-configured cabinet with doors, 1 shelf assembly, cooling unit, air filter assembly, cable management unit, 3 power supplies, 2 CPs, 14 FPs, and 14 termination panels (excluding cables)	197 cm x 60 cm x 70 cm (78 in. x 24 in. x 28 in.)	200.5 kg 441 lb)
Fully-configured cabinet with doors, 2 shelf assemblies, 2 cooling units, 2 air filter assemblies, 2 cable management units, 6 power supplies, 4 CPs, 28 FPs, and 28 termination panels (excluding cables)	197 cm x 60 cm x 70 cm (78 in. x 24 in. x 28 in.)	313.3 kg (689 lb)
Cabinet with doors (empty)	197 cm x 60 cm x 70 cm (78 in. x 24 in. x 28 in.)	87.7 kg (193 lb)

The figure “Dimensions of a cabinet” (page 189) shows the basic size of the cabinet.

Figure 56
Dimensions of a cabinet

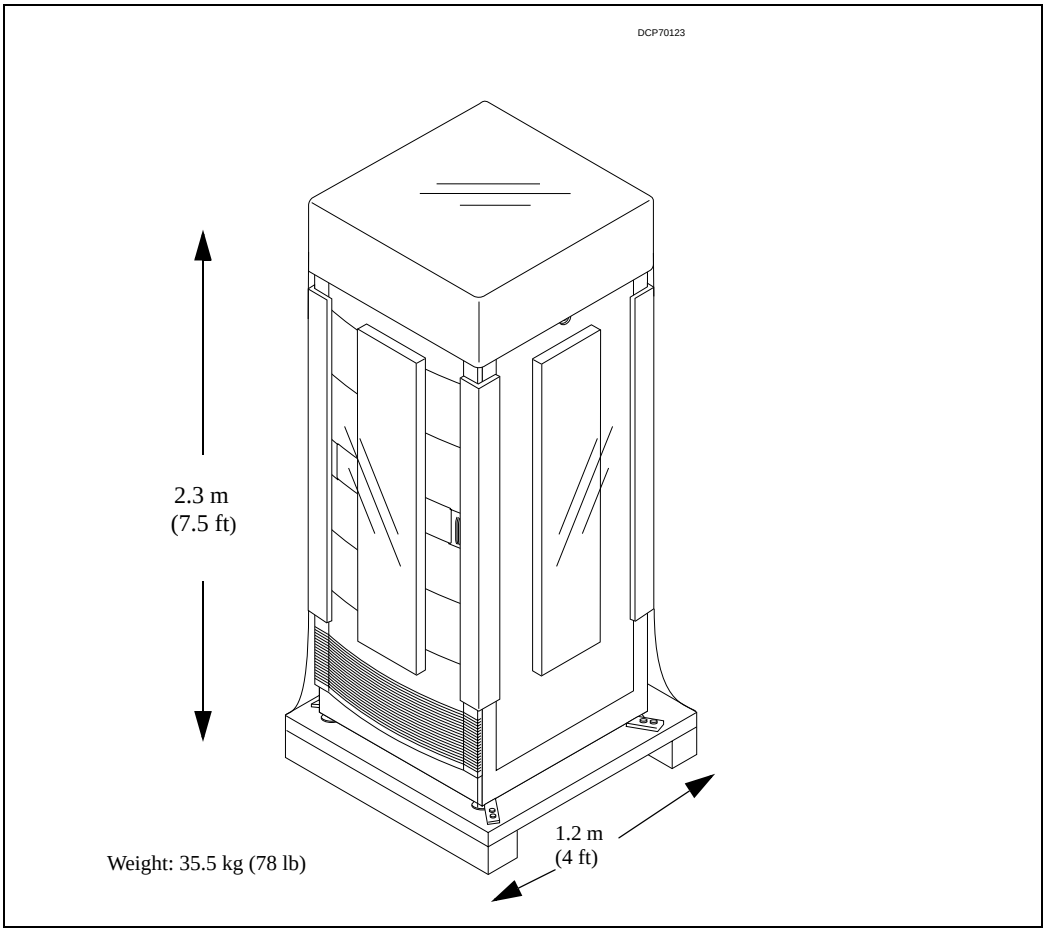

Cabinet alarm connectors

The front doors of Nortel Networks Multiservice Switch cabinets and the rear of the Nortel Networks Multiservice Switch 7440, Multiservice Switch 7460, and Multiservice Switch 7480, contain alarm connectors. Connect the door alarm cable between these connectors if you want the LEDs on the cabinet door to light when the equipment generates a minor or major hardware alarm.

CAUTION

Do not use door alarm connectors for telephones.

Fuer den Ausgang “Door Alarm”! nicht fuer TNV-Anschluss geeighet.

Note: The above warning appears in German to comply with VDE requirements.

The figure “Cabinet alarm connectors” (page 191) shows where the connectors are located.

Figure 57
Cabinet alarm connectors

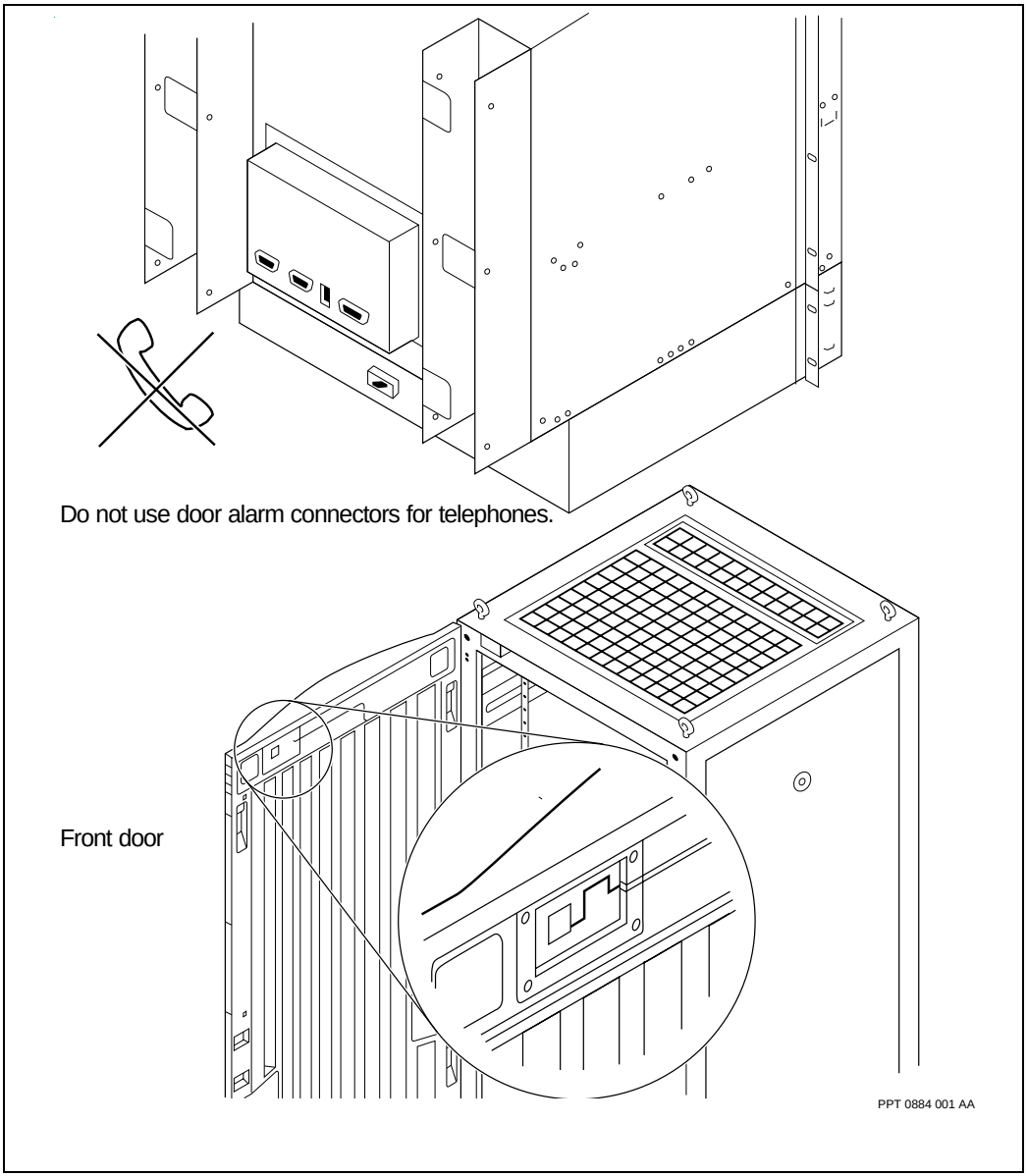

Cabinet environmental requirements

The recommended environmental conditions for hardware are given in “Environmental requirements” (page 163). If you want to install two devices in a cabinet with doors, ensure that the you are familiar with “Multiservice Switch 7480 thermal engineering guidelines” (page 167).

Chapter 9
Seismic cabinet

See the following sections for a description of the seismic cabinet:

- “Seismic cabinet dimensions and weights” (page 193)
- “Termination panels in a seismic cabinet” (page 196)
- “Multiservice Switch 7420 heat dissipation in a seismic cabinet” (page 197)
- “Multiservice Switch 7440 heat dissipation in a seismic cabinet” (page 197)
- “Multiservice Switch 7460 heat dissipation in a seismic cabinet” (page 197)
- “Multiservice Switch 7480 heat dissipation in a seismic cabinet” (page 198)
- “Grounding requirements for a seismic cabinet” (page 198)
- “Network equipment building standards (NEBS) compliances” (page 198)

Seismic cabinet dimensions and weights

The table “Seismic cabinet dimensions and weights” (page 194) summarizes the specifications when one or two devices are mounted in the cabinet.

Table 33
Seismic cabinet dimensions and weights

Equipment	Outside dimensions (height x width x depth)	Weight
Seismic cabinet, as shipped, and loaded on a hand-truck (including the pallet that is shipped with the cabinet)	210 cm x 90 cm (84 in. x 36 in.)	107 kg (244 lb).
Fully-configured cabinet with doors, 1 shelf assembly, cooling unit, air filter, cable management unit, 3 power supplies, 2 CPs, 14 FPs, and 14 termination panels (excluding cables)	197 cm x 60 cm x 79 cm (78 in. x 24 in. x 31 in.)	239.1 kg (526 lb)
Fully-configured cabinet with doors, 2 shelf assemblies, 2 cooling units, 2 air filter assemblies, 2 cable management units, 6 power supplies, 4 CPs, 28 FPs, and 28 termination panels (excluding cables)	197 cm x 60 cm x 79 cm (78 in. x 24 in. x 31 in.)	313.3 kg (689 lb)
Empty cabinet with doors	197 cm x 60 cm x 79 cm (78 in. x 24 in. x 31 in.)	87.7 kg (193 lb)

For information about the basic size of the seismic cabinet, see the figure “Seismic cabinet dimensions” (page 195).

Figure 58
Seismic cabinet dimensions

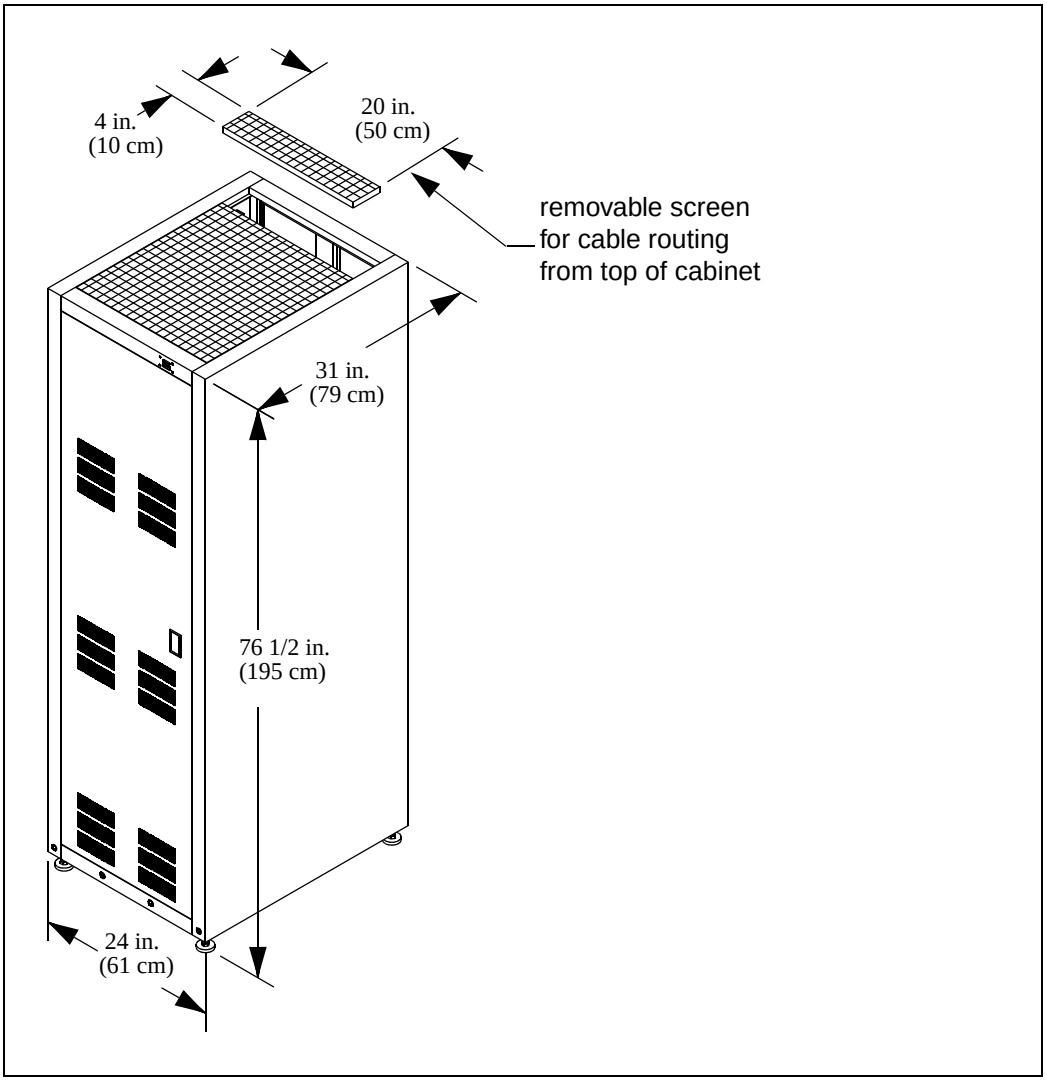

Configured cabinet weight

The weight of a seismic cabinet depends on the type, and the total number of devices, installed in the cabinet.

Table 34
Cabinet physical specifications

Device type	Maximum weight	Maximum number of devices per cabinet	Maximum weight	Gross weight of cabinet
Multiservice Switch 7480	81 kg (177 lb)	2	161 kg (354 lb)	256 kg (564 lb)
Multiservice Switch 7460	44.5 kg (98.1 lb)	4	178 kg (392.4 lb)	273 kg (601.9 lb)
Multiservice Switch 7440	39 kg (85.4 lb)	6	232.5 kg (512.4 lb)	328 kg (722.4 lb)
Multiservice Switch 7420	17 kg (37.4 lb)	10 (limited by weight of entire cabinet)	170 kg (374 lb)	265 kg (584 lb)
Note: Mounting holes on cabinet rails are spaced in the following repeating pattern: 5/8 in., 5/8 in., and 1/2 in. to comply with standard EIA-310-D dated September 1992.				

Termination panels in a seismic cabinet

A seismic cabinet configured with two fully populated shelves can house all of the termination panels needed for the function processors (FPs) in that cabinet, except for:

- the 8-port DS1 FP, which uses two termination panels per pack. If a full shelf of 8-port DS1 FPs is supported, some termination panels have to be moved to another cabinet.
- the DS1 MSA32 or E1 MSA32 FPs using RJ-45 termination panels. A maximum of three DS1 or E1 RJ-45 termination panels for each shelf can be mounted in the seismic cabinet. Other termination panels have to be moved to another cabinet.
- the DS1 MSA32 or E1 MSA32 FPs using 1-port/DB15 termination panels. A maximum of four DS1 or E1 1-port/DB15 termination panels for each shelf can be mounted in the seismic cabinet. Other termination panels have to be moved to another cabinet.
- the DS1 MSA32 or E1 MSA32 FPs using 2-port/DB15 termination panels. A maximum of five DS1 or E1 2-port/DB15 termination panels for each shelf can be mounted in the seismic cabinet. Other termination panels have to be moved to another cabinet.

- the E1 MSA32 FPs using unbalanced termination panels. A maximum of three DS1 or E1 unbalanced termination panels for each shelf can be mounted in the seismic cabinet. Other termination panels have to be moved to another cabinet.

In all cases when installing termination panels in a seismic cabinet with working shelves, the cable exit and air exhaust area of the shelves must be kept clear.

If you are housing termination panels in a separate seismic cabinet or 19-inch rack, leave at least 92 cm (36 in.) of space at the front and back of the cabinet for access.

Multiservice Switch 7420 heat dissipation in a seismic cabinet

The heat dissipation of a seismic cabinet configured with Nortel Networks Multiservice Switch 7420 is:

- per device: 1,307 BTUs/h
- maximum per cabinet: 13,070 BTUs/h

Multiservice Switch 7440 heat dissipation in a seismic cabinet

The heat dissipation of a seismic cabinet configured housing Nortel Networks Multiservice Switch 7440 is:

- per device: 1,802 BTUs/h
- maximum per cabinet: 12,812 BTUs/h

Multiservice Switch 7460 heat dissipation in a seismic cabinet

The heat dissipation of a seismic cabinet that is configured with a fully provisioned Nortel Networks Multiservice Switch 7460 (8 processor cards, 2 power supplies, and a cooling unit) is:

- per device: 2218.3 BTU s/h
- maximum per cabinet: 8873.3 BTU s/h

Multiservice Switch 7480 heat dissipation in a seismic cabinet

The heat dissipation of a seismic cabinet configured with Nortel Networks Multiservice Switch 7480 is:

- per device: 6,018 BTUs/h
- maximum per cabinet: 12,036 BTUs/h

Grounding requirements for a seismic cabinet

A seismic cabinet has grounding straps that you must attach to the mounting rails inside the cabinet. You must then connect these straps to a common grounding point at the base of the cabinet.

Network equipment building standards (NEBS) compliances

Nortel Networks Multiservice Switch seismic cabinets meet the Zone 4 seismic requirements of Telcordia NEBS GR-63-CORE, Issue 3 October 2002.

Chapter 10
Control processors

See these sections for information on control processors (CPs):

- “Control processor features” (page 199)
- “Control processor components” (page 200)
- “Control processor faceplates” (page 201)
- “BITS Termination panels” (page 204)
- “Ethernet 10BASE-T connector pinouts” (page 204)
- “V.24 connector pinouts” (page 204)
- “DS1 or E1 BITS connector pinouts” (page 205)
- “Line rate” (page 206)
- “Compliance with standards” (page 206)
- “Ethernet compliance with standards” (page 206)

Control processor features

A control processor (CP):

- can be one of two types: CP (NTNQ01) or CP-with-BITS (NTNQ03)
- sequences function processor (FP) start-up
- downloads new software onto FPs
- performs memory-intensive tasks for services delivered by FPs
- provides system timing for all other processors connected to the back plane, ensuring synchronous bus operation

- manages and monitors the status of FPs, the bus, and other hardware in the device
- monitors and processes alarms and the performance of real-time clocking
- interfaces with a network management system, a text interface device, or a modem which is used for network operator access, network monitoring, provisioning, and maintenance.

  A text interface device or modem connects directly to a port on the faceplate of a CP.

  Note: Connecting a modem requires a specific setup, as described in NN10600-175 *Nortel Networks Multiservice Switch 7400 Hardware Installation, Maintenance, and Upgrade*.

- provides Nortel Networks Multiservice Data Manager connectivity through a 10BASE-T Ethernet port, or alternatively, a V.24 DCE port.
- provides local access to the device through the V.24 DCE port (port 1). You can connect a VT100 terminal or any device that emulates a VT100 terminal to the CP and use this terminal to configure the device.
- provides sparing ability. When you install two CPs in a shelf, one is active and the other is on standby. If the active CP fails, the standby CP becomes active.

  Before setting up sparing between CPs, make sure all eight digits of the product equipment codes (PECs) for both CPs match. This ensures that both CPs have the same amount of memory and disk space.

  Note: See “Multiservice Switch part numbers” (page 511) for equivalent PECs. Except where noted, processor cards with equivalent PECs can be used as spares for each other.

Control processor components

The control processor (CP) consists of a processor module, an interface module, and a disk drive.

The processor module connects the CP to the device's backplane, providing an interface with the bus. It performs activities associated with bus and routing data through the device.

The CP shelf manager supports the following functions:

- disk interface
- stratum clock
- real-time clock
- shelf alarm circuitry
- V.24 DCE port providing Nortel Networks Multiservice Data Manager connectivity or local operator access (including through a modem)
- OAM 10BASE-T Ethernet port providing Multiservice Data Manager connectivity
- On the CP-with-BITS, a port providing interface for two external timing sources over E1s and DS1s

The CP hard disk drive stores Nortel Networks Multiservice Switch software, configuration data, and spooled information.

Control processor faceplates

These figures show the faceplates for the control processor (CP) and CP-with-BITS.

Figure 59
Control processor faceplate

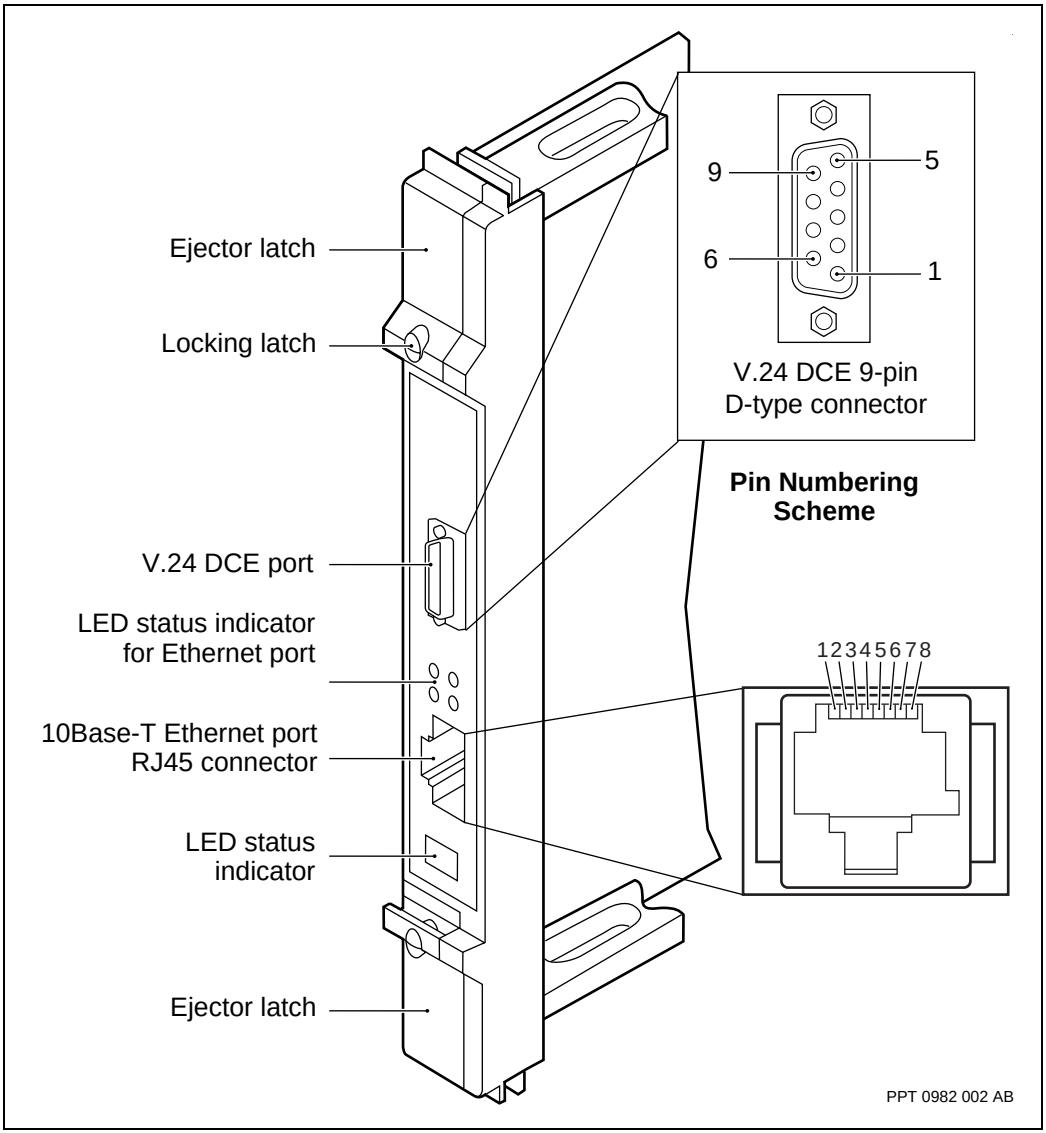

Figure 60
Control processor with BITS faceplate

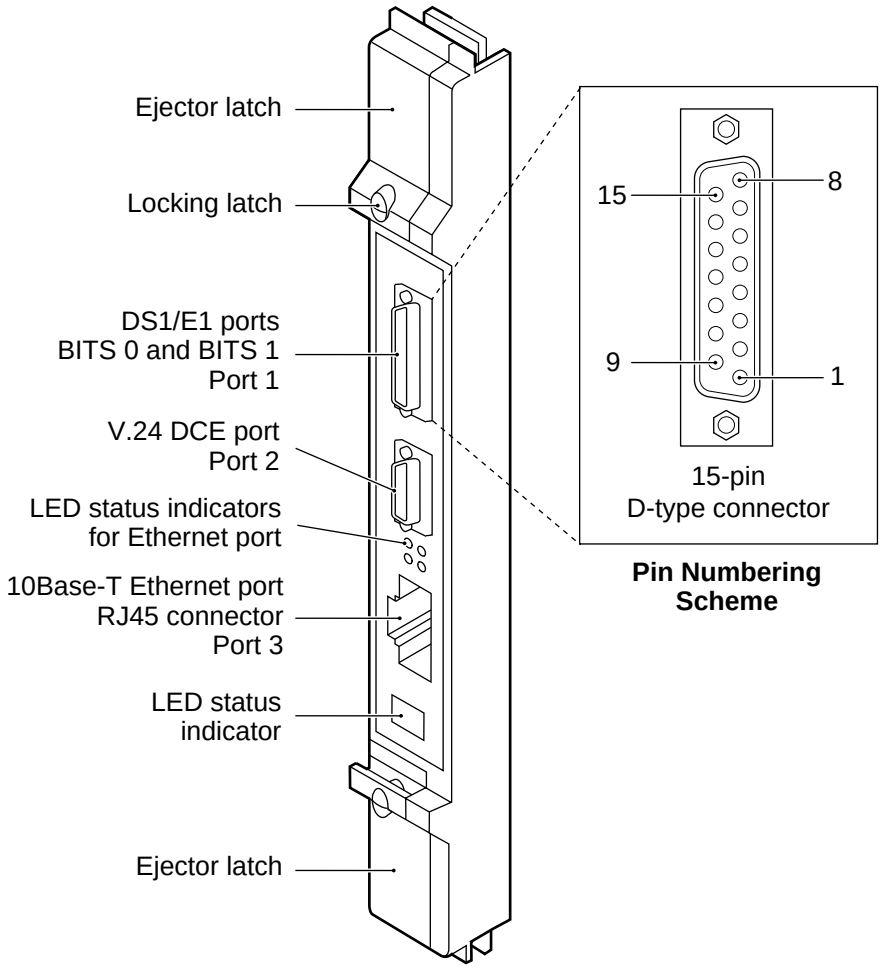

BITS Termination panels

The BITS termination panels (NTPS13) work together with the CP-with-BITS (NTNQ03) and BITS termination panel cables (NTPS18) to provide external timing functionality.

For more information see the section “BITS termination panel” (page 80)

Ethernet 10BASE-T connector pinouts

This table lists the connector pinouts for the control processor (CP) 10BASE-T Ethernet port.

Table 35
Ethernet 10BASE-T connector pinouts

Pin number	Signal name
1	Tx+
2	Tx-
3	Rx+
4	Not Used
5	Not Used
6	Rx-
7	Not Used
8	Not Used

V.24 connector pinouts

This table identifies the pinouts and signal names for the V.24 connector.

Table 36
V.24 connector pinout and signal names

Pin number	RS-232-C pin numbers	V.24 signal	ITU-T signal number	Direction on DCE port
1	15	TSET	114	OUTPUT
2	2	TXD	103	INPUT
3	3	RXD	104	OUTPUT
4	20	DTR	108	INPUT
5	7	GND	102	N/A
6	8	DCD(RSLD)	109	OUTPUT
7	4	RTS	105	INPUT
8	5	CTS(RFS)	106	OUTPUT
9	17	RSET	115	OUTPUT

DS1 or E1 BITS connector pinouts

Table 37
BITS interface connector pinout and signal names

Pin number	Signal name
7	BIT A Receive +
14	BIT A Receive -
2	BIT B Receive +
10	BIT B Receive -
11	Signal ground
4	+3.3V
5	Signal ground
12	Frame ground

Line rate

The control processor's line rate supports asynchronous data transfer at 9.6 kbit/s.

See the section "Line rate, port configuration, and clocking" (page 49) for more information.

Compliance with standards

Each V.24 port supports a subset of CCITT V.24 standards and can accommodate most interface devices.

Ethernet compliance with standards

The Ethernet function processor complies with these standards and conventions:

- IEEE 802.3
- Digital/Intel/Xerox (DIX)

Chapter 11
DS1 function processors

Voice services are supported by the following DS1 function processors (FPs):

- “1-port DS1 voice function processor” (page 208)
- “1-port DS1 MVP-E function processor” (page 212)
- “4-port DS1 MVP-E” (page 216)

ATM services are supported by the following Nortel Networks Multiservice Switch E1 FPs:

- “3-port DS1 ATM function processor” (page 221)
- “4-port DS1 AAL1 function processor” (page 226)
- “8-port DS1 ATM function processor” (page 231)

Frame-based services are supported by the following Multiservice Switch E1 FPs:

- “4-port DS1 frame relay function processor” (page 238)
- “4-port DS1C function processor” (page 243)
- “8-port DS1 function processor” (page 248)

Multi-services access (MSA) is supported by the following Multiservice Switch DS1 FPs:

- “32-port DS1 MSA 1-slot function processors” (page 255)
- “32-port DS1 MSA 2-slot function processors” (page 277)

1-port DS1 voice function processor

See these sections for information about the DS1 voice function processor (FP):

- “1-port DS1 voice faceplate” (page 208)
- “1-port DS1 voice termination panels” (page 210)
- “1-port DS1 voice cable assembly” (page 210)
- “1-port DS1 voice pinouts” (page 210)

1-port DS1 voice faceplate

This figure shows the faceplate for the 1-port DS1 voice FP.

Figure 61
1-port DS1 voice faceplate

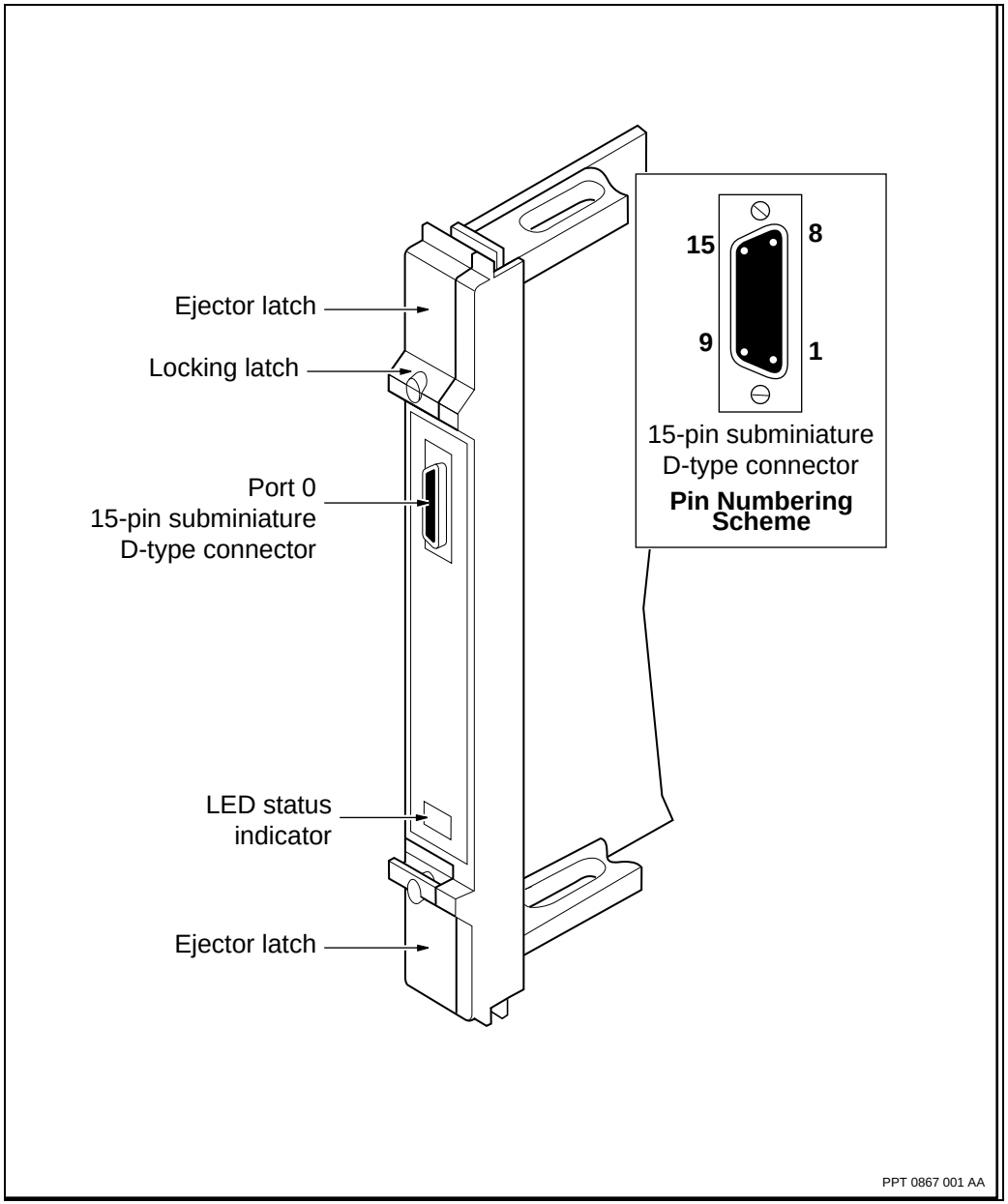

1-port DS1 voice termination panels

The 1-port DS1V FP uses the DS1 or E1 termination panel. This panel provides a break-out for customer-equipment connections so that each DS1V port has its own termination point and access. The termination panel also supports sparing.

For more information on the DS1or E1 termination panels, see “DS1 or E1 termination panels” (page 65).

1-port DS1 voice cable assembly

The maximum cable length for balanced DS1 lines to customer equipment is 340 m (1100 ft). The distance between the FP and the termination panel is part of the total length.

Table 38
1-port DS1 voice cable assembly parts

Qt.	Item	Description
	Belden 8107	shielded cable, 100 ohm, 7 twisted pairs, 24-gauge strand
2	NT A0380877	AMP 205206-3, connector housing,15-pin D-sub, male, tin plated, with grounding indents
12	NT A0291226	AMP 66506-3 pin for above, 20- to 24-gauge wire
2	NT A0361050	AMP 747099-3 straight hood kit, 15-pin D-sub
4	NT P0180927	0.112-40 x 0.5” pan-head machine screw
4	NT P0387666	0.115” spring washer

For more information, see “Cables” (page 89).

1-port DS1 voice pinouts

See these sections for information about specific connectors:

- “1-port DS1 voice connector P0 pinout and signal names” (page 211)
- “DS1 termination panel pinouts and signal names” (page 212)

Table 39
1-port DS1 voice connector P0 pinout and signal names

Pin number	Signal name
7	Receive +
8	Transmit +
14	Receive -
15	Transmit -
1	Protection switch register bit 0
9	Protection switch register bit 1
2	Protection switch register bit 2
10	Protection switch register bit 3
3	No connection
5	Signal ground
4	+12 V dc
11	Signal ground
12	Frame ground
6	Protection switch load
13	Protection switch status

Figure 62
DS1 termination panel pinouts and signal names

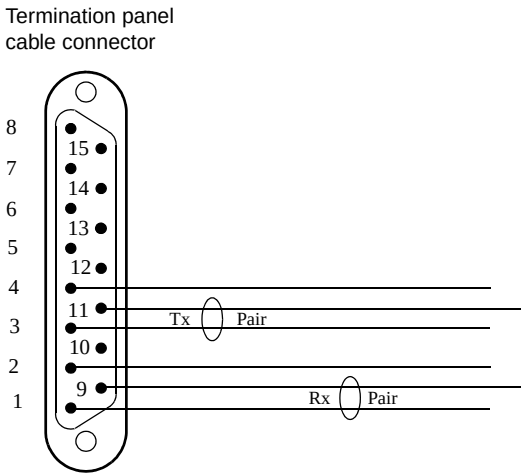

Pin	Name
1	Receive +
2	Frame Ground
3	Transmit +
4	Frame Ground
9	Receive -
11	Transmit -

1-port DS1 MVP-E function processor

See these sections for information about the DS1 Multipurpose Voice Platform enhanced echo cancellation (MVP-E) function processor (FP):

- “1-port DS1 MVP-E faceplate” (page 212)
- “1-port DS1 MVP-E termination panels” (page 213)
- “1-port DS1 MVP-E cable assembly” (page 214)
- “1-port DS1 MVP-E pinouts” (page 214)

1-port DS1 MVP-E faceplate

This figure shows a 1-port DS1 MVP-E faceplate.

Figure 63
1-port DS1 MVP-E faceplate

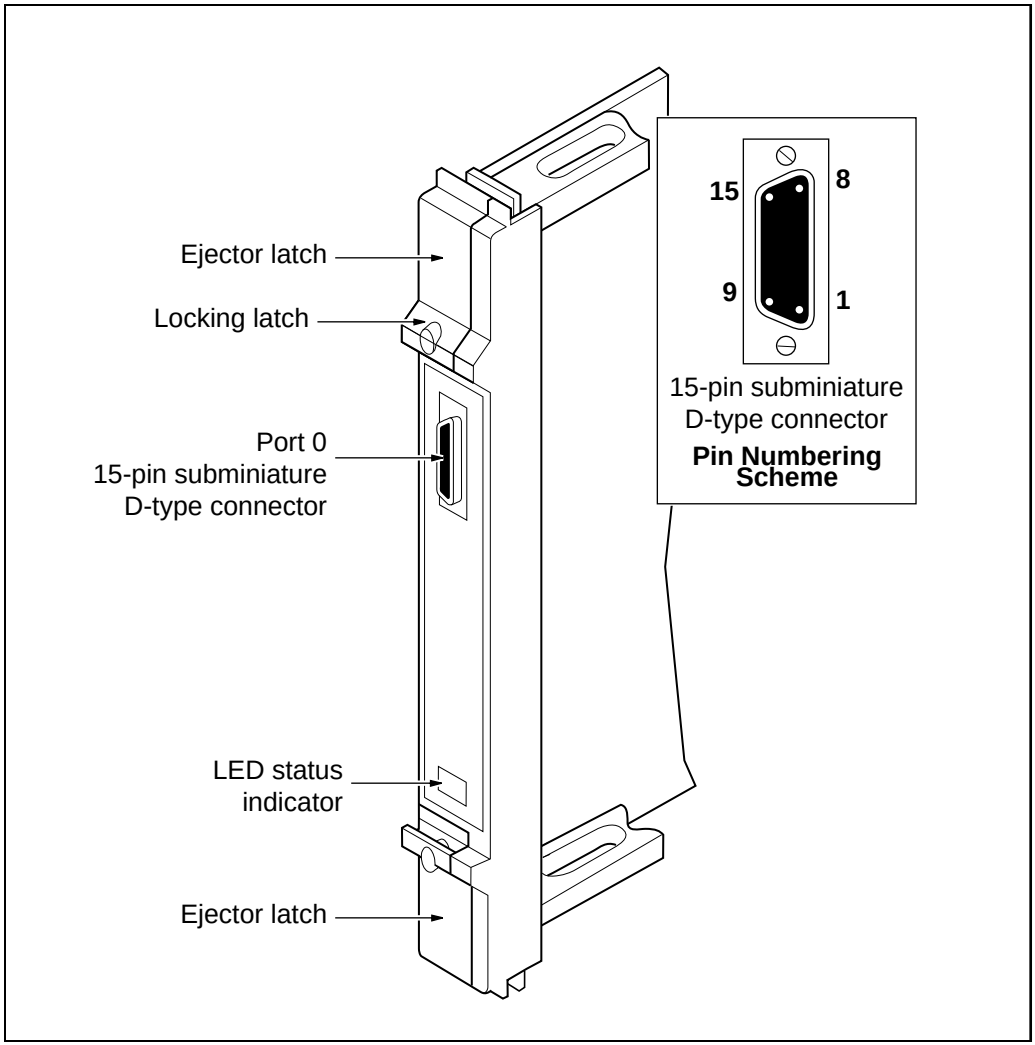

1-port DS1 MVP-E termination panels

The 1-port DS1 MVP-E FPs use the DS1 or E1 termination panels. These panels provide a break-out for customer-equipment connections so that each port has its own termination point and access. These termination panels also support sparing.

For more information about the DS1 or E1 termination panels, see “DS1 or E1 termination panels” (page 65).

1-port DS1 MVP-E cable assembly

The maximum cable length for balanced DS1 lines to customer equipment is 340 m (1100 ft). The distance between the FP and the termination panel is part of the total length.

Table 40
1-port DS1 MVP-E cable assembly parts

Qty	Item	Description
	Belden 8106	Cable, 100 ohm, 6 twisted pairs, 24-gauge strand
2	NT A0380877	AMP 205206-3, connector housing, 15-pin D-sub, male, tin plated, with grounding indents
26	NT A0291226	AMP 66506-3 pin for above, 20- to 24-gauge wire
2	NT A0361050	AMP 747099-3 straight hood kit, 15-pin D-sub
4	NT P0180927	0.112-40 x 0.5” pan-head machine screw
4	NT P0387666	0.115” spring washer

For more information, see “Cables” (page 89).

1-port DS1 MVP-E pinouts

See these sections for information about specific connectors:

- “1-port DS1 MVP-E connector P0 pinout and signal names” (page 214)
- “DS1 termination panel pinouts and signal names” (page 216)

Table 41
1-port DS1 MVP-E connector P0 pinout and signal names

Pin number	Signal name
7	Receive +
8	Transmit +
(Sheet 1 of 2)	

Table 41 (continued)
1-port DS1 MVP-E connector P0 pinout and signal names

Pin number	Signal name
14	Receive -
15	Transmit -
1	Protection switch register bit 0
9	Protection switch register bit 1
2	Protection switch register bit 2
10	Protection switch register bit 3
3	No connection
5	Signal ground
4	+12 V dc
11	Signal ground
12	Frame ground
6	Protection switch load
13	Protection switch status

(Sheet 2 of 2)

Figure 64
DS1 termination panel pinouts and signal names

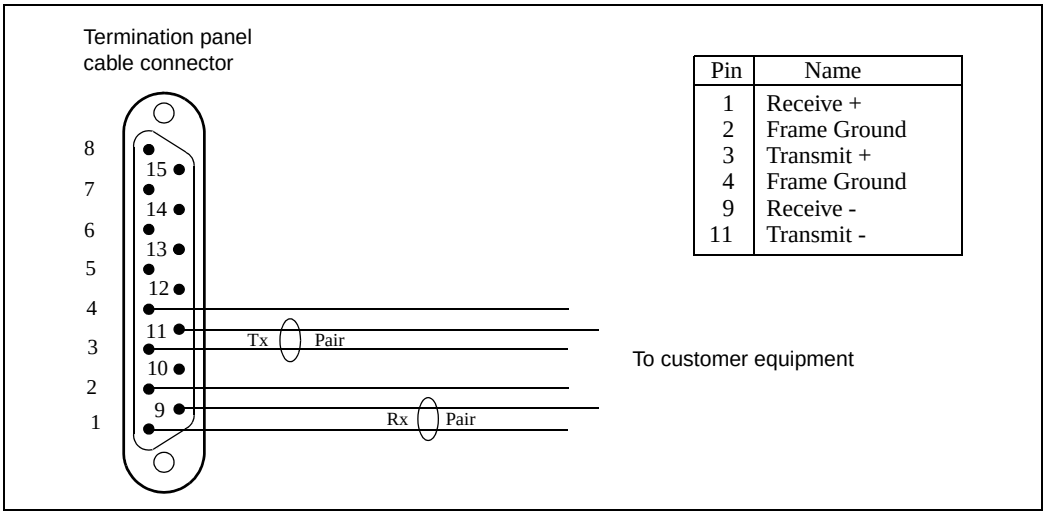

Pin	Name
1	Receive +
2	Frame Ground
3	Transmit +
4	Frame Ground
9	Receive -
11	Transmit -

4-port DS1 MVP-E

See these sections for information about the 4-port DS1 Multipurpose Voice Platform with enhanced echo cancellation (MVP-E) function processor (FP):

- “4-port DS1 MVP-E faceplate” (page 216)
- “4-port DS1 MVP-E termination panels” (page 217)
- “4-port DS1 MVP-E cable assembly” (page 218)
- “4-port DS1 MVP-E pinouts” (page 218)

4-port DS1 MVP-E faceplate

You can use the monitor ports (MON 0 and MON 1) to connect to test equipment and test the card while it is in service. It carries a -26 dB tap of the transmit (Tx) connector signal. The 9-pin subminiature D-type connector provides one-for-one sparing capability.

This figure shows the faceplate for the 4-port DS1 MVP-E FP.

Figure 65
4-port DS1 MVP-E faceplate

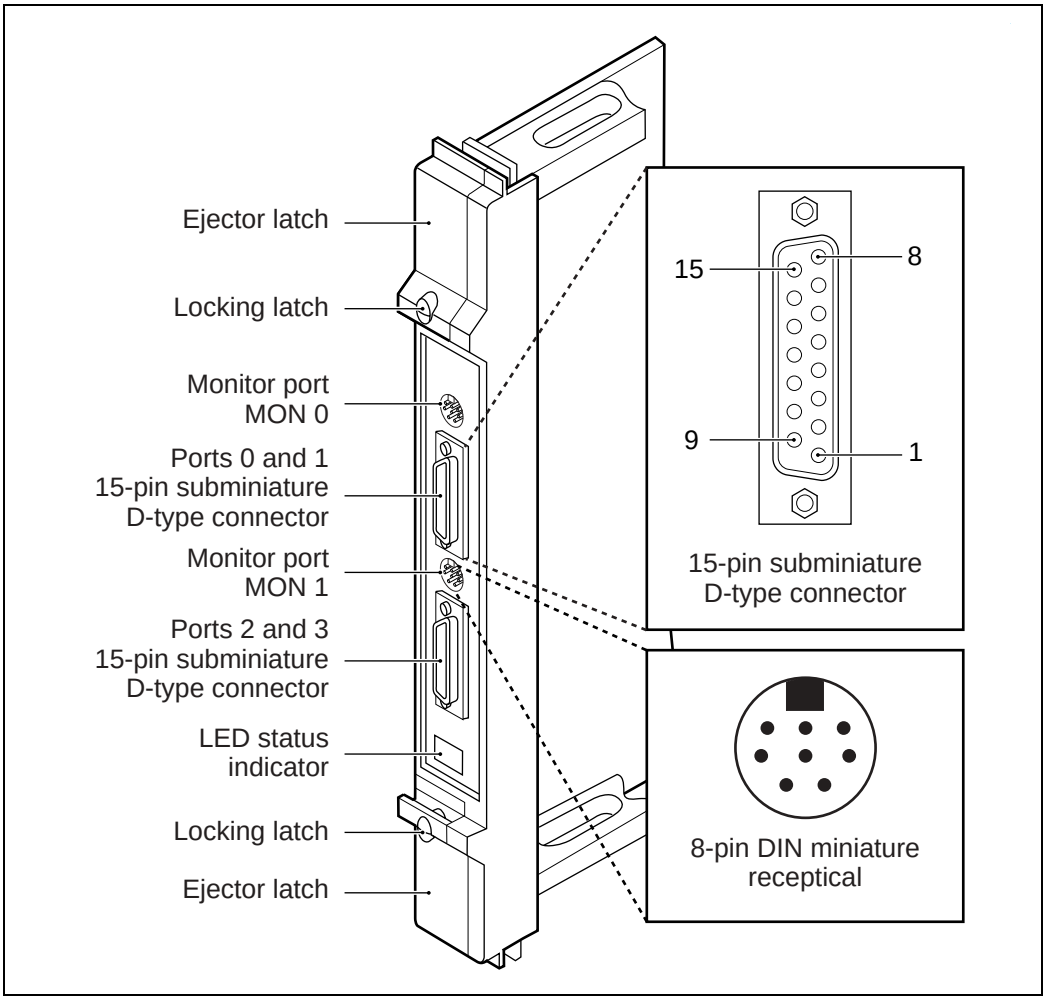

4-port DS1 MVP-E termination panels

The 4-port DS1 MVP-E FPs use the DS1 or E1 termination panels. This panel provides a break-out for customer-equipment connections so that each port has its own termination point and access. The termination panels supports sparing.

For more information about the DS1 or E1 termination panels, see “DS1 or E1 termination panels” (page 65).

4-port DS1 MVP-E cable assembly

The maximum cable length for balanced DS1 lines to customer equipment is 340 m (1100 ft). The distance between the FP and the termination panel is part of the total length.

Table 42
4-port DS1 MVP-E cable assembly parts

Qty	Item	Description
	Belden 8106	cable, 100 ohm, 6 twisted pairs, 24-gauge strand
2	NT A0380877	AMP 205206-3, connector housing, 15-pin D-sub, male, tin plated, with grounding indents
26	NT A0291226	AMP 66506-3 pin for above, 20- to 24-gauge wire
2	NT A0361050	AMP 747099-3 straight hood kit, 15-pin D-sub
4	NT P0180927	0.112-40 x 0.5” pan-head machine screw
4	NT P0387666	0.115” spring washer

For more information, see “Cables” on page 89.

4-port DS1 MVP-E pinouts

See the following for information about specific connectors:

- “4-port DS1 connector P0 pinout and signal names” (page 219)
- “4-port DS1 connector P1 pinout and signal names” on page 219
- “4-port DS1 MVP-E faceplate monitor pinout and signal names” (page 220)
- “DS1 termination panel pinouts and signal names” (page 216)

Table 43
4-port DS1 connector P0 pinout and signal names

Pin number	Signal name
8	Port 0, Transmit +
15	Port 0, Transmit -
7	Port 0, Receive +
14	Port 0, Receive -
1	Port 1, Transmit +
9	Port 1, Transmit -
2	Port 1, Receive +
10	Port 1, Receive -
6	Protection Switch Load
13	Protection Switch Status
3	No connection
11	Signal Ground
4	+12 V dc
5	Signal ground
12	No connection

Table 44
4-port DS1 connector P1 pinout and signal names

Pin number	Signal name
8	Port 2, Transmit +
15	Port 2, Transmit -
7	Port 2, Receive +
14	Port 2, Receive -
1	Port 3, Transmit +
(Sheet 1 of 2)	

Table 44 (continued)
4-port DS1 connector P1 pinout and signal names

Pin number	Signal name
9	Port 3, Transmit -
2	Port 3, Receive +
10	Port 3, Receive -
6	Protection Switch Load
13	Protection Switch Status
3	No connection
11	Signal ground
4	+12 V dc
5	Signal ground
12	No connections
(Sheet 2 of 2)	

Figure 66
4-port DS1 MVP-E faceplate monitor pinout and signal names

Monitor port connector

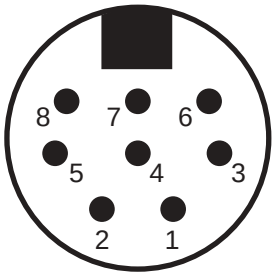

Pin	Name
1	Port n: Transmit +
2	Port n: Transmit -
3	Port n: Receive +
4	Port n: Receive -
5	Port n+1: Trasmit +
6	Port n+1: Transmit -
7	Port n+1: Receive +
8	Port n+1: Receive -

PPT 3068 001 AA

Figure 67
DS1 termination panel pinouts and signal names

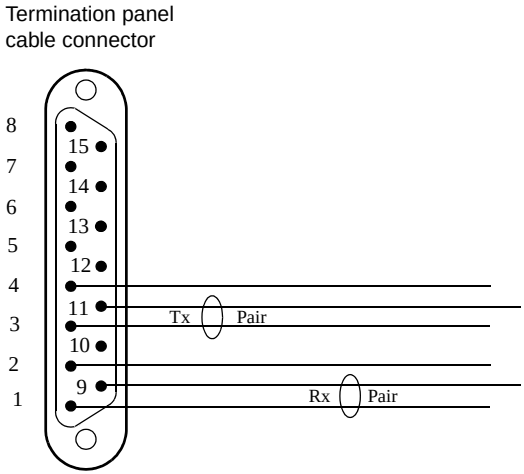

Pin	Name
1	Receive +
2	Frame Ground
3	Transmit +
4	Frame Ground
9	Receive -
11	Transmit -

3-port DS1 ATM function processor

See these sections for information about the 3-port DS1 ATM function processor (FP):

- “3-port DS1 ATM faceplate” (page 221)
- “3-port DS1 ATM termination panels” (page 222)
- “3-port DS1 ATM cable assembly” (page 223)
- “3-port DS1 ATM pinouts” (page 223)

3-port DS1 ATM faceplate

This figure shows the faceplate for the 3-port DS1 ATM FP.

Figure 68
3-port DS1 ATM faceplate

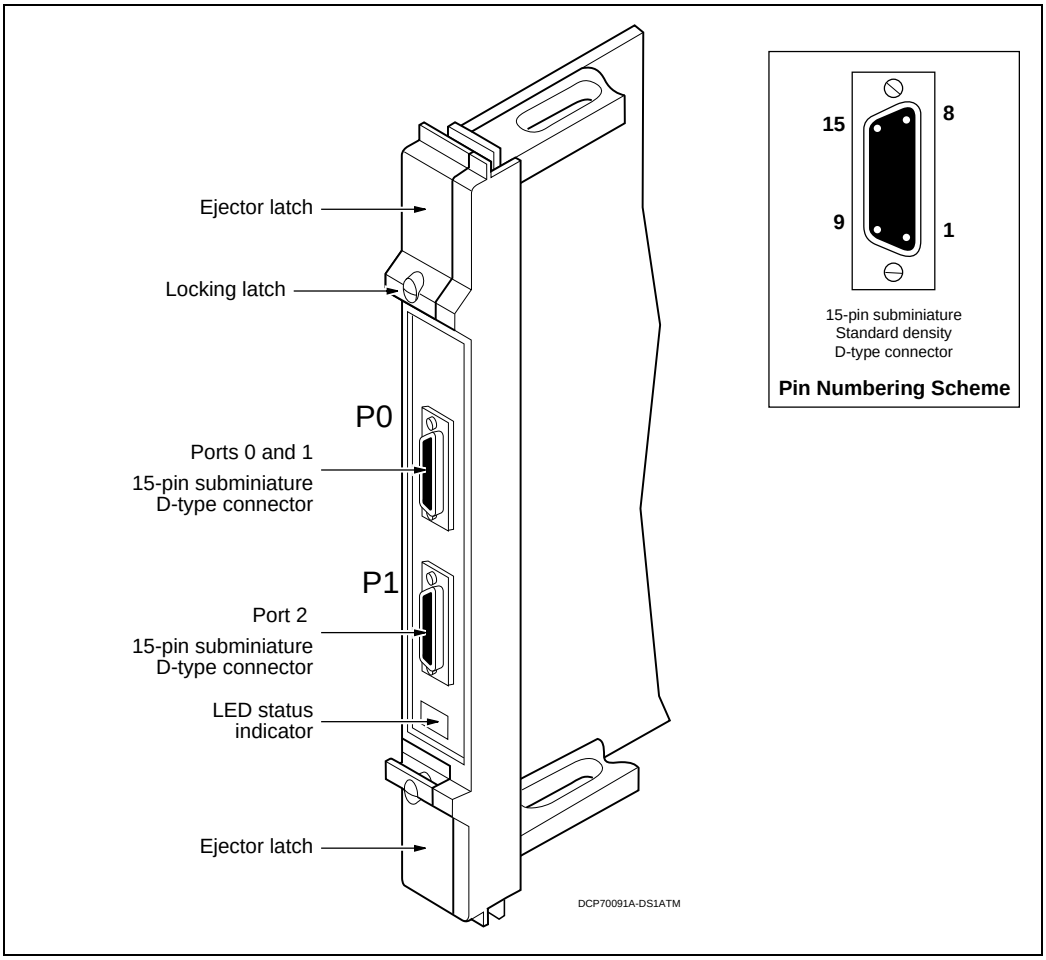

3-port DS1 ATM termination panels

The 3-port DS1 ATM FP uses the DS1 or E1 termination panel. This panel provides a break-out for customer-equipment connections so that each DS1 ATM port has its own termination point and access. The DS1 or E1 termination panel supports sparing.

Before setting up sparing, check the seventh and eighth digits of the product codes of the main and spare FPs. If the digits are CA, you can only spare that FP with FPs of the same or later vintage. Earlier vintages (for example, AA and BB) can be spared with each other. The PEC is located on the faceplate of the FP.

For more information about the DS1 or E1 termination panels, see “DS1 or E1 termination panels” (page 65).

3-port DS1 ATM cable assembly

The maximum cable length for DS1 ATM lines to customer equipment is 340 m (1100 ft). The distance between the FP and the termination panel is part of the total length.

Table 45
3-port DS1 cable assembly parts

Qty	Item	Description
	Belden 8107	shielded cable, 100 ohm, 7 twisted pairs, 24-gauge (0.51 mm) strand
2	NT A0380877	AMP 205206-3, connector housing, 15-pin D-sub, male, tin plated, with grounding indents
12	NT A0291226	AMP 66506-3 pin for above, 20- to 24-gauge (0.81 to 0.51 mm) wire
2	NT A0361050	AMP 747099-3 straight hood kit, 15-pin D-sub
4	NT P0180927	0.112-40 x 0.5” pan head machine screw
4	NT P0387666	0.115” spring washer

For more information, see “Cables” (page 89).

3-port DS1 ATM pinouts

See these sections for information about specific connectors:

- “3-port DS1 ATM connector P0 pinout and signal names” (page 224)
- “3-port DS1 ATM connector P1 pinout and signal names” (page 224)
- “DS1 termination panel pinouts and signal names” (page 225)

Table 46
3-port DS1 ATM connector P0 pinout and signal names

Pin number	Signal name
8	Port 0, Transmit +
15	Port 0, Transmit -
7	Port 0, Receive +
14	Port 0, Receive -
1	Port 1, Transmit +
9	Port 1, Transmit -
2	Port 1, Receive +
10	Port 1, Receive -
6	Protection Switch Register Bit 0
13	Protection Switch Register Bit 1
3	Protection Switch Register Bit 2
11	Protection Switch Register Bit 3
4	No connection
5	Signal ground
12	Frame ground

Table 47
3-port DS1 ATM connector P1 pinout and signal names

Pin number	Signal name
8	Port 2, Transmit +
15	Port 2, Transmit -
7	Port 2, Receive +
14	Port 2, Receive -
1	No connection
(Sheet 1 of 2)	

Table 47 (continued)
3-port DS1 ATM connector P1 pinout and signal names

Pin number	Signal name
9	No connection
2	No connection
10	No connection
6	Protection Switch Load
13	Protection Switch Status
3	No connection
11	Signal ground
4	+12 V dc
5	Signal ground
12	Frame ground
(Sheet 2 of 2)	

Figure 69
DS1 termination panel pinouts and signal names

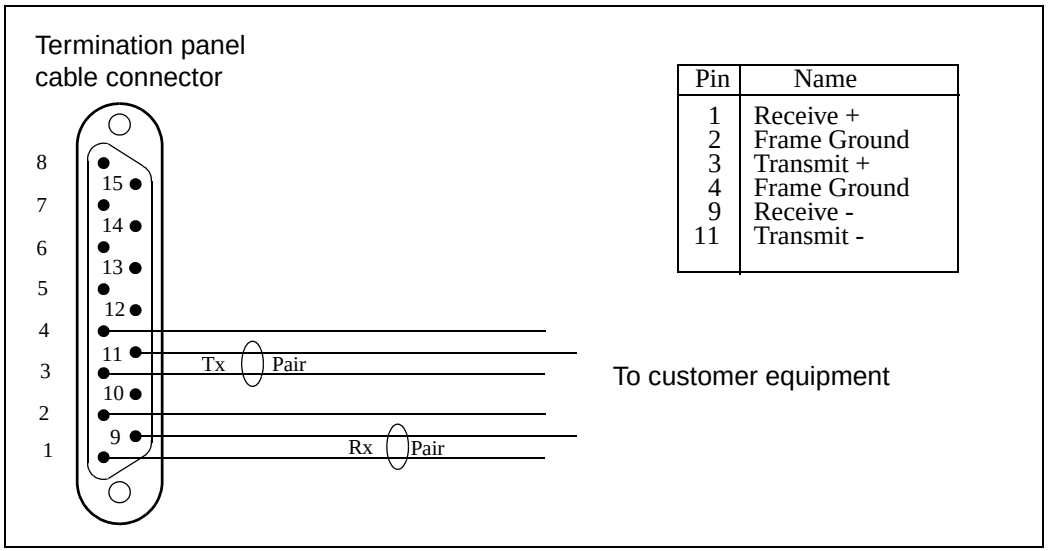

Pin	Name
1	Receive +
2	Frame Ground
3	Transmit +
4	Frame Ground
9	Receive -
11	Transmit -

4-port DS1 AAL1 function processor

See these sections for information about the DS1 AAL1 function processor (FP):

- “4-port DS1 AAL1 faceplate” (page 226)
- “4-port DS1 AAL1 termination panels” (page 228)
- “4-port DS1 AAL1 cable assembly” (page 228)
- “4-port DS1 AAL1 pinouts” (page 229)

4-port DS1 AAL1 faceplate

This figure shows the faceplate for the 4-port DS1 AAL1 FP.

Figure 70
4-port DS1 AAL1 faceplate and connectors

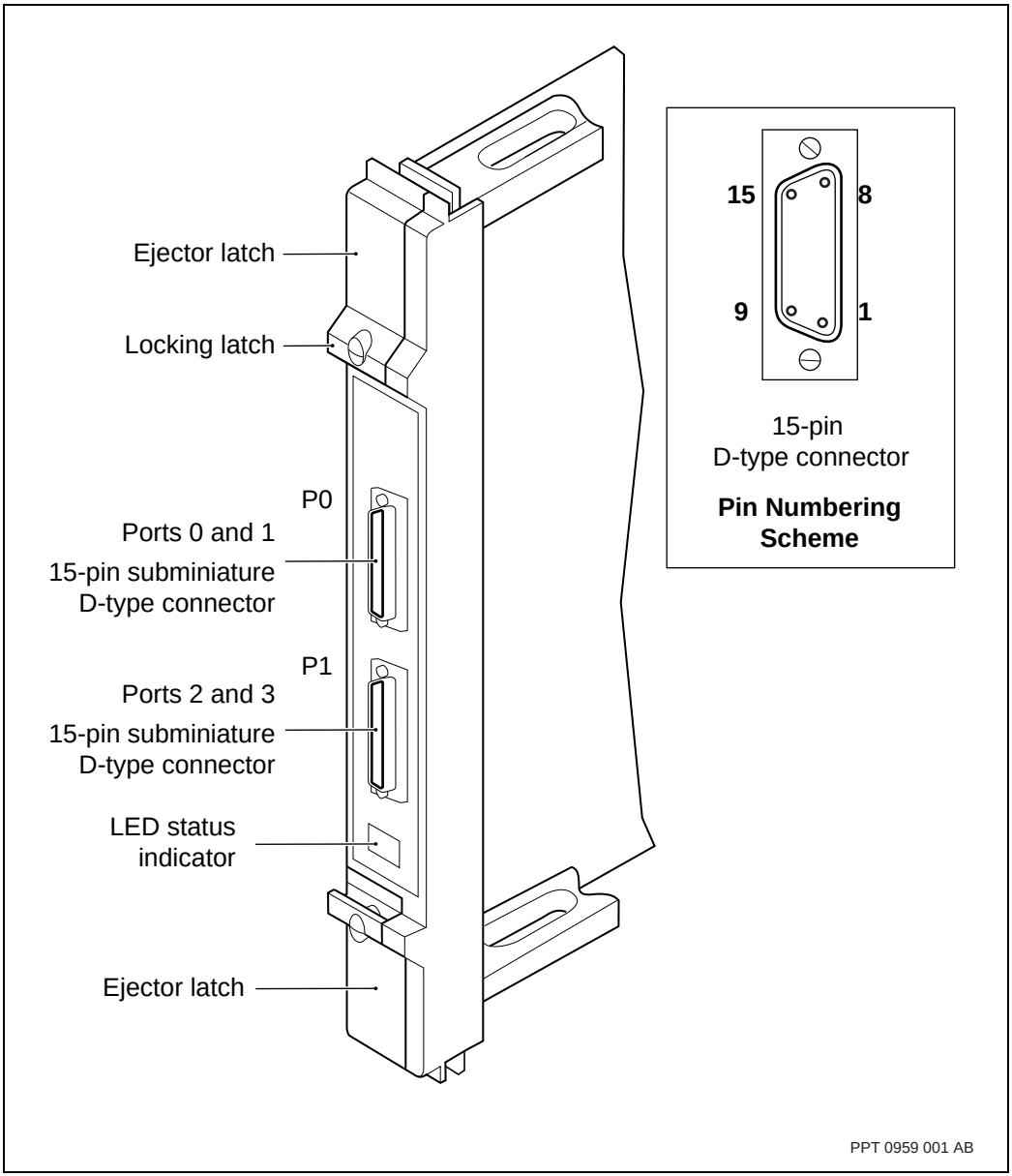

4-port DS1 AAL1 termination panels

The 4-port DS1 AAL1 FP uses the DS1 or E1 termination panels. These termination panels provide a break-out for customer-equipment connections so that each DS1 AAL1 port has its own termination point and access. The DS1 or E1 termination panel supports one-for-one sparing.

Before setting up sparing, check the seventh and eighth digits of the product equipment codes (PECs) of the main and spare FPs. If the digits are BA, you can only spare that FP with FPs of the same or later vintage. Earlier vintages (for example, AA and AC) can be spared with each other. The PEC is located on the faceplate of the FP.

For more information about termination panels, see “DS1 or E1 termination panels” (page 65).

4-port DS1 AAL1 cable assembly

The maximum cable length for DS1 AAL1 lines to customer equipment is 340 m (1100 ft). This length applies to multi-pair 24-gauge (0.51-mm) cable containing an overall outer shield. The distance between the FP and the termination panel is part of the total length.

Table 48
Recommended cable assembly parts for DS1 AAL1 lines

Toy	Item	Description
	Belden 8107	Shielded cable, 100 ohm, 7 twisted pairs, 24-gauge (0.51 mm) strand
1	NT A0380877	AMP 205206-3, connector housing, 15-pin D-sub, male, tin plated, with grounding indents
6	NT A0291226	AMP 66506-3 pin for above, 20- to 24-gauge (0.81 to 0.51 mm) wire
1	NT A0361050	AMP 747099-3 straight hood kit, 15-pin D-sub
2	NT P0180927	0.112-40 x 0.5 in. pan head machine screw
2	NT P0387666	0.115 in. spring washer

For more information about cables, see “Cables” (page 89).

4-port DS1 AAL1 pinouts

See these sections for information about specific connectors:

- "4-port DS1 AAL1 FP connector P0 pinout and signal names" (page 229)
- "4-port DS1 AAL1 FP connector P1 pinout and signal names" (page 230)
- "DS1 AAL1 termination panel connector pinout and signal names" (page 231)

Table 49
4-port DS1 AAL1 FP connector P0 pinout and signal names

Pin number	Signal name
8	Port 0, Transmit +
15	Port 0, Transmit -
7	Port 0, Receive +
14	Port 0, Receive -
1	Port 1, Transmit +
9	Port 1, Transmit -
2	Port 1, Receive +
10	Port 1, Receive -
6	Protection Switch Register Bit 0
13	Protection Switch Register Bit 1
3	Protection Switch Register Bit 2
11	Protection Switch Register Bit 3
4	No connection
5	Signal ground
12	Frame ground

Table 50
4-port DS1 AAL1 FP connector P1 pinout and signal names

Pin number	Signal name
8	Port 2, Transmit +
15	Port 2, Transmit -
7	Port 2, Receive +
14	Port 2, Receive -
1	Port 3 Transmit +
9	Port 3 Transmit -
2	Port 3 Receive +
10	Port 3 Receive -
6	Protection Switch Load
13	Protection Switch Status
5	Signal ground
3	+5V dc
11	Signal ground
4	+12 V dc
12	Frame ground

Figure 71
DS1 AAL1 termination panel connector pinout and signal names

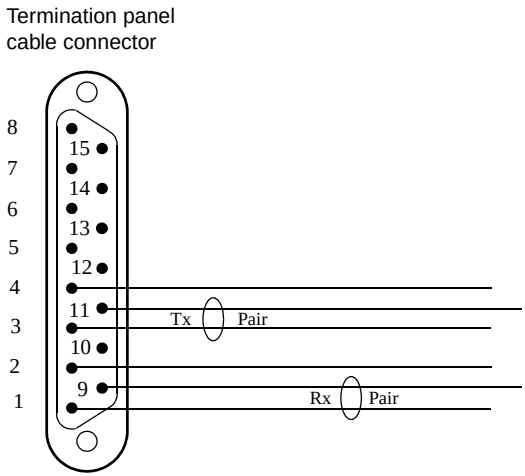

Pin	Name
1	Receive +
2	Frame Ground
3	Transmit +
4	Frame Ground
9	Receive -
11	Transmit -

8-port DS1 ATM function processor

See these sections for information about the 8-port DS1 ATM function processor (FP):

- “8-port DS1 ATM faceplate” (page 231)
- “8-port DS1 ATM termination panels” (page 233)
- “8-port DS1 ATM cable assembly” (page 233)
- “8-port DS1 ATM pinouts” (page 234)

8-port DS1 ATM faceplate

The following figure shows the 8-port DS1 ATM faceplate and connectors.

Figure 72
8-port DS1 ATM faceplate and connectors

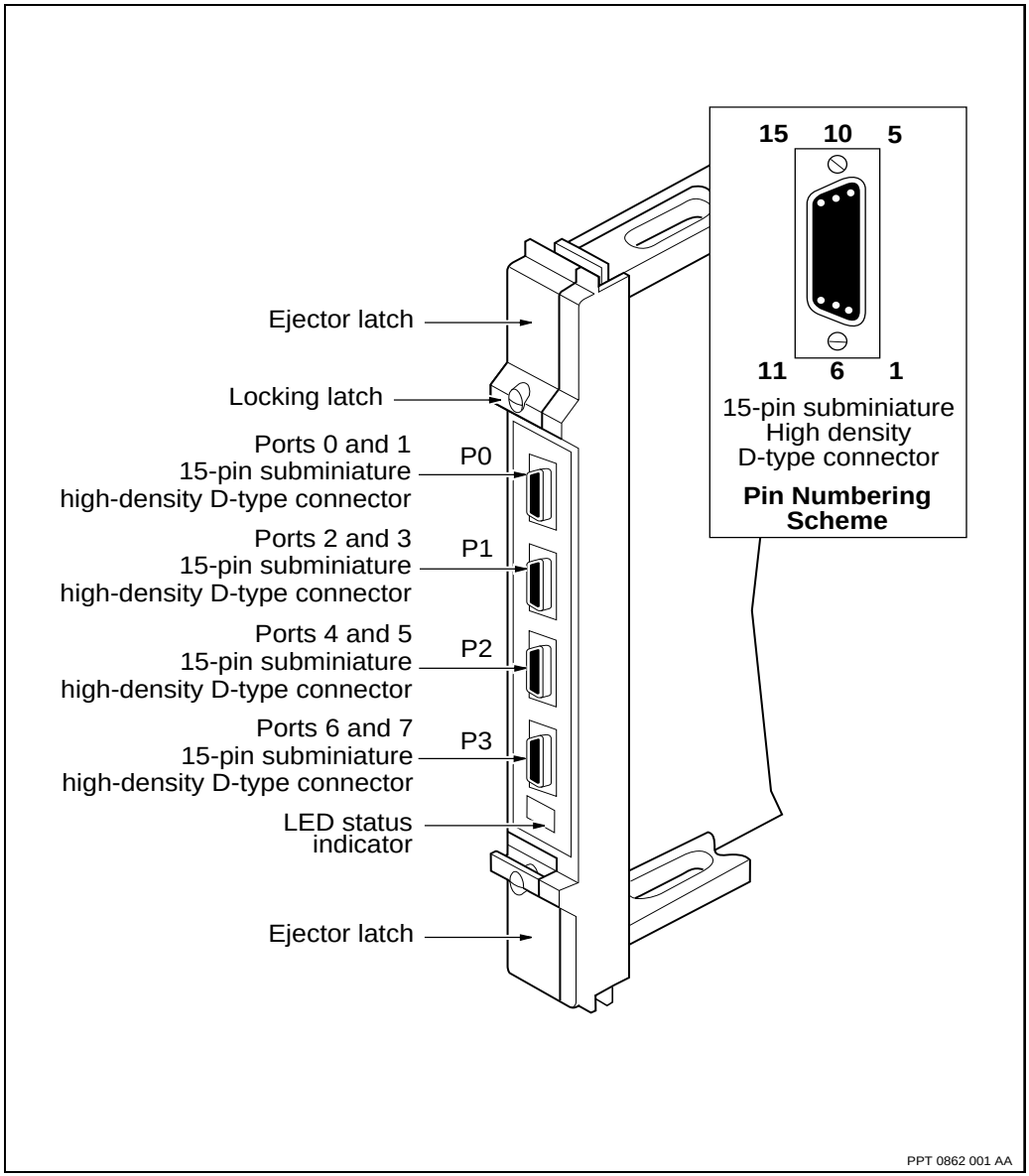

8-port DS1 ATM termination panels

The 8-port DS1 ATM FP uses one or two DS1 or E1 termination panels. These panels provide a break-out for customer-equipment connections so that each DS1 ATM port has its own termination point and access. The DS1 or E1 termination panels support sparing.

One termination panel provides one-for-one sparing for up to four ports. You can spare ports 0–3, and 4–7. For example, a sparing configuration with three ports can use ports 0, 2, and 3, but not ports 0, 2, and 7. Only provision ports that you are going to use. To spare more than four ports, use two DS1 termination panels.

Before setting up sparing, check the seventh and eighth digits of the PECs of the main and spare FPs. If the digits are CA, you can only spare that FP with FPs of the same or later vintage. Earlier vintages (for example, AA and BB) can be spared with each other. The PEC is located on the faceplate of the FP.

For more information about the DS1 or E1 termination panels, see “DS1 or E1 termination panels” (page 65).

8-port DS1 ATM cable assembly

The maximum cable length for DS1 ATM lines to customer equipment is 340 m (1100 ft). The distance between the FP and the termination panel is part of the total length.

Table 51
8-port DS1 ATM cable assembly parts

Qty	Item	Description
	Belden 8107	shielded cable, 100 ohm, 7 twisted pairs, 24-gauge (0.51 mm) strand
2	NT A0380877	AMP 205206-3, connector housing,15-pin D-sub, male, tin plated, with grounding indents
12	NT A0291226	AMP 66506-3 pin for above, 20- to 24-gauge (0.82 to 0.51) wire
2	NT A0361050	AMP 747099-3 straight hood kit, 15-pin D-sub
4	NT P0180927	0.112-40 x 0.5” pan head machine screw
4	NT P0387666	0.115” spring washer

For more information, see “Cables” (page 89).

8-port DS1 ATM pinouts

See these sections for information about specific connectors:

- “8-port DS1 ATM connector P0 pinout and signal names” (page 234)
- “8-port DS1 ATM connector P1 pinout and signal names” (page 235)
- “8-port DS1 ATM connector P2 pinout and signal names” (page 235)
- “8-port DS1 ATM connector P3 pinout and signal names” (page 236)
- “DS1 termination panel pinouts and signal names” (page 237)

Table 52
8-port DS1 ATM connector P0 pinout and signal names

Pin number	Signal name
8	Port 0, Transmit +
15	Port 0, Transmit -
7	Port 0, Receive +
14	Port 0, Receive -
1	Port 1, Transmit +
9	Port 1, Transmit -
2	Port 1, Receive +
10	Port 1, Receive -
6	Protection Switch Register Bit 0
13	Protection Switch Register Bit 1
3	Protection Switch Register Bit 2
11	Protection Switch Register Bit 3
4	No connection
5	Signal ground
12	Frame ground

Table 53
8-port DS1 ATM connector P1 pinout and signal names

Pin number	Signal name
8	Port 2, Transmit +
15	Port 2, Transmit -
7	Port 2, Receive +
14	Port 2, Receive -
1	Port 3, Transmit +
9	Port 3, Transmit -
2	Port 3, Receive +
10	Port 3, Receive -
6	Protection Switch Load
13	Protection Switch Status
3	No connection
11	Signal ground
4	+12 V dc
5	Signal ground
12	Frame ground

Table 54
8-port DS1 ATM connector P2 pinout and signal names

Pin number	Signal name
8	Port 4, Transmit +
15	Port 4, Transmit -
7	Port 4, Receive +
14	Port 4, Receive -
1	Port 5, Transmit +
(Sheet 1 of 2)	

Table 54 (continued)
8-port DS1 ATM connector P2 pinout and signal names

Pin number	Signal name
9	Port 5, Transmit -
2	Port 5, Receive +
10	Port 5, Receive -
6	Protection Switch Register Bit 0
13	Protection Switch Register Bit 1
3	Protection Switch Register Bit 2
11	Protection Switch Register Bit 3
4	No connection
5	Signal ground
12	Frame ground
Shield	Frame ground
(Sheet 2 of 2)	

Table 55
8-port DS1 ATM connector P3 pinout and signal names

Pin number	Signal name
8	Port 6, Transmit +
15	Port 6, Transmit -
7	Port 6, Receive +
14	Port 6, Receive -
1	Port 7, Transmit +
9	Port 7, Transmit -
2	Port 7, Receive +
10	Port 7, Receive -
6	Protection Switch Load
13	Protection Switch Status
(Sheet 1 of 2)	

Table 55 (continued)
8-port DS1 ATM connector P3 pinout and signal names

Pin number	Signal name
3	No connection
11	Signal ground
4	+12 V dc
5	Signal ground
12	Frame ground
Shield	Frame ground
(Sheet 2 of 2)	

Figure 73
DS1 termination panel pinouts and signal names

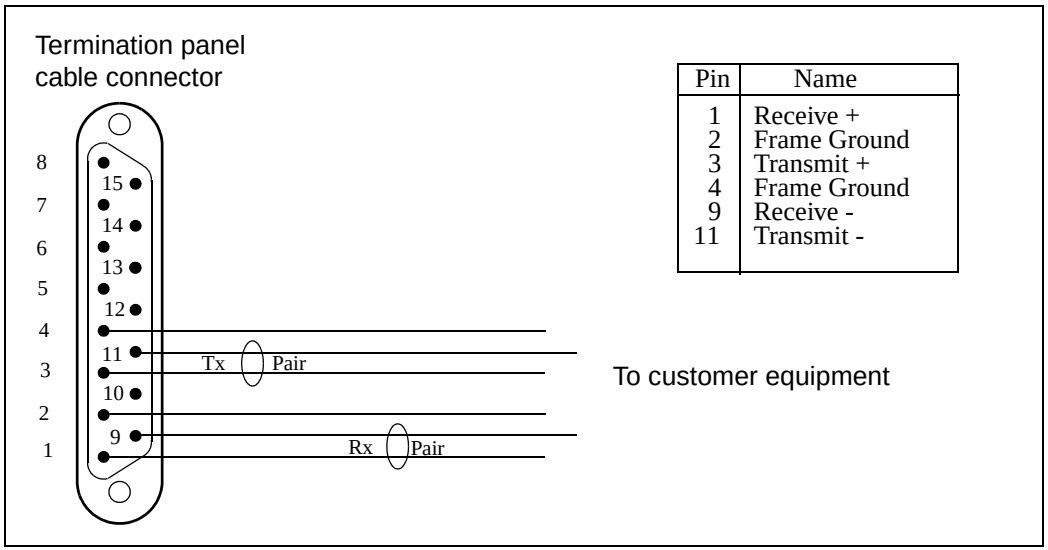

Pin	Name
1	Receive +
2	Frame Ground
3	Transmit +
4	Frame Ground
9	Receive -
11	Transmit -

4-port DS1 frame relay function processor

See these sections for information about the 4-port DS1 function processor (FP):

- “4-port DS1 frame relay faceplate” (page 238)
- “4-port DS1 frame relay termination panels” (page 240)
- “4-port DS1 frame relay cable assembly” (page 240)
- “4-port DS1 frame relay pinouts” (page 240)

4-port DS1 frame relay faceplate

This figure shows the faceplate for the 4-port DS1 frame relay FP.

Figure 74
4-port DS1 frame relay faceplate

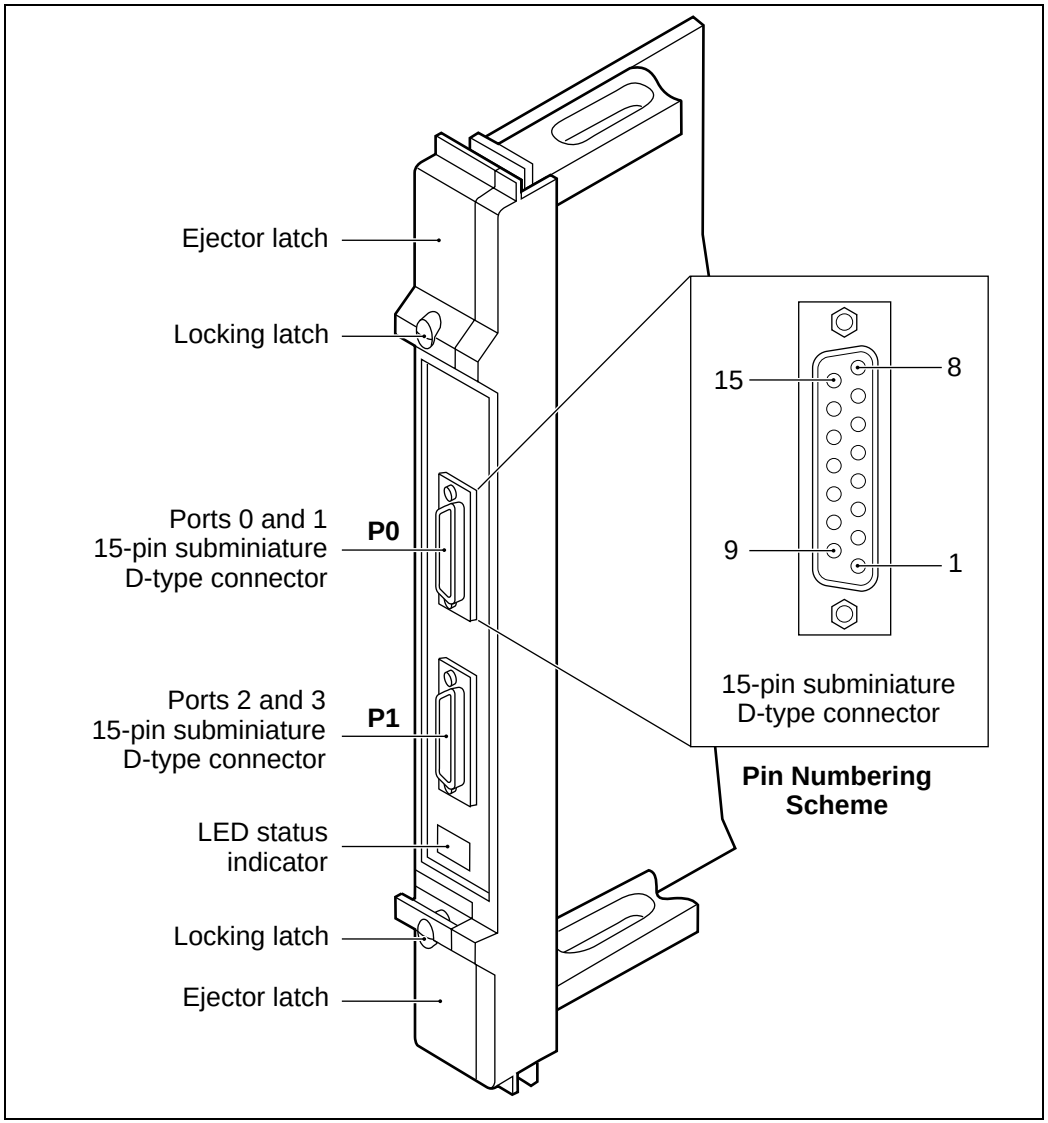

4-port DS1 frame relay termination panels

The 4-port DS1 FP uses the DS1 or E1 termination panel. This panel provides a break-out for customer equipment connections so that each DS1 port has its own termination point and access. The DS1 or E1 termination panels support sparing.

Before setting up sparing, check the product equipment codes (PECs) on the faceplates of both the active and spare FPs. The first six digits (four letters and two numbers) of the PECs must match.

For more information about the DS1 or E1 termination panels, see “DS1 or E1 termination panels” (page 65).

4-port DS1 frame relay cable assembly

The maximum cable length for DS1 lines to customer equipment is 340 m (1100 ft). The distance between the FP and the termination panel is part of the total length.

Table 56
4-port DS1 cable assembly parts

Qty	Item	Description
	Belden 8107	shielded cable, 100 ohm, 7 twisted pair, 24-gauge (0.51 mm) strand
2	NT A0380877	AMP 205206-3, connector housing, 15-pin D-sub, male, tin plated, with grounding indents
12	NT A0291226	AMP 66506-3 pin for above, 20- to 24-gauge (0.81 to 0.51 mm) wire
2	NT A0361050	AMP 747099-3 straight hood kit, 15-pin D-sub
4	NT P0180927	0.112-40 x 0.5” pan head machine screw
4	NT P0387666	0.115” spring washer

For more information about cables, see “Cables” (page 89)

4-port DS1 frame relay pinouts

See these sections for information on specific connectors:

- “4-port DS1 connector P0 pinout and signal names” (page 241)

- “4-port DS1 connector P1 pinout and signal names” (page 241)
- “DS1 termination panel pinout and signal names” (page 242)

Table 57
4-port DS1 connector P0 pinout and signal names

Pin number	Signal name
8	Port 0, Transmit +
15	Port 0, Transmit -
7	Port 0, Receive +
14	Port 0, Receive -
1	Port 1, Transmit +
9	Port 1, Transmit -
2	Port 1, Receive +
10	Port 1, Receive -
6	Protection Switch Register Bit 0
13	Protection Switch Register Bit 1
3	Protection Switch Register Bit 2
11	Protection Switch Register Bit 3
4	No connection
5	Signal ground
12	Frame ground

Table 58
4-port DS1 connector P1 pinout and signal names

Pin number	Signal name
8	Port 2, Transmit +
15	Port 2, Transmit -
7	Port 2, Receive +
(Sheet 1 of 2)	

Table 58 (continued)
4-port DS1 connector P1 pinout and signal names

Pin number	Signal name
14	Port 2, Receive -
1	Port 3, Transmit +
9	Port 3, Transmit -
2	Port 3, Receive +
10	Port 3, Receive -
6	Protection Switch Load
13	Protection Switch Status
3	No connection
11	Signal ground
4	+12 V dc
5	Signal ground
12	Frame ground
(Sheet 2 of 2)	

Figure 75
DS1 termination panel pinout and signal names

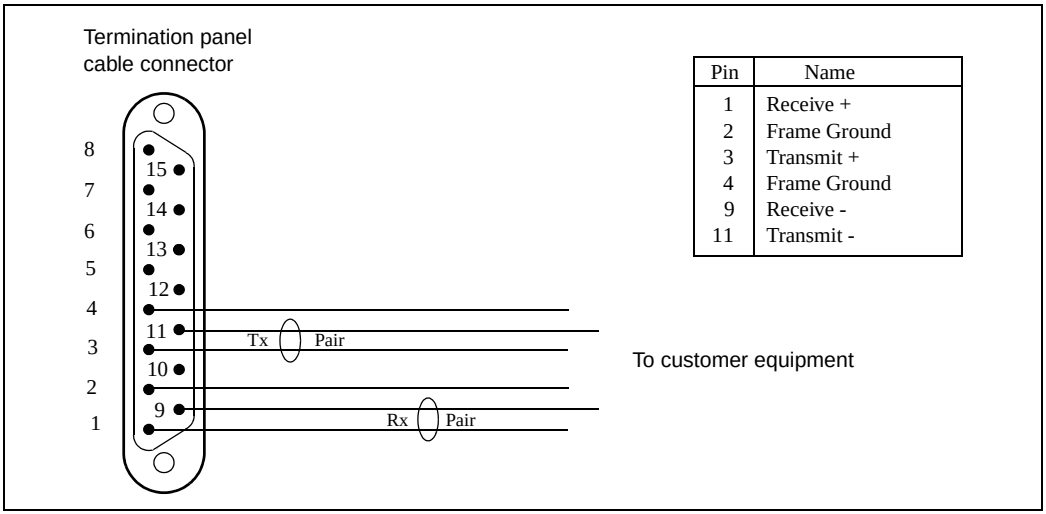

Pin	Name
1	Receive +
2	Frame Ground
3	Transmit +
4	Frame Ground
9	Receive -
11	Transmit -

4-port DS1C function processor

See these sections for information about the 4-port DS1C function processor (FP):

- “4-port DS1C faceplate” (page 243)
- “4-port DS1C termination panels” (page 245)
- “4-port DS1C cable assembly” (page 245)
- “4-port DS1C pinouts” (page 245)

4-port DS1C faceplate

This figure shows the faceplate for the 4-port DS1C FP.

Figure 76
4-port DS1C faceplate

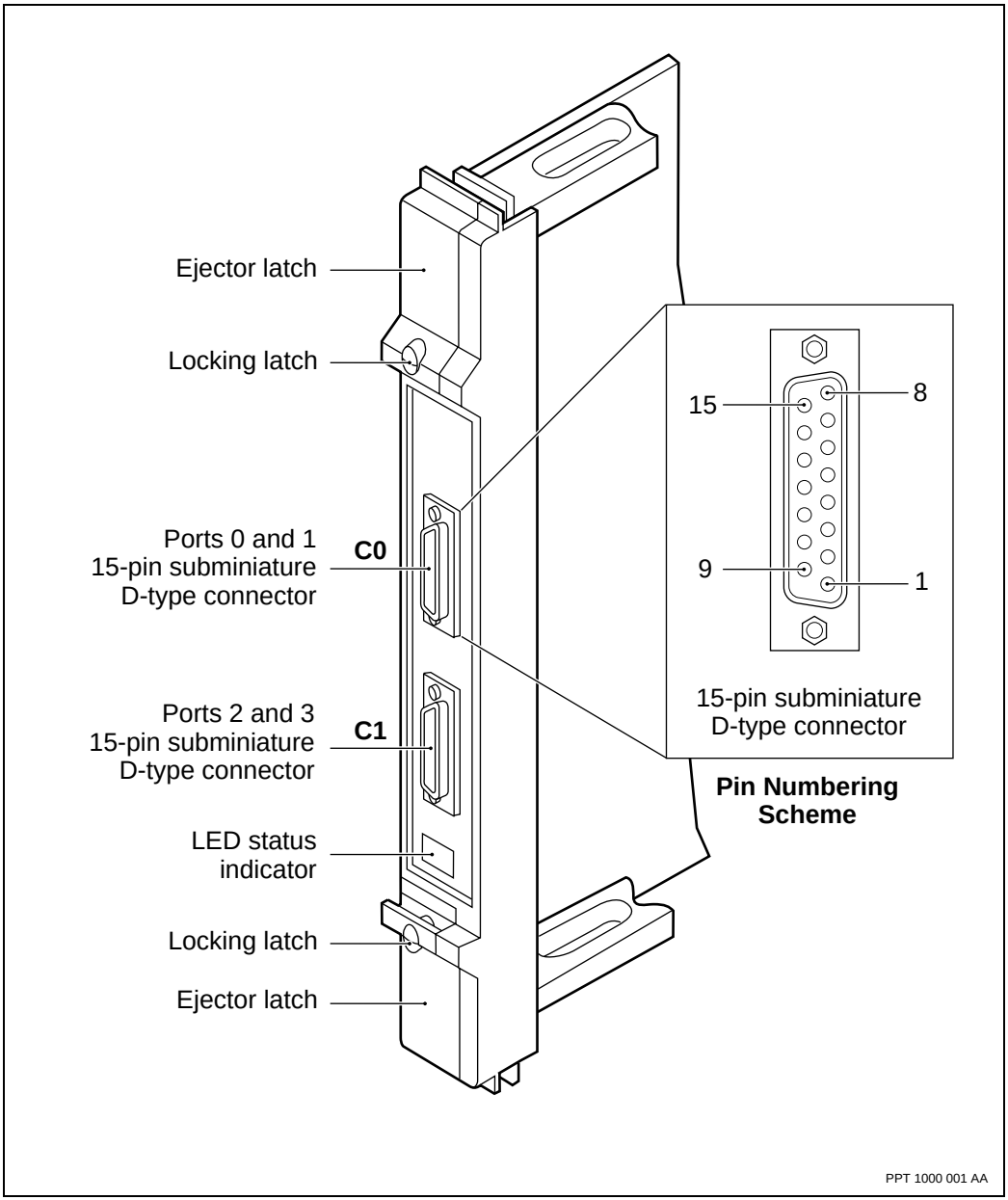

4-port DS1C termination panels

The 4-port DS1C FP uses the DS1 or E1 termination panels. These panels provide a break-out for customer-equipment connections so that each DS1C port has its own termination point and access. The DS1 or E1 termination panels support sparing.

Before setting up sparing, check the product equipment codes (PECs) on the faceplates of both the active and spare FPs. The first six digits (four letters and two numbers) of the PECs must match.

For more information about the DS1 or E1 termination panels, see “DS1 or E1 termination panels” (page 65).

4-port DS1C cable assembly

The maximum cable length for DS1 lines to customer equipment is 340 m (1100 ft). The distance between the FP and the termination panel is part of the total length.

Table 59
4-port DS1C cable assembly parts

Qty	Item	Description
	Belden 8107	Shielded cable, 100 ohm, 7 twisted pairs, 24hgauge (0.51 mm) strand
2	NT A0380877	AMP 205206-3, connector housing,15-pin D-sub, male, tin plated, grounding indents
12	NT A0291226	AMP 66506-3, pins for above, 20- to 24- gauge (0.81 to 0.51 mm) wire
2	NT A0361050	AMP 747099-3 straight hood kit, 15-pin D-sub
4	NT P0180927	0.112-40 x 0.5” pan head machine screw
4	NT P0387666	0.115” spring washer

For more information, see “Cables” (page 89).

4-port DS1C pinouts

See these sections for information about specific connectors:

- “4-port DS1C connector C0 pinout and signal names” (page 246)

- “4-port DS1C connector C1 pinout and signal names” (page 246)
- “DS1 termination panel pinouts and signal names” (page 248)

Table 60
4-port DS1C connector C0 pinout and signal names

Pin number	Signal name
8	Port 0, Transmit +
15	Port 0, Transmit -
7	Port 0, Receive +
14	Port 0, Receive -
1	Port 1, Transmit +
9	Port 1, Transmit -
2	Port 1, Receive +
10	Port 1, Receive -
6	Protection Switch Register Bit 0
13	Protection Switch Register Bit 1
3	Protection Switch Register Bit 2
11	Protection Switch Register Bit 3
4	No connection
5	Signal ground
12	Frame ground

Table 61
4-port DS1C connector C1 pinout and signal names

Pin number	Signal name
8	Port 2, Transmit +
15	Port 2, Transmit -
7	Port 2, Receive +
(Sheet 1 of 2)	

Table 61 (continued)
4-port DS1C connector C1 pinout and signal names

Pin number	Signal name
14	Port 2, Receive -
1	Port 3, Transmit +
9	Port 3, Transmit -
2	Port 3, Receive +
10	Port 3, Receive -
6	Protection Switch Load
13	Protection Switch Status
3	No connection
11	Signal ground
4	+12 V dc
5	Signal ground
12	Frame ground
(Sheet 2 of 2)	

Figure 77
DS1 termination panel pinouts and signal names

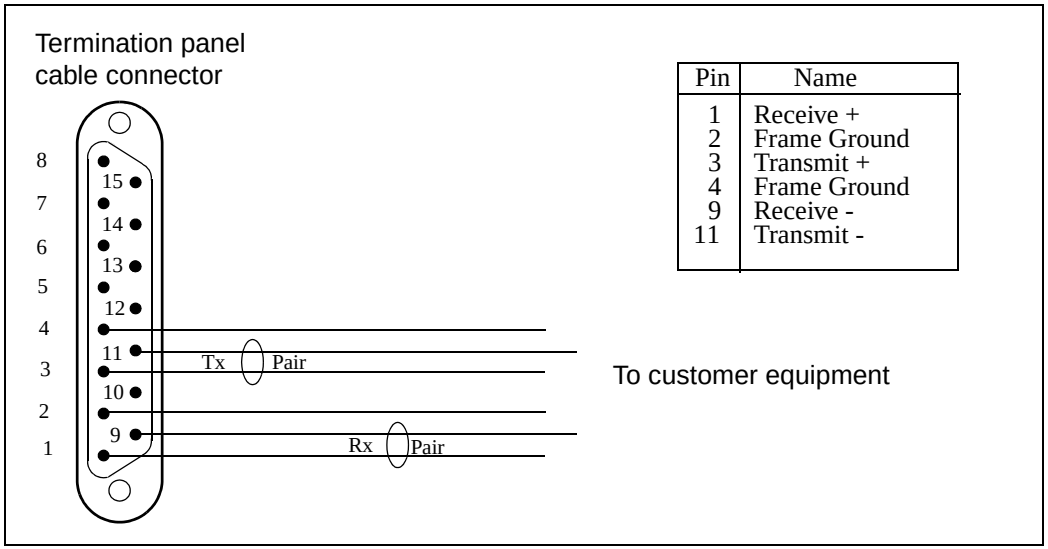

Pin	Name
1	Receive +
2	Frame Ground
3	Transmit +
4	Frame Ground
9	Receive -
11	Transmit -

8-port DS1 function processor

See these sections for information about the 8-port DS1 function processor (FP):

- “8-port DS1 faceplate” (page 248)
- “8-port DS1 termination panel” (page 250)
- “8-port DS1 cable assembly” (page 250)
- “8-port DS1 pinouts” (page 250)

8-port DS1 faceplate

This figure shows the faceplate for the 8-port DS1 FP.

Figure 78
8-port DS1 faceplate

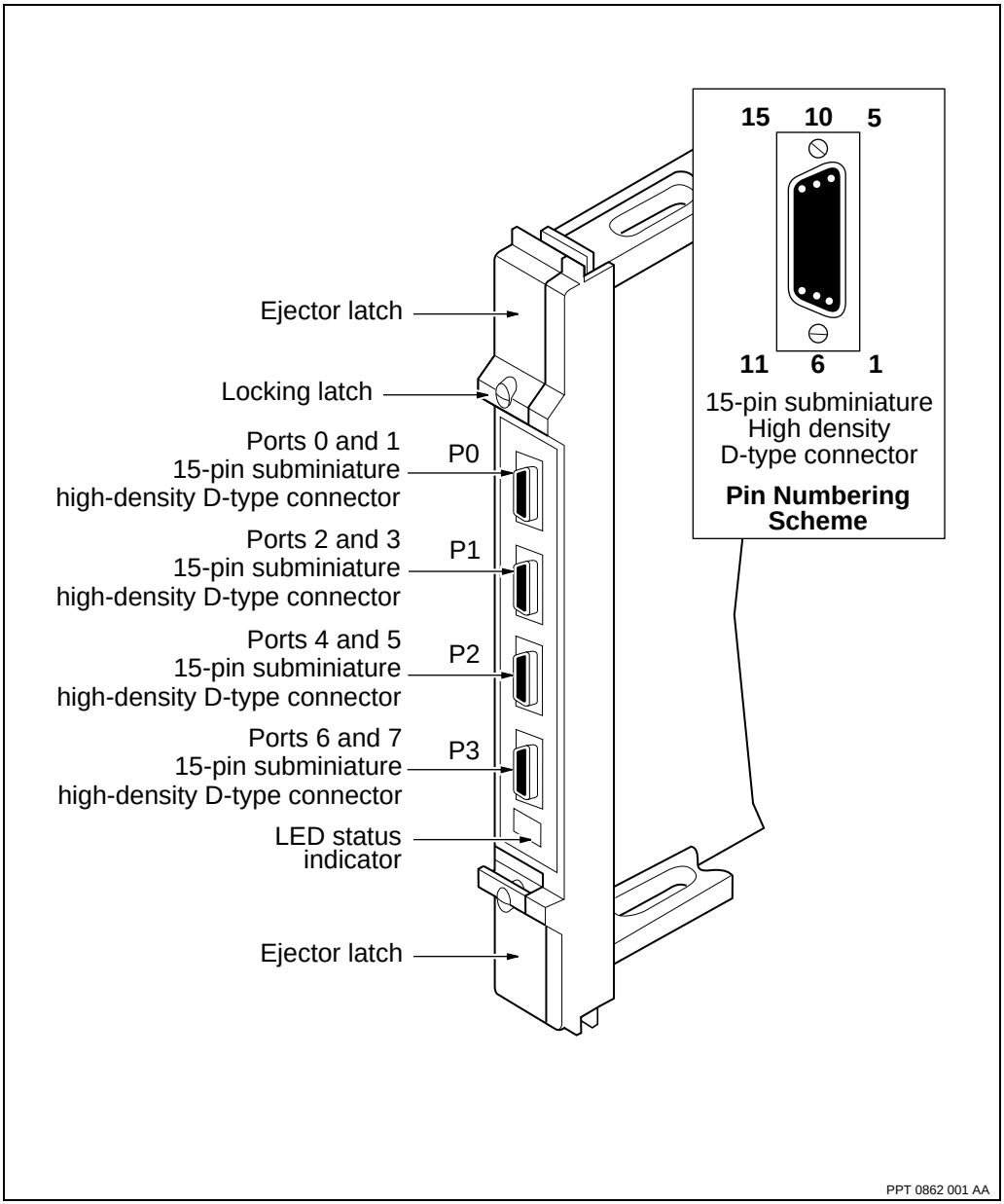

8-port DS1 termination panel

The 8-port DS1 FP uses the DS/E1 termination panels. These termination panels provide a break-out for customer equipment connections so that each DS1 port has its own termination point and access. The DS1 or E1 termination panels support sparing.

Before setting up sparing, check the product equipment codes (PECs) on the faceplates of both the active and spare FPs. The first six digits (four letters and two numbers) of the PECs must match.

For more information about termination panels, see “DS1 or E1 termination panels” (page 65).

8-port DS1 cable assembly

The maximum cable length for DS1 lines to customer equipment is 340 m (1100 ft). The distance between the FP and the termination panel is part of the total length.

Table 62
8-port DS1 cable assembly parts

Qty	Item	Description
	Belden 8107	Shielded cable, 100 ohm, 7 twisted pairs, 24-gauge (0.51 mm) strand
2	NT A0380877	AMP 205206-3, connector housing,15-pin D-sub, male, tin plated, with grounding indents
12	NT A0291226	AMP 66506-3 pin for above, 20- to 24-gauge (0.81 to 0.51 mm) wire
2	NT A0361050	AMP 747099-3 straight hood kit, 15-pin D-sub
4	NT P0180927	0.112-40 x 0.5” pan head machine screw
4	NT P0387666	0.115” spring washer

For more information on cables, see “Cables” (page 89).

8-port DS1 pinouts

See these sections for information about specific connectors:

- “8-port DS1 connector P0 pinout and signal names” (page 251)

- “8-port DS1 connector P1 pinout and signal names” (page 252)
- “8-port DS1 connector P2 pinout and signal names” (page 252)
- “8-port DS1 connector P3 pinout and signal names” (page 253)
- “DS1 termination panel pinouts and signal names” (page 254)

Table 63
8-port DS1 connector P0 pinout and signal names

Pin number	Signal name
8	Port 0, Transmit +
15	Port 0, Transmit -
7	Port 0, Receive +
14	Port 0, Receive -
1	Port 1, Transmit +
9	Port 1, Transmit -
2	Port 1, Receive +
10	Port 1, Receive -
6	Protection Switch Register Bit 0
13	Protection Switch Register Bit 1
3	Protection Switch Register Bit 2
11	Protection Switch Register Bit 3
4	No connection
5	Signal ground
12	Frame ground

Table 64
8-port DS1 connector P1 pinout and signal names

Pin number	Signal name
8	Port 2, Transmit +
15	Port 2, Transmit -
7	Port 2, Receive +
14	Port 2, Receive -
1	Port 3, Transmit +
9	Port 3, Transmit -
2	Port 3, Receive +
10	Port 3, Receive -
6	Protection Switch Load
13	Protection Switch Status
3	No connection
11	Signal ground
4	+12 V dc
5	Signal ground
12	Frame ground

Table 65
8-port DS1 connector P2 pinout and signal names

Pin number	Signal name
8	Port 4, Transmit +
15	Port 4, Transmit -
7	Port 4, Receive +
14	Port 4, Receive -
1	Port 5, Transmit +
(Sheet 1 of 2)	

Table 65 (continued)
8-port DS1 connector P2 pinout and signal names

Pin number	Signal name
9	Port 5, Transmit -
2	Port 5, Receive +
10	Port 5, Receive -
6	Protection Switch Register Bit 0
13	Protection Switch Register Bit 1
3	Protection Switch Register Bit 2
11	Protection Switch Register Bit 3
4	No connection
5	Signal ground
12	Frame ground
(Sheet 2 of 2)	

Table 66
8-port DS1 connector P3 pinout and signal names

Pin number	Signal name
8	Port 6, Transmit +
15	Port 6, Transmit -
7	Port 6, Receive +
14	Port 6, Receive -
1	Port 7, Transmit +
9	Port 7, Transmit -
2	Port 7, Receive +
10	Port 7, Receive -
6	Protection Switch Load
13	Protection Switch Status
3	No connection
(Sheet 1 of 2)	

Table 66 (continued)
8-port DS1 connector P3 pinout and signal names

Pin number	Signal name
11	Signal ground
4	+12 V dc
5	Signal ground
12	Frame ground
Shield	
(Sheet 2 of 2)	

Figure 79
DS1 termination panel pinouts and signal names

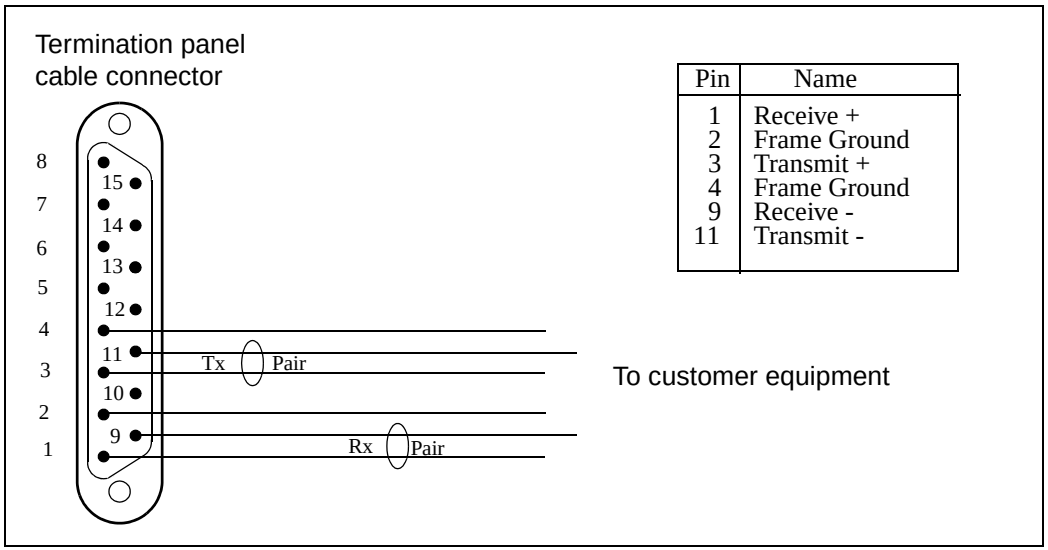

32-port DS1 MSA 1-slot function processors

The 32-port DS1 for multi-service access (MSA) function processor (FP) occupies one slot of a shelf assembly. The product engineering codes (PECs) of available DS1 MSA32 1-slot FPs are:

- NTNQ94AA for the 32-port DS1 MSA 1-slot with the older framer chip for any PCR software
- NTNQ94BA for the 32-port DS1 MSA 1-slot with the framer chip for PCR 6.1 and later

The software card type for an NTNQ94 is 32pDs1Msa, which is the same for its 2-slot equivalent version (NTNQ74). The software configuration information for these FPs is in NN10600-551 *Nortel Networks Multiservice Switch 7400/15000/20000 FP Configuration Reference*.

The 1-slot FPs are the non-optical versions of the MSA32 FPs, and do not have a monitor port on the faceplate.

The typical power consumption of an NTNQ94 is 43 watts while the maximum is 62.5 watts.

The following apply only to the 1-slot MSA32 FPs unless otherwise specified.

- “Faceplate of a 32-port DS1 MSA 1-slot FP with PEC NTNQ94” (page 257)
- “32-port DS1 MSA 1-slot and 2-slot FP replacements” (page 257)
- “32-port DS1 MSA 1-slot and 2-slot FP sparing combinations” (page 258)
- “32-port DS1 MSA termination panels for 1-slot FPs” (page 259)
- “32-port DS1 MSA prefabricated cable assemblies for FPs and sparing panels” (page 260)
- “32-port DS1 MSA custom-made cable assemblies for FPs and sparing panels” (page 268)
- “32-port DS1 MSA 1-slot FP pinouts” (page 269)

- “32-port DS1 MSA termination panel pinouts for CPE connections” (page 274)

32-port DS1 MSA 1-slot faceplate

A 32-port DS1 MSA 1-slot FP occupies one slot in a shelf assembly. (The software checks whether a 1-slot or a 2-slot FP is present so that sparing can be accommodated between the two sizes of FPs.) See the figure “Faceplate of a 32-port DS1 MSA 1-slot FP with PEC NTNQ94” (page 257). Although the 1-slot and 2-slot MSA32 FPs have the same functionality, the 1-slot FP has two 68-pin SCSI 2x34 female D-sub connectors instead of the 44-pin high-density female D-sub connectors of the 2-slot faceplate. The pinouts are identified in “32-port DS1 MSA 1-slot FP pinouts” (page 269).

Figure 80
Faceplate of a 32-port DS1 MSA 1-slot FP with PEC NTNQ94

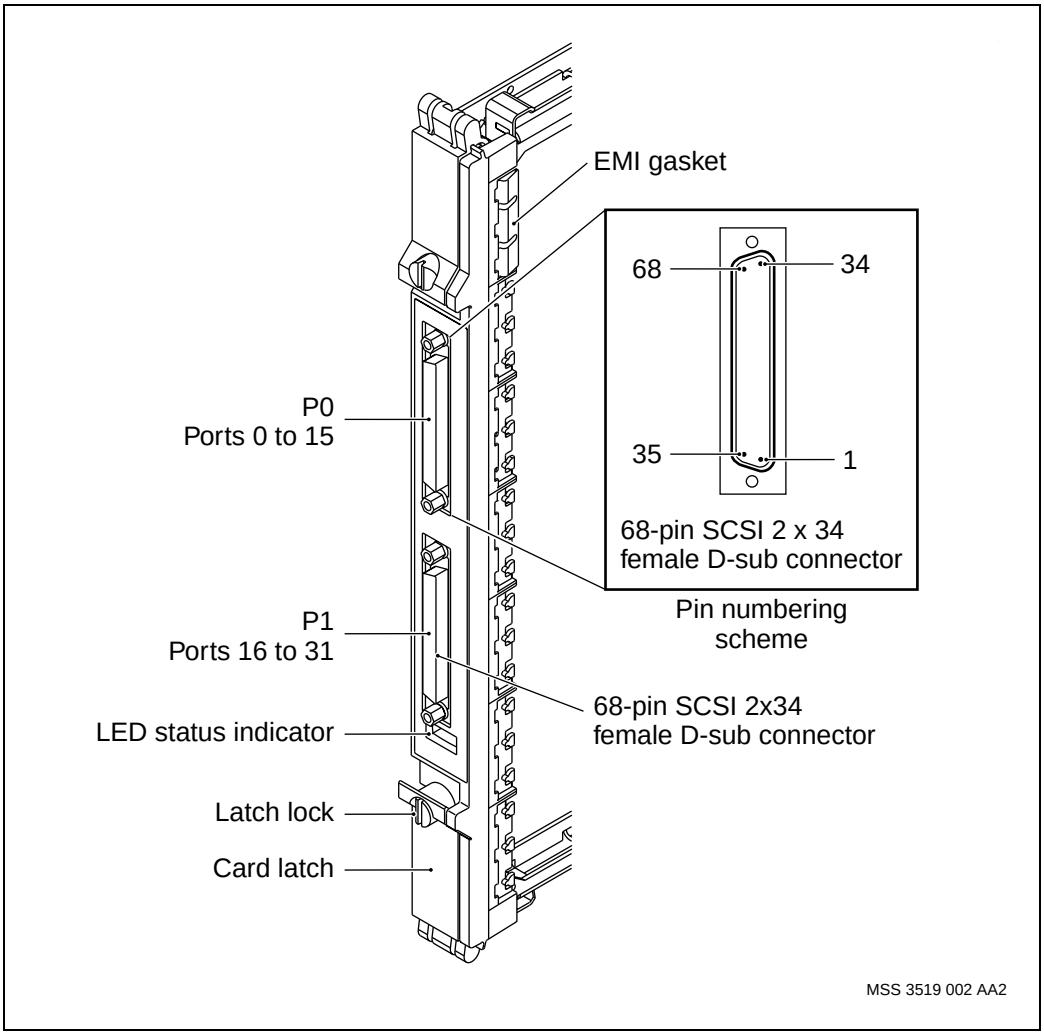

32-port DS1 MSA 1-slot and 2-slot FP replacements

A 32-port DS1 MSA 1-slot FP can replace an equivalent 2-slot FP under specific circumstances, and vice versa. The PECs and circumstances are identified in the table “Compatible replacements for equivalent DS1 MSA 1-slot and 2-slot FPs” (page 258).

Table 67
Compatible replacements for equivalent DS1 MSA 1-slot and 2-slot FPs

PECs of FPs to be replaced	PECs of replacement FPs	Circumstance to enable replacing the FP
NTNQ74 (2-slot)	NTNQ74	normal
	NTNQ94AA	normal, and an FP slot becomes available
	NTNQ94BA	provided the node is running PCR 6.1 or later software, and an FP slot becomes available
NTNQ94Ax (1-slot)	NTNQ94Ax	normal
	NTNQ94Bx	provided the node is running PCR 6.1 or later software
	NTNQ74	provided the adjacent slot to the right of the NTNQ94 is available and, if part of a sparing configuration, the adjacent slot has an even number
NTNQ94Bx (1-slot)	NTNQ94Bx	normal
Note: The value of x is any letter in that PEC vintage.		

32-port DS1 MSA 1-slot and 2-slot FP sparing combinations

The possible combinations of all 32-port DS1 1-slot and 2-slot FPs in sparing configurations are shown in the table “Sparing combinations of DS1 MSA FPs and sparing panels” (page 259). The combination shows DS1 FPs that are 1-slot or 2-slot with or without the optical ports in the same sparing configuration.

Table 68
Sparing combinations of DS1 MSA FPs and sparing panels

	Spare FP	Main FPs	Sparing panels
DS1	NTNQ74 (2-slot)	one or any combination up to six of the following: NTNQ74 without optical ports (2-slot) NTNQ76 multimode with optical ports (2-slot) NTNQ78 single-mode with optical ports (2-slot) NTNQ94 without optical ports (1-slot)	NTJS95, NTY195, or NTY197
DS1	NTNQ76 (2-slot)	one or any combination up to six of the following: NTNQ74 without optical ports (2-slot) NTNQ76 multimode with optical ports (2-slot) NTNQ78 single-mode with optical ports (2-slot) NTNQ94 without optical ports (1-slot)	NTJS95, NTY195, or NTY197
DS1	NTNQ78 (2-slot)	one or any combination up to six of the following: NTNQ74 without optical ports (2-slot) NTNQ76 multimode with optical ports (2-slot) NTNQ78 single-mode with optical ports (2-slot) NTNQ94 without optical ports (1-slot)	NTJS95, NTY195, or NTY197
DS1	NTNQ94 (1-slot)	one or any combination up to six of the following: NTNQ74 without optical ports (2-slot) NTNQ76 multimode with optical ports (2-slot) NTNQ78 single-mode with optical ports (2-slot) NTNQ94 without optical ports (1-slot)	NTJS95, NTY195, or NTY197

32-port DS1 MSA termination panels for 1-slot FPs

The 32-port DS1 MSA 1-slot (or 2-slot) FPs use the termination panels that are identified in “MSA32 DS1 or E1 termination panels” (page 73). These panels fan out customer equipment connections so that each DS1 port has its own termination point and access.

The MSA32 DS1 or E1 termination panels also support either one-for-one sparing or up to one-for-six sparing for the electrical ports on the MSA32 FPs. Depending on the type of panel, one panel is needed for each FP and up to six panels can be interconnected to use one spare FP. The setup involves up to six main FPs and one spare FP.

32-port DS1 MSA prefabricated cable assemblies for FPs and sparing panels

The prefabricated cable assemblies for one or more 32-port DS1 MSA 1-slot or 2-slot FPs and their sparing panels provide:

- interfacing between the sparing panel and its FPs, both the mains and the spare
- inter-panel connections in a one-for-n (1:n) sparing configuration that is not one-for-one (1:1) for MSA32
- interfacing between the sparing panel and intra-office equipment such as CSUs or DSXs

The FP interface and inter-panel cables are manufactured by Nortel Networks in fixed lengths with the appropriate connectors.

Inter-panel connections for one-for-n sparing configurations require flexi-cables for linking the panels together. The product engineering codes (PECs) for the flexi-cables are in the table "PECs of the MSA32 DS1 flexi-cables between sparing panels" (page 260) and the cable assemblies are shown in these figures:

- "Inter-panel flexi-cable NTJS99 for MSA32 sparing panels with RJ-45 connectors" (page 261)
- "Inter-panel flexi-cable NTY199AB for MSA32 sparing panels with DB15 connectors" (page 262)

Table 69
PECs of the MSA32 DS1 flexi-cables between sparing panels

PEC	Type of sparing panel
NTJS99	RJ-45
NTY199AA	DB15 1-port, DB15 2-port
NTY199AB	DB15 1-port, DB15 2-port with shorter flexi-cables

Figure 81
Inter-panel flexi-cable NTJS99 for MSA32 sparing panels with RJ-45 connectors

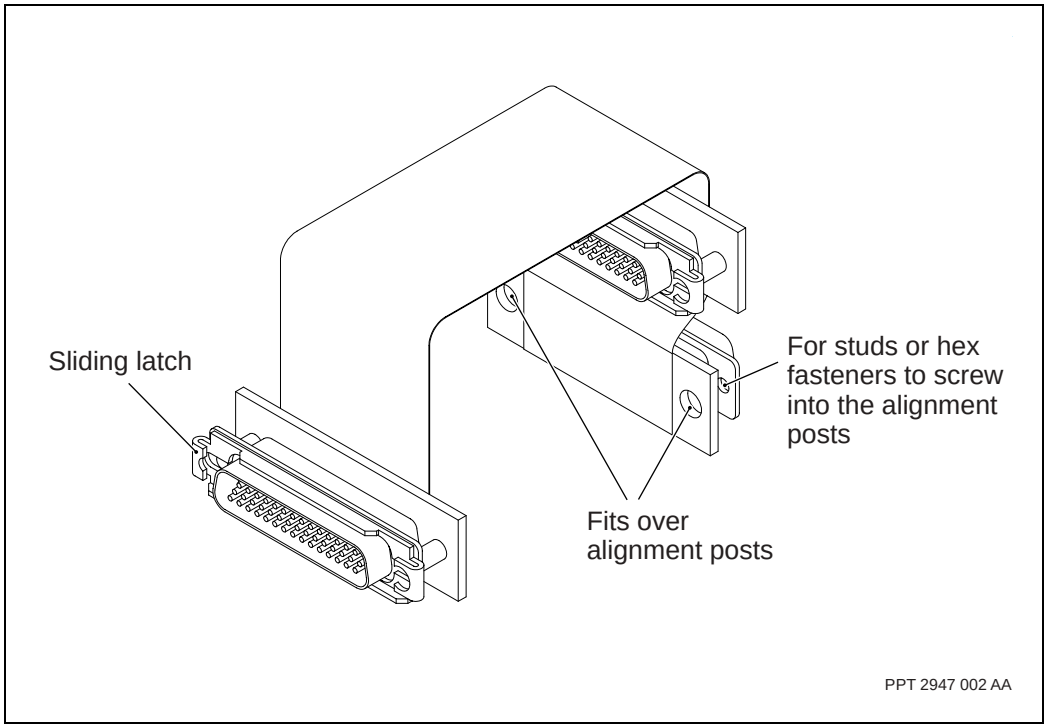

Figure 82
Inter-panel flexi-cable NTY199AB for MSA32 sparing panels with DB15 connectors

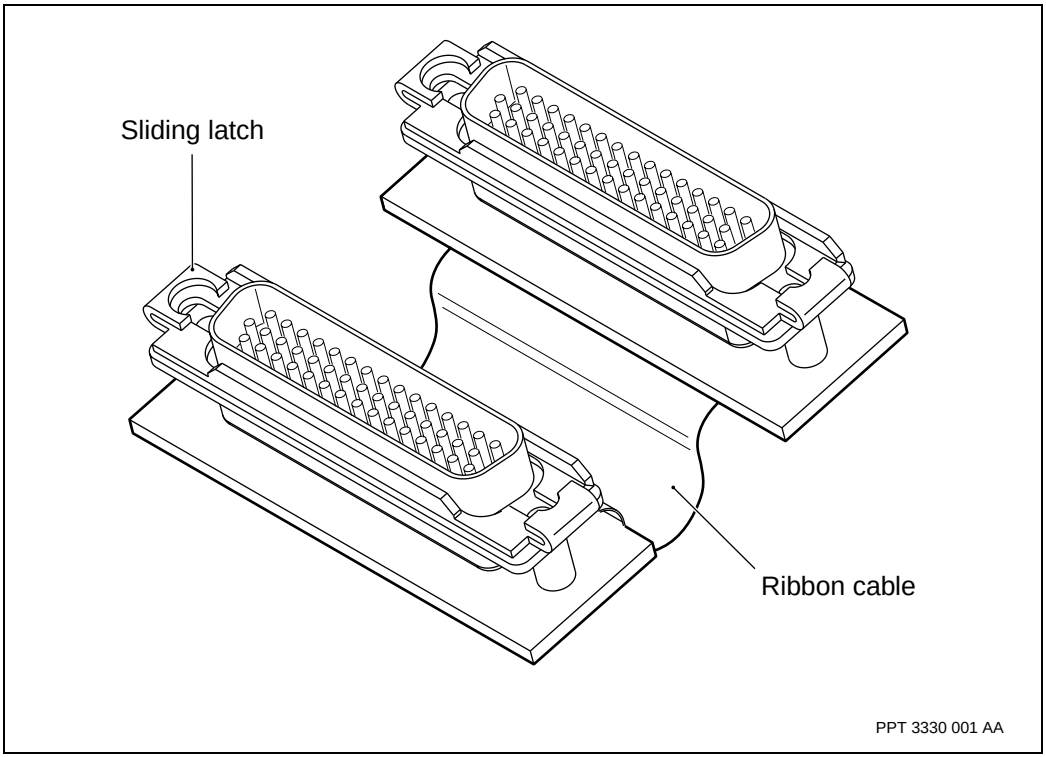

The available MSA32 FP interface cables are listed in the table “PECs of the MSA32 DS1 interface fanout cables from FP to sparing panel” (page 263). In addition to providing connectivity for the DS1 ports, each MSA32 FP interface cable also integrates sparing panel control lines. Each cable also provides ferrite shielding in the connector shrouds, and is automatically grounded when connected securely to Multiservice Switch equipment.

Table 70
PECs of the MSA32 DS1 interface fanout cables from FP to sparing panel

Cable PECs	Connector at FP end	Connector at panel end	Cable length	DS1 FPs	Panel PECs
NTPS03	angled 44-pin high-density male D-sub	straight 44-pin high-density female D-sub	3 m (9.8 ft)	NTNQ74 NTNQ76 NTNQ78	NTJS95 NTY195 NTY196 NTY197
NTPS04	angled 44-pin high-density male D-sub	straight 44-pin high-density female D-sub	15 m (49.2 ft)	NTNQ74 NTNQ76 NTNQ78	NTJS95 NTY195 NTY196 NTY197
NTPS32	angled 68-pin SCSI 2x34 male D-sub	split into two straight 44-pin high-density female D-sub	3 m (9.8 ft)	NTNQ93 NTNQ94	NTJS95 NTY195 NTY196 NTY197
NTPS33	angled 68-pin SCSI 2x34 male D-sub	split into two straight 44-pin high-density female D-sub	15 m (49.2 ft)	NTNQ93 NTNQ94	NTJS95 NTY195 NTY196 NTY197
NTPS36	angled 68-pin SCSI 2x34 male D-sub	split into two straight 44-pin high-density female D-sub with sliding latch (or locking clip)	3 m (9.8 ft)	NTNQ93 NTNQ94	NTJS95 converted to sliding latch D-subs
NTPS37	angled 68-pin SCSI 2x34 male D-sub	split into two straight 44-pin high-density female D-sub with sliding latch (or locking clip)	15 m (49.2 ft)	NTNQ93 NTNQ94	NTJS95 converted to sliding latch D-subs
NTPS39	angled 68-pin SCSI 2x34 male D-sub	split into two straight 44-pin high-density female D-subs; mainly intended to connect to previously installed NTPS03 or NTPS04 cables	1 m (3.3 ft)	NTNQ93 NTNQ94	NTJS95 NTY195 NTY196 NTY197

The fanout cables for the NTNQ93 and NTNQ94 FPs are shown in the following figures:

- “Fanout cable NTPS32 or NTPS33 for a 32-port DS1 MSA 1-slot FP” (page 265)
- “Fanout cable NTPS36 or NTPS37 with sliding latch D-subs for a 32-port DS1 MSA 1-slot FP” (page 266)
- “Fanout cable NTPS03 or NTPS04 to connect to an adapter cable NTPS39 of a DS1 1-slot FP” (page 268)

The prefabricated fanout cable that connects to a cable adapter NTPS39 for use with the 1-slot FPs is shown in the figure “Fanout cable NTPS03 or NTPS04 to connect to an adapter cable NTPS39 of a DS1 1-slot FP” (page 268).

For general information on FP cables, see “Cables” (page 89).

Figure 83
Fanout cable NTPS32 or NTPS33 for a 32-port DS1 MSA 1-slot FP

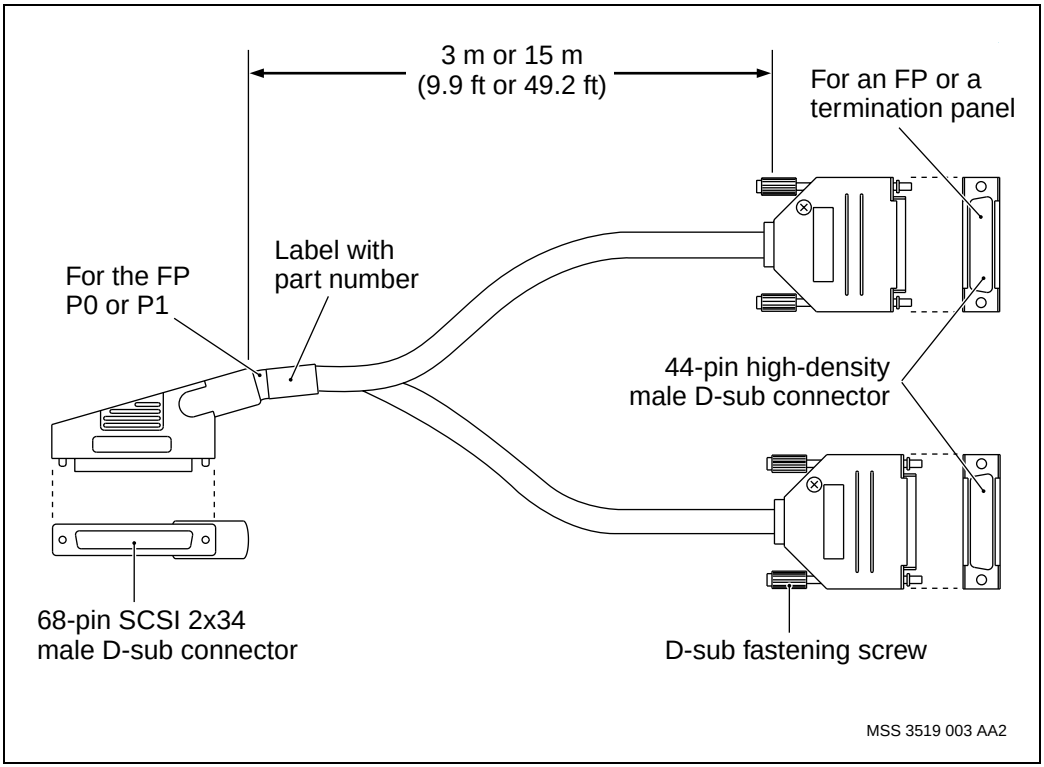

Figure 84
Fanout cable NTPS36 or NTPS37 with sliding latch D-subs for a 32-port DS1 MSA 1-slot FP

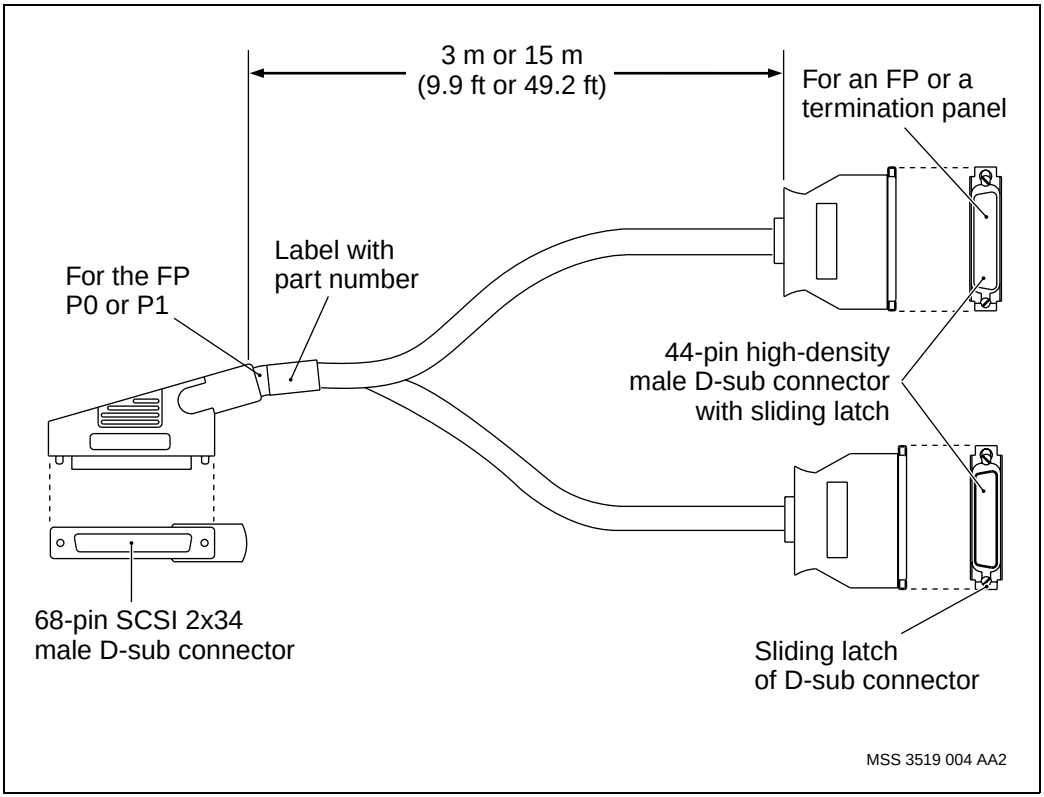

Figure 85
Fanout cable adapter NTPS39 for connecting a 1-slot FP to 2-slot cables NTPS03 or NTPS04

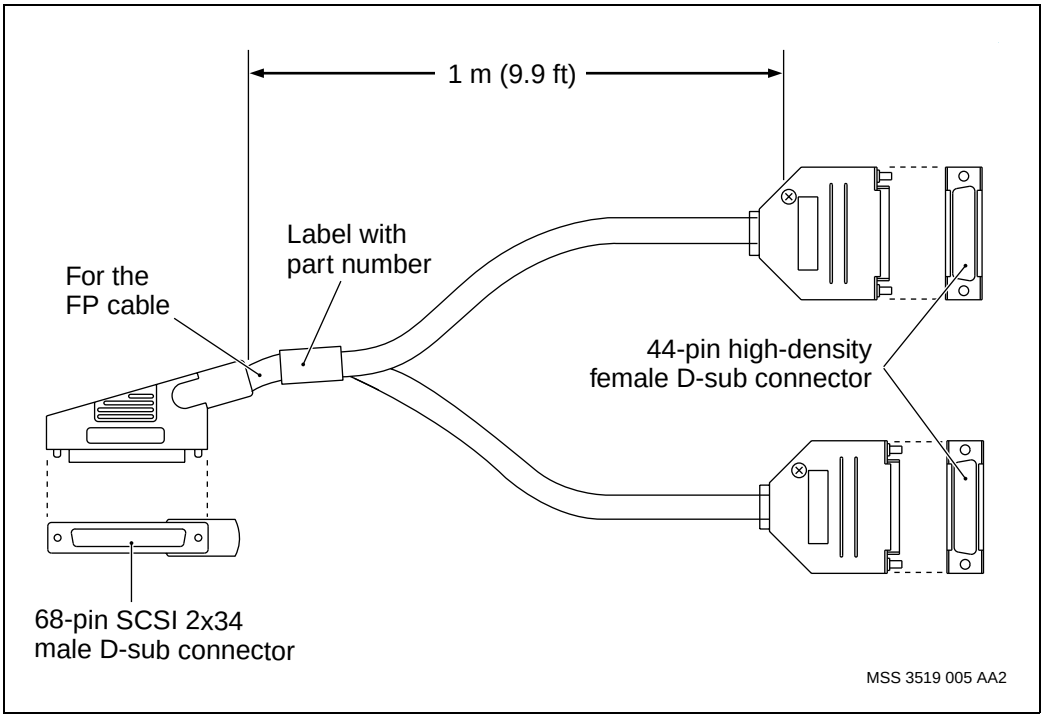

Figure 86
Fanout cable NTPS03 or NTPS04 to connect to an adapter cable NTPS39 of a DS1 1-slot FP

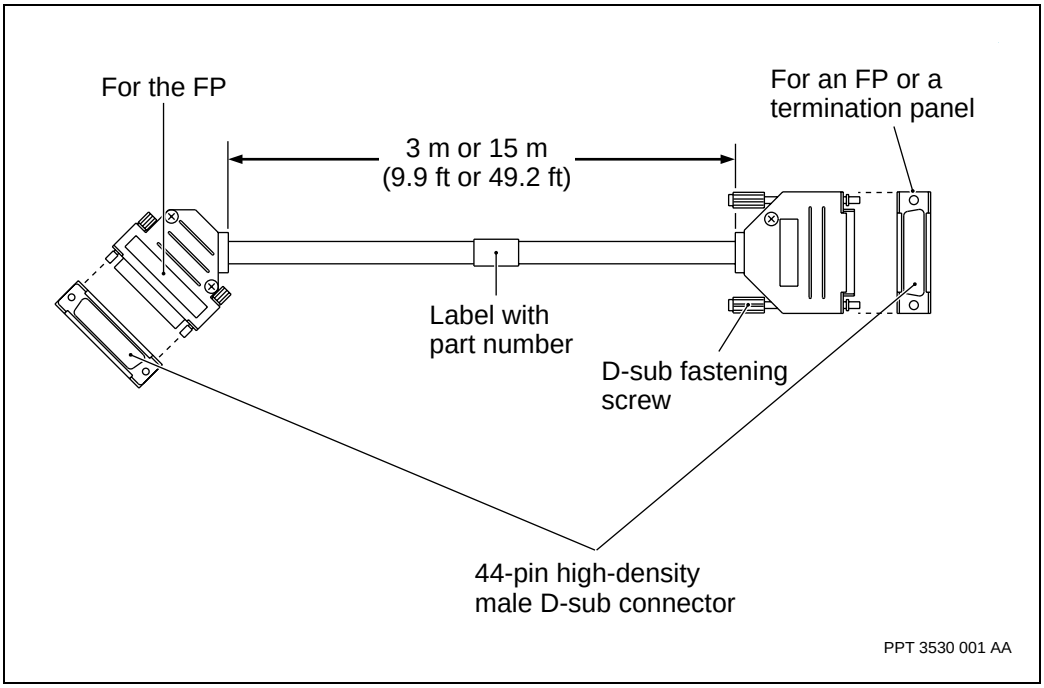

32-port DS1 MSA custom-made cable assemblies for FPs and sparing panels

The specifications to custom make your own 32-port DS1 MSA cable assemblies to connect an FP to a sparing panel are as follows:

- The maximum cable length for DS1 lines to customer equipment is 340 m (1100 ft). The distance between the FP and the termination panel is part of the total length.
- Use AWG No. 28 (0.32 mm), 100 ohm shielded, twisted pair cables.
- The insertion loss of each pair must not exceed 6 dB measured at 1024 kHz. Insertion loss is proportional to cable length and varies among types of cables.
- The types of cable connectors are shown in these figures:

— “Fanout cable NTPS32 or NTPS33 for a 32-port DS1 MSA 1-slot FP” (page 265)

— “Fanout cable NTPS36 or NTPS37 with sliding latch D-subs for a 32-port DS1 MSA 1-slot FP” (page 266)

— “Fanout cable NTPS03 or NTPS04 to connect to an adapter cable NTPS39 of a DS1 1-slot FP” (page 268)

- For a 1-slot FP, use the connector pinouts in “32-port DS1 MSA 1-slot FP pinouts” (page 269).
- For a 2-slot FP, use the connector pinouts in “32-port DS1 MSA 2-slot FP pinouts” (page 283).

For general information on FP cables, see “Cables” (page 89).

32-port DS1 MSA 1-slot FP pinouts

When connecting directly from a 32-port DS1 MSA 1-slot FP to customer premises equipment (CPE), in effect bypassing the MSA32 termination panels or not using the prefabricated Nortel Networks cables, the CPE cabling must be adapted to the FP’s 68-pin D-sub faceplate pinouts. Refer to the figure “Faceplate of a 32-port DS1 MSA 1-slot FP with PEC NTNQ94” (page 257).

The 1-slot NTNQ94 FP has higher density D-sub connectors on its faceplate than the 2-slot NTNQ74 FP, but both FPs connect to the same types of termination or sparing panels. To accommodate the different numbers of pins in the connectors, prefabricated fanout cables and a fanout cable adapter are available from Nortel Networks for the 1-slot FPs. Each fanout cable can be used at either the P0 or P1 sets of ports at the FP. The cables are identified and shown in “32-port DS1 MSA prefabricated cable assemblies for FPs and sparing panels” (page 260).

The relationship of FP and split cable connectors is identified in the table “Mapping of MSA 1-slot FP port numbers to fanout cable connectors” (page 270).

Table 71
Mapping of MSA 1-slot FP port numbers to fanout cable connectors

FP 68-pin connector labels	Fanout cable 44-pin connector labeled P0/P2	Fanout cable 44-pin connector labeled P1/P3
P0 has ports 0 to 15	when connected to MSA termination or sparing panel P0, has ports 0 to 7	when connected to MSA termination or sparing panel P1, has ports 8 to 15
P1 has ports 16 to 31	when connected to MSA termination or sparing panel P2, has ports 16 to 23	when connected to MSA termination or sparing panel P3, has ports 24 to 31 and operational signals

The following tables identify the 1-slot FP 68-pin and termination panel 44-pin connector pinouts:

- “DS1 MSA 1-slot FP connector pinouts for P0 ports 0 to 7 and P1 ports 16 to 23” (page 270)
- “32-port DS1 MSA 1-slot FP connector pinouts for P0 ports 8 to 15 and P1 ports 24 to 31” (page 272)

Table 72
DS1 MSA 1-slot FP connector pinouts for P0 ports 0 to 7 and P1 ports 16 to 23

FP pin numbers of a 68-pin connector	Signal name at FP P0	Signal name at FP P1
57	port 0 Tx +	port 16 Tx +
33	port 0 Tx -	port 16 Tx -
66	port 0 Rx +	port 16 Rx +
32	port 0 Rx -	port 16 Rx -
65	port 1 Tx +	port 17 Tx +
31	port 1 Tx -	port 17 Tx -
64	port 1 Rx +	port 17 Rx +
(Sheet 1 of 3)		

Table 72 (continued)
DS1 MSA 1-slot FP connector pinouts for P0 ports 0 to 7 and P1 ports 16 to 23

FP pin numbers of a 68-pin connector	Signal name at FP P0	Signal name at FP P1
30	port 1 Rx -	port 17 Rx -
63	port 2 Tx +	port 18 Tx +
29	port 2 Tx -	port 18 Tx -
62	port 2 Rx +	port 18 Rx +
28	port 2 Rx -	port 18 Rx -
61	port 3 Tx +	port 19 Tx +
27	port 3 Tx -	port 19 Tx -
60	port 3 Rx +	port 19 Rx +
26	port 3 Rx -	port 19 Rx -
59	port 4 Tx +	port 20 Tx +
25	port 4 Tx -	port 20 Tx -
58	port 4 Rx +	port 20 Rx +
24	port 4 Rx -	port 20 Rx -
57	port 5 Tx +	port 21 Tx +
23	port 5 Tx -	port 21 Tx -
56	port 5 Rx +	port 21 Rx +
22	port 5 Rx -	port 21 Rx -
55	port 6 Tx +	port 22 Tx +
21	port 6 Tx -	port 22 Tx -
54	port 6 Rx +	port 22 Rx +
20	port 6 Rx -	port 22 Rx -
53	port 7 Tx +	port 23 Tx +
19	port 7 Tx -	port 23 Tx -
(Sheet 2 of 3)		

Table 72 (continued)
DS1 MSA 1-slot FP connector pinouts for P0 ports 0 to 7 and P1 ports 16 to 23

FP pin numbers of a 68-pin connector	Signal name at FP P0	Signal name at FP P1
52	port 7 Rx +	port 23 Rx +
18	port 7 Rx -	port 23 Rx -
(Sheet 3 of 3)		

Table 73
32-port DS1 MSA 1-slot FP connector pinouts for P0 ports 8 to 15 and P1 ports 24 to 31

FP pin numbers of 68-pin connector	Signal name at FP P0	Signal name at FP P1
51	port 8 Tx +	port 24 Tx +
17	port 8 Tx -	port 24 Tx -
50	port 8 Rx +	port 24 Rx +
16	port 8 Rx -	port 24 Rx -
49	port 9 Tx +	port 25 Tx +
15	port 9 Tx -	port 25 Tx -
48	port 9 Rx +	port 25 Rx +
14	port 9 Rx -	port 25 Rx -
47	port 10 Tx +	port 26 Tx +
13	port 10 Tx -	port 26 Tx -
46	port 10 Rx +	port 26 Rx +
12	port 10 Rx -	port 26 Rx -
45	port 11 Tx +	port 27 Tx +
11	port 11 Tx -	port 27 Tx -
44	port 11 Rx +	port 27 Rx +
(Sheet 1 of 2)		

Table 73 (continued)
32-port DS1 MSA 1-slot FP connector pinouts for P0 ports 8 to 15 and P1 ports 24 to 31

FP pin numbers of 68-pin connector	Signal name at FP P0	Signal name at FP P1
10	port 11 Rx -	port 27 Rx -
43	port 12 Tx +	port 28 Tx +
9	port 12 Tx -	port 28 Tx -
42	port 12 Rx +	port 28 Rx +
8	port 12 Rx -	port 28 Rx -
41	port 13 Tx +	port 29 Tx +
7	port 13 Tx -	port 29 Tx -
40	port 13 Rx +	port 29 Rx +
6	port 13 Rx -	port 29 Rx -
39	port 14 Tx +	port 30 Tx +
5	port 14 Tx -	port 30 Tx -
38	port 14 Rx +	port 30 Rx +
4	port 14 Rx -	port 30 Rx -
37	port 15 Tx +	port 31 Tx +
3	port 15 Tx -	port 31 Tx -
36	port 15 Rx +	port 31 Rx +
2	port 15 Rx -	port 31 Rx -
34	- - - - - - - - -	FP_CLOCK
68	- - - - - - - - -	FP_DATA
1	- - - - - - - - -	12V_PROT
35	- - - - - - - - -	ground
shield	frame ground	frame ground

(Sheet 2 of 2)

32-port DS1 MSA termination panel pinouts for CPE connections

The pinouts for connecting customer premises equipment (CPE) to a 32-port DS1 MSA termination panel are identified in the figures:

- “32-port DS1 MSA termination panel pinouts and signal names: 1-port/DB15” (page 274)
- “32-port DS1 MSA termination panel pinouts and signal names: 2-port/DB15” (page 275)
- “32-port DS1 MSA termination panel pinouts and signal names: RJ-45” (page 276)

Figure 87
32-port DS1 MSA termination panel pinouts and signal names: 1-port/DB15

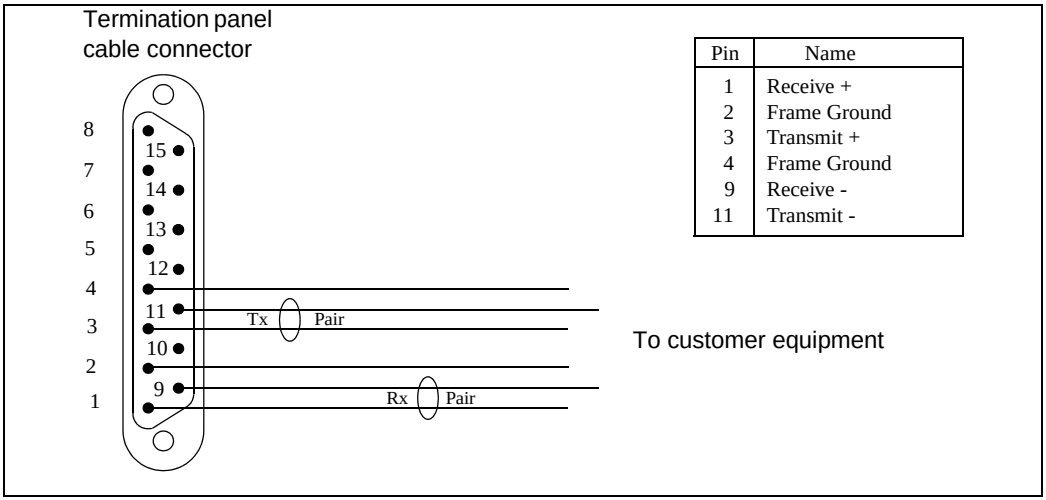

Pin	Name
1	Receive +
2	Frame Ground
3	Transmit +
4	Frame Ground
9	Receive -
11	Transmit -

Pinouts for each of the 32 ports follow the pattern shown in the figure “32-port DS1 MSA termination panel pinouts and signal names: 1-port/DB15” (page 274).

Figure 88
32-port DS1 MSA termination panel pinouts and signal names: 2-port/DB15

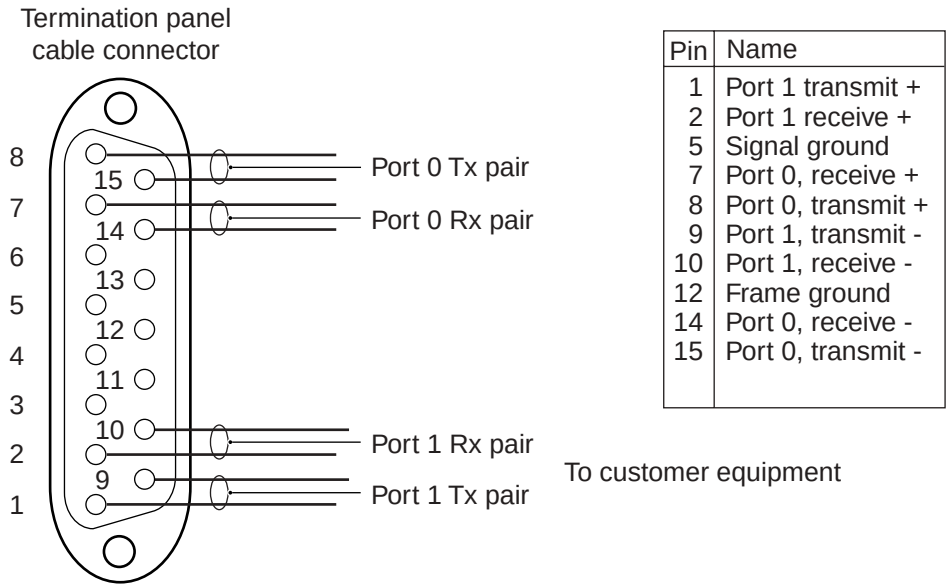

Pin	Name
1	Port 1 transmit +
2	Port 1 receive +
5	Signal ground
7	Port 0, receive +
8	Port 0, transmit +
9	Port 1, transmit -
10	Port 1, receive -
12	Frame ground
14	Port 0, receive -
15	Port 0, transmit -

Pinouts for each of the 32 ports follow the pattern shown in the figure "32-port DS1 MSA termination panel pinouts and signal names: 2-port/DB15" (page 275). All odd-numbered ports (1,3,5,...,31) have identical pinouts, as do all even-numbered ports (0,2,4,...,30).

Figure 89
32-port DS1 MSA termination panel pinouts and signal names: RJ-45

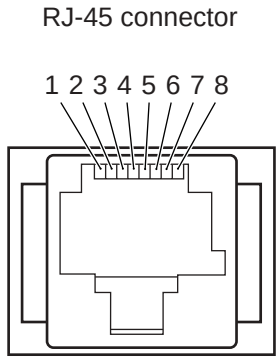

Pin	Signal
1	Rx-
2	Rx+
3	Not used
4	Tx-
5	Tx+
6	Not used
7	Not used
8	Not used

PPT 2898 001 AA

Pinouts for each of the 32 ports follow the pattern shown in the figure "32-port DS1 MSA termination panel pinouts and signal names: RJ-45" (page 276).

32-port DS1 MSA 2-slot function processors

The 32-port DS1 for multi-service access (MSA) function processor (FP) occupies two slots of a shelf assembly. The product engineering codes (PECs) of available DS1 MSA32 2-slot FPs are:

- NTNQ74 for the 32-port DS1 MSA 2-slot
- NTNQ76 for the 32-port DS1 MSA 2-slot with 2-port (protected) OC-3/STM-1 multimode
- NTNQ78 for the 32-port DS1 MSA 2-slot with 2-port (protected) OC-3/STM-1 single-mode

The software card types for the 2-slot FPs are as follows.

- NTNQ74 has 32pDs1Msa (the same as NTNQ94)
- NTNQ76 has 32pDs1MsaMtp
- NTNQ78 has 32pDs1MsaStp

The software configuration information for these FPs is in NN10600-551 *Nortel Networks Multiservice Switch 7400/15000/20000 FP Configuration Reference*.

The following apply to the MSA32 FPs. Unless otherwise specified, the information applies to an MSA32 2-slot FP with or without the optional optical ports.

- “32-port DS1 MSA 2-slot faceplates” (page 278)
- “32-port DS1 MSA 1-slot and 2-slot FP replacements” (page 257)
- “32-port DS1 MSA 2-slot FP sparing combinations” (page 281)
- “32-port DS1 MSA termination panels for 2-slot FPs” (page 281)
- “32-port DS1 MSA 2-slot FP pinouts” (page 283)
- “32-port DS1 MSA cable assemblies for a 2-slot FP and sparing panel” (page 282)
- “OC-3 cable assembly for optical ports on a 32-port DS1 MSA 2-slot FP” (page 292)

- “OC-3 line automatic protection switching on a 32-port DS1 MSA 2-slot FP” (page 293)
- “OC-3 interface characteristics on a 32-port DS1 MSA 2-slot FP” (page 293)
- “Connecting to OC-3 ports on a 32-port DS1 MSA 2-slot FP” (page 295)

32-port DS1 MSA 2-slot faceplates

A 32-port DS1 MSA 2-slot FP occupies two adjacent slots in a shelf. (The software uses only the first slot number and ignores the second one.) For examples, see the figures

- “Faceplate of a 32-port DS1 MSA 2-slot NTNQ76 or NTNQ78 with OC-3 ports” (page 280)
- “Faceplate of a 32-port DS1 MSA 2-slot NTNQ74” (page 279)

The transmit (TX) connection is located at the top half of the OC-3 port, while the receive (RX) connection is at the bottom.

The maintenance port on the faceplate of the DS1 MSA 2-slot FP is unsupported.

Figure 90
Faceplate of a 32-port DS1 MSA 2-slot NTNQ74

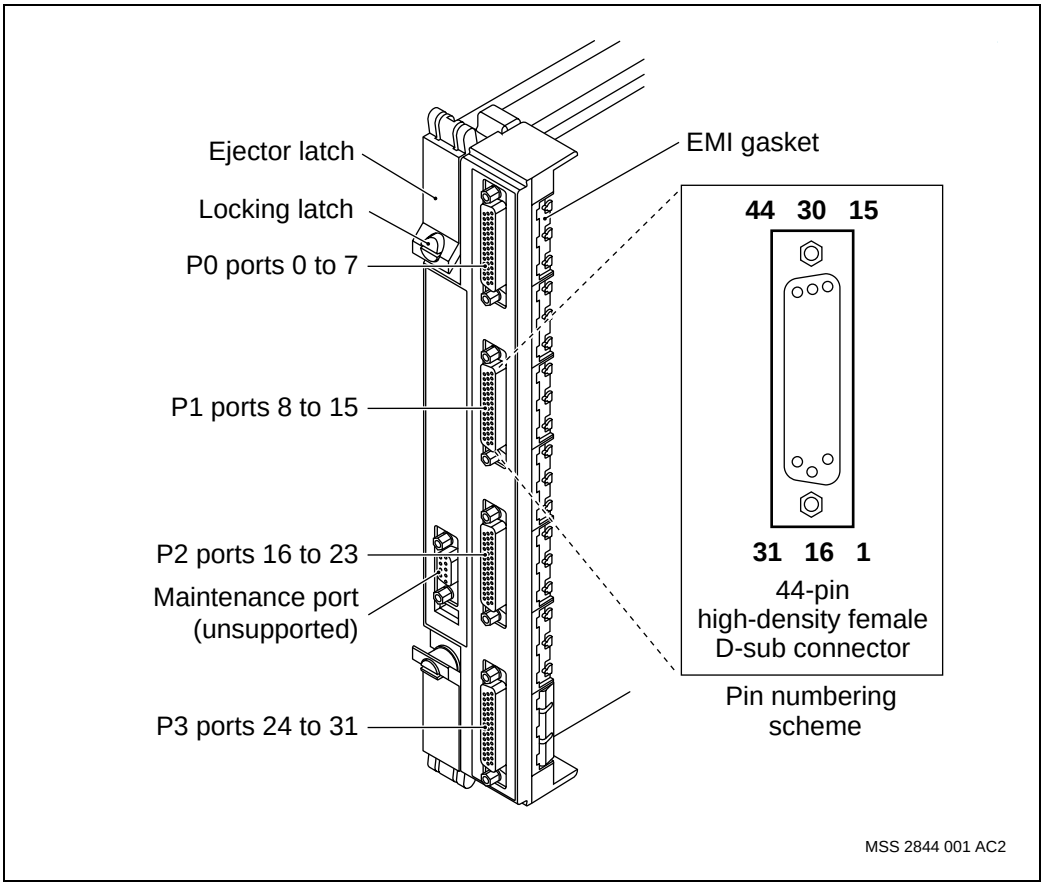

Figure 91
Faceplate of a 32-port DS1 MSA 2-slot NTNQ76 or NTNQ78 with OC-3 ports

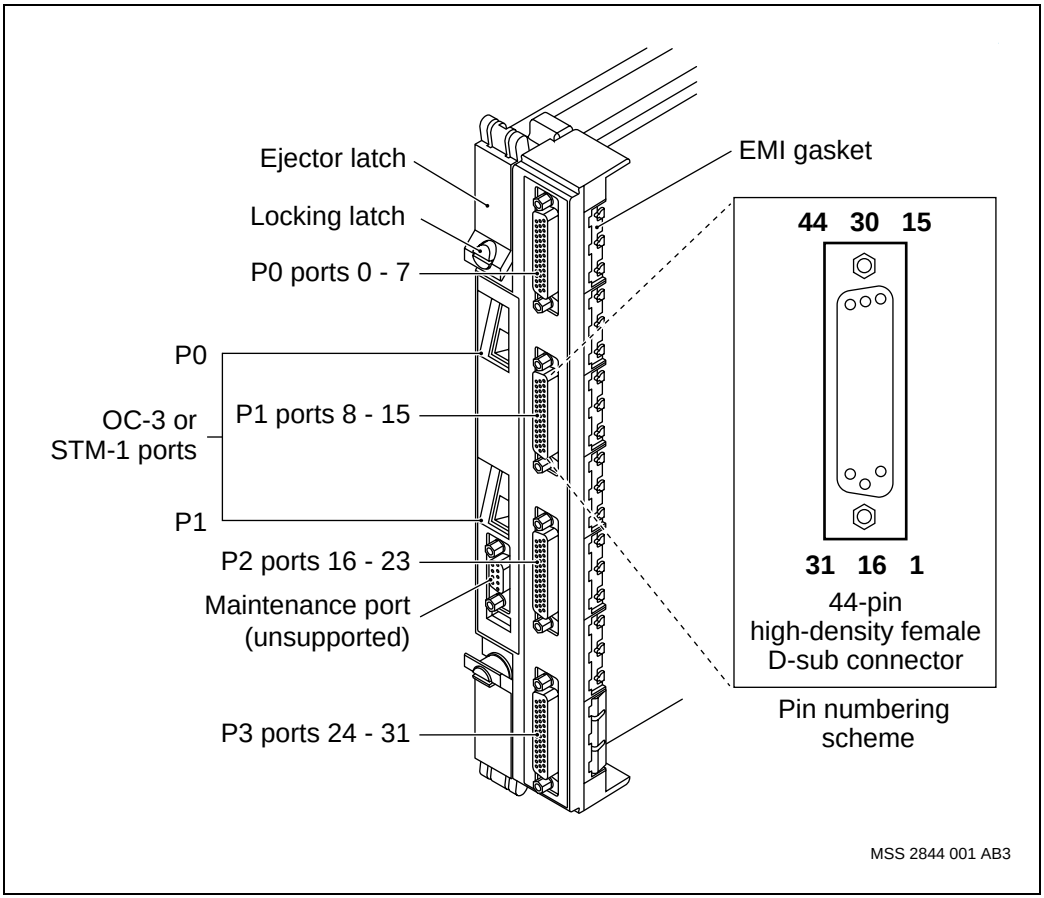

CAUTION
Risk of service loss
Two power supplies must be installed before inserting a 32-port MSA FP. There is a risk of a shelf reset when installing a 32-port MSA FP in a shelf with only one operating power supply unit. This risk does not apply when the 32-port MSA FP is already installed and one of two power supplies fails.

CAUTION
Risk of service loss by a shelf reset
Two power supplies must be installed before inserting a 32-port MSA 2-slot FP with the PEC NTNQ69AA, NTNQ71AA, NTNQ73AA, NTNQ74AA, NTNQ76AA, or NTNQ78AA. There is a risk of a shelf reset when installing one of these FPs in a shelf with only one operating power supply unit. This risk does not apply when the FPs are already installed and one of two power supplies fails.

32-port DS1 MSA 2-slot FP replacements

A 32-port DS1 MSA 2-slot FP can be replaced or upgraded by an equivalent 1-slot FP under specific circumstances. The PECs and circumstances are identified in the table “Compatible replacements for equivalent DS1 MSA 1-slot and 2-slot FPs” (page 258).

32-port DS1 MSA 2-slot FP sparing combinations

The possible combinations of all 32-port DS1 1-slot and 2-slot FPs in sparing configurations are shown in the table “Sparing combinations of DS1 MSA FPs and sparing panels” (page 259).

32-port DS1 MSA termination panels for 2-slot FPs

The 32-port DS1 MSA 2-slot (or 1-slot) FPs use the termination panels that are identified in “MSA32 DS1 or E1 termination panels” (page 73). These panels fan out customer equipment connections so that each DS1 port has its own termination point and access.

The MSA32 DS1 or E1 termination panels also support either one-for-one sparing or up to one-for-six sparing for the electrical ports on the MSA32 FPs. Depending on the type of panel, one panel is needed for each FP and up to six panels can be interconnected to use one spare FP. The setup involves up to six main FPs and one spare FP.

32-port DS1 MSA cable assemblies for a 2-slot FP and sparing panel

The cable assemblies that are used to connect one or more 32-port DS1 MSA 2-slot FPs to a DS1 (or E1) MSA32 sparing panel are identified in:

- the section “32-port DS1 MSA prefabricated cable assemblies for FPs and sparing panels” (page 260)
- the table “DS1 MSA32 cable assembly parts for direct connection to a 2-slot FP” (page 282)
- the table “DS1 MSA32 cable assembly parts for a 1-port DB15 sparing panel” (page 283)
- the table “DS1 MSA32 cable assembly parts for a 2-port DB15 sparing panel” (page 283)

For an RJ-45 connection, use STP5 shielded cable.

Table 74
DS1 MSA32 cable assembly parts for direct connection to a 2-slot FP

Qty	Item	Description
	MTR R0119074	cable, 25 twisted pairs, 28-gauge (0.32 mm) strand
2	NT A0351608	high-density D-sub connector
88	NT A0360941	high-density D-sub connector contact, 22 - 28 AU crimp
1	NT A0311933	accessory D-sub connector, joining latching
1	NT A0800332	D-sub hood connector, D-25 array
1	NT A0800333	D-sub hood connector, D-25 array
2	NT A0740362	cable clamp (standard) for D-sub metal hood
1	NT P0633705	cable tie, tie marker

Table 75
DS1 MSA32 cable assembly parts for a 1-port DB15 sparing panel

Qty	Item	Description
	Belden 8106	cable, 100 ohm, 6 twisted pairs, 24-gauge strand
2	NT A0380877	AMP 205206-3, connector housing, 15-pin D-sub, male, tin plated, with grounding indents
12	NT A0291226	AMP 66506-3 pin for above, 20- to 24-gauge wire
2	NT A0361050	AMP 747099-3 straight hood kit, 15-pin D-sub
4	NT P0180927	0.112-40 x 0.5” pan-head machine screw
4	NT P0387666	0.115” spring washer

Table 76
DS1 MSA32 cable assembly parts for a 2-port DB15 sparing panel

Qty	Item	Description
	Belden 8106	cable, 100 ohm, 6 twisted pairs, 24-gauge strand
2	NT A0380877	AMP 205206-3, connector housing, 15-pin D-sub, male, tin plated, with grounding indents
20	NT A0291226	AMP 66506-3 pin for above, 20- to 24-gauge wire
2	NT A0361050	AMP 747099-3 straight hood kit, 15-pin D-sub
4	NT P0180927	0.112-40 x 0.5” pan-head machine screw
4	NT P0387666	0.115” spring washer

32-port DS1 MSA 2-slot FP pinouts

When connecting directly from the 32-port DS1 MSA 2-slot FP to customer premises equipment (CPE), in effect bypassing the MSA32 termination panels or not using the prefabricated Nortel Networks cables, the CPE cabling must be adapted to the FP’s cabling pinouts.

Connector P3 on the FP faceplate has a different pinout than the connectors P0, P1, and P2. When connecting CPE directly to the P0, P1, P2, or P3 connectors on the FP, do not connect anything to pins 1, 2, or 16.

See these tables for information on specific FP connector pinouts:

- “32-port DS1 MSA 2-slot FP connector P0 pinout and signal names” (page 284)
- “32-port DS1 MSA 2-slot FP connector P1 pinout and signal names” (page 286)
- “32-port DS1 MSA 2-slot FP connector P2 pinout and signal names” (page 288)
- “32-port DS1 MSA 2-slot FP connector P3 pinout and signal names” (page 290)

Table 77
32-port DS1 MSA 2-slot FP connector P0 pinout and signal names

Pin number	Signal name
9	Port 0, Transmit -
39	Port 0, Transmit +
10	Port 0, Receive -
25	Port 0, Receive +
27	Port 1, Transmit -
41	Port 1, Transmit +
11	Port 1, Receive -
26	Port 1, Receive +
28	Port 2, Transmit -
42	Port 2, Transmit +
13	Port 2, Receive +
43	Port 2, Receive -
15	Port 3, Transmit -
30	Port 3, Transmit +
14	Port 3, Receive +
44	Port 3, Receive -
(Sheet 1 of 3)	

Table 77 (continued)
32-port DS1 MSA 2-slot FP connector P0 pinout and signal names

Pin number	Signal name
18	Port 4, Transmit -
32	Port 4, Transmit +
3	Port 4, Receive -
33	Port 4, Receive +
5	Port 5, Transmit -
20	Port 5, Transmit +
4	Port 5, Receive -
34	Port 5, Receive +
6	Port 6, Transmit -
21	Port 6, Transmit +
22	Port 6, Receive -
36	Port 6, Receive +
8	Port 7, Transmit -
38	Port 7, Transmit +
23	Port 7, Receive -
37	Port 7, Receive +
1	Signal ground
16	Signal ground
17	Signal ground
24	Signal ground
31	Signal ground
35	Signal ground
2	Signal ground
7	Signal ground
12	Signal ground
(Sheet 2 of 3)	

Table 77 (continued)
32-port DS1 MSA 2-slot FP connector P0 pinout and signal names

Pin number	Signal name
19	Signal ground
29	Signal ground
40	Signal ground
shield	Frame ground
Note: When connecting directly from CPE to the FP, do not connect anything to pins 1, 2, or 16.	
(Sheet 3 of 3)	

Table 78
32-port DS1 MSA 2-slot FP connector P1 pinout and signal names

Pin number	Signal name
9	Port 8, Transmit -
39	Port 8, Transmit +
10	Port 8, Receive -
25	Port 8, Receive +
27	Port 9, Transmit -
41	Port 9, Transmit +
11	Port 9, Receive -
26	Port 9, Receive +
28	Port 10, Transmit -
42	Port 10, Transmit +
13	Port 10, Receive +
43	Port 10, Receive -
15	Port 11, Transmit -
30	Port 11, Transmit +
14	Port 11, Receive +
(Sheet 1 of 3)	

Table 78 (continued)
32-port DS1 MSA 2-slot FP connector P1 pinout and signal names

Pin number	Signal name
44	Port 11, Receive -
18	Port 12, Transmit -
32	Port 12, Transmit +
3	Port 12, Receive -
33	Port 12, Receive +
5	Port 13, Transmit -
20	Port 13, Transmit +
4	Port 13, Receive -
34	Port 13, Receive +
6	Port 14, Transmit -
21	Port 14, Transmit +
22	Port 14, Receive -
36	Port 14, Receive +
8	Port 15, Transmit -
38	Port 15, Transmit +
23	Port 15, Receive -
37	Port 15, Receive +
1	Signal ground
16	Signal ground
17	Signal ground
24	Signal ground
31	Signal ground
35	Signal ground
2	Signal ground
7	Signal ground
(Sheet 2 of 3)	

Table 78 (continued)
32-port DS1 MSA 2-slot FP connector P1 pinout and signal names

Pin number	Signal name
12	Signal ground
19	Signal ground
29	Signal ground
40	Signal ground
shield	Frame ground
Note: When connecting directly from CPE to the FP, do not connect anything to pins 1, 2, or 16.	
(Sheet 3 of 3)	

Table 79
32-port DS1 MSA 2-slot FP connector P2 pinout and signal names

Pin number	Signal name
9	Port 16, Transmit -
39	Port 16, Transmit +
10	Port 16, Receive -
25	Port 16, Receive +
27	Port 17, Transmit -
41	Port 17, Transmit +
11	Port 17, Receive -
26	Port 17, Receive +
28	Port 18, Transmit -
42	Port 18, Transmit +
13	Port 18, Receive +
43	Port 18, Receive -
15	Port 19, Transmit -
30	Port 19, Transmit +
(Sheet 1 of 3)	

Table 79 (continued)
32-port DS1 MSA 2-slot FP connector P2 pinout and signal names

Pin number	Signal name
14	Port 19, Receive +
44	Port 19, Receive -
18	Port 20, Transmit -
32	Port 20, Transmit +
3	Port 20, Receive -
33	Port 20, Receive +
5	Port 21, Transmit -
20	Port 21, Transmit +
4	Port 21, Receive -
34	Port 21, Receive +
6	Port 22, Transmit -
21	Port 22, Transmit +
22	Port 22, Receive -
36	Port 22, Receive +
8	Port 23, Transmit -
38	Port 23, Transmit +
23	Port 23, Receive -
37	Port 23, Receive +
1	Signal ground
16	Signal ground
17	Signal ground
24	Signal ground
31	Signal ground
35	Signal ground
2	Signal ground
(Sheet 2 of 3)	

Table 79 (continued)
32-port DS1 MSA 2-slot FP connector P2 pinout and signal names

Pin number	Signal name
7	Signal ground
12	Signal ground
19	Signal ground
29	Signal ground
40	Signal ground
Note: When connecting directly from CPE to the FP, do not connect anything to pins 1, 2, or 16.	
(Sheet 3 of 3)	

Table 80
32-port DS1 MSA 2-slot FP connector P3 pinout and signal names

Pin number	Signal name
9	Port 24, Transmit -
39	Port 24, Transmit +
10	Port 24, Receive -
25	Port 24, Receive +
27	Port 25, Transmit -
41	Port 25, Transmit +
11	Port 25, Receive -
26	Port 25, Receive +
28	Port 26, Transmit -
42	Port 26, Transmit +
13	Port 26, Receive +
43	Port 26, Receive -
15	Port 27, Transmit -
30	Port 27, Transmit +
(Sheet 1 of 3)	

Table 80 (continued)
32-port DS1 MSA 2-slot FP connector P3 pinout and signal names

Pin number	Signal name
14	Port 27, Receive +
44	Port 27, Receive -
18	Port 28, Transmit -
32	Port 28, Transmit +
3	Port 28, Receive -
33	Port 28, Receive +
5	Port 29, Transmit -
20	Port 29, Transmit +
4	Port 29, Receive -
34	Port 29, Receive +
6	Port 30, Transmit -
21	Port 30, Transmit +
22	Port 30, Receive -
36	Port 30, Receive +
8	Port 31, Transmit -
38	Port 31, Transmit +
23	Port 31, Receive -
37	Port 31, Receive +
1	Sparing control (this is different than the same pin for P0, P1, and P2)
16	12 V feed to sparing panel (this is different than the same pin for P0, P1, and P2)
17	Signal ground
24	Signal ground
31	Signal ground
35	Signal ground
(Sheet 2 of 3)	

Table 80 (continued)
32-port DS1 MSA 2-slot FP connector P3 pinout and signal names

Pin number	Signal name
2	Sparing control (this is different than the same pin for P0, P1, and P2)
7	Signal ground
12	Signal ground
19	Signal ground
29	Signal ground
40	Signal ground
shield	Frame ground
Note: When connecting directly from CPE to the FP, do not connect anything to pins 1, 2, or 16.	
(Sheet 3 of 3)	

32-port DS1 MSA termination panel pinouts for CPE connections

The pinouts for connecting customer premises equipment (CPE) to a 32-port DS1 MSA termination panel are the same for DS1 MSA 1-slot and 2-slot FPs. See “32-port DS1 MSA termination panel pinouts for CPE connections” (page 274).

OC-3 cable assembly for optical ports on a 32-port DS1 MSA 2-slot FP

When a 32-port DS1 MSA FP has the optional optical ports, it requires optical cabling. The fiber mode type must be the same as the FP mode type. Use single-mode fiber cable with single-mode FPs and multimode fiber cable with multimode FPs.

Multimode fiber (MMF) cable must conform to ANSI/EIA/TIA-568. The MMF has a core diameter of 62.5 microns and cladding diameter of 125 microns. The modal bandwidth is at least 500 MHz-km and the attenuation is less than 1.0 dB/Km at 1300 nm.

The single-mode fiber (SMF) cable has a core diameter of 9 microns and cladding diameter of 125 microns. The attenuation is less than 0.5 dB/Km at 1300 nm.

Connectors should be industry standard duplex SC connectors.

The sum of cable splice losses and connector losses from the FP to customer equipment must not exceed 10 dB for multimode and 12 dB for single-mode. The losses in a transmission path determines the distance the FP can send a signal. The maximum distance from the FP to customer equipment is 2 km for multimode and 15 to 20 km for single-mode, depending on the losses due to splices and connectors.

You can purchase cables with attached connectors that meet the above specifications from any supplier of fiber optic cables.

For more information, see “Cables” (page 89).

OC-3 line automatic protection switching on a 32-port DS1 MSA 2-slot FP

SONET line automatic protection switching (line APS), or line protection, is a standards-defined feature enabling a form of line sparing on optical cards.

For more information on line APS, see NN10600-550 *Nortel Networks Multiservice Switch 7400/15000/20000 Common Configuration Procedures* and NN10600-551 *Nortel Networks Multiservice Switch 7400/15000/20000 FP Configuration Reference*.

OC-3 interface characteristics on a 32-port DS1 MSA 2-slot FP

When a DS1 MSA32 FP has the optional optical ports, the OC-3 ATM portion of the 2-slot FP has the following characteristics as defined in ANSI T1E1.2 95-003.

Table 81
OC-3 ATM general interface characteristics on a DS1 MSA 2-slot FP

General optical interface characteristics	
Connector	Dual SC
Bit Rate	155.520 Mbit/s
Line Code	binary non-return-to-zero (NRZ)

Table 82
OC-3 single-mode intermediate reach optical interface characteristics on a DS1 MSA 2-slot FP

Characteristic	**Range**
Emission Wavelength	1261 nm to 1360 nm
Attenuation Range	0 to 28 dB
Spectral Width: Maximum RMS Width	4 nm
Mean Transmission Power	-5 to 0 dBm
Minimum Extinction Ratio	10.0 dB
Eye Pattern Mask	As per ITU G.957 Fig 2, ANSI T1E1.2/94-002R1-Fig 10, TA-253 Issue 8 Fig 4-2
Maximum receive power (average)	0 dBm
Minimum receive power (average)	-34 dBm
Optical Path Power Penalty	1 dB

Table 83
OC-3 multimode optical interface characteristics on a DS1 MSA 2-slot FP

Multimode Optical Interface Characteristics	
Characteristics	**Range**
Center Wavelength	1270 nm to 1380 nm
Attenuation Range	0 to 12.5 dB
Maximum Spectral Width:	200 nm
Mean Transmission Power	-19 to -14 dBm
Minimum Extinction Ratio	10 dB
Rise time, 20 to 80% Fall time, 20 to 80%	2.5 nanoseconds 2.5 nanoseconds
Overshoot%	10
Rx sensitivity (dBm)	-32.5 to -14 dBm

Connecting to OC-3 ports on a 32-port DS1 MSA 2-slot FP

The OC-3 ATM IP sends out a signal stronger than the OC-3 ATM FP can handle. In the case that these cards are used together within a network, a 10 dB attenuator is required for the Tx port of the OC-3 ATM IP. The attenuator will lower the strength of the signal to a maximum -10 dB, an acceptable signal for the OC-3 ATM FP.

Chapter 12
DS3 function processors

Frame-based services are supported by the following Nortel Networks Multiservice Switch DS3 function processors (FPs):

- “1-port DS3 function processor” (page 297)
- “1-port DS3C function processor” (page 301)

ATM services are supported by the following Multiservice Switch DS3 FPs:

- “2-port DS3C TDM function processor” (page 305)
- “3-port DS3 ATM function processor” (page 308)
- “3-port DS3 ATM IP function processor” (page 310)

1-port DS3 function processor

See these sections for information about the 1-port DS3 function processor (FP):

- “1-port DS3 faceplate” (page 298)
- “1-port DS3 termination panels” (page 300)
- “1-port DS3 cable assembly” (page 300)
- “1-port DS3 pinouts” (page 300)

1-port DS3 faceplate

The Monitor (Tx monitor) connector can be used to connect to test equipment and test the card while it is in service. It carries a -26 dB tap of the transmit (Tx) connector signal. The subminiature 9-pin D-type connector provides a one-for-one sparing capability.

Figure 92
1-port DS3 faceplate

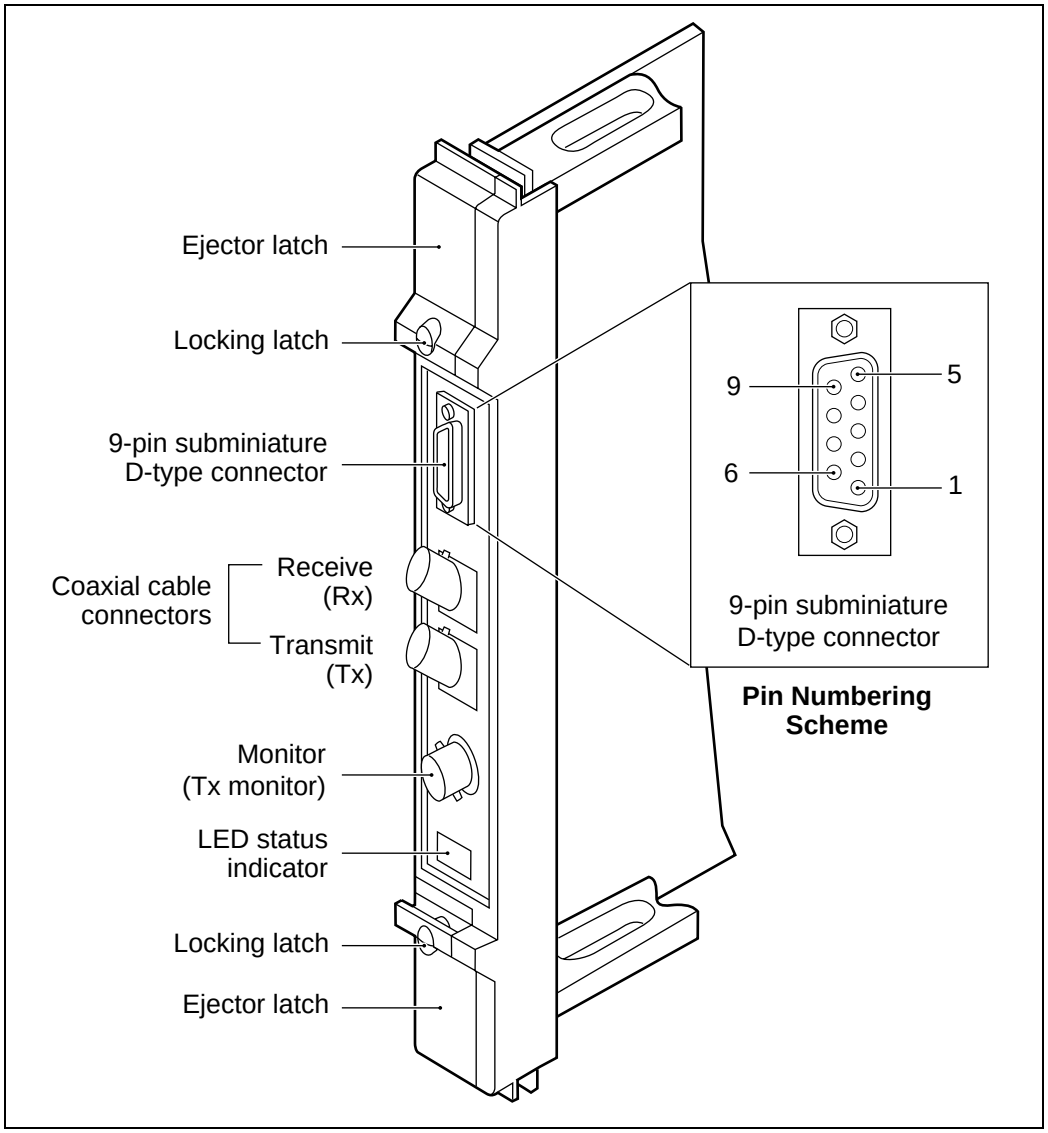

1-port DS3 termination panels

The 1-port DS3 FP uses the DS3/E3 termination panels. These panels provide a break-out for customer-equipment connections and support sparing. You can connect customer equipment to the port of a DS3 FP through the coaxial cable connectors on the faceplate.

Before setting up sparing, check the product equipment codes (PECs) on the faceplates of both the active and spare FPs. The first six digits (four letters and two numbers) of the PECs must match.

For more information about the DS3/E3 termination panels, see “DS3 or E3 termination panels” (page 66).

1-port DS3 cable assembly

The maximum cable length for DS3 lines to customer equipment is 325 m (1000 ft). The distance between the FP and the termination panel is part of the total length.

To meet EMC requirements, ensure that any cables you connect from a DS3 FP or termination panel to customer equipment are of type NT734.

Table 84
1-port DS3 cable assembly parts

Quantity	Item	Description
1	NT-734 or comparable cable with double shielded construction	75–Ω coaxial cable
2	Specialty Connector Company 28P387-1	75–Ω straight BNC plug

For more information, see “Cables” (page 89).

1-port DS3 pinouts

This table identifies the pinouts and signal names for the DS3 D-type connector.

Table 85
1-port DS3 card D-type connector pinouts and signal names

Pin number	Signal name
1	Logic ground
2	PSSTATUS
3	PSLOAD
4	PSREG0
5	PSREG1
6	Frame ground
7	PSREG2
8	PSREG3
9	Fused +12V

Trunk facility requirements

Within the Nortel Networks Multiservice Switch subnet, the end-to-end DS3 trunk facility must meet all of the following conditions:

- full, single clear-channel DS3
- structured or framed DS3
- used for non-subrate applications

For DS3 trunk facilities, C-bit parity is a provisionable option.

1-port DS3C function processor

See these sections for information about the 1-port DS3C function processor (FP):

- “1-port DS3C faceplate” (page 302)
- “1-port DS3C termination panels” (page 304)
- “1-port DS3C termination panels” (page 304)
- “1-port DS3C cable assembly” (page 304)
- “1-port DS3C pinouts” (page 305)

1-port DS3C faceplate

You can use the monitor port (Tx monitor) to connect to test equipment and test the card while it is in service. It carries a -26 dB tap of the transmit (Tx) connector signal. The 9-pin subminiature D-type connector provides one-for-one sparing capability.

Figure 93
1-port DS3C faceplate

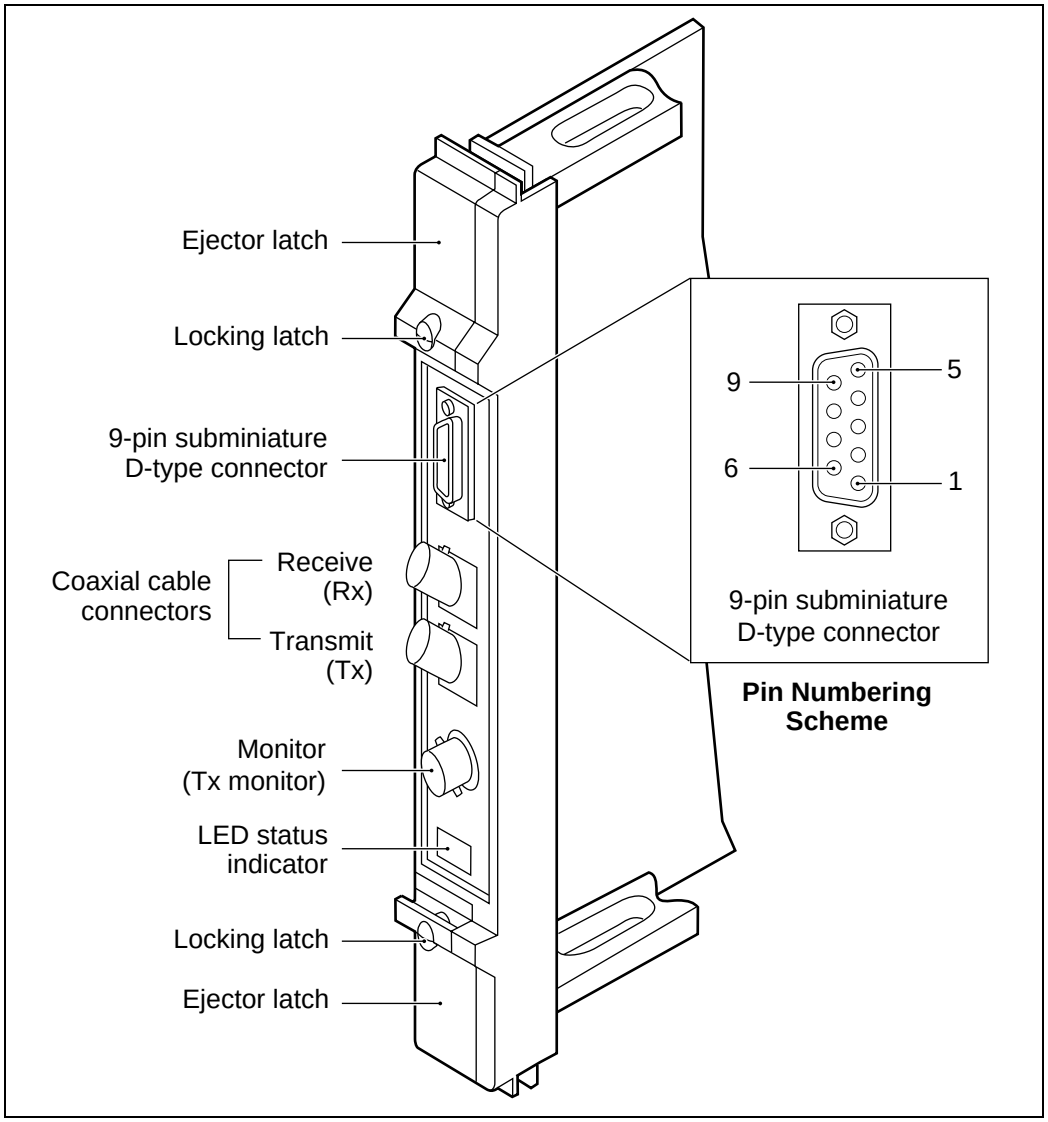

1-port DS3C termination panels

You can connect customer equipment to a 1-port DS3C FP using the DS3/E3 termination panels. These panels provide a break-out for customer equipment connections and support sparing.

The 1-port DS3C FP supports both one-for-one and one-for-*n* sparing where *n* is one to four. If you want to use one-for-one sparing, you can connect the spare FP using either a termination panel or a sparing panel. To protect multiple FPs with a single spare, use the DS3C one-for-n (1:n) sparing panel.

Before setting up sparing, check the PECs on the faceplates of both the active and spare FPs. The first six digits (four letters and two numbers) of the PECs must match.

CAUTION
Service interruption
Sparing requires all ports on the spare FP be connected to the termination or sparing panel sparing connectors, whether they are provisioned or not. Failure to do so will result in the termination or sparing panel dropping all ports on the spare FP.

For more information about the DS3 or E3 termination panels, see “DS3 or E3 termination panels” (page 66).

1-port DS3C cable assembly

The maximum cable length for DS3 lines to customer equipment is 325 m (1,000 ft). The distance between the FP and the termination panel is part of the total length.

Table 86
1-port DS3 cable assembly parts

Qty	Item	Description
1	NT-734 or comparable cable with double shielded construction	75-ohm coaxial cable
2	Specialty Connector Company 28P387-1	75-ohm straight BNC plug

For more information, see “Cables” (page 89).

1-port DS3C pinouts

This table identifies the pinouts and signal names for the D-type connector.

Table 87
DS3C FP connector pinouts and signal names

Pin number	Signal name
1	Logic ground
2	PSSTATUS
3	PSLOAD
4	PSREG0
5	PSREG1
6	Frame ground
7	PSREG2
8	PSREG3
9	Fused +12V

2-port DS3C TDM function processor

The PECs of the 2-port DS3C time division multiplexing (TDM) function processor (FP) are NTFN91 and NTFN93. The NTFN93 will be replacing the NTFN91 with the same functionality and deployment capabilities (for

example, an NTFN93 can replace an NTFN91 that is already in a sparing configuration). The card type (software name) is 2pDS3cAal. See these sections for information about the FPs:

- “2-port DS3C TDM faceplate” (page 306)
- “2-port DS3C TDM termination panels” (page 308)
- “2-port DS3C TDM cable assembly” (page 308)

2-port DS3C TDM faceplate

“2-port DS3C TDM faceplate” (page 307) shows the faceplate for the DS3C TDM FP. A small connector is available for one-for-one sparing capability.

Figure 94
2-port DS3C TDM faceplate

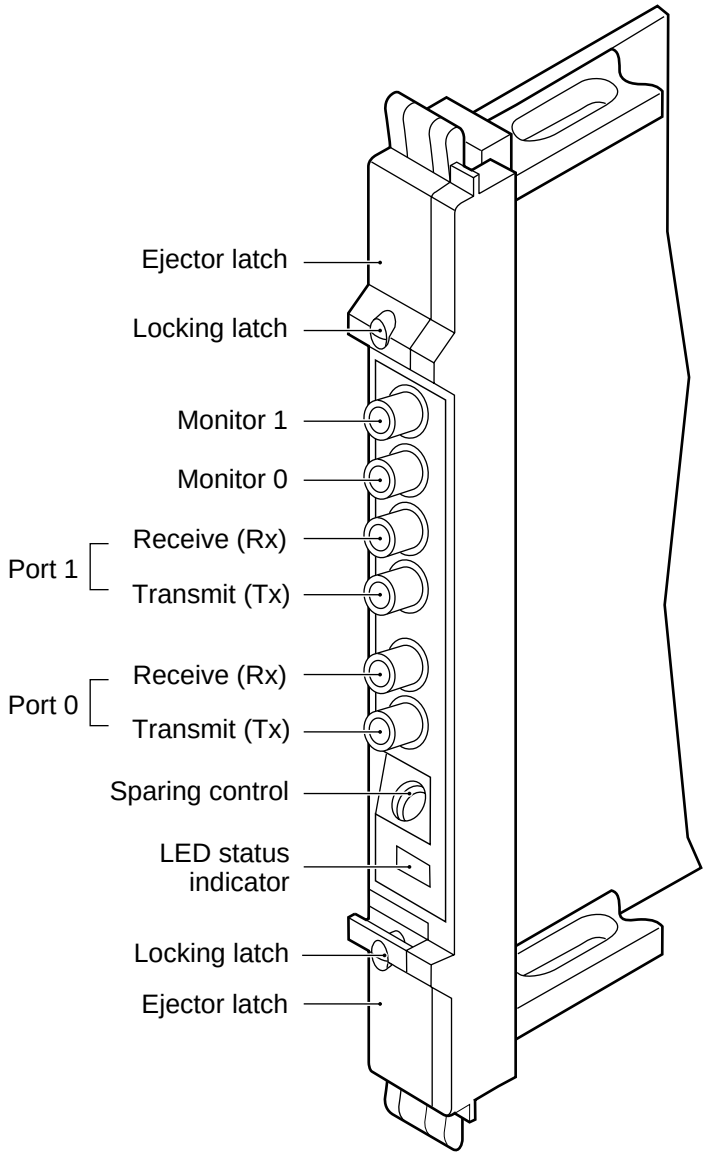

PPT 2172 001 AA

2-port DS3C TDM termination panels

You can connect customer equipment directly to the 2-port DS3C TDM FP or to its termination panel. The 2-port DS3C TDM FP uses the 19” DS3/E3/JT2 ATM termination panel. This termination panel supports one-for-one sparing.

> ***Note:*** The 2-port DS3C TDM FP does not use the 13” DS3/E3/JT2 ATM termination panel.

For more information about the DS2/E3/JT2 termination panel, see “DS3, E3, or JT2 ATM termination panels” (page 68).

2-port DS3C TDM cable assembly

The maximum cable length for DS3C lines to customer equipment is 325 m (1000 ft). The distance between the FP and the termination panel is part of the total length.

Table 88
2-port DS3C TDM cable assembly parts

Qty	Item	Description
2	NT-734 or comparable cable with double shielded construction	75-ohm coaxial cable
4	Specialty Connector Company 28P387-1 or comparable BNC connector	75-ohm straight BNC plug

For more information, see “Cables” (page 89).

3-port DS3 ATM function processor

See these sections for information about the 3-port DS3 ATM function processor (FP):

- “3-port DS3 ATM faceplate” (page 308)
- “3-port DS3 ATM termination panels” (page 310)
- “3-port DS3 ATM cable assembly” (page 310)

3-port DS3 ATM faceplate

A small DIN connector is available for one-for-one sparing capability.

Figure 95
3-port DS3 ATM faceplate

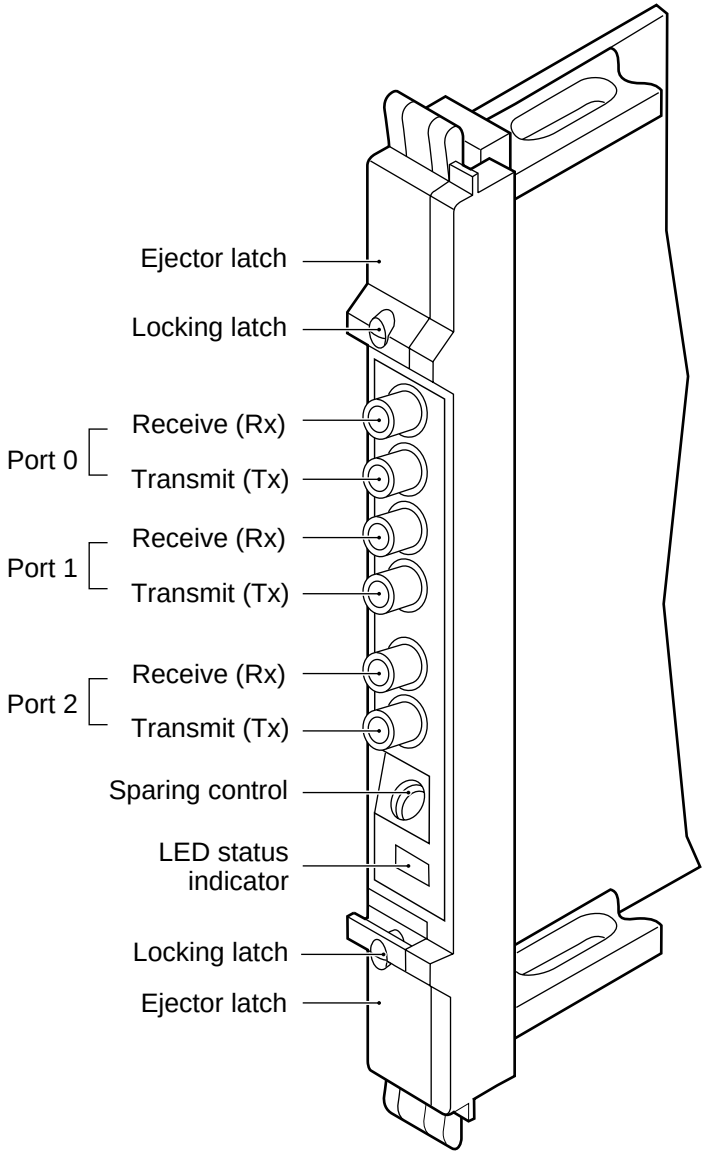

PPT 1063 001 AA

3-port DS3 ATM termination panels

You can connect customer equipment directly to the 3-port DS3 ATM FP or to its termination panel. The DS3 ATM FP uses the DS3/E3/JT3 ATM termination panels. These termination panels support sparing.

Before setting up sparing, check the seventh and eighth digits of the PECs of the main and spare FPs. If the digits are EA, you can only spare that FP with FPs of the same or later vintage. Earlier vintages (for example, BA and DA) can be spared with each other. The PEC is located on the faceplate of the FP.

The three ports on the right side of this termination panel are used for monitoring transmit output. This allows you to connect third-party equipment for testing and monitoring purposes.

For more information about the DS3/E3/JT2 ATM termination panels, see “DS3, E3, or JT2 ATM termination panels” (page 68).

3-port DS3 ATM cable assembly

The maximum cable length for DS3 lines to customer equipment is 325 m (1000 ft). The distance between the FP and the termination panel is part of the total length.

Table 89
3-port DS3 ATM cable assembly parts

Qty	Item	Description
2	NT-734 or comparable cable with double shielded construction	75-ohm coaxial cable
4	Specialty Connector Company 28P387-1 or comparable BNC connector	75-ohm straight BNC plug

For more information, see “Cables” (page 89).

3-port DS3 ATM IP function processor

See these sections for information about the 3-port DS3 ATM IP function processor (FP):

- “3-port DS3 ATM IP faceplate” (page 311)

- “3-port DS3 ATM IP termination panels” (page 313)
- “3-port DS3 ATM cable assembly” (page 310)

3-port DS3 ATM IP faceplate

A small DIN connector is available for one-for-one sparing capability.

Figure 96
3-port DS3 ATM IP faceplate

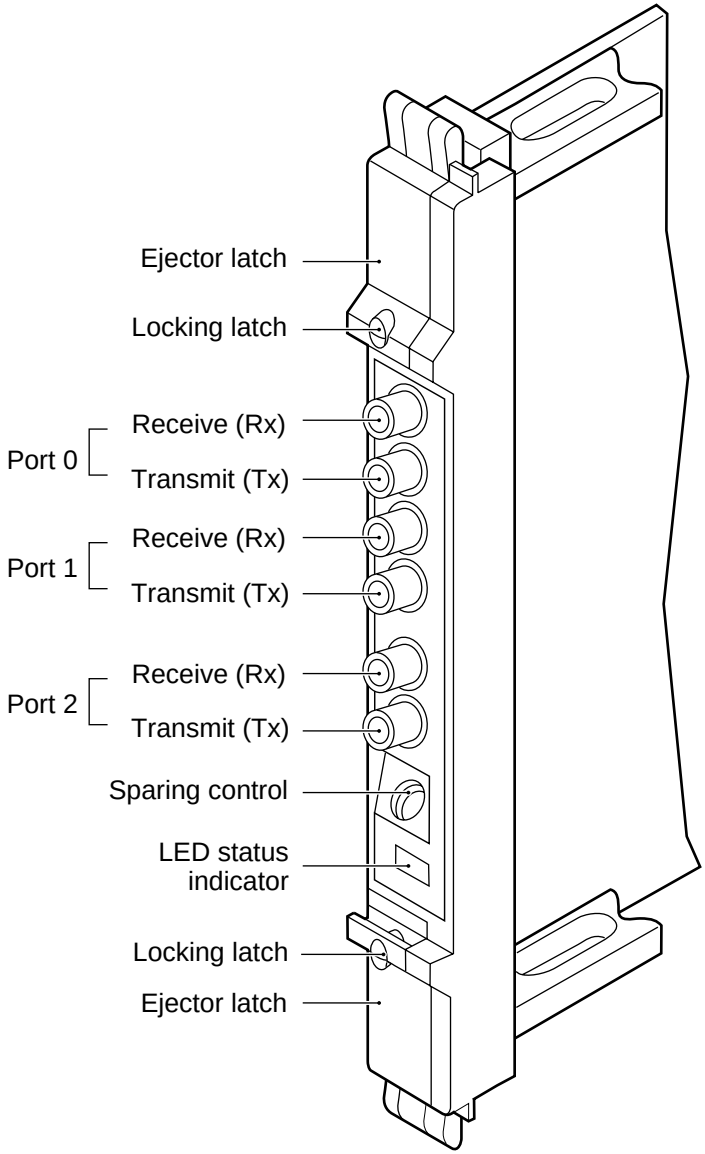

PPT 1063 001 AA

3-port DS3 ATM IP termination panels

You can connect customer equipment directly to the 3-port DS3 ATM IP or to its termination panel. The DS3 ATM IP FP uses the DS3/E3/JT3 ATM termination panels. These termination panels support sparing.

Before setting up sparing, ensure all eight digits of the product equipment codes (PECs) of the main and spare FPs match.

For more information about the DS3/E3/JT3 ATM termination panels, see “DS3, E3, or JT2 ATM termination panels” (page 68).

3-port DS3 ATM IP cable assembly

The maximum cable length for DS3 ATM IP lines to customer equipment is 325 m (1000 ft). The distance between the FP and the termination panel is part of the total length.

Table 90
3-port DS3 ATM IP cable assembly parts

Qty	Item	Description	Maximum length
2	NT-734 or comparable cable with double-shielded construction	75-ohm coaxial cable	325 m (1000 ft)
4	Specialty Connector Company 28P387-1 or comparable BNC connector	75-ohm straight BNC plug	

For more information, see “Cables” (page 89).

Chapter 13
E1 function processors

Voice services are supported by the following Nortel Networks Multiservice Switch E1 function processors (FPs):

- “1-port E1 MVP-E function processor” (page 316)
- “4-port E1 MVP-E function processor” (page 320)

Frame-based services are supported by the following Multiservice Switch E1 FPs:

- “4-port E1 function processor” (page 326)
- “4-port E1C function processor” (page 331)

ATM services are supported by the following Multiservice Switch E1 FPs:

- “3-port E1 ATM function processor” (page 336)
- “4-port E1 AAL1 function processor” (page 341)
- “8-port E1 ATM function processor” (page 346)
- “32-port E1 TDM function processor” (page 354)

Multiple services are supported by the following Multiservice Switch E1 FPs:

- “32-port E1 MSA 1-slot function processors” (page 362)
- “32-port E1 MSA 2-slot function processors” (page 384)

1-port E1 MVP-E function processor

See these sections for information about the 1-port E1 Multipurpose Voice Platform with enhanced echo cancellation (MVP-E) function processor (FP):

- “1-port E1 MVP-E faceplate” (page 316)
- “1-port E1 MVP-E termination panels” (page 318)
- “1-port E1 MVP-E balanced cable assembly” (page 318)
- “1-port E1 MVP-E unbalanced cable assembly” (page 318)
- “1-port E1 MVP-E pinouts” (page 319)

1-port E1 MVP-E faceplate

This figure shows an E1 MVP-E faceplate.

Figure 97
1-port E1 MVP-E faceplate

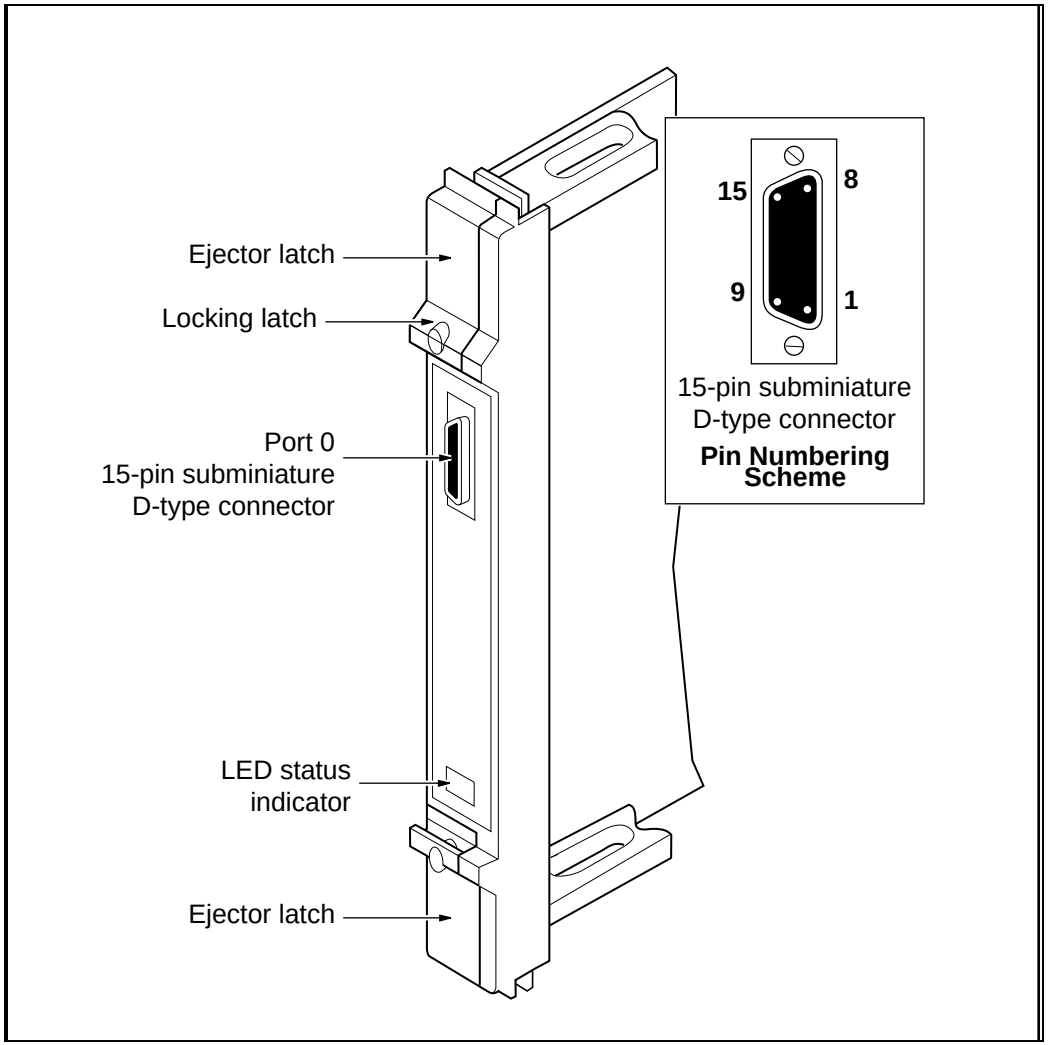

1-port E1 MVP-E termination panels

The 1-port E1 MVP-E FP uses the DS1/E1 (balanced) and the E1 unbalanced termination panels. These panels provide a break-out for customer-equipment connections so that each E1 port has its own termination point and access. The DS1/E1 (balanced) and the E1 unbalanced termination panels support sparing.

For more information on the DS1/E1 termination panels, see “DS1 or E1 termination panels” (page 65). For more information about the E1 unbalanced termination panels, see “E1 unbalanced termination panels” (page 71).

1-port E1 MVP-E balanced cable assembly

The maximum cable length for balanced lines to customer equipment is 230 m (750 ft). The distance between the FP and the termination panel is part of the total length.

Table 91
1-port E1 MVP-E cable assembly parts

Qty	Item	Description
	Belden 8138	Cable, 120 ohm, 8 twisted pairs, 28-gauge strand
2	NT A0380877	AMP 205206-3, connector housing, 15-pin D-sub, male, tin plated, with grounding indents
6	NT A0279330	AMP 66507-9 pin for above, 24- to 28-gauge wire
2	NT A0361050	AMP 747099-3 straight hood kit, 15-pin D-sub
4	NT P0180927	0.112-40 x 0.5” pan-head machine screw
4	NT P0387666	0.115” spring washer

For more information, see “Cables” (page 89).

1-port E1 MVP-E unbalanced cable assembly

The maximum cable length for unbalanced lines to customer equipment is 750 m (2400 ft). The distance between the FP and the termination panel is part of the total length.

Table 92
1-port E1 MVP-E cable assembly parts

Qty	Item	Description
	NT-734 or equivalent	75-ohm coaxial cable
1	Specialty Connector Company 28P387-1	75-ohm straight BNC plug

For more information, see “Cables” (page 89).

1-port E1 MVP-E pinouts

Table 93
1-port E1 MVP-E connector P0 pinout and signal names

Pin number	Signal name
7	Receive +
8	Transmit +
14	Receive -
15	Transmit -
1	Protection switch register bit 0
9	Protection switch register bit 1
2	Protection switch register bit 2
10	Protection switch register bit 3
3	No connection
5	Signal ground
4	+12 V dc
11	Signal ground
12	Frame ground
6	Protection switch load
13	Protection switch status

Figure 98
E1 termination panel pinouts and signal names

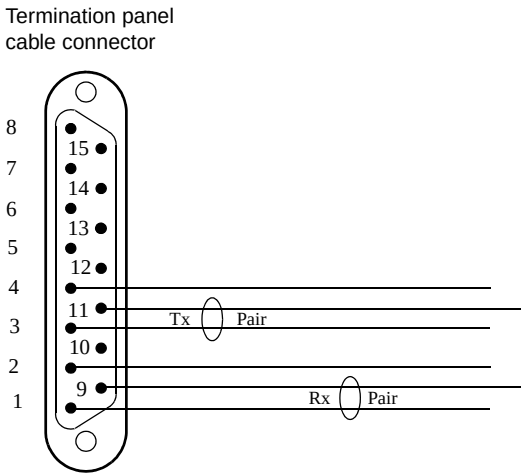

Pin	Name
1	Receive +
2	Frame Ground
3	Transmit +
4	Frame Ground
9	Receive -
11	Transmit -

4-port E1 MVP-E function processor

See these sections for information about the 4-port E1 Multipurpose Voice Platform with enhanced echo cancellation (MVP-E) function processor (FP):

- “4-port E1 MVP-E faceplate” (page 320)
- “4-port E1 MVP-E termination panels” (page 322)
- “4-port E1 MVP-E balanced cable assembly” (page 322)
- “4-port E1 MVP-E pinouts” (page 323)

4-port E1 MVP-E faceplate

You can use the monitor ports (MON 0 and MON 1) to connect to test equipment and test the card while it is in service. It carries a -26 dB tap of the transmit (Tx) connector signal. The 9-pin subminiature D-type connector provides one-for-one sparing capability.

Figure 99
4-port E1 MVP-E faceplate

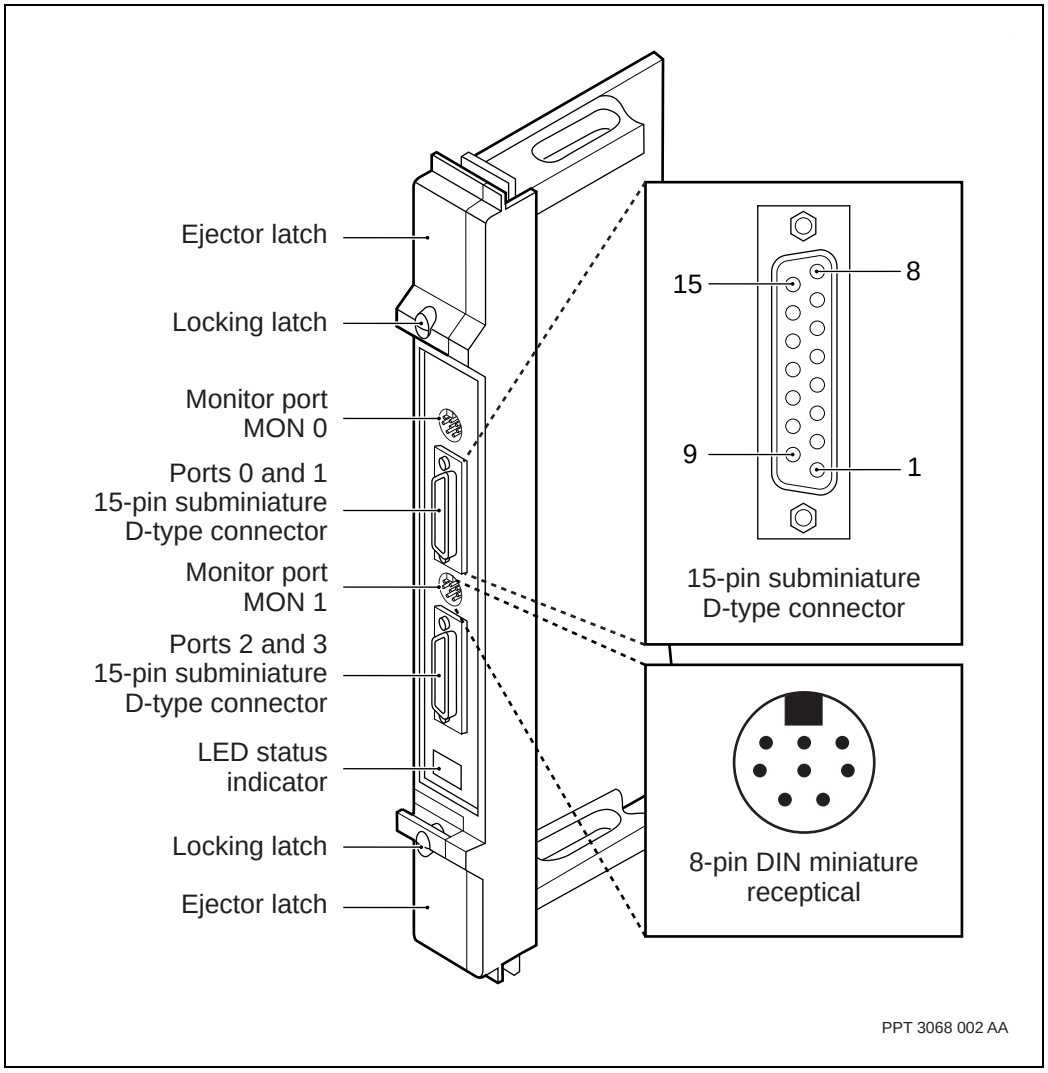

4-port E1 MVP-E termination panels

The 4-port E1 MVP-E FP uses the DS1/E1 (balanced) and the E1 unbalanced termination panels. These panels provide a break-out for customer-equipment connections so that each E1 port has its own termination point and access. The DS1/E1 (balanced) and the E1 unbalanced termination panels support sparing.

For more information on the DS1/E1 termination panels, see “DS1 or E1 termination panels” (page 65). For more information about the E1 unbalanced termination panels, see “E1 unbalanced termination panels” (page 71).

4-port E1 MVP-E balanced cable assembly

The maximum cable length for balanced E1 lines to customer equipment is 230 m (750 ft.). The distance between the FP and the termination panel is part of the total length.

Table 94
Balanced 4-port E1 MVP-E cable assembly parts

Qty	Item	Description
	Belden 8138	cable, 120-ohm, 8 twisted pairs, 28-gauge (0.32 mm) strand
2	NT A0380877	AMP 205206-3, connector housing, 15-pin D-sub, male, tin plated, with grounding indents
12	NT A0279330	AMP 66507-9 pin for above, 24- to 28-gauge (0.51 to 0.32 mm) wire
2	NT A0361050	AMP 747099-3 straight hood kit, 15-pin D-sub
4	NT P0180927	0.112-40 x 0.5” pan head machine screw
4	NT P0387666	0.115” spring washer

For more information, see “Cables” on page 89.

4-port E1 MVP-E unbalanced cable assembly

The maximum cable length for unbalanced E1 lines to customer equipment is 750 m (2400 ft.). The insertion loss of each pair must not exceed 6 dB measured at 1024 kHz for E1. Insertion loss is proportional to cable length and varies from one type of cable to another.

Table 95
Unbalanced 4-port E1 MVP-E cable assembly parts

Qty	Item	Description
	NT-734 or equivalent	75-ohm coaxial cable
2	Specialty Connector Company 28P387-1	75-ohm straight BNC plug

For more information about cables, see “Cables” (page 89).

4-port E1 MVP-E pinouts

See the following for information on specific connectors:

- “4-port E1 MVP-E connector P0 pinout and signal names” (page 323)
- “4-port E1 MVP-E connector P1 pinout and signal names” (page 324)
- “4-port E1 MVP-E faceplate monitor pinout and signal names” (page 325)
- “E1 termination panel pinout and signal names” (page 325)

Table 96
4-port E1 MVP-E connector P0 pinout and signal names

Pin number	Signal name
8	Port 0, Transmit +
15	Port 0, Transmit -
7	Port 0, Receive +
14	Port 0, Receive -
1	Port 1, Transmit +
9	Port 1, Transmit -
2	Port 1, Receive +
10	Port 1, Receive -
6	Protection Switch Load
13	Protection Switch Status
(Sheet 1 of 2)	

Table 96 (continued)
4-port E1 MVP-E connector P0 pinout and signal names

Pin number	Signal name
3	No connection
11	Signal Ground
4	+12 V dc
5	Signal ground
12	No connection
(Sheet 2 of 2)	

Table 97
4-port E1 MVP-E connector P1 pinout and signal names

Pin number	Signal name
8	Port 2, Transmit +
15	Port 2, Transmit -
7	Port 2, Receive +
14	Port 2, Receive -
1	Port 3, Transmit +
9	Port 3, Transmit -
2	Port 3, Receive +
10	Port 3, Receive -
6	Protection Switch Load
13	Protection Switch Status
3	No connection
11	Signal ground
4	+12 V dc
5	Signal ground
12	No connection

Figure 100
4-port E1 MVP-E faceplate monitor pinout and signal names

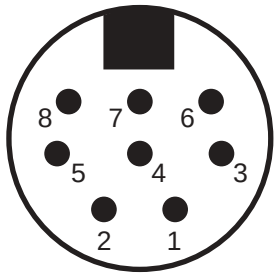

Pin	Name
1	Port n: Transmit +
2	Port n: Transmit -
3	Port n: Receive +
4	Port n: Receive -
5	Port n+1: Trasmit +
6	Port n+1: Transmit -
7	Port n+1: Receive +
8	Port n+1: Receive -

PPT 3068 001 AA

Figure 101
E1 termination panel pinout and signal names

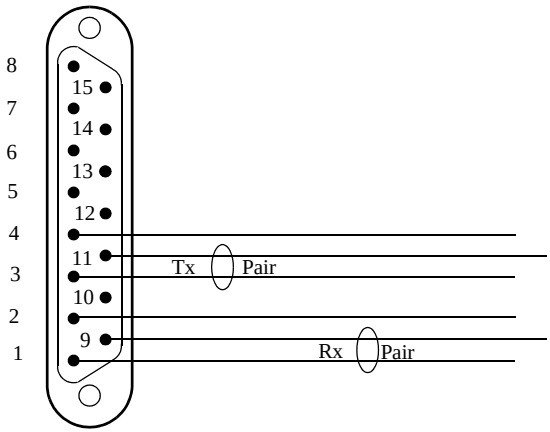

Pin	Name
1	Receive +
2	Frame Ground
3	Transmit +
4	Frame Ground
9	Receive -
11	Transmit -

To customer equipment

4-port E1 function processor

See these sections for information about the 4-port E1 function processor (FP):

- “4-port E1 faceplate” (page 327)
- “4-port E1 termination panels” (page 328)
- “4-port E1 balanced cable assembly” (page 328)
- “4-port E1 unbalanced cable assembly” (page 329)
- “4-port E1 pinouts” (page 329)

4-port E1 faceplate

Figure 102
4-port E1 faceplate

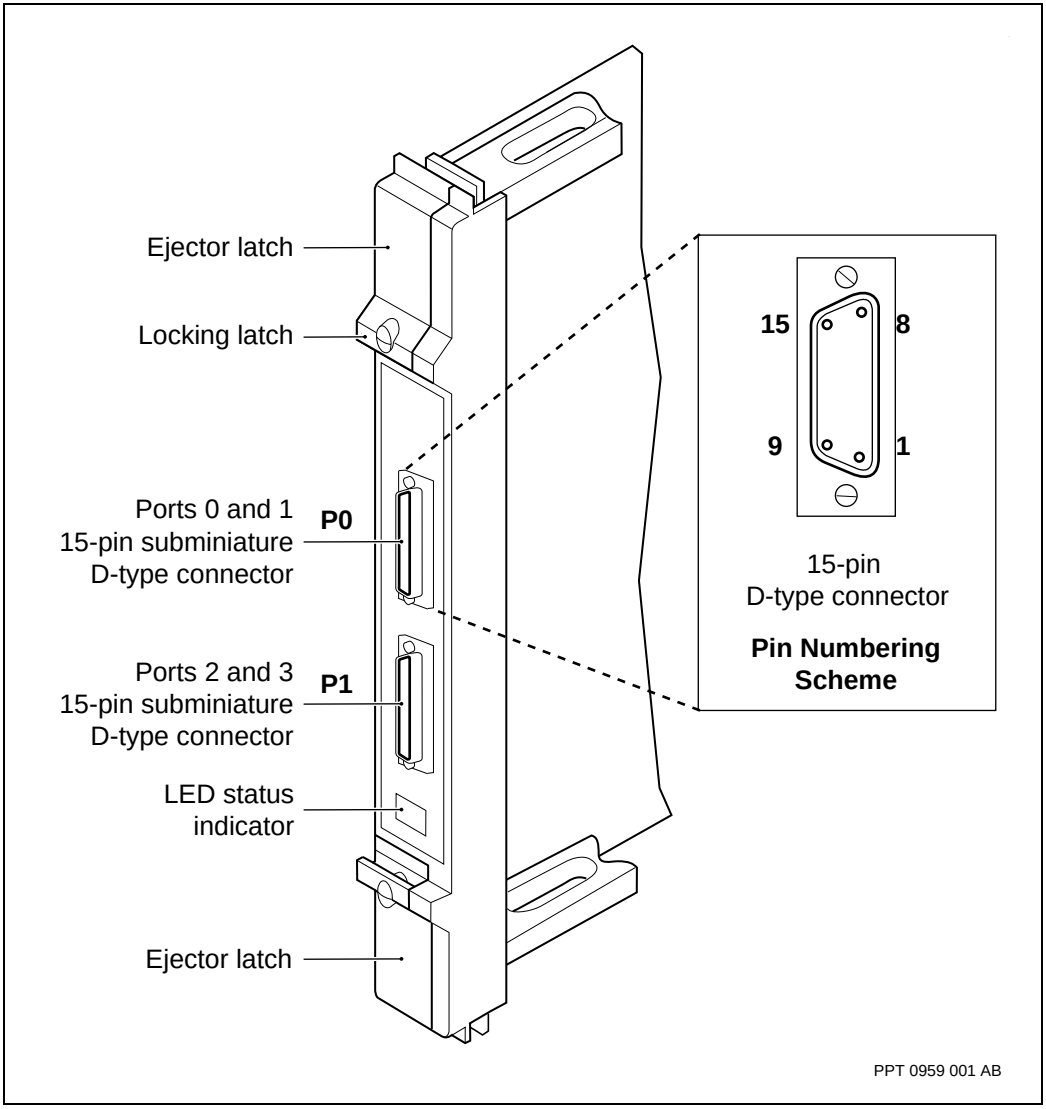

4-port E1 termination panels

The 4-port E1 FP uses the DS1/E1 (balanced) and the E1 unbalanced termination panels. These panels provide a break-out for customer-equipment connections so that each E1 port has its own termination point and access. The DS1/E1 (balanced) and the E1 unbalanced termination panels support sparing.

For more information on the DS1/E1 termination panels, see “DS1 or E1 termination panels” (page 65). For more information about the E1 unbalanced termination panels, see “E1 unbalanced termination panels” (page 71).

Before setting up sparing, check the product equipment codes (PECs) on the faceplates of both the active and spare FPs. The first six digits (four letters and two numbers) of the PECs must match.

4-port E1 balanced cable assembly

The maximum cable length for balanced E1 lines to customer equipment is 230 m (750 ft). The distance between the FP and the termination panel is part of the total length.

Table 98
Balanced 4-port E1 cable assembly parts

Qty	Item	Description
	Belden 8138	cable, 120-ohm, 8 twisted pairs, 28-gauge (0.32 mm) strand
2	NT A0380877	AMP 205206-3, connector housing, 15-pin D-sub, male, tin plated, with grounding indents
12	NT A0279330	AMP 66507-9 pin for above, 24- to 28-gauge (0.51 to 0.32 mm) wire
2	NT A0361050	AMP 747099-3 straight hood kit, 15-pin D-sub
4	NT P0180927	0.112-40 x 0.5” pan head machine screw
4	NT P0387666	0.115” spring washer

For more information, see “Cables” (page 89).

4-port E1 unbalanced cable assembly

The maximum cable length for unbalanced E1 lines to customer equipment is 750 m (2400 ft). The insertion loss of each pair must not exceed 6 dB measured at 1024 kHz for E1. Insertion loss is proportional to cable length and varies from one type of cable to another.

Table 99
Unbalanced 4-port E1 cable assembly parts

Qty	Item	Description
	NT-734 or equivalent	75-ohm coaxial cable
2	Specialty Connector Company 28P387-1	75-ohm straight BNC plug

For more information about cables, see “Cables” (page 89).

4-port E1 pinouts

See these sections for information on specific connectors:

- “4-port E1 connector P0 pinout and signal names” (page 329)
- “4-port E1 connector P1 pinout and signal names” (page 330)
- “E1 termination panel pinout and signal names” (page 325)

Table 100
4-port E1 connector P0 pinout and signal names

Pin number	Signal name
8	Port 0, Transmit +
15	Port 0, Transmit -
7	Port 0, Receive +
14	Port 0, Receive -
1	Port 1, Transmit +
9	Port 1, Transmit -
2	Port 1, Receive +
(Sheet 1 of 2)	

Table 100 (continued)
4-port E1 connector P0 pinout and signal names

Pin number	Signal name
10	Port 1, Receive -
6	Protection Switch Register Bit 0
13	Protection Switch Register Bit 1
3	Protection Switch Register Bit 2
11	Protection Switch Register Bit 3
4	No connection
5	Signal ground
12	Frame ground
(Sheet 2 of 2)	

Table 101
4-port E1 connector P1 pinout and signal names

Pin number	Signal name
8	Port 2, Transmit +
15	Port 2, Transmit -
7	Port 2, Receive +
14	Port 2, Receive -
1	Port 3, Transmit +
9	Port 3, Transmit -
2	Port 3, Receive +
10	Port 3, Receive -
6	Protection Switch Load
13	Protection Switch Status
3	No connection
11	Signal ground
4	+12 V dc
(Sheet 1 of 2)	

Table 101 (continued)
4-port E1 connector P1 pinout and signal names

Pin number	Signal name
5	Signal ground
12	Frame ground
(Sheet 2 of 2)	

Figure 103
E1 termination panel pinout and signal names

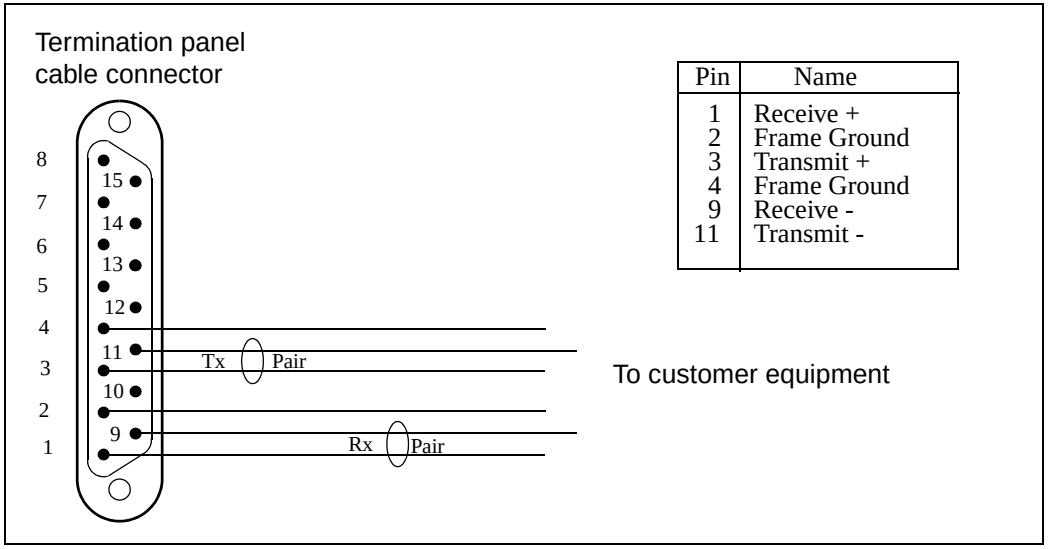

4-port E1C function processor

See the following sections for information about the 4-port E1C function processor (FP):

- “4-port E1C faceplate” (page 332)
- “4-port E1C termination panels” (page 333)
- “4-port E1C balanced cable assembly” (page 333)
- “4-port E1C unbalanced cable assembly” (page 334)
- “4-port E1C pinouts” (page 334)

4-port E1C faceplate

Figure 104
4-port E1C faceplate

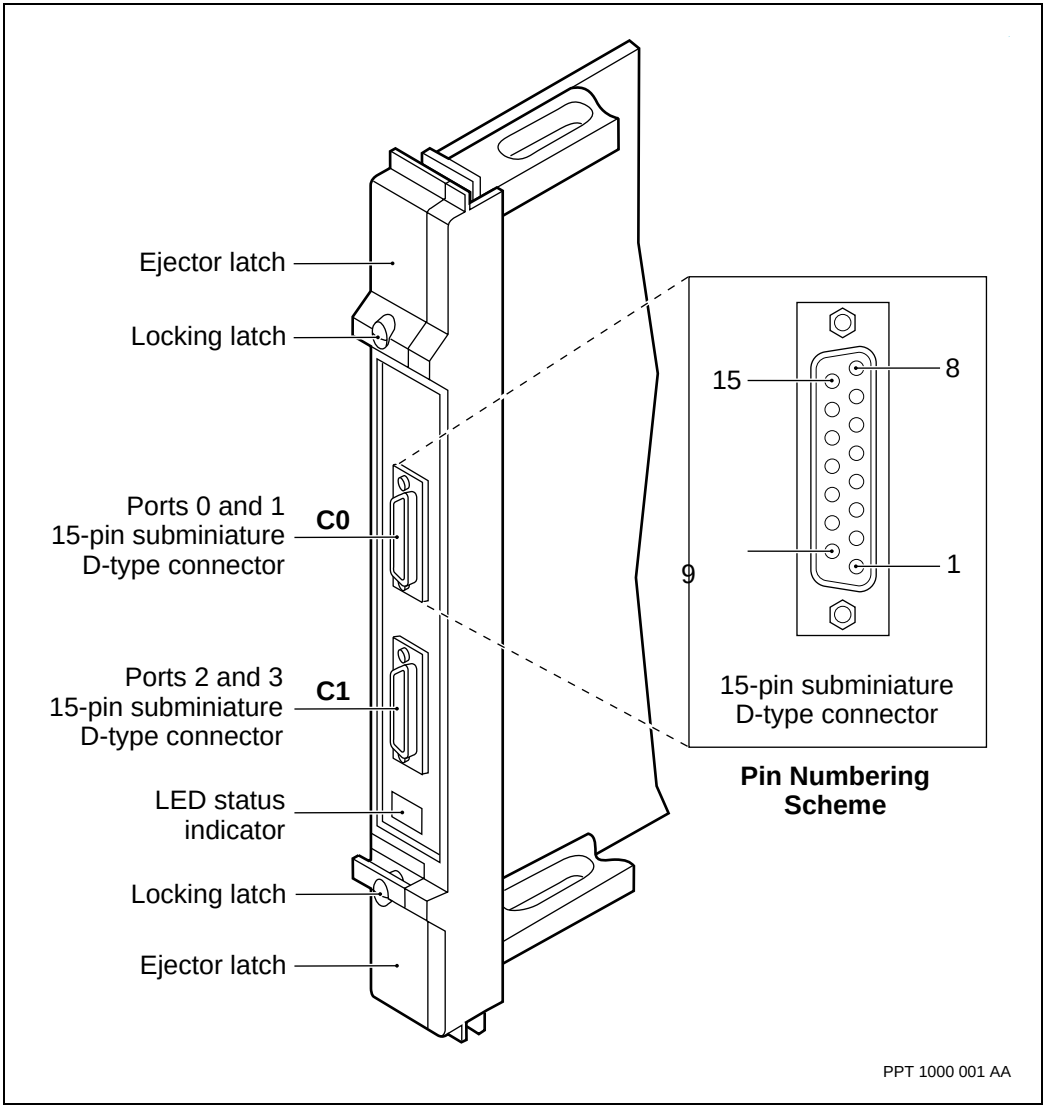

4-port E1C termination panels

The 4-port E1C FP uses the DS1/E1 (balanced) and the E1 unbalanced termination panels. These panels provide a break-out for customer-equipment connections so that each E1 port has its own termination point and access. The DS1/E1 (balanced) and the E1 unbalanced termination panels support sparing.

For more information on the DS1/E1 termination panels, see “DS1 or E1 termination panels” (page 65). For more information about the E1 unbalanced termination panels, see “E1 unbalanced termination panels” (page 71).

Before setting up sparing, check the product equipment codes (PECs) on the faceplates of both the active and spare FPs. The first six digits (four letters and two numbers) of the PECs must match.

4-port E1C balanced cable assembly

The maximum cable length for balanced E1 lines to customer equipment is 230 m (750 ft). The distance between the FP and the termination panel is part of the total length.

Table 102
Balanced 4-port E1C cable assembly parts

Qty	Item	Description
	Belden 8138	Cable, 120-ohm, 8 twisted pairs, 28-gauge (0.32 mm) strand
2	NT A0380877	AMP 205206-3, connector housing, 15-pin D-sub, male, tin plated, with grounding indents
12	NT A0279330	AMP 66507-9 pin for above, 24- to 28-gauge (0.51 to 0.32 mm) wire
2	NT A0361050	AMP 747099-3 straight hood kit, 15-pin D-sub
4	NT P0180927	0.112-40 x 0.5” pan head machine screw
4	NT P0387666	0.115” spring washer

For more information, see “Cables” (page 89).

4-port E1C unbalanced cable assembly

The maximum cable length for unbalanced E1 lines to customer equipment is 750 m (2400 ft). The insertion loss of each pair must not exceed 6 dB measured at 1024 kHz for E1. Insertion loss is proportional to cable length and varies from one type of cable to another.

Table 103
Unbalanced 4-port E1C cable assembly parts

Qty	Item	Description
	NT-734 or equivalent	75-ohm coaxial cable
2	Specialty Connector Company 28P387-1	75-ohm straight BNC plug

For more information, see “Cables” (page 89).

4-port E1C pinouts

See these sections for information on specific connectors:

- “4-port E1C connector C0 pinout and signal names” (page 334)
- “4-port E1C connector C1 pinout and signal names” (page 335)
- “E1 termination panel pinouts and signal names” (page 336)

Table 104
4-port E1C connector C0 pinout and signal names

Pin number	Signal name
8	Port 0, Transmit +
15	Port 0, Transmit -
7	Port 0, Receive +
14	Port 0, Receive -
1	Port 1, Transmit +
9	Port 1, Transmit -
(Sheet 1 of 2)	

Table 104 (continued)
4-port E1C connector C0 pinout and signal names

Pin number	Signal name
2	Port 1, Receive +
10	Port 1, Receive -
6	Protection Switch Register Bit 0
13	Protection Switch Register Bit 1
3	Protection Switch Register Bit 2
11	Protection Switch Register Bit 3
4	No connection
5	Signal ground
12	Frame ground
(Sheet 2 of 2)	

Table 105
4-port E1C connector C1 pinout and signal names

Pin number	Signal name
8	Port 2, Transmit +
15	Port 2, Transmit -
7	Port 2, Receive +
14	Port 2, Receive -
1	Port 3, Transmit +
9	Port 3, Transmit -
2	Port 3, Receive +
10	Port 3, Receive -
6	Protection Switch Load
13	Protection Switch Status
3	No connection
11	Signal ground
(Sheet 1 of 2)	

Table 105 (continued)
4-port E1C connector C1 pinout and signal names

Pin number	Signal name
4	+12 V dc
5	Signal ground
12	Frame ground
(Sheet 2 of 2)	

Figure 105
E1 termination panel pinouts and signal names

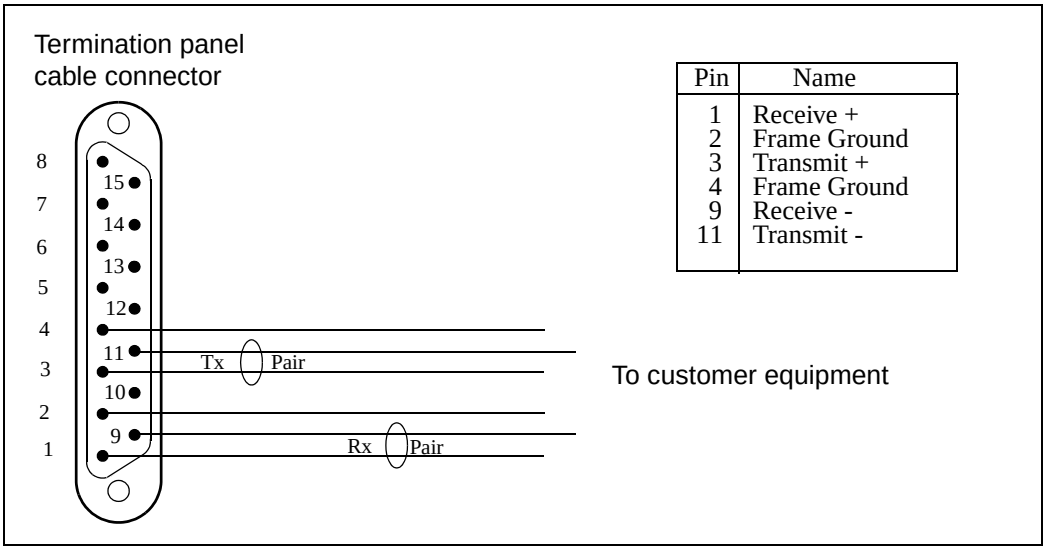

3-port E1 ATM function processor

See these sections for information about the 3-port E1 ATM function processor (FP):

- “3-port E1 ATM faceplate” (page 337)
- “3-port E1 ATM termination panels” (page 338)
- “3-port E1 ATM balanced cable assembly” (page 338)
- “3-port E1 ATM unbalanced cable assembly” (page 339)

• “3-port E1 ATM pinouts” (page 339)

3-port E1 ATM faceplate

This figure shows the faceplate for the 3-port E1 ATM FP.

Figure 106
3-port E1 ATM faceplate

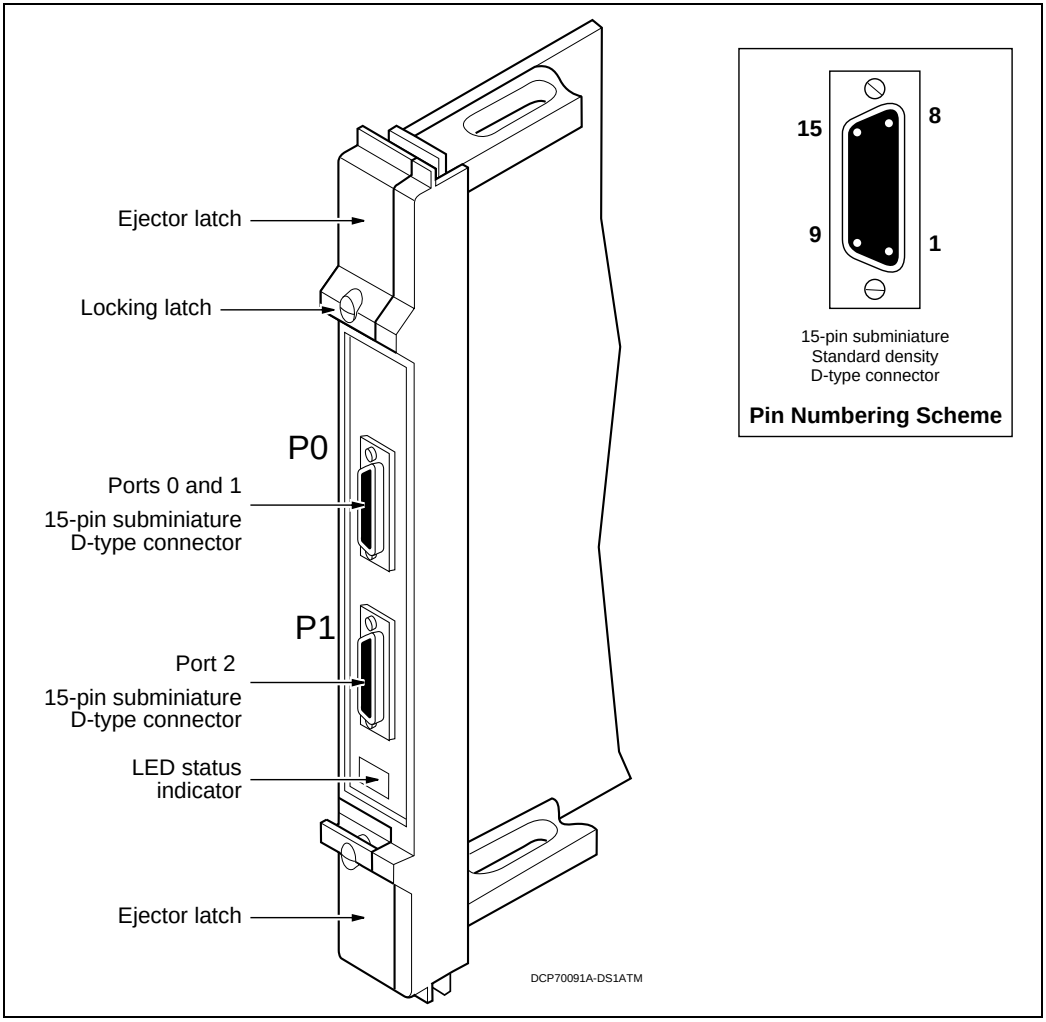

3-port E1 ATM termination panels

The 3-port E1 ATM FP uses the DS1/E1 (balanced) and the E1 unbalanced termination panels. These panels provide a break-out for customer-equipment connections so that each E1 port has its own termination point and access. The DS1/E1 (balanced) and the E1 unbalanced termination panels support sparing.

For more information on the DS1/E1 termination panels, see “DS1 or E1 termination panels” (page 65). For more information about the E1 unbalanced termination panels, see “E1 unbalanced termination panels” (page 71).

Before setting up sparing, check the seventh and eighth digits of the PECs of the main and spare FPs. If the digits are CA, you can only spare that FP with FPs of the same or later vintage. Earlier vintages (for example, AA and BB) can be spared with each other. The PEC is located on the faceplate of the FP.

3-port E1 ATM balanced cable assembly

The maximum cable length for balanced E1 lines to customer equipment is 230 m (750 ft). The distance between the FP and the termination panel is part of the total length.

Table 106
3-port E1 ATM balanced cable assembly parts

Qty	Item	Description
	Belden 8138	cable, 120 ohm, 8 twisted pairs, 28-gauge (0.32 mm) strand
2	NT A0380877	AMP 205206-3, connector housing, 15-pin D-sub, male, tin plated, with grounding indents
12	NT A0279330	AMP 66507-9 pin for above, 24- to 28-gauge (0.51 to 0.32 mm) wire
2	NT A0361050	AMP 747099-3 straight hood kit, 15-pin D-sub
4	NT P0180927	0.112-40 x 0.5” pan head machine screw
4	NT P0387666	0.115” spring washer

For more information, see “Cables” (page 89).

3-port E1 ATM unbalanced cable assembly

The maximum cable length for unbalanced E1 lines to customer equipment is 750 m (2400 ft). The insertion loss of each pair must not exceed 6 dB measured at 1024 kHz for E1. Insertion loss is proportional to cable length and varies from one type of cable to another.

Table 107
3-port E1 ATM unbalanced cable assembly parts

Qty	Item	Description
	NT-734 or equivalent	75-ohm coaxial cable
2	Specialty Connector Company 28P387-1	75-ohm straight BNC plug

For more information, see “Cables” (page 89).

3-port E1 ATM pinouts

See these sections for information about specific connectors:

- “3-port E1 ATM connector P0 pinout and signal names” (page 339)
- “3-port E1 ATM connector P1 pinout and signal names” (page 340)
- “E1 termination panel pinouts and signal names” (page 341)

Table 108
3-port E1 ATM connector P0 pinout and signal names

Pin number	Signal name
8	Port 0, Transmit +
15	Port 0, Transmit -
7	Port 0, Receive +
14	Port 0, Receive -
1	Port 1, Transmit +
9	Port 1, Transmit -
2	Port 1, Receive +
(Sheet 1 of 2)	

Table 108 (continued)
3-port E1 ATM connector P0 pinout and signal names

Pin number	Signal name
10	Port 1, Receive -
6	Protection Switch Register Bit 0
13	Protection Switch Register Bit 1
3	Protection Switch Register Bit 2
11	Protection Switch Register Bit 3
4	No connection
5	Signal ground
12	Frame ground
(Sheet 2 of 2)	

Table 109
3-port E1 ATM connector P1 pinout and signal names

Pin number	Signal name
8	Port 2, Transmit +
15	Port 2, Transmit -
7	Port 2, Receive +
14	Port 2, Receive -
1	No connection
9	No connection
2	No connection
10	No connection
6	Protection Switch Load
13	Protection Switch Status
3	No connection
11	Signal ground
4	+12 V dc
(Sheet 1 of 2)	

Table 109 (continued)
3-port E1 ATM connector P1 pinout and signal names

Pin number	Signal name
5	Signal ground
12	Frame ground
(Sheet 2 of 2)	

Figure 107
E1 termination panel pinouts and signal names

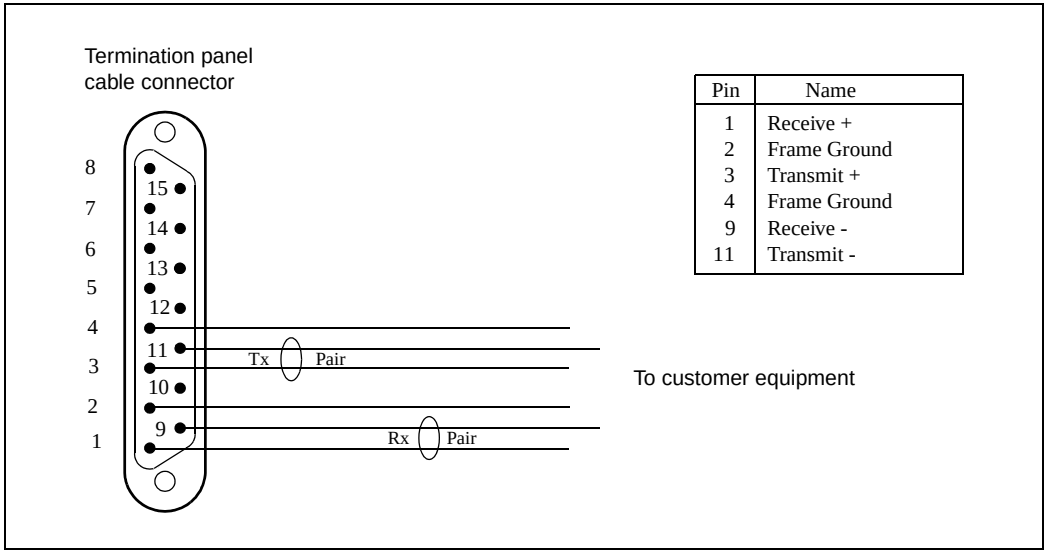

4-port E1 AAL1 function processor

See these sections for information about the 4-port E1 AAL1 function processor (FP):

- “4-port E1 AAL1 faceplate” (page 342)
- “4-port E1 AAL1 termination panels” (page 343)
- “4-port E1 AAL1 balanced cable assembly” (page 343)
- “4-port E1 AAL1 unbalanced cable assembly” (page 344)
- “4-port E1 AAL1 pinouts” (page 344)

4-port E1 AAL1 faceplate

Figure 108
4-port E1 AAL1 faceplate and connectors

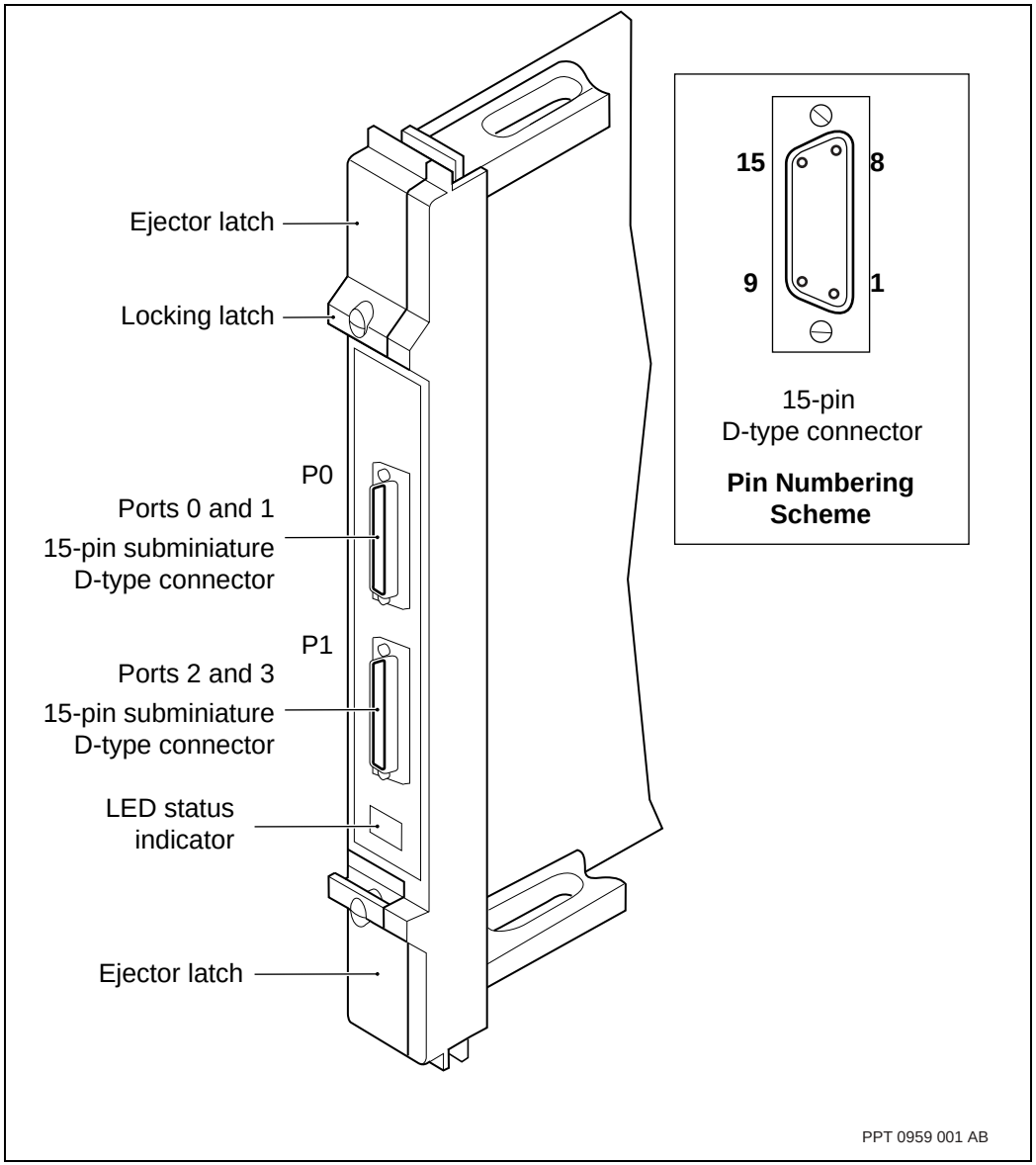

4-port E1 AAL1 termination panels

The 4-port E1 AAL1 FP uses the DS1/E1 (balanced) and the E1 unbalanced termination panels. These panels provide a break-out for customer-equipment connections so that each E1 port has its own termination point and access. The DS1/E1 (balanced) and the E1 unbalanced termination panels support sparing.

Before setting up sparing, check the seventh and eighth digits of the product equipment codes (PECs) of the main and spare FPs. If the digits are BA, you can only spare that FP with FPs of the same or later vintage. Earlier vintages (for example, AA and AC) can be spared with each other. The PEC is located on the faceplate of the FP.

For more information on the DS1/E1 termination panels, see “DS1 or E1 termination panels” (page 65). For more information about the E1 unbalanced termination panels, see “E1 unbalanced termination panels” (page 71).

4-port E1 AAL1 balanced cable assembly

The maximum cable length for E1 AAL1 lines to customer equipment is 230 m (750 ft). This length applies to 28-gauge (0.32 mm), 120-ohm cables. The insertion loss of each pair must not exceed 6 dB measured at 1024 kHz. Insertion loss is proportional to cable length and varies among types of cables. The distance between the FP and the termination panel is part of the total length.

Table 110
Recommended cable assembly for balanced 4-port E1 AAL1 lines

Qty	Item	Description
	Belden 8138	Cable, 120-ohm, 8 twisted pairs, 28-gauge (0.32 mm) strand
1	NT A0380877	AMP 205206-3, connector housing, 15-pin D-sub, male, tin plated, with grounding indents
5	NT A0279330	AMP 66507-9 pin for above, 24- to 28-gauge (0.51 to 0.32 mm) wire
1	NT A0361050	AMP 747099-3 Straight hood kit, 15-pin D-sub
2	NT P0180927	0.112-40 x 0.5” pan-head machine screw
2	NT P0387666	0.115” spring washer

4-port E1 AAL1 unbalanced cable assembly

The maximum cable length for unbalanced 4-port E1 AAL1 lines to customer equipment is 750 m (2400 ft). This length applies to NT-734 or equivalent cables. The insertion loss of each pair must not exceed 6 dB measured at 1024 kHz. Insertion loss is proportional to cable length and varies among types of cables. The distance between the FP and the termination panel is part of the total length.

Table 111
Recommended cable assembly parts for unbalanced 4-port E1 AAL1 lines

Qty	Item	Description
	NT-734	75-ohm coaxial cable with bounded shield
1	Specialty Connector Company 28P387-1	75-ohm straight BNC plug

4-port E1 AAL1 pinouts

See these sections for information about specific connectors:

- “4-port E1 AAL1 FP connector P0 pinout and signal names” (page 344)
- “4-port E1 AAL1 FP connector P1 pinout and signal names” (page 345)
- “Balanced E1 AAL1 termination panel connector pinout and signal names” (page 346)

Table 112
4-port E1 AAL1 FP connector P0 pinout and signal names

Pin number	Signal name
8	Port 0, Transmit +
15	Port 0, Transmit -
7	Port 0, Receive +
14	Port 0, Receive -
1	Port 1, Transmit +
(Sheet 1 of 2)	

Table 112 (continued)
4-port E1 AAL1 FP connector P0 pinout and signal names

Pin number	Signal name
9	Port 1, Transmit -
2	Port 1, Receive +
10	Port 1, Receive -
6	Protection Switch Register Bit 0
13	Protection Switch Register Bit 1
3	Protection Switch Register Bit 2
11	Protection Switch Register Bit 3
4	No connection
5	Signal ground
12	Frame ground
(Sheet 2 of 2)	

Table 113
4-port E1 AAL1 FP connector P1 pinout and signal names

Pin number	Signal name
8	Port 2, Transmit +
15	Port 2, Transmit -
7	Port 2, Receive +
14	Port 2, Receive -
1	Port 3 Transmit +
9	Port 3 Transmit -
2	Port 3 Receive +
10	Port 3 Receive -
6	Protection Switch Load
13	Protection Switch Status
3	+5V dc
(Sheet 1 of 2)	

Table 113 (continued)
4-port E1 AAL1 FP connector P1 pinout and signal names

Pin number	Signal name
11	Signal ground
4	+12 V dc
5	Signal ground
12	Frame ground
(Sheet 2 of 2)	

Figure 109
Balanced E1 AAL1 termination panel connector pinout and signal names

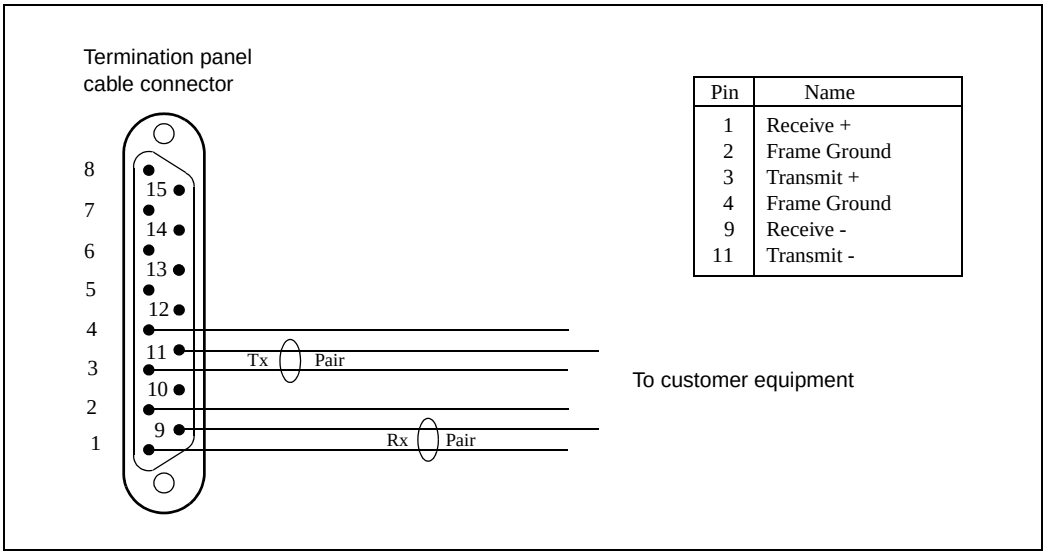

Pin	Name
1	Receive +
2	Frame Ground
3	Transmit +
4	Frame Ground
9	Receive -
11	Transmit -

8-port E1 ATM function processor

See these sections for information about the 8-port E1 function processor (FP):

- “8-port E1 ATM faceplate” (page 348)
- “8-port E1 ATM termination panels” (page 349)
- “8-port E1 ATM balanced cable assembly” (page 349)

- “8-port E1 ATM unbalanced cable assembly” (page 350)
- “8-port E1 ATM pinouts” (page 350)

8-port E1 ATM faceplate

Figure 110
8-port E1 ATM faceplate and connectors

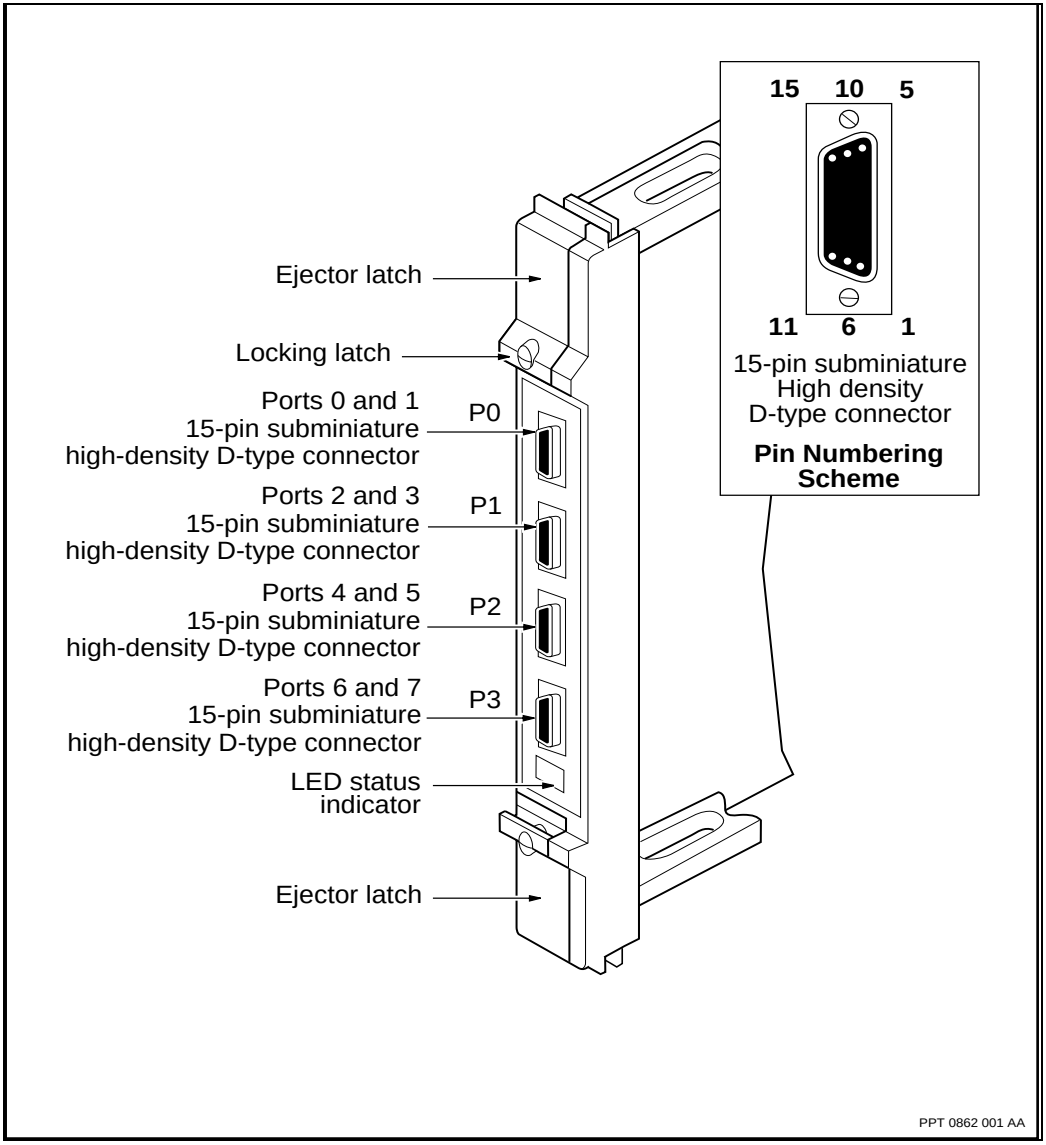

8-port E1 ATM termination panels

The 8-port E1 ATM FP uses the DS1/E1 (balanced) and the E1 unbalanced termination panels. These panels provide a break-out for customer-equipment connections so that each E1 port has its own termination point and access. The DS1/E1 (balanced) and the E1 unbalanced termination panels support sparing.

The 8-port E1 ATM FP uses one or two termination panels. One termination panel provides one-for-one sparing for up to four ports. You can spare ports 0–3, and 4–7. For example, a sparing configuration with three ports can use ports 0, 2, and 3, but not ports 0, 2, and 7. Only provision ports that you are going to use. To spare more than four ports, use two E1 termination panels.

Before setting up sparing, check the seventh and eighth digits of the PECs of the main and spare FPs. If the digits are CA, you can only spare that FP with FPs of the same or later vintage. Earlier vintages (for example, AA and BB) can be spared with each other. The PEC is located on the faceplate of the FP.

For more information on the DS1/E1 termination panels, see “DS1 or E1 termination panels” (page 65). For more information about the E1 unbalanced termination panels, see “E1 unbalanced termination panels” (page 71).

8-port E1 ATM balanced cable assembly

The maximum cable length for balanced E1 lines to customer equipment is 230 m (750 ft). The distance between the FP and the termination panel is part of the total length.

Table 114
8-port E1 ATM balanced cable assembly parts

Qty	Item	Description
	Belden 8138	Cable, 120-ohm, 8 twisted pairs, 28-gauge (0.32 mm) strand
2	NT A0380877	AMP 205206-3, connector housing, 15-pin D-sub, male, tin plated, with grounding indents
12	NT A0279330	AMP 66507-9 pin for above, 24- to 28-gauge (0.51 to 0.32) wire
2	NT A0361050	AMP 747099-3 straight hood kit, 15-pin D-sub

(Sheet 1 of 2)

Table 114 (continued)
8-port E1 ATM balanced cable assembly parts

Qty	Item	Description
4	NT P0180927	0.112-40 x 0.5” pan head machine screw
4	NT P0387666	0.115” spring washer
(Sheet 2 of 2)		

For more information, see “Cables” (page 89).

8-port E1 ATM unbalanced cable assembly

The maximum cable length for unbalanced E1 lines to customer equipment is 750 m (2400 ft). The insertion loss of each pair must not exceed 6 dB measured at 1024 kHz for E1. Insertion loss is proportional to cable length and varies from one type of cable to another.

Table 115
8-port E1 ATM unbalanced cable assembly parts

Qty	Item	Description
	NT-734 or equivalent	75-ohm coaxial cable
2	Specialty Connector Company 28P387-1	75-ohm straight BNC plug

For more information, see “Cables” (page 89).

8-port E1 ATM pinouts

See these sections for information about specific connectors:

- “8-port E1 ATM connector P0 pinout and signal names” (page 351)
- “8-port E1 ATM connector P1 pinout and signal names” (page 351)
- “8-port E1 ATM connector P2 pinout and signal names” (page 352)
- “8-port E1 ATM connector P3 pinout and signal names” (page 353)
- “E1 termination panel pinouts and signal names” (page 354)

Table 116
8-port E1 ATM connector P0 pinout and signal names

Pin number	Signal name
8	Port 0, Transmit +
15	Port 0, Transmit -
7	Port 0, Receive +
14	Port 0, Receive -
1	Port 1, Transmit +
9	Port 1, Transmit -
2	Port 1, Receive +
10	Port 1, Receive -
6	Protection Switch Register Bit 0
13	Protection Switch Register Bit 1
3	Protection Switch Register Bit 2
11	Protection Switch Register Bit 3
4	No connection
5	Signal ground
12	Frame ground

Table 117
8-port E1 ATM connector P1 pinout and signal names

Pin number	Signal name
8	Port 2, Transmit +
15	Port 2, Transmit -
7	Port 2, Receive +
14	Port 2, Receive -
1	Port 3, Transmit +
(Sheet 1 of 2)	

Table 117 (continued)
8-port E1 ATM connector P1 pinout and signal names

Pin number	Signal name
9	Port 3, Transmit -
2	Port 3, Receive +
10	Port 3, Receive -
6	Protection Switch Load
13	Protection Switch Status
3	No connection
11	Signal ground
4	+12 V dc
5	Signal ground
12	Frame ground
(Sheet 2 of 2)	

Table 118
8-port E1 ATM connector P2 pinout and signal names

Pin number	Signal name
8	Port 4, Transmit +
15	Port 4, Transmit -
7	Port 4, Receive +
14	Port 4, Receive -
1	Port 5, Transmit +
9	Port 5, Transmit -
2	Port 5, Receive +
10	Port 5, Receive -
6	Protection Switch Register Bit 0
13	Protection Switch Register Bit 1
3	Protection Switch Register Bit 2
(Sheet 1 of 2)	

Table 118
8-port E1 ATM connector P2 pinout and signal names

Pin number	Signal name
11	Protection Switch Register Bit 3
4	No connection
5	Signal ground
12	Frame ground
Shield	Frame ground
(Sheet 2 of 2)	

Table 119
8-port E1 ATM connector P3 pinout and signal names

Pin number	Signal name
8	Port 6, Transmit +
15	Port 6, Transmit -
7	Port 6, Receive +
14	Port 6, Receive -
1	Port 7, Transmit +
9	Port 7, Transmit -
2	Port 7, Receive +
10	Port 7, Receive -
6	Protection Switch Load
13	Protection Switch Status
3	No connection
11	Signal ground
4	+12 V dc
5	Signal ground
12	Frame ground
Shield	Frame ground

Figure 111
E1 termination panel pinouts and signal names

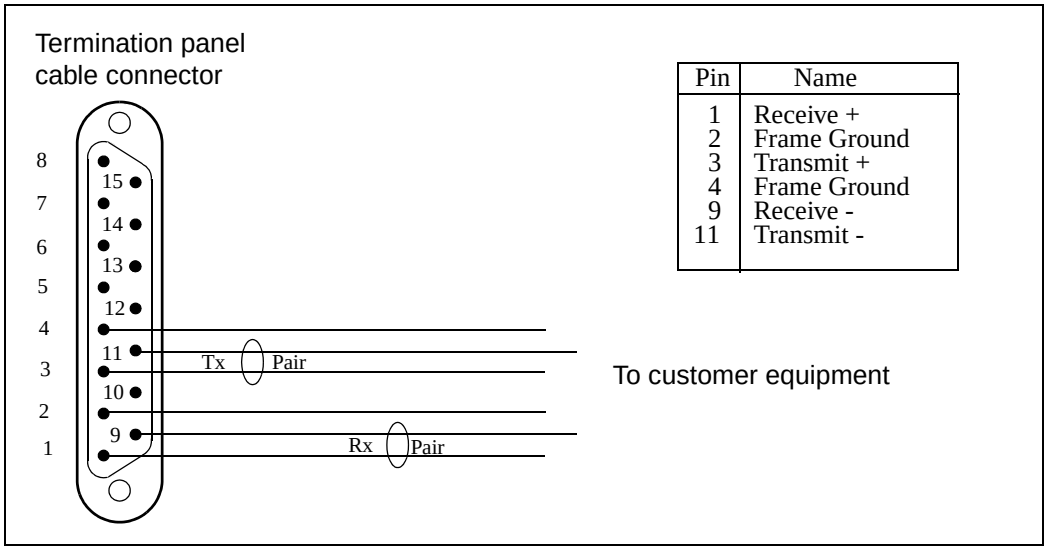

Pin	Name
1	Receive +
2	Frame Ground
3	Transmit +
4	Frame Ground
9	Receive -
11	Transmit -

32-port E1 TDM function processor

The PECs of the 32-port E1 time division multiplexing (TDM) function processor (FP) are NT0461 and NT0464. The NT0464 will be replacing the NT0461 with the same functionality and deployment capabilities (for example, an NT0464 can replace an NT0461 that is already in a sparing (protected) configuration). The card type (software name) is 2pDS3cAal. See these sections for information about the FPs:

- “32-port E1 TDM faceplate” (page 354)
- “32-port E1 TDM termination panels” (page 356)
- “32-port E1 TDM multiport aggregate device” (page 356)
- “32-port E1 TDM cable assembly” (page 361)

32-port E1 TDM faceplate

“32-port E1 TDM faceplate” (page 355) shows the faceplate for the 32-port E1 TDM FP. A small connector is available for one-for-one sparing capability.

Figure 112
32-port E1 TDM faceplate

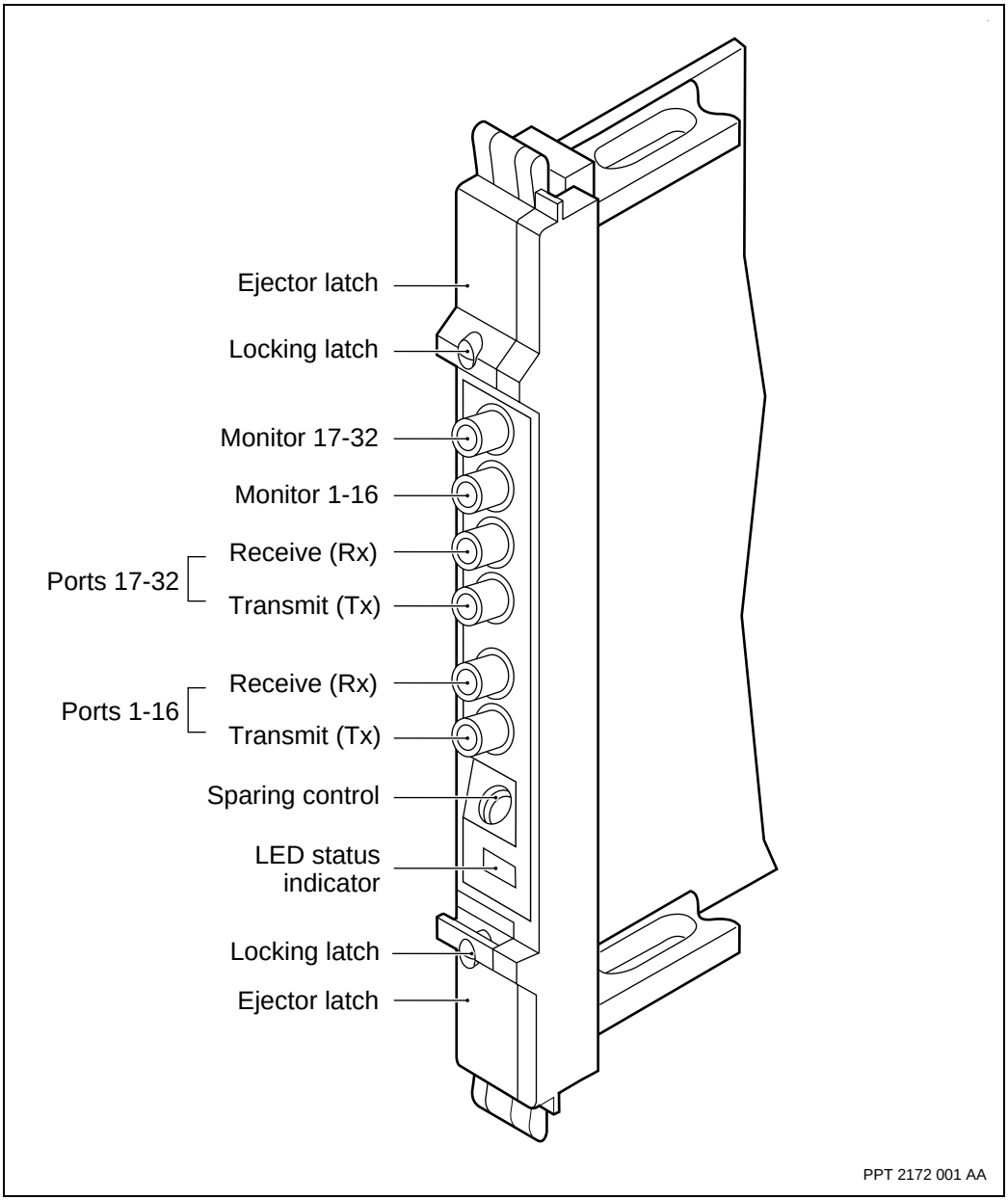

32-port E1 TDM termination panels

The 32-port E1 TDM uses the 19” DS3/E3/JT2 ATM termination panel. This termination panel support one-for-one sparing.

> ***Note:*** The 32-port E1 TDM FP does not use the 13” DS3/E3/JT2 ATM termination panel.

For more information about the DS3/E3/JT2 ATM termination panels, see “DS3, E3, or JT2 ATM termination panels” (page 68).

32-port E1 TDM multiport aggregate device

The 32-port E1 TDM FP uses a multiport aggregate device to break out the ports of the FP. Each multiport aggregate device provides individual access for 16 E1 ports. To break out all of the ports of a 32-port E1 TDM FP, you need two multiport aggregate devices.

The multiport aggregate device is 1-unit high and fits in a Nortel Networks Multiservice Switch or seismic cabinet, or a standard 19" rack. Dimensions for height, width, and depth are 4.4 cm x 43.2 cm x 26.8 cm (1.7 in. x 17.0 in. x 10.5 in.). The device weighs 2 kg (4.4 lb). See the figure “Balanced multiport aggregate device” (page 357) or “Unbalanced multiport aggregate device” (page 358).

For more information about the multiport aggregate device, see the following sections:

- “Multiport aggregate device connections and cabling” (page 358)
- “Multiport aggregate device power and grounding requirements” (page 359)
- “Multiport aggregate device LEDs” (page 360)
- “Multiport aggregate device alarms” (page 360)
- “Multiport aggregate device compliance” (page 360)

Figure 113
Balanced multiport aggregate device

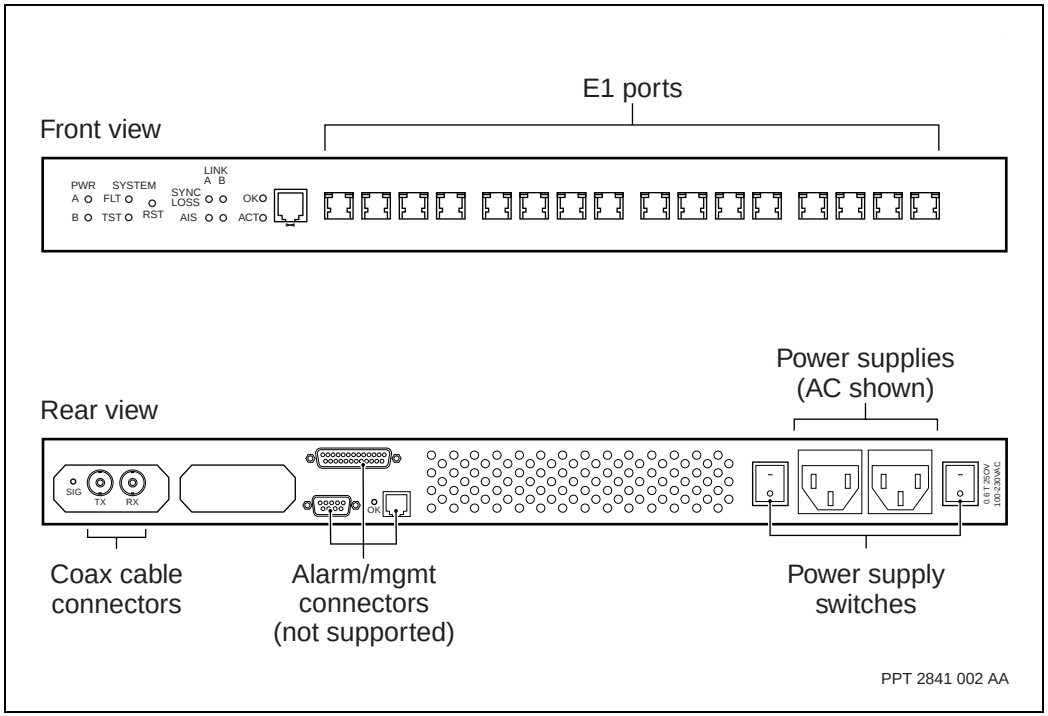

Figure 114
Unbalanced multiport aggregate device

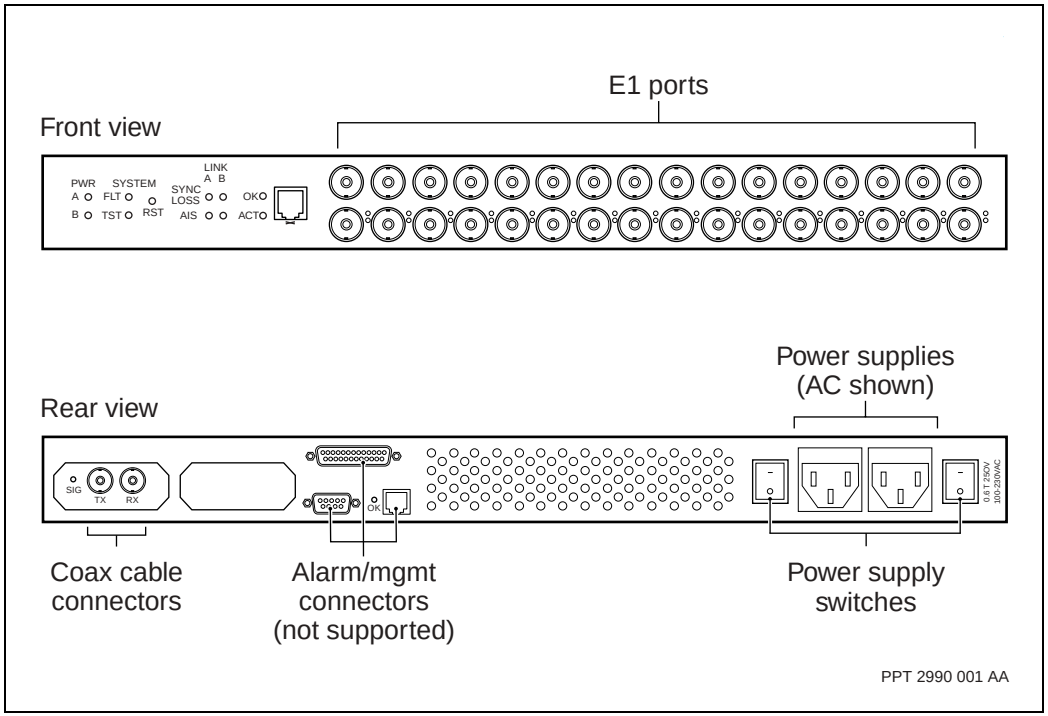

Multiport aggregate device connections and cabling

The multiport aggregate device provides coaxial (unbalanced) connections between the device and the FP or termination panel and RJ45 (120 ohm) connections or coaxial connections for each of the E1 ports. See the table “E1 RJ45 connector pinouts” (page 359).

The maximum cable length for balanced E1 lines to customer equipment is 230 m (750 ft).

The maximum cable length for unbalanced E1 lines to customer equipment is 750 m (2400 ft). The E1 balanced and unbalanced interface connections comply with ITU-T Recommendation G.703

Table 120
E1 RJ45 connector pinouts

Pin number	Signal name
1	Receive (tip)
2	Receive (ring)
3	Frame ground
4	Transmit (ring)
5	Transmit (tip)
6	Frame Ground
7	Not connected
8	Not connected

Multiport aggregate device power and grounding requirements

The multiport aggregate device contains two ac or dc power supplies. When both power supplies are operational, they share power consumption for the device. If one of the power supplies fails, the remaining power supply provides power for the device.

The dc power source must be within the range of -36 to -72 V dc. Maximum power consumption is 20 Watts. The dc power feeds into the system must be protected with an external circuit breaker or fuse, with appropriate voltage ratings and regulatory approvals.The disconnect device must be external to the cabinet or rack and reside in the same room.

You must supply your own power cables. Power cables must be properly grounded.

WARNING
Risk of injury by electricity
Failure to properly ground a multiport aggregate device can expose personnel to electrical shock hazards and cause damage to equipment.

WARNUNG
Verletzungsgefahr durch Stromschlag
Wird ein Multiport-Aggregat nicht korrekt geerdet, besteht Verletzungsgefahr für das Bedienpersonal und das Risiko der Beschädigung des Geräts durch Stromschlag.

Multiport aggregate device LEDs

The SYNC LOSS LED for link A indicates a loss of frame (LOF) or loss of signal (LOS) condition on the link between the device and the FP. The SIG LED on the rear of the device is lit when the device is receiving a signal from the FP. You can use the SIG LED for link A in conjunction with the SYNC LOSS LED to distinguish between LOS and LOF. The AIS LED for link A indicates that alarm indication signal is being received from the device.

A pair of LEDs for each E1 port indicate loss of signal (LOS) and alarm indication signal (AIS) conditions.

Multiport aggregate device alarms

If a power supply for the multiport aggregate device fails, it reports the condition and the Nortel Networks Multiservice Switch system raises an alarm. E1 alarms from customer equipment are reported to the device through the E1 signal. E1 alarm conditions include AIS, LOF and remote alarm indication (RAI) conditions.

In the event of an E1 LOS condition, the device sets LOF, RAI, and AIS alarm conditions on the affected ports. There is no distinction between LOS and LOF.

If the link between the FP and the multiport aggregate device fails, the system raises alarms on the 16 E1 ports affected.

Multiport aggregate device compliance

The multiport aggregate device complies with the following standards:

- ITU-T G.703
- ITU-T G.753
- ITU-T G.823

- ITU-T G.824
- EN 55022, 1994
- EN 50082-1, 1992
- EN 60950/A4, 1996

32-port E1 TDM cable assembly

The maximum cable length for lines between the FP and the multiport aggregate device is 750 m (2400 ft). The distance between the FP and the termination panel is part of the total length.

The insertion loss of a cable must not exceed 6 dB measured at 1024 kHz. The table “32-port E1 TDM cable assembly parts” (page 361) specifies the cables required to connect to the faceplate of the FP.

Table 121
32-port E1 TDM cable assembly parts

Qty	Item	Description
2	NT-734 or comparable cable with double shielded construction	75-ohm coaxial cable
4	Specialty Connector Company 28P387-1 or comparable BNC connector	75-ohm straight BNC plug

For more information, see “Cables” (page 89).

32-port E1 MSA 1-slot function processors

These sections are for information about the 32-port E1 for multi-service access (MSA) function processors (FP) that occupy one slot of a shelf assembly. The product engineering codes (PECs) of available E1 MSA32 1-slot FPs are:

- NTNQ93AA for the 32-port E1 MSA 1-slot with the older framer chip for any PCR software
- NTNQ93BA for the 32-port E1 MSA 1-slot with the framer chip for PCR 6.1 and later

The software card type for an NTNQ93 is 32pE1Msa, which is the same for its 2-slot equivalent version (NTNQ73). The software configuration information for these FPs is in NN10600-551 *Nortel Networks Multiservice Switch 7400/15000/20000 FP Configuration Reference*.

The 1-slot FPs are the non-optical versions of the MSA32 FPs, and do not have a monitor port on the faceplate.

The typical power consumption of an NTNQ93 is 43 watts while the maximum is 62.5 watts.

The following apply only to the 1-slot MSA32 FPs unless otherwise specified.

- “Faceplate of a 32-port E1 MSA 1-slot FP with PEC NTNQ93” (page 364)
- “32-port E1 MSA 1-slot and 2-slot FP replacements” (page 364)
- “32-port E1 MSA 1-slot and 2-slot FP sparing combinations” (page 365)
- “32-port E1 MSA termination panels for 1-slot FPs” (page 366)
- “32-port E1 MSA prefabricated cable assemblies for FPs and sparing panels” (page 367)
- “32-port E1 MSA custom-made cable assemblies for FPs and sparing panels” (page 375)
- “32-port E1 MSA 1-slot FP pinouts” (page 376)

- "32-port E1 MSA termination panel pinouts for CPE connections" (page 381)

32-port E1 MSA 1-slot faceplate

A 32-port E1 MSA 1-slot FP occupies one slots in a shelf assembly. (The software checks whether a 1-slot or a 2-slot FP is present so that sparing can be accommodated between the two sizes of FPs.) See the figure "Faceplate of a 32-port E1 MSA 1-slot FP with PEC NTNQ93" (page 364). Although the 1-slot and 2-slot MSA32 FPs have the same functionality, the 1-slot FP has two 68-pin SCSI 2x34 female D-sub connectors instead of the 44-pin high-density female D-sub connectors of the 2-slot faceplate. The pinouts are identified in "32-port E1 MSA 1-slot FP pinouts" (page 376).

Figure 115
Faceplate of a 32-port E1 MSA 1-slot FP with PEC NTNQ93

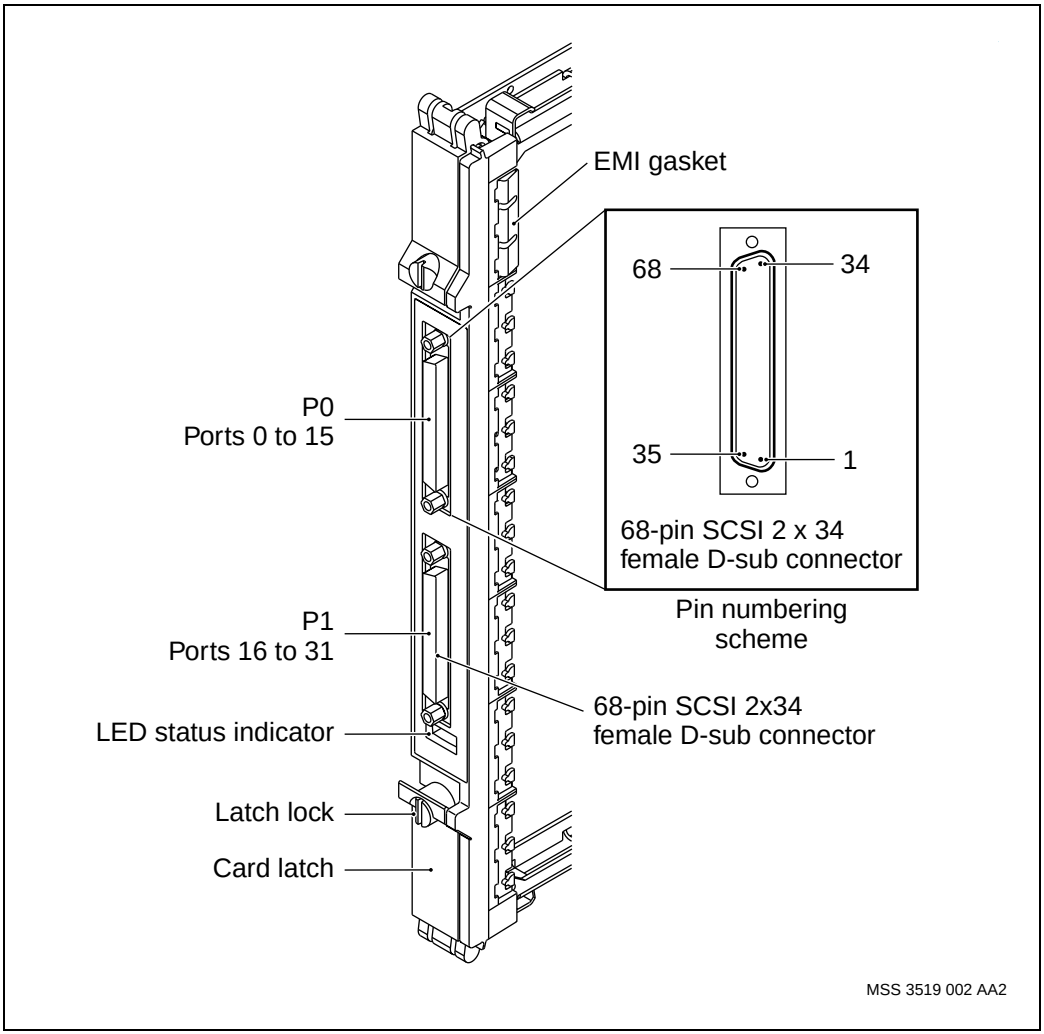

32-port E1 MSA 1-slot and 2-slot FP replacements

A 32-port E1 MSA 1-slot FP can replace an equivalent 2-slot FP under specific circumstances, and vice versa. The PECs and circumstances are identified in the table “Compatible replacements for equivalent E1 MSA 1-slot and 2-slot FPs” (page 365).

Table 122
Compatible replacements for equivalent E1 MSA 1-slot and 2-slot FPs

PECs of FPs to be replaced	PECs of replacement FPs	Circumstance to enable replacing the FP
NTNQ69 (2-slot)	NTNQ69	normal
	NTNQ93AA	normal, and an FP slot becomes available
	NTNQ93BA	provided the node is running PCR 6.1 or later software, and an FP slot becomes available
NTNQ93Ax (1-slot)	NTNQ93Ax	normal
	NTNQ93Bx	provided the node is running PCR 6.1 or later software
	NTNQ69	provided the adjacent slot to the right of the NTNQ93 is available and, if part of a sparing configuration, the adjacent slot has an even number
NTNQ93Bx (1-slot)	NTNQ93Bx	normal
Note: The value of x is any letter in that PEC vintage.		

32-port E1 MSA 1-slot and 2-slot FP sparing combinations

The possible combinations of all 32-port E1 1-slot and 2-slot FPs in sparing configurations are shown in the table “Sparing combinations of E1 MSA FPs and sparing panels” (page 366). The combination shows E1 FPs that are 1-slot or 2-slot with or without the optical ports in the same sparing configuration.

Table 123
Sparing combinations of E1 MSA FPs and sparing panels

	Spare FP	Main FPs	Sparing panels
E1	NTNQ69 (2-slot)	one or any combination up to six of the following: NTNQ69 without optical ports (2-slot) NTNQ71 multimode with optical ports (2-slot) NTNQ73 single-mode with optical ports (2-slot) NTNQ93 without optical ports (1-slot)	NTJS95, NTY195, NTY196 or NTY197
E1	NTNQ71 (2-slot)	one or any combination up to six of the following: NTNQ69 without optical ports (2-slot) NTNQ71 multimode with optical ports (2-slot) NTNQ73 single-mode with optical ports (2-slot) NTNQ93 without optical ports (1-slot)	NTJS95, NTY195, NTY196 or NTY197
E1	NTNQ73 (2-slot)	one or any combination up to six of the following: NTNQ69 without optical ports (2-slot) NTNQ71 multimode with optical ports (2-slot) NTNQ73 single-mode with optical ports (2-slot) NTNQ93 without optical ports (1-slot)	NTJS95, NTY195, NTY196 or NTY197
E1	NTNQ93 (1-slot)	one or any combination up to six of the following: NTNQ69 without optical ports (2-slot) NTNQ71 multimode with optical ports (2-slot) NTNQ73 single-mode with optical ports (2-slot) NTNQ93 without optical ports (1-slot)	NTJS95, NTY195, NTY196 or NTY197

32-port E1 MSA termination panels for 1-slot FPs

The 32-port E1 MSA 1-slot (or 2-slot) FPs use the termination panels that are identified in “MSA32 DS1 or E1 termination panels” (page 73). These panels fan out customer equipment connections so that each E1 port has its own termination point and access.

The MSA32 E1 or E1 termination panels also support either one-for-one sparing or up to one-for-six sparing for the electrical ports on the MSA32 FPs. Depending on the type of panel, one panel is needed for each FP and up to six panels can be interconnected to use one spare FP. The setup involves up to six Main FPs and one Spare FP.

32-port E1 MSA prefabricated cable assemblies for FPs and sparing panels

The prefabricated cable assemblies for one or more 32-port E1 MSA 1-slot or 2-slot FPs and their sparing panels provide:

- interfacing between the sparing panel and its FPs, both the mains and the spare
- inter-panel connections in a one-for-n (1:n) sparing configuration that is not one-for-one (1:1) for MSA32
- interfacing between the sparing panel and intra-office equipment such as CSUs or DSXs

The FP interface and inter-panel cables are manufactured by Nortel Networks in fixed lengths with the appropriate connectors.

Inter-panel connections for one-for-n sparing configurations require flexi-cables for linking the panels together. The product engineering codes (PECs) for the flexi-cables are in the table “PECs of the MSA32 E1 flexi-cables between sparing panels” (page 367) and the cable assemblies are shown in the figures:

- “Inter-panel flexi-cable NTJS99 for MSA32 sparing panels with RJ-45 connectors” (page 368)
- “Inter-panel flexi-cable NTY199AB for MSA32 sparing panels with BNC or DB15 connectors” (page 369)

Table 124
PECs of the MSA32 E1 flexi-cables between sparing panels

PEC	Type of sparing panel
NTJS99	RJ-45
NTY199AA	BNC, DB15 1-port, DB15 2-port
NTY199AB	BNC, DB15 1-port, DB15 2-port with shorter flexi-cables and optionally used with a cable cover NTPS07

Figure 116
Inter-panel flexi-cable NTJS99 for MSA32 sparing panels with RJ-45 connectors

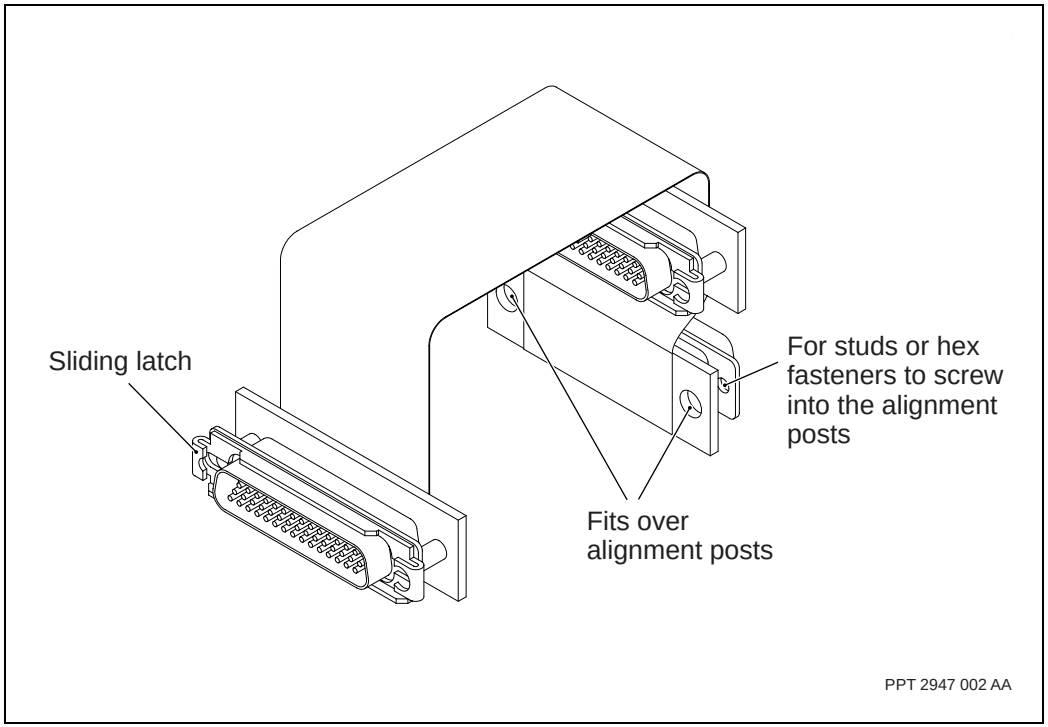

Figure 117
Inter-panel flexi-cable NTY199AB for MSA32 sparing panels with BNC or DB15 connectors

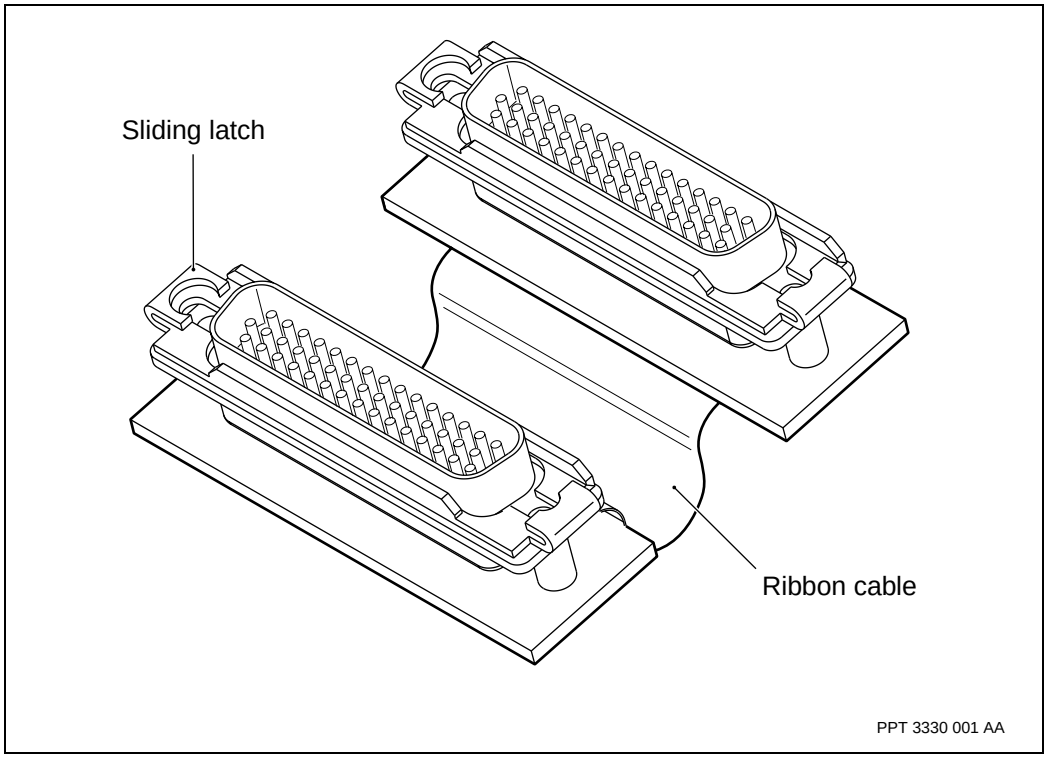

The E1 MSA32 sparing panels with BNC or DB15 connectors can have an optional cable cover installed over the inter-panel flexi-cables of a one-for-n configuration. The cover is identified by PEC NTPS07. The flexi-cable assembly must be the shorter version identified by NTY199AB or later.

The available MSA32 FP interface cables are listed in the table “PECs of the MSA32 E1 interface fanout cables from FP to sparing panel” (page 370). In addition to providing connectivity for the E1 ports, each MSA32 FP interface cable also integrates sparing panel control lines. Each cable also provides ferrite shielding in the connector shrouds, and is automatically grounded when connected securely to Multiservice Switch equipment.

Table 125
PECs of the MSA32 E1 interface fanout cables from FP to sparing panel

Cable PECs	Connector at FP end	Connector at panel end	Cable length	E1 FPs	Panel PECs
NTPS03	angled 44-pin high-density male D-sub	straight 44-pin high-density female D-sub	3 m (9.8 ft)	NTNQ73 NTNQ71 NTNQ73	NTJS95 NTY195 NTY196 NTY197
NTPS04	angled 44-pin high-density male D-sub	straight 44-pin high-density female D-sub	15 m (49.2 ft)	NTNQ73 NTNQ71 NTNQ73	NTJS95 NTY195 NTY196 NTY197
NTPS32	angled 68-pin SCSI 2x34 male D-sub	split into two straight 44-pin high-density female D-sub	3 m (9.8 ft)	NTNQ93 NTNQ93	NTJS95 NTY195 NTY196 NTY197
NTPS33	angled 68-pin SCSI 2x34 male D-sub	split into two straight 44-pin high-density female D-sub	15 m (49.2 ft)	NTNQ93 NTNQ93	NTJS95 NTY195 NTY196 NTY197
NTPS36	angled 68-pin SCSI 2x34 male D-sub	split into two straight 44-pin high-density female D-sub with sliding latch (or locking clip)	3 m (9.8 ft)	NTNQ93 NTNQ93	NTJS95 converted to sliding latch D-subs
NTPS37	angled 68-pin SCSI 2x34 male D-sub	split into two straight 44-pin high-density female D-sub with sliding latch (or locking clip)	15 m (49.2 ft)	NTNQ93 NTNQ93	NTJS95 converted to sliding latch D-subs
NTPS39	angled 68-pin SCSI 2x34 female D-sub	split into two straight 44-pin high-density female D-subs; mainly intended to connect to previously installed NTPS03 or NTPS04 cables	1 m (3.3 ft)	NTNQ93 NTNQ93	NTJS95 NTY195 NTY196 NTY197

The fanout cables for the NTNQ93 and NTNQ93 FPs are shown in the following figures:

- “Fanout cable NTPS32 or NTPS33 for a 32-port E1 MSA 1-slot FP” (page 372)
- “Fanout cable NTPS36 or NTPS37 with sliding latch D-subs for a 32-port E1 MSA 1-slot FP” (page 373)
- “Fanout cable NTPS03 or NTPS04 to connect to an adapter cable NTPS39 of an E1 1-slot FP” (page 375)

The prefabricated fanout cable that connects to a cable adapter NTPS39 for use with the 1-slot FPs is shown in the figure “Fanout cable NTPS03 or NTPS04 to connect to an adapter cable NTPS39 of an E1 1-slot FP” (page 375).

For general information on FP cables, see “Cables” (page 89).

Figure 118
Fanout cable NTPS32 or NTPS33 for a 32-port E1 MSA 1-slot FP

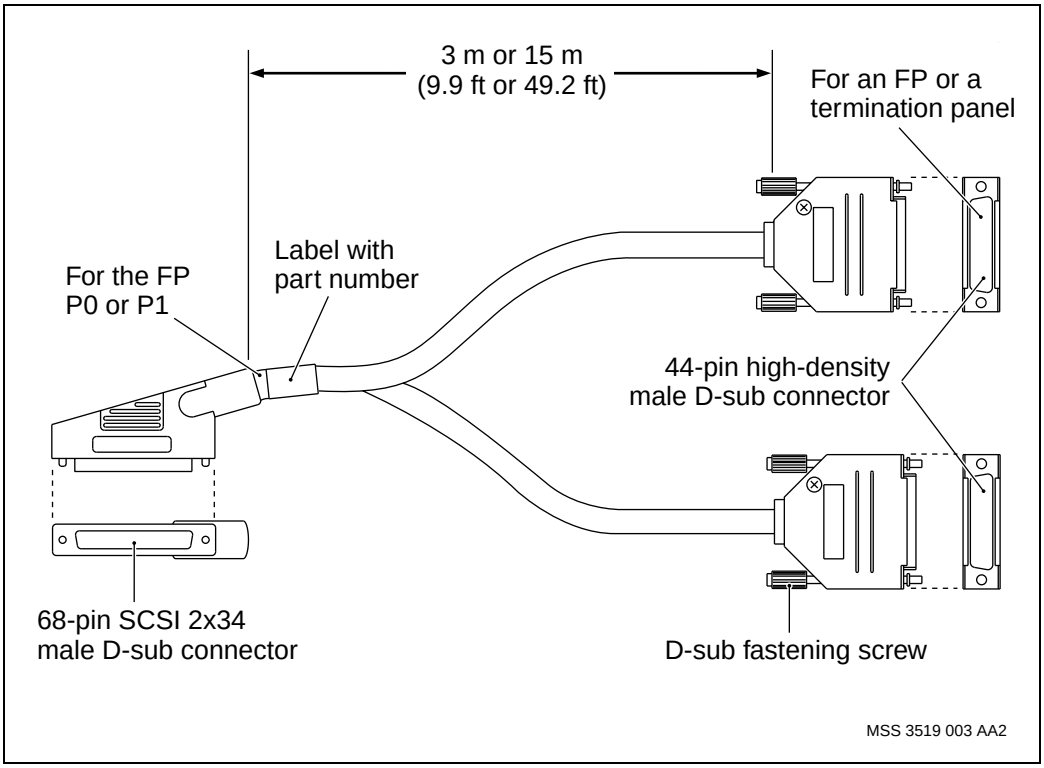

Figure 119
Fanout cable NTPS36 or NTPS37 with sliding latch D-subs for a 32-port E1 MSA 1-slot FP

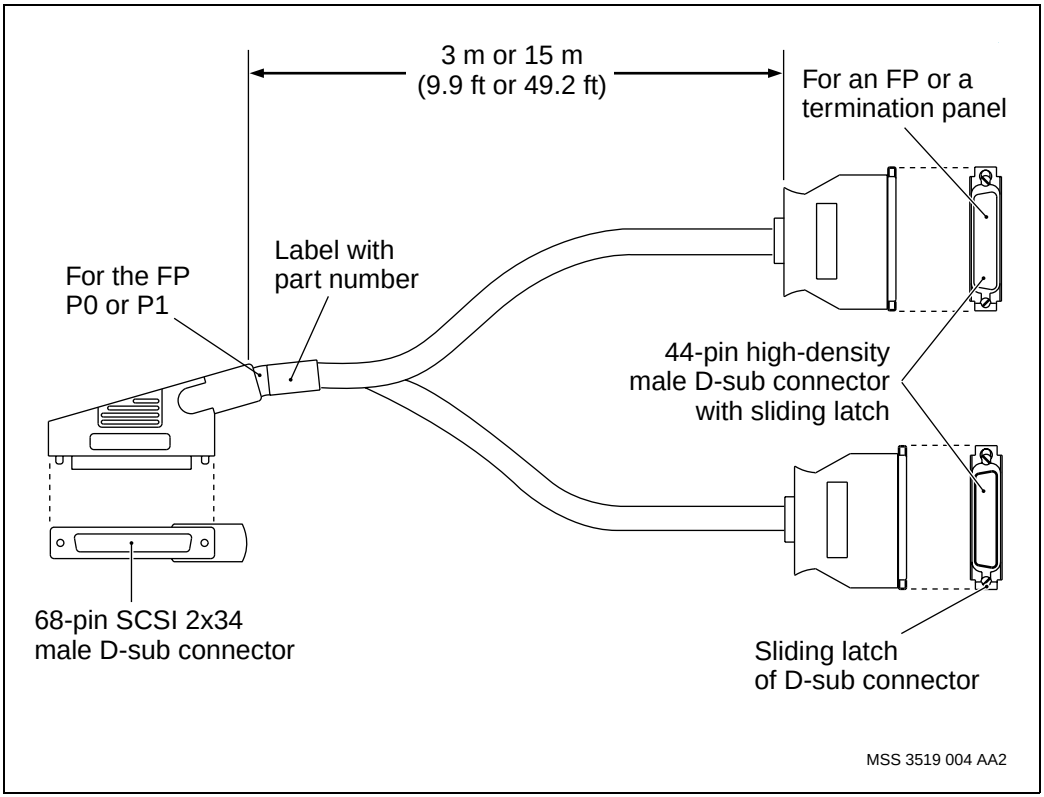

Figure 120
Fanout cable adapter NTPS39 for connecting a 1-slot FP to 2-slot cables NTPS03 or NTPS04

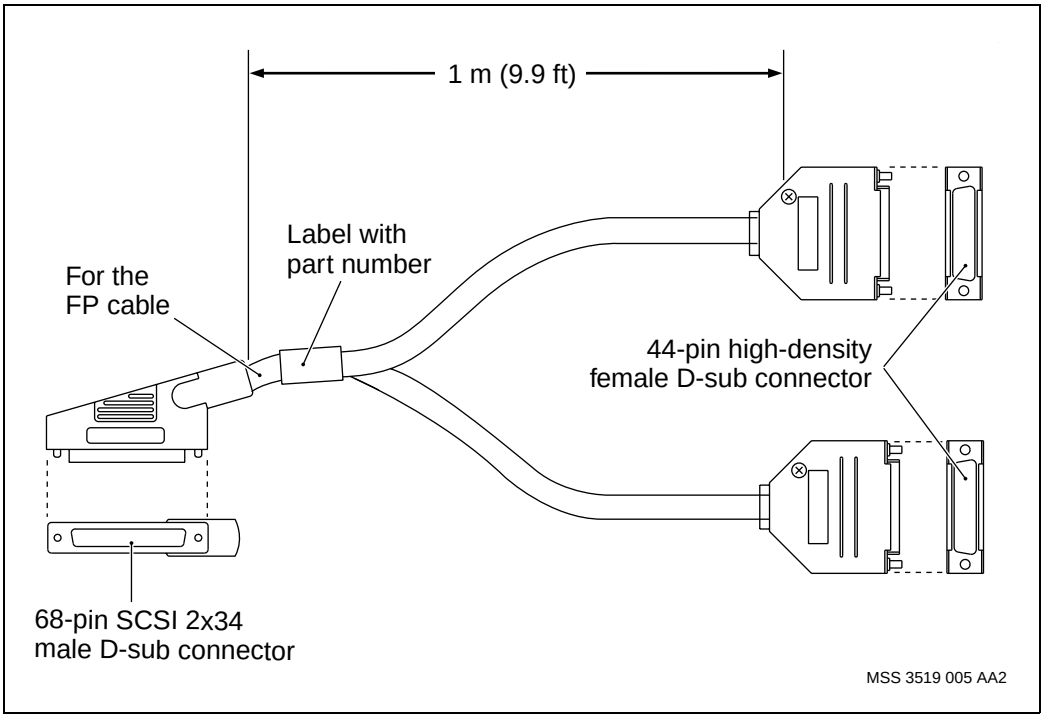

Figure 121
Fanout cable NTPS03 or NTPS04 to connect to an adapter cable NTPS39 of an E1 1-slot FP

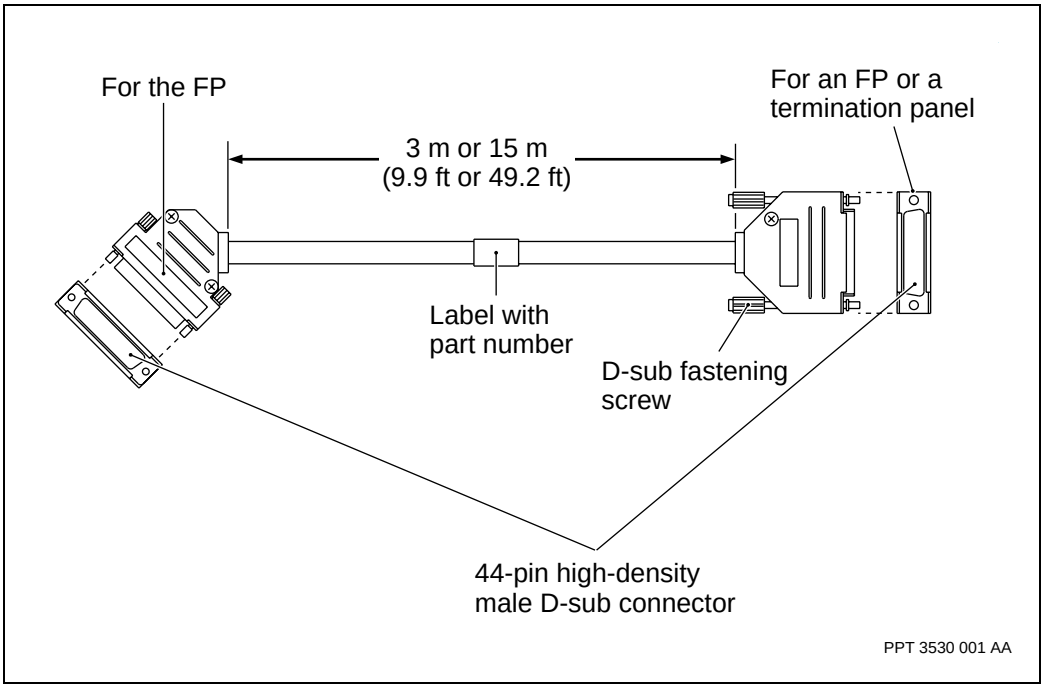

32-port E1 MSA custom-made cable assemblies for FPs and sparing panels

The specifications to custom make your own E1 MSA cable assemblies to connect an FP to a sparing panel are as follows:

- The maximum cable length for E1 lines to customer premises equipment (CPE) is 230 m (754.6 ft). The distance between the FP and the termination panel is part of the total length.
- Use AWG No. 28 (0.32 mm), 100 ohm shielded, twisted pair cables.
- The insertion loss of each pair must not exceed 6 dB measured at 1024 kHz. Insertion loss is proportional to cable length and varies among types of cables.
- The types of cable connectors are shown in these figures:

— “Fanout cable NTPS32 or NTPS33 for a 32-port E1 MSA 1-slot FP” (page 372)

— “Fanout cable NTPS36 or NTPS37 with sliding latch D-subs for a 32-port E1 MSA 1-slot FP” (page 373)

— “Fanout cable NTPS03 or NTPS04 to connect to an adapter cable NTPS39 of an E1 1-slot FP” (page 375)

- For a 1-slot FP, use the connector pinouts in “32-port E1 MSA 1-slot FP pinouts” (page 376).
- For a 2-slot FP, use the connector pinouts in “32-port E1 MSA 2-slot FP pinouts” (page 389).

For general information on FP cables, see “Cables” (page 89).

32-port E1 MSA 1-slot FP pinouts

When connecting directly from a 32-port E1 MSA 1-slot FP to customer premises equipment (CPE), in effect bypassing the MSA32 termination panels or not using the prefabricated Nortel Networks cables, the CPE cabling must be adapted to the FP’s 68-pin D-sub faceplate pinouts. Refer to the figure “Faceplate of a 32-port E1 MSA 1-slot FP with PEC NTNQ93” (page 364).

The 1-slot NTNQ93 FP has higher density D-sub connectors on its faceplate than the 2-slot NTNQ73 FP, but both FPs connect to the same types of termination or sparing panels. To accommodate the different numbers of pins in the connectors, prefabricated fanout cables and a fanout cable adapter are available from Nortel Networks for the 1-slot FPs. Each fanout cable can be used at either the P0 or P1 sets of ports at the FP. The cables are identified and shown in “32-port E1 MSA prefabricated cable assemblies for FPs and sparing panels” (page 367).

The relationship of FP and split cable connectors is identified in the table “Mapping of MSA 1-slot FP port numbers to fanout cable connectors” (page 377).

Table 126
Mapping of MSA 1-slot FP port numbers to fanout cable connectors

FP 68-pin connector labels	Fanout cable 44-pin connector labeled P0/P2	Fanout cable 44-pin connector labeled P1/P3
P0 has ports 0 to 15	when connected to MSA termination or sparing panel P0, has ports 0 to 7	when connected to MSA termination or sparing panel P1, has ports 8 to 15
P1 has ports 16 to 31	when connected to MSA termination or sparing panel P2, has ports 16 to 23	when connected to MSA termination or sparing panel P3, has ports 24 to 31 and operational signals

The following tables identify the 1-slot FP 68-pin and termination panel 44-pin connector pinouts:

- "E1 MSA 1-slot FP connector pinouts for P0 ports 0 to 7 and P1 ports 16 to 23" (page 377)
- "32-port E1 MSA 1-slot FP connector pinouts for P0 ports 8 to 15 and P1 ports 24 to 31" (page 379)

Table 127
E1 MSA 1-slot FP connector pinouts for P0 ports 0 to 7 and P1 ports 16 to 23

FP pin numbers of a 68-pin connector	Signal name at P0	Signal name at P1
57	port 0 Tx +	port 16 Tx +
33	port 0 Tx -	port 16 Tx -
66	port 0 Rx +	port 16 Rx +
32	port 0 Rx -	port 16 Rx -
65	port 1 Tx +	port 17 Tx +
31	port 1 Tx -	port 17 Tx -
64	port 1 Rx +	port 17 Rx +
(Sheet 1 of 3)		

Table 127 (continued)
E1 MSA 1-slot FP connector pinouts for P0 ports 0 to 7 and P1 ports 16 to 23

FP pin numbers of a 68-pin connector	Signal name at P0	Signal name at P1
30	port 1 Rx -	port 17 Rx -
63	port 2 Tx +	port 18 Tx +
29	port 2 Tx -	port 18 Tx -
62	port 2 Rx +	port 18 Rx +
28	port 2 Rx -	port 18 Rx -
61	port 3 Tx +	port 19 Tx +
27	port 3 Tx -	port 19 Tx -
60	port 3 Rx +	port 19 Rx +
26	port 3 Rx -	port 19 Rx -
59	port 4 Tx +	port 20 Tx +
25	port 4 Tx -	port 20 Tx -
58	port 4 Rx +	port 20 Rx +
24	port 4 Rx -	port 20 Rx -
57	port 5 Tx +	port 21 Tx +
23	port 5 Tx -	port 21 Tx -
56	port 5 Rx +	port 21 Rx +
22	port 5 Rx -	port 21 Rx -
55	port 6 Tx +	port 22 Tx +
21	port 6 Tx -	port 22 Tx -
54	port 6 Rx +	port 22 Rx +
20	port 6 Rx -	port 22 Rx -
53	port 7 Tx +	port 23 Tx +
19	port 7 Tx -	port 23 Tx -
(Sheet 2 of 3)		

Table 127 (continued)
E1 MSA 1-slot FP connector pinouts for P0 ports 0 to 7 and P1 ports 16 to 23

FP pin numbers of a 68-pin connector	Signal name at P0	Signal name at P1
52	port 7 Rx +	port 23 Rx +
18	port 7 Rx -	port 23 Rx -
(Sheet 3 of 3)		

Table 128
32-port E1 MSA 1-slot FP connector pinouts for P0 ports 8 to 15 and P1 ports 24 to 31

FP pin numbers of a 68-pin connector	Signal name at P0	Signal name at P1
51	port 8 Tx +	port 24 Tx +
17	port 8 Tx -	port 24 Tx -
50	port 8 Rx +	port 24 Rx +
16	port 8 Rx -	port 24 Rx -
49	port 9 Tx +	port 25 Tx +
15	port 9 Tx -	port 25 Tx -
48	port 9 Rx +	port 25 Rx +
14	port 9 Rx -	port 25 Rx -
47	port 10 Tx +	port 26 Tx +
13	port 10 Tx -	port 26 Tx -
46	port 10 Rx +	port 26 Rx +
12	port 10 Rx -	port 26 Rx -
45	port 11 Tx +	port 27 Tx +
11	port 11 Tx -	port 27 Tx -
44	port 11 Rx +	port 27 Rx +
(Sheet 1 of 2)		

Table 128 (continued)
32-port E1 MSA 1-slot FP connector pinouts for P0 ports 8 to 15 and P1 ports 24 to 31

FP pin numbers of a 68-pin connector	Signal name at P0	Signal name at P1
10	port 11 Rx -	port 27 Rx -
43	port 12 Tx +	port 28 Tx +
9	port 12 Tx -	port 28 Tx -
42	port 12 Rx +	port 28 Rx +
8	port 12 Rx -	port 28 Rx -
41	port 13 Tx +	port 29 Tx +
7	port 13 Tx -	port 29 Tx -
40	port 13 Rx +	port 29 Rx +
6	port 13 Rx -	port 29 Rx -
39	port 14 Tx +	port 30 Tx +
5	port 14 Tx -	port 30 Tx -
38	port 14 Rx +	port 30 Rx +
4	port 14 Rx -	port 30 Rx -
37	port 15 Tx +	port 31 Tx +
3	port 15 Tx -	port 31 Tx -
36	port 15 Rx +	port 31 Rx +
2	port 15 Rx -	port 31 Rx -
34	- - - - - - - - -	FP_CLOCK
68	- - - - - - - - -	FP_DATA
1	- - - - - - - - -	12V_PROT
35	- - - - - - - - -	ground
shield	frame ground	frame ground

(Sheet 2 of 2)

32-port E1 MSA termination panel pinouts for CPE connections

The pinouts for connecting customer premises equipment (CPE) to a 32-port E1 MSA termination panel are identified in the figures:

- “32-port E1 MSA termination panel pinouts and signal names: 1-port/DB15” (page 381)
- “32-port E1 MSA termination panel pinouts and signal names: 2-port/DB15” (page 382)
- “32-port E1 MSA termination panel pinouts and signal names: RJ-45” (page 383)

Figure 122
32-port E1 MSA termination panel pinouts and signal names: 1-port/DB15

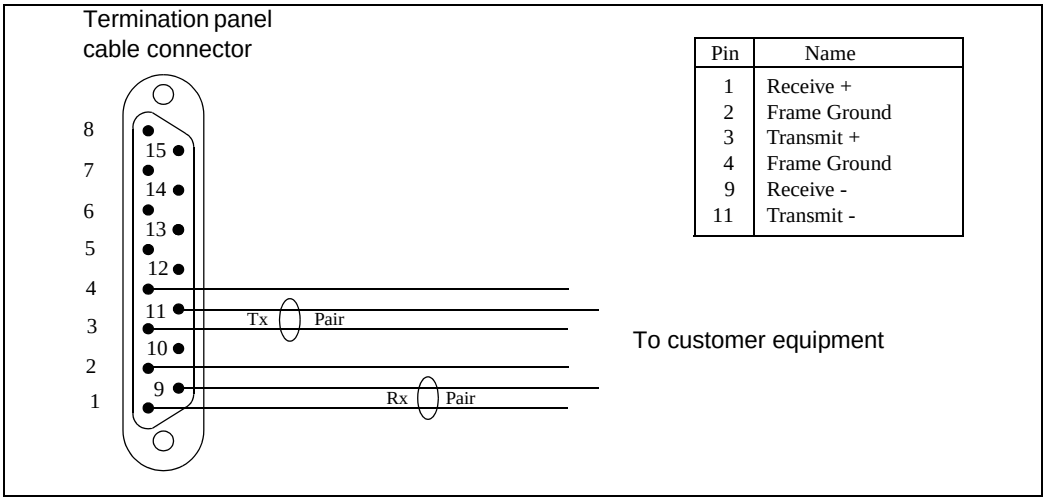

Pin	Name
1	Receive +
2	Frame Ground
3	Transmit +
4	Frame Ground
9	Receive -
11	Transmit -

Pinouts for each of the 32 ports follow the pattern shown in the figure “32-port E1 MSA termination panel pinouts and signal names: 1-port/DB15” (page 381).

Figure 123
32-port E1 MSA termination panel pinouts and signal names: 2-port/DB15

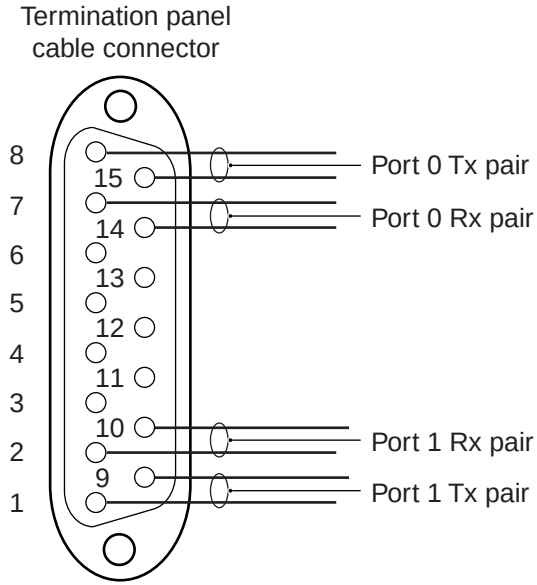

Pin	Name
1	Port 1 transmit +
2	Port 1 receive +
5	Signal ground
7	Port 0, receive +
8	Port 0, transmit +
9	Port 1, transmit -
10	Port 1, receive -
12	Frame ground
14	Port 0, receive -
15	Port 0, transmit -

To customer equipment

PPT 2862 001 AB

Pinouts for each of the 32 ports follow the pattern shown in the figure "32-port E1 MSA termination panel pinouts and signal names: 2-port/DB15" (page 382). All odd-numbered ports (1,3,5,...,31) have identical pinouts, as do all even-numbered ports (0,2,4,...,30).

Figure 124
32-port E1 MSA termination panel pinouts and signal names: RJ-45

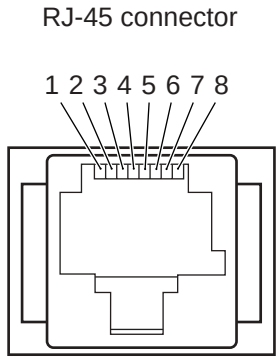

Pin	Signal
1	Rx-
2	Rx+
3	Not used
4	Tx-
5	Tx+
6	Not used
7	Not used
8	Not used

PPT 2898 001 AA

Pinouts for each of the 32 ports follow the pattern shown in the figure "32-port E1 MSA termination panel pinouts and signal names: RJ-45" (page 383).

32-port E1 MSA 2-slot function processors

These sections are for information about the 32-port E1 for multi-service access (MSA) function processors (FPs) that occupy two slots of a shelf assembly. The product engineering codes (PECs) of available E1 MSA32 2-slot FPs are:

- NTNQ69 for the 32-port E1 MSA 2-slot
- NTNQ71 for the 32-port E1 MSA 2-slot with 2-port (protected) OC-3/STM-1 multimode
- NTNQ73 for the 32-port E1 MSA 2-slot with 2-port (protected) OC-3/STM-1 single-mode

The software card types for the 2-slot FPs are as follows.

- NTNQ69 has 32pE1Msa (the same as NTNQ93)
- NTNQ71 has 32pE1MsaMtp
- NTNQ73 has 32pE1MsaStp

The software configuration information for these FPs is in NN10600-551 *Nortel Networks Multiservice Switch 7400/15000/20000 FP Configuration Reference*.

The following apply to the MSA32 FPs. Unless otherwise specified, the information applies to an MSA32 2-slot FP with or without the optional optical ports.

- “32-port E1 MSA 2-slot faceplates” (page 385)
- “32-port E1 MSA 2-slot FP replacements” (page 388)
- “32-port E1 MSA 2-slot FP sparing combinations” (page 388)
- “32-port E1 MSA termination panels” (page 388)
- “32-port E1 MSA 2-slot FP pinouts” (page 389)
- “32-port E1 MSA cable assemblies for a 2-slot FP and sparing panel” (page 398)
- “STM-1 cable assembly for optical ports on a 32-port E1 MSA 2-slot FP” (page 400)

- “STM-1 line automatic protection switching on a 32-port E1 MSA 2-slot FP” (page 400)
- “STM-1 interface characteristics on a 32-port E1 MSA 2-slot FP” (page 401)
- “Connecting to STM-1 ports on a 32-port E1 MSA 2-slot FP” (page 402)

32-port E1 MSA 2-slot faceplates

A 32-port E1 MSA FP (FP) occupies two adjacent slots in a shelf. (The software uses only the first slot number and ignores the second one.) See the figures:

- “Faceplate of a 32-port E1 MSA 2-slot NTNQ69” (page 386)
- “Faceplate of a 32-port E1 MSA 2-slot NTNQ71 or NTNQ73 with STM-1 ports” (page 387)

The transmit (TX) connection is located at the top half of the STM-1 port, while the receive (RX) connection is at the bottom.

The maintenance port on the faceplate of the E1 MSA 2-slot FP is unsupported.

Figure 125
Faceplate of a 32-port E1 MSA 2-slot NTNQ69

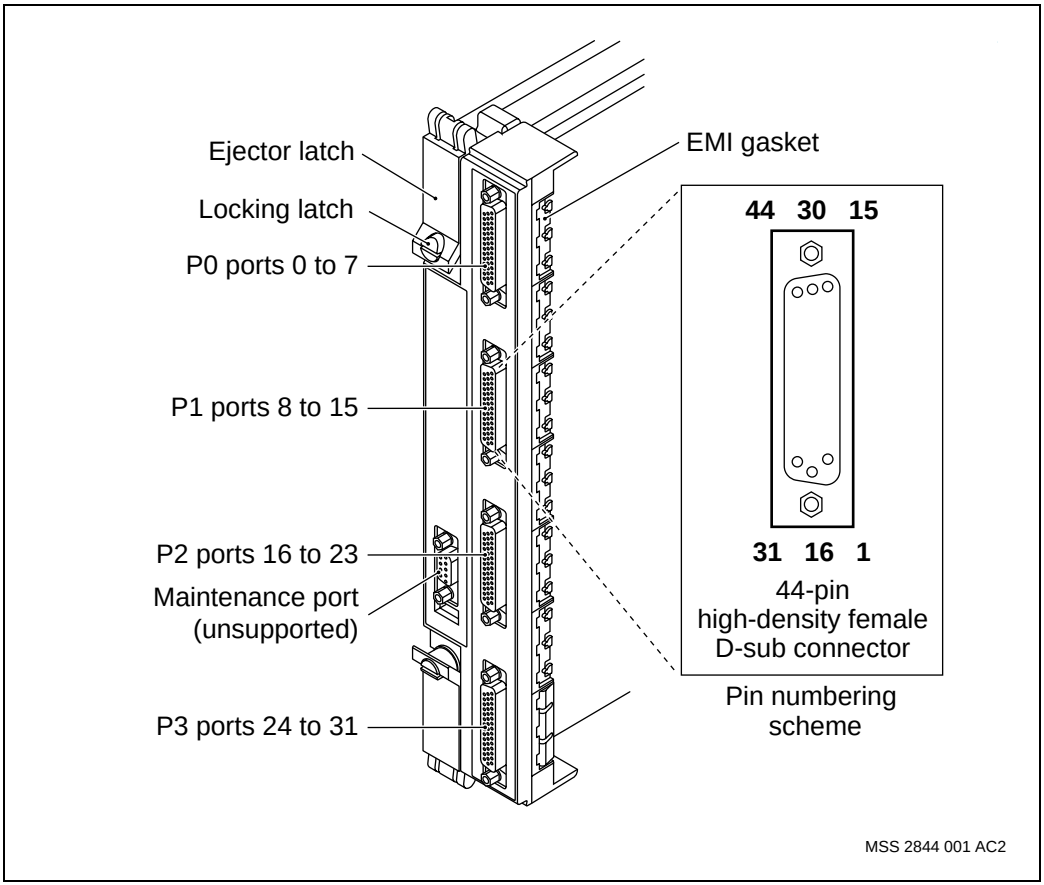

Figure 126
Faceplate of a 32-port E1 MSA 2-slot NTNQ71 or NTNQ73 with STM-1 ports

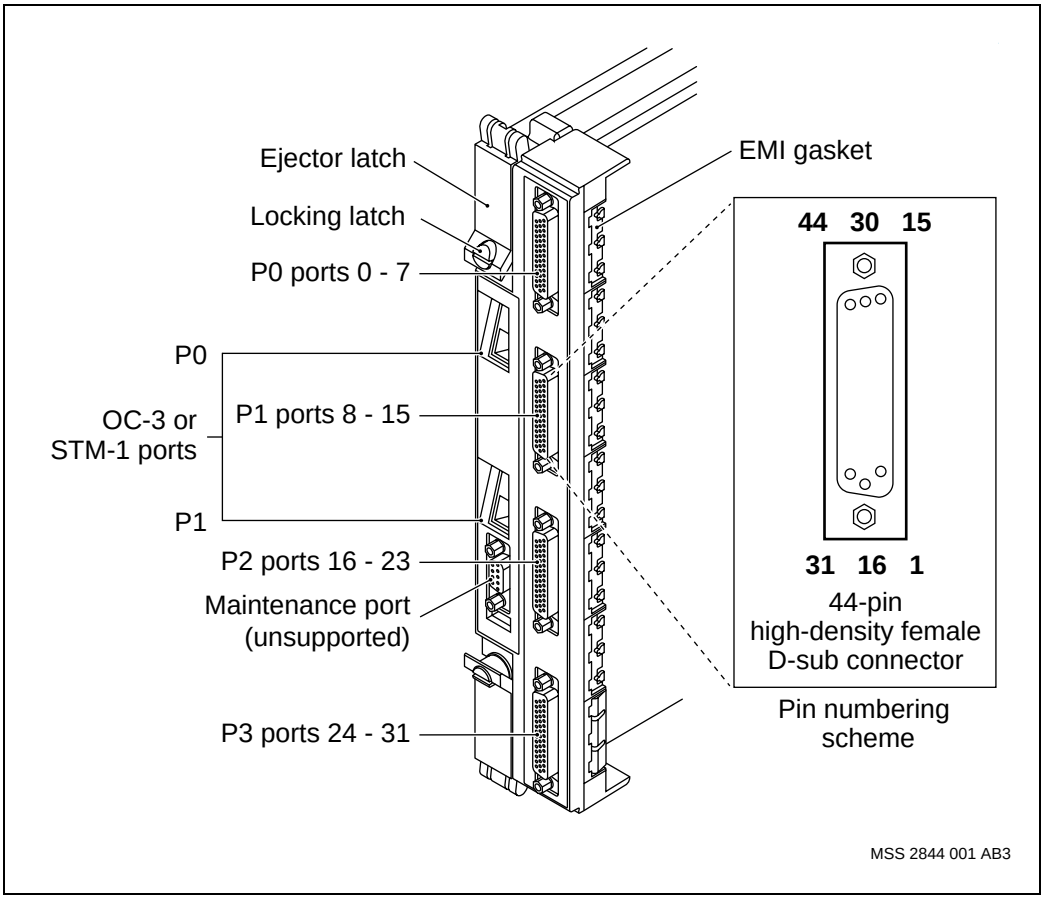

CAUTION
Risk of service loss
Two power supplies must be installed before inserting an MSA32 FP. There is a risk of a shelf reset when installing an MSA32 FP in a shelf with only a single power supply unit. This risk does not apply when the MSA32 is already installed and one of two power supplies fail.

CAUTION

Risk of service loss by a shelf reset

Two power supplies must be installed before inserting a 32-port MSA 2-slot FP with the PEC NTNQ69AA, NTNQ71AA, NTNQ73AA, NTNQ74AA, NTNQ76AA, or NTNQ78AA. There is a risk of a shelf reset when installing one of these FPs in a shelf with only one operating power supply unit. This risk does not apply when the FPs are already installed and one of two power supplies fails.

32-port E1 MSA 2-slot FP replacements

A 32-port E1 MSA 2-slot FP can be replaced or upgraded by an equivalent 1-slot FP under specific circumstances. The PECs and circumstances are identified in the table “Compatible replacements for equivalent E1 MSA 1-slot and 2-slot FPs” (page 365).

32-port E1 MSA 2-slot FP sparing combinations

The possible combinations of all 32-port E1 1-slot and 2-slot FPs in sparing configurations are shown in the table “Sparing combinations of E1 MSA FPs and sparing panels” (page 366).

32-port E1 MSA termination panels

The 32-port E1 MSA 2-slot (or 1-slot) FPs use the termination panels that are identified in “MSA32 E1 unbalanced BNC termination panel” (page 72) and “MSA32 DS1 or E1 termination panels” (page 73). These termination panels fan out customer equipment connections so that each E1 port has its own termination point and access.

The termination panels also support either one-for-one or up to one-for-six sparing for the electrical ports on the MSA32 FPs. Depending on the type of panel, one panel is needed for each FP and up to six panels can be interconnected to use one spare FP. The setup involves up to six main FPs and one spare FP.

32-port E1 MSA 2-slot FP pinouts

When connecting directly from the 32-port E1 MSA 2-slot FP to customer premises equipment (CPE), in effect bypassing the MSA32 termination panels or not using the prefabricated Nortel Networks cables, the CPE cabling must be adapted to the FP's cabling pinouts.

Connector P3 on the FP faceplate has a different pinout than the connectors P0, P1, and P2. When connecting CPE directly to the P0, P1, P2, or P3 connectors on the FP, do not connect anything to pins 1, 2, or 16.

See these tables for information on specific FP connector pinouts:

- "32-port E1 MSA 2-slot FP connector P0 pinout and signal names" (page 389)
- "32-port E1 MSA 2-slot FP connector P1 pinout and signal names" (page 391)
- "32-port E1 MSA 2-slot FP connector P2 pinout and signal names" (page 393)
- "32-port E1 MSA 2-slot FP connector P3 pinout and signal names" (page 395)

Table 129
32-port E1 MSA 2-slot FP connector P0 pinout and signal names

Pin number	Signal name
9	Port 0, Transmit -
39	Port 0, Transmit +
10	Port 0, Receive -
25	Port 0, Receive +
27	Port 1, Transmit -
41	Port 1, Transmit +
11	Port 1, Receive -
26	Port 1, Receive +
28	Port 2, Transmit -
(Sheet 1 of 3)	

Table 129 (continued)
32-port E1 MSA 2-slot FP connector P0 pinout and signal names

Pin number	Signal name
42	Port 2, Transmit +
13	Port 2, Receive +
43	Port 2, Receive -
15	Port 3, Transmit -
30	Port 3, Transmit +
14	Port 3, Receive +
44	Port 3, Receive -
18	Port 4, Transmit -
32	Port 4, Transmit +
3	Port 4, Receive -
33	Port 4, Receive +
5	Port 5, Transmit -
20	Port 5, Transmit +
4	Port 5, Receive -
34	Port 5, Receive +
6	Port 6, Transmit -
21	Port 6, Transmit +
22	Port 6, Receive -
36	Port 6, Receive +
8	Port 7, Transmit -
38	Port 7, Transmit +
23	Port 7, Receive -
37	Port 7, Receive +
1	Signal ground
16	Signal ground
(Sheet 2 of 3)	

Table 129 (continued)
32-port E1 MSA 2-slot FP connector P0 pinout and signal names

Pin number	Signal name
17	Signal ground
24	Signal ground
31	Signal ground
35	Signal ground
2	Signal ground
7	Signal ground
12	Signal ground
19	Signal ground
29	Signal ground
40	Signal ground
shield	Frame ground
Note: When connecting directly from CPE to the FP, do not connect anything to pins 1, 2, or 16.	
(Sheet 3 of 3)	

Table 130
32-port E1 MSA 2-slot FP connector P1 pinout and signal names

Pin number	Signal name
9	Port 8, Transmit -
39	Port 8, Transmit +
10	Port 8, Receive -
25	Port 8, Receive +
27	Port 9, Transmit -
41	Port 9, Transmit +
11	Port 9, Receive -
26	Port 9, Receive +
(Sheet 1 of 3)	

Table 130 (continued)
32-port E1 MSA 2-slot FP connector P1 pinout and signal names

Pin number	Signal name
28	Port 10, Transmit -
42	Port 10, Transmit +
13	Port 10, Receive +
43	Port 10, Receive -
15	Port 11, Transmit -
30	Port 11, Transmit +
14	Port 11, Receive +
44	Port 11, Receive -
18	Port 12, Transmit -
32	Port 12, Transmit +
3	Port 12, Receive -
33	Port 12, Receive +
5	Port 13, Transmit -
20	Port 13, Transmit +
4	Port 13, Receive -
34	Port 13, Receive +
6	Port 14, Transmit -
21	Port 14, Transmit +
22	Port 14, Receive -
36	Port 14, Receive +
8	Port 15, Transmit -
38	Port 15, Transmit +
23	Port 15, Receive -
37	Port 15, Receive +
1	Signal ground
(Sheet 2 of 3)	

Table 130 (continued)
32-port E1 MSA 2-slot FP connector P1 pinout and signal names

Pin number	Signal name
16	Signal ground
17	Signal ground
24	Signal ground
31	Signal ground
35	Signal ground
2	Signal ground
7	Signal ground
12	Signal ground
19	Signal ground
29	Signal ground
40	Signal ground
shield	Frame ground
Note: When connecting directly from CPE to the FP, do not connect anything to pins 1, 2, or 16.	
(Sheet 3 of 3)	

Table 131
32-port E1 MSA 2-slot FP connector P2 pinout and signal names

Pin number	Signal name
9	Port 16, Transmit -
39	Port 16, Transmit +
10	Port 16, Receive -
25	Port 16, Receive +
27	Port 17, Transmit -
41	Port 17, Transmit +
11	Port 17, Receive -
(Sheet 1 of 3)	

Table 131 (continued)
32-port E1 MSA 2-slot FP connector P2 pinout and signal names

Pin number	Signal name
26	Port 17, Receive +
28	Port 18, Transmit -
42	Port 18, Transmit +
13	Port 18, Receive +
43	Port 18, Receive -
15	Port 19, Transmit -
30	Port 19, Transmit +
14	Port 19, Receive +
44	Port 19, Receive -
18	Port 20, Transmit -
32	Port 20, Transmit +
3	Port 20, Receive -
33	Port 20, Receive +
5	Port 21, Transmit -
20	Port 21, Transmit +
4	Port 21, Receive -
34	Port 21, Receive +
6	Port 22, Transmit -
21	Port 22, Transmit +
22	Port 22, Receive -
36	Port 22, Receive +
8	Port 23, Transmit -
38	Port 23, Transmit +
23	Port 23, Receive -
37	Port 23, Receive +
(Sheet 2 of 3)	

Table 131 (continued)
32-port E1 MSA 2-slot FP connector P2 pinout and signal names

Pin number	Signal name
1	Signal ground
16	Signal ground
17	Signal ground
24	Signal ground
31	Signal ground
35	Signal ground
2	Signal ground
7	Signal ground
12	Signal ground
19	Signal ground
29	Signal ground
40	Signal ground
Note: When connecting directly from CPE to the FP, do not connect anything to pins 1, 2, or 16.	
(Sheet 3 of 3)	

Table 132
32-port E1 MSA 2-slot FP connector P3 pinout and signal names

Pin number	Signal name
9	Port 24, Transmit -
39	Port 24, Transmit +
10	Port 24, Receive -
25	Port 24, Receive +
27	Port 25, Transmit -
41	Port 25, Transmit +
11	Port 25, Receive -
(Sheet 1 of 3)	

Table 132 (continued)
32-port E1 MSA 2-slot FP connector P3 pinout and signal names

Pin number	Signal name
26	Port 25, Receive +
28	Port 26, Transmit -
42	Port 26, Transmit +
13	Port 26, Receive +
43	Port 26, Receive -
15	Port 27, Transmit -
30	Port 27, Transmit +
14	Port 27, Receive +
44	Port 27, Receive -
18	Port 28, Transmit -
32	Port 28, Transmit +
3	Port 28, Receive -
33	Port 28, Receive +
5	Port 29, Transmit -
20	Port 29, Transmit +
4	Port 29, Receive -
34	Port 29, Receive +
6	Port 30, Transmit -
21	Port 30, Transmit +
22	Port 30, Receive -
36	Port 30, Receive +
8	Port 31, Transmit -
38	Port 31, Transmit +
23	Port 31, Receive -
37	Port 31, Receive +
(Sheet 2 of 3)	

Table 132 (continued)
32-port E1 MSA 2-slot FP connector P3 pinout and signal names

Pin number	Signal name
1	Sparing control
16	12V feed to sparing panel
17	Signal ground
24	Signal ground
31	Signal ground
35	Signal ground
2	Sparing control
7	Signal ground
12	Signal ground
19	Signal ground
29	Signal ground
40	Signal ground
shield	Frame ground
Note: When connecting directly from CPE to the FP, do not connect anything to pins 1, 2, or 16.	
(Sheet 3 of 3)	

32-port E1 MSA termination panel pinouts for CPE connections

The pinouts for connecting customer premises equipment (CPE) to a 32-port E1 MSA termination panel are the same for E1 MSA 1-slot and 2-slot FPs. See “32-port E1 MSA termination panel pinouts for CPE connections” (page 381).

Table 133
PECs of the 32-port E1 MSA flexi-cables between sparing panels

PEC	Type of sparing panel
NTJS99	RJ-45
NTY199AA	BNC, DB15 1-port, DB15 2-port
NTY199AB	BNC, DB15 1-port, DB15 2-port with shorter flexi-cables and optionally used with a cable cover NTPS07

32-port E1 MSA cable assemblies for a 2-slot FP and sparing panel

The cable assemblies that are used to connect the 32-port E1 MSA 2-slot FP to a E1 (or DS1) MSA32 sparing panel are identified in:

- the section “32-port E1 MSA prefabricated cable assemblies for FPs and sparing panels” (page 367)
- the table “E1 MSA32 cable assembly parts for direct connection to a 2-slot FP” (page 398)
- the table “E1 MSA32 cable assembly parts for a 1-port or 2-port DB15 sparing panel” (page 399)
- the table “E1 MSA32 cable assembly parts for an unbalanced sparing panel and CPE” (page 399)

For an RJ-45 connection, use STP5 shielded cable.

Table 134
E1 MSA32 cable assembly parts for direct connection to a 2-slot FP

Qty	Item	Description
	MTR R0119440	cable, 18 twisted pairs, 28-gauge (0.32 mm) strand
2	NT A0351608	high-density D-sub connector
72	NT A0360941	high-density D-sub connector contact, 22 - 28 AU crimp
(Sheet 1 of 2)		

Table 134 (continued)
E1 MSA32 cable assembly parts for direct connection to a 2-slot FP

Qty	Item	Description
1	NT A0311933	accessory D-sub connector, joining latching
1	NT A0800332	D-sub hood connector, D-25 array
1	NT A0800333	D-sub hood connector, D-25 array
2	NT A0740362	cable clamp (standard) for D-sub metal hood
1	NT P0633705	cable tie, tie marker
(Sheet 2 of 2)		

Table 135
E1 MSA32 cable assembly parts for a 1-port or 2-port DB15 sparing panel

Qty	Item	Description
	Belden 8138	cable, 120 ohm, 8 twisted pairs, 28-gauge strand
2	NT A0380877	AMP 205206-3, connector housing, 15-pin D-sub, male, tin plated, with grounding indents
12	NT A0279330	for a 1-port DB15: AMP 66507-9 pin for above, 24- to 28-gauge wire
20	NT A0279330	for a 2-port DB15: AMP 66507-9 pin for above, 24- to 28-gauge wire
2	NT A0361050	AMP 747099-3 straight hood kit, 15-pin D-sub
4	NT P0180927	0.112-40 x 0.5” pan-head machine screw
4	NT P0387666	0.115” spring washer

Table 136
E1 MSA32 cable assembly parts for an unbalanced sparing panel and CPE

Qty	Item	Description
	NT-734	coax cable, 75 ohm
2	NT A0609865	75-ohm straight BNC connector

STM-1 cable assembly for optical ports on a 32-port E1 MSA 2-slot FP

When a 32-port E1 MSA FP has the optional optical ports, it requires optical cabling. The fiber mode type must be the same as the FP mode type. Use single-mode fiber cable with single-mode FPs and multimode fiber cable with multimode FPs.

Multimode fiber (MMF) cable must conform to ANSI/EIA/TIA-568. The MMF has a core diameter of 62.5 microns and cladding diameter of 125 microns. The modal bandwidth is at least 500 MHz-km and the attenuation is less than 1.0 dB/Km at 1300 nm.

The single-mode fiber (SMF) cable has a core diameter of 9 microns and cladding diameter of 125 microns. The attenuation is less than 0.5 dB/Km at 1300 nm.

Connectors should be industry standard duplex SC connectors.

The sum of cable splice losses and connector losses from the FP to customer equipment must not exceed 10 dB for multimode and 12 dB for single-mode. The losses in a transmission path determines the distance the FP can send a signal. The maximum distance from the FP to customer equipment is 2 km for multi-mode and 15 to 20 km for single-mode, depending on the losses due to splices and connectors.

You can purchase cables with attached connectors that meet the above specifications from any supplier of fiber optic cables.

For more information, see “Cables” (page 89).

STM-1 line automatic protection switching on a 32-port E1 MSA 2-slot FP

SDH line automatic protection switching (line APS), or line protection, is a standards-defined feature enabling a form of line sparing on optical cards.

Line APS is fully described in NN10600-550 *Nortel Networks Multiservice Switch 7400/15000/20000 Common Configuration Procedures*.

To provision line APS, see NN10600-550 *Nortel Networks Multiservice Switch 7400/15000/20000 Common Configuration Procedures* and NN10600-551 *Nortel Networks Multiservice Switch 7400/15000/20000 FP Configuration Reference*.

STM-1 interface characteristics on a 32-port E1 MSA 2-slot FP

When a 32-port E1 MSA FP has the optical ports, the STM-1 ATM portion of the 2-slot FP has the following characteristics as defined in ANSI T1E1.2 95-003.

Table 137
STM-1 ATM general interface characteristics on an E1 MSA 2-slot FP

General optical interface characteristics	
Connector	Dual SC
Bit Rate	155.520 Mbit/s
Line Code	binary non-return-to-zero (NRZ)

Table 138
STM-1 single-mode intermediate reach interface characteristics on a 32-port E1 MSA 2-slot FP

Single-mode Intermediate Reach Optical Interface Characteristics	
Emission Wavelength	1261 nm to 1360 nm
Attenuation Range	0 to 28 dB
Spectral Width: Maximum RMS Width	4 nm
Mean Transmission Power	-5 to 0 dBm
Minimum Extinction Ratio	10.0 dB
Eye Pattern Mask	As per ITU G.957 Fig 2, ANSI T1E1.2/94-002R1-Fig 10, TA-253 Issue 8 Fig 4-2
Maximum receive power (average)	0 dBm

(Sheet 1 of 2)

Table 138 (continued)
STM-1 single-mode intermediate reach interface characteristics on a 32-port E1 MSA 2-slot FP

Single-mode Intermediate Reach Optical Interface Characteristics	
Minimum receive power (average)	-34 dBm
Optical Path Power Penalty	1 dB
(Sheet 2 of 2)	

Table 139
STM-1 multimode interface characteristics on a 32-port E1 MSA 2-slot FP

Multimode Optical Interface Characteristics	
Center Wavelength	1270 nm to 1380 nm
Attenuation Range	0 to 12.5 dB
Maximum Spectral Width	200 nm
Mean Transmission Power	-19 to -14 dBm
Minimum Extinction Ratio	10 dB
Rise time, 20 to 80% Fall time, 20 to 80%	2.5 nanoseconds 2.5 nanoseconds
Overshoot%	10
Rx sensitivity (dBm)	-32.5 to -14 dBm

Connecting to STM-1 ports on a 32-port E1 MSA 2-slot FP

The STM-1 ATM IP sends out a signal stronger than the STM-1 ATM FP can handle. In the case that these cards are used together within a network, a 10 dB attenuator is required for the Tx port of the STM-1 ATM IP. The attenuator will lower the strength of the signal to a maximum -10 dB, an acceptable signal for the STM-1 ATM FP.

Chapter 14
E3 function processors

Frame-based services are supported by the following Nortel Networks Multiservice Switch E3 function processors (FPs):

- “1-port E3 function processor” (page 403)

ATM services are supported by the following Multiservice Switch E1 FPs:

- “3-port E3 ATM function processor” (page 406)
- “3-port E3 ATM IP function processor” (page 408)

1-port E3 function processor

See these sections for information about E3 function processor (FP):

- “1-port E3 faceplate” (page 403)
- “1-port E3 termination panels” (page 404)
- “1-port E3 cable assembly” (page 405)
- “1-port E3 pinouts” (page 405)

1-port E3 faceplate

You can connect the Monitor (Tx monitor) port to test equipment and test the card while it is in service. This port carries a -26 dB tap of the transmit (Tx) connector signal. The E3 FP’s subminiature 9-pin D-type connector provides one-for-one sparing.

Figure 127
1-port E3 faceplate

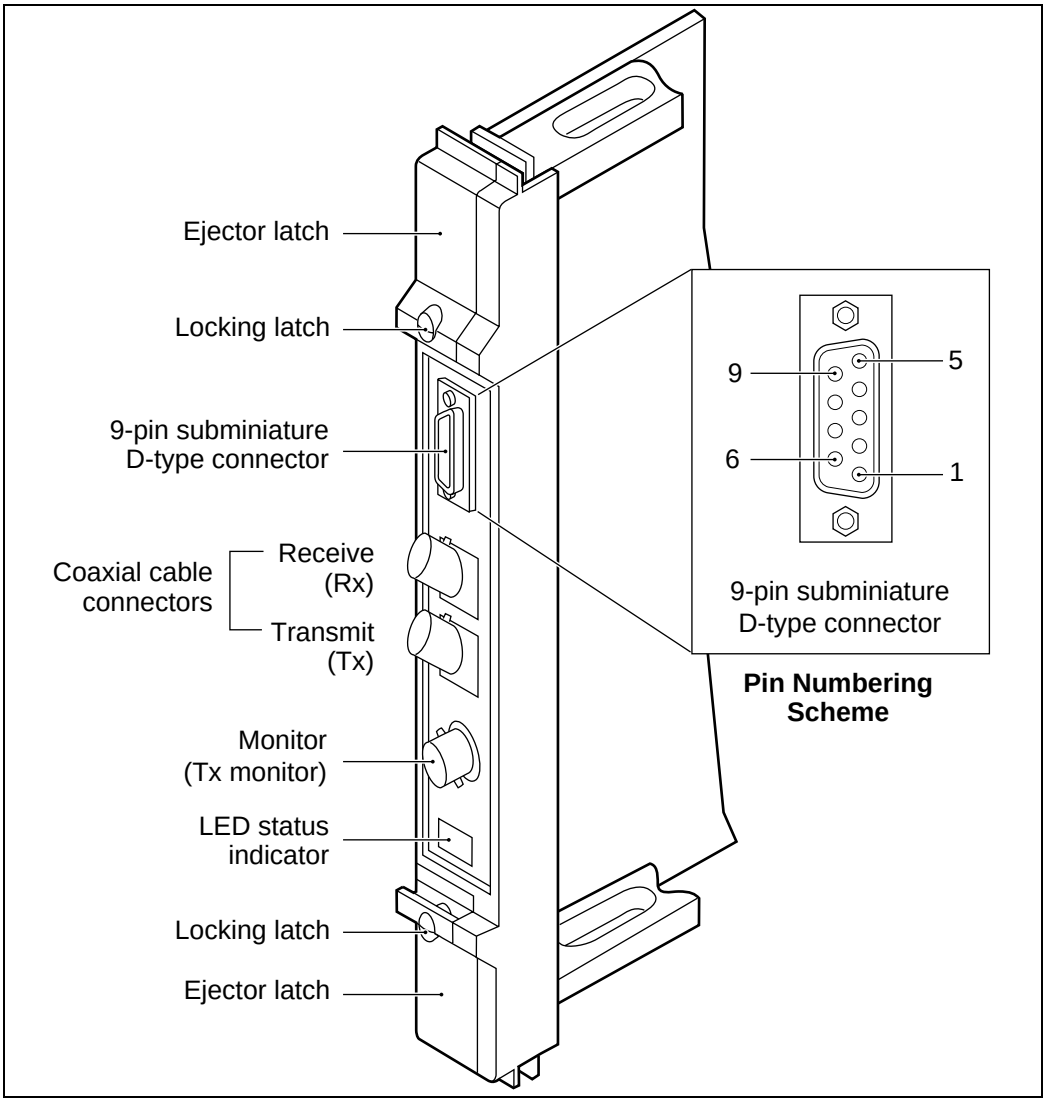

1-port E3 termination panels

The 1-port E3 FP uses the DS3/E3 termination panels. These panels provide a break-out for customer-equipment connections and support sparing.

Before setting up sparing, check the PECs on the faceplates of both the active and spare FPs. The first six digits (four letters and two numbers) of the PECs must match.

For more information about the DS3/E3 termination panels, see “DS3 or E3 termination panels” (page 66).

1-port E3 cable assembly

The maximum cable length for E3 lines to customer equipment is 375 m (1220 ft).

The insertion loss of a cable must not exceed 12 dB measured at 17184 kHz. Insertion loss is proportional to cable length and varies from one type of cable to another. For example, for NT-734 cable, an insertion loss of 12 dB at 17184 kHz is about 375 m of cable.

To meet EMC requirements, any cables connected from the Receive port of the E3 FP or termination panel to customer equipment must be of type NT-734 and include two ferrite beads.

Table 140
1-port E3 cable assembly parts

Qt.	Item	Description
2	NT-734	75-ohm coaxial cable
2	Ferrite kit NTFP54AA	2 ferrites to attach to the cable ends of E3 cables
4	Specialty Connector Company 28P387-1	75-ohm straight BNC plug

For more information, see “Cables” (page 89).

1-port E3 pinouts

This table identifies the pinouts and signal names for the E3 D-type connectors of the sparing control cable.

Table 141
E3 D-type connector pinouts and signal names

Pin number	Signal name
1	Logic ground
2	PSSTATUS
3	PSLOAD
4	PSREG0
5	PSREG1
6	Frame ground
7	PSREG2
8	PSREG3
9	Fused +12V

3-port E3 ATM function processor

See these sections for information about the 3-port E3 ATM function processor (FP):

- “3-port E3 ATM faceplate” (page 406)
- “3-port E3 ATM termination panels” (page 408)
- “3-port E3 ATM cable assembly” (page 408)

3-port E3 ATM faceplate

A small DIN connector is available for one-for-one sparing capability.

Figure 128
3-port E3 ATM faceplate

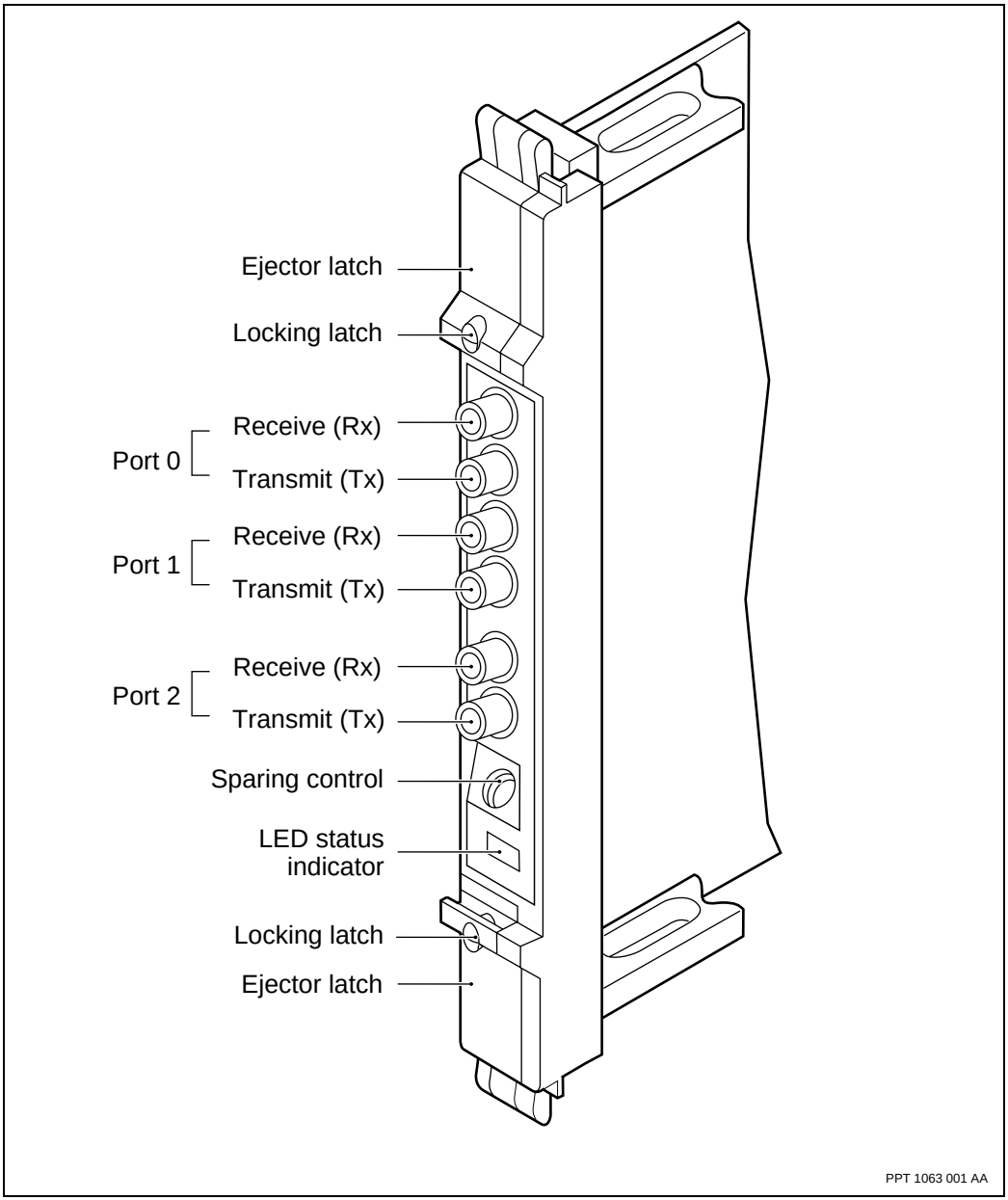

3-port E3 ATM termination panels

You can connect customer equipment directly to the 3-port E3 ATM FP or to its termination panel. The 3-port E3 ATM FP uses the DS3/E3/JT2 ATM termination panels. These termination panels support sparing.

Before setting up sparing, check the seventh and eighth digits of the PECs of the main and spare FPs. If the digits are EA, you can only spare that FP with FPs of the same or later vintage. Earlier vintages (for example, BA and DA) can be spared with each other. The PEC is located on the faceplate of the FP.

For more information about termination panels, see “DS3, E3, or JT2 ATM termination panels” (page 68).

3-port E3 ATM cable assembly

The maximum cable length for unbalanced E3 ATM lines to customer equipment is 375 m (1220 ft). The distance between the FP and the termination panel is part of the total length.

The insertion loss of a cable must not exceed 12 dB measured at 17184 kHz. For example, for NT-734 cable an insertion loss of 12 dB at 17184 kHz is about 375 m of cable.

Table 142
3-port E3 ATM cable assembly parts

Qty	Item	Description	Maximum length
1	NT-734	75-ohm coaxial cable	375 m (1220 ft)
2	Specialty Connector Company 28P387-1 or comparable BNC connector	75-ohm straight BNC plug	

For more information, see “Cables” (page 89).

3-port E3 ATM IP function processor

See these sections for information about the E3 ATM IP function processor (FP):

- “3-port E3 ATM IP faceplate” (page 410)

- “3-port E3 ATM IP termination panels” (page 411)
- “3-port E3 ATM IP cable assembly” (page 411)

Figure 129
3-port E3 ATM IP faceplate

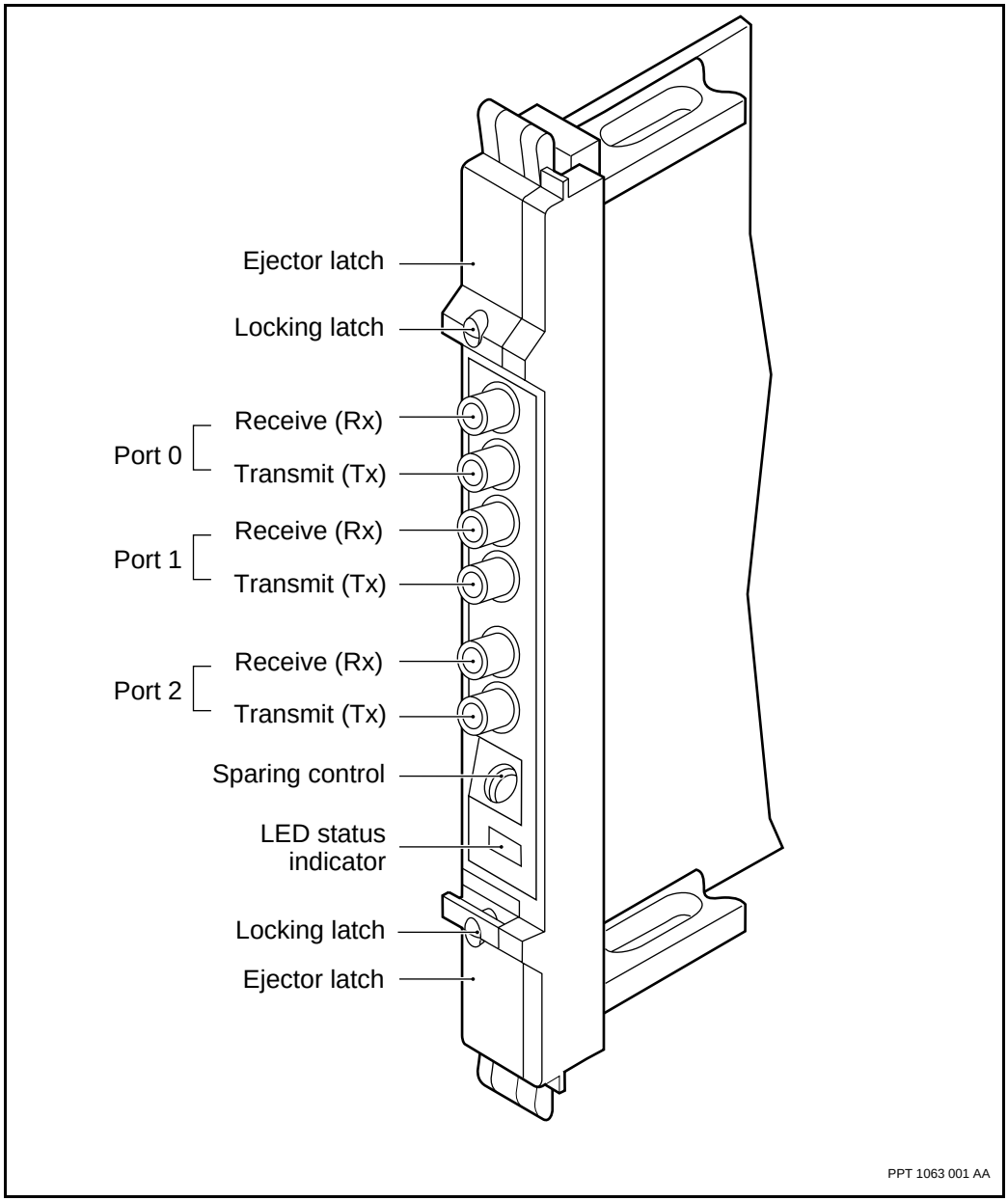

3-port E3 ATM IP termination panels

You can connect customer equipment directly to the 3-port E3 ATM IP or to its termination panel. The 3-port E3 ATM IP FP uses the DS3/E3/JT2 ATM termination panels. These termination panels support sparing.

For more information about the DS3/E3/JT2 ATM termination panels, see “DS3, E3, or JT2 ATM termination panels” (page 68).

3-port E3 ATM IP cable assembly

The maximum cable length for unbalanced E3 ATM IP lines to customer equipment is 375 m (1220 ft). The distance between the FP and the termination panel is part of the total length.

The insertion loss of a cable must not exceed 12 dB measured at 17184 kHz. For example, for NT-734 cable an insertion loss of 12 dB at 17184 kHz is about 375 m (1220 ft) of cable.

Table 143
3-port E3 ATM IP cable assembly parts

Qty	Item	Description	Maximum length
1	NT-734	75-ohm coaxial cable	375 m (1220 ft)
2	Specialty Connector Company 28P387-1 or comparable BNC connector	75-ohm straight BNC plug	

For more information, see “Cables” (page 89).

Chapter 15
OC-3 function processors

ATM services are provided by the following OC-3 function processors (FPs):

- “3-port OC-3 ATM function processor” (page 413)
- “2-port OC-3 ATM IP function processor” (page 417)

3-port OC-3 ATM function processor

See these sections for information about the OC-3 ATM function processor (FP):

- “3-port OC-3 ATM faceplate” (page 413)
- “3-port OC-3 ATM cable assembly” (page 414)
- “3-port OC-3 ATM interface characteristics” (page 415)

3-port OC-3 ATM faceplate

This figure shows the faceplate for the OC-3 ATM FP.

Figure 130
OC-3 ATM faceplate

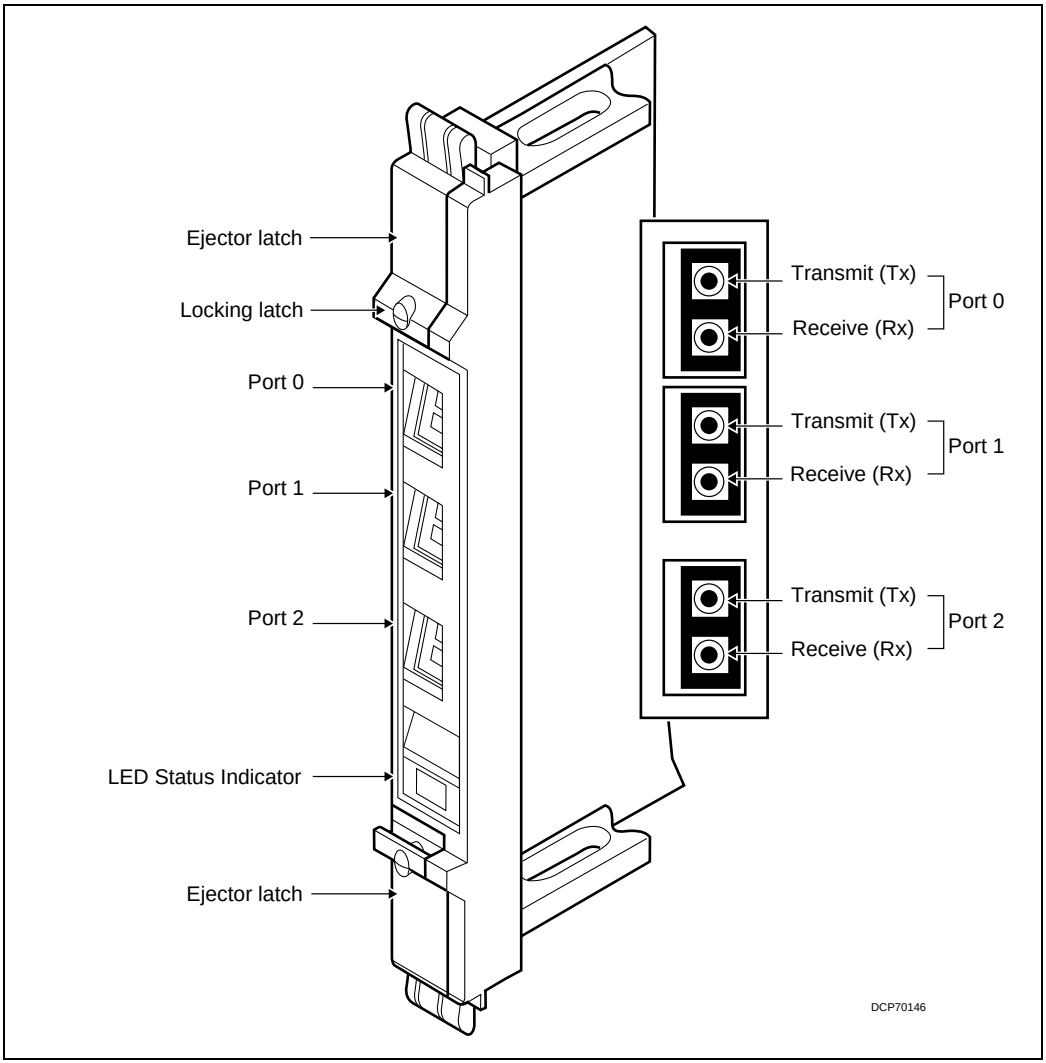

3-port OC-3 ATM cable assembly

The fiber mode type must be the same as the FP (FP) mode type. Use single-mode fiber cable with single-mode FPs and multimode fiber cable with multimode FPs.

Multimode fiber (MMF) cable must conform to ANSI/EIA/TIA-568. The MMF has a core diameter of 62.5 microns and cladding diameter of 125 microns. The modal bandwidth is at least 500 MHz-km and the attenuation is less than 1.0 dB/km at 1300 nm.

The single-mode fiber (SMF) cable has a core diameter of 9 microns and cladding diameter of 125 microns. The attenuation is less than 0.5 dB/Km at 1300 nm.

Connectors should be industry standard duplex SC connectors.

The sum of cable splice losses and connector losses from the FP to customer equipment must not exceed 10 dB for multimode and 12 dB for single-mode. The losses in a transmission path determines the distance the FP can send a signal. The maximum distance from the FP to customer equipment is 2 km for multi-mode and 15 to 20 km for single-mode, depending on the losses due to splices and connectors.

You can purchase cables with attached connectors that meeting the above specifications from any supplier of fiber optic cables.

For more information, see “Cables” (page 89).

3-port OC-3 ATM interface characteristics

The 3-port OC-3 ATM FPs have the following characteristics as defined in ANSI T1E1.2 95-003.

Table 144
3-port OC-3 ATM general interface characteristics

General Optical Interface Characteristics	
Connector	dual SC
Bit Rate	155.52 Mbps
Line Code	binary non-return-to-zero (NRZ)

Table 145
3-port OC-3 ATM single mode intermediate reach interface characteristics

Single Mode Intermediate Reach Optical Interface Characteristics	
Emission Wavelength	1261 nm to 1360 nm
Attenuation	0 to 12 dB
Maximum Dispersion	96 ps/nm
Spectral Width: Maximum RMS Width	7.7 nm
Mean Transmission Power	-15 to -8 dBm
Minimum Extinction Ratio	8.2 dB
Eye Pattern Mask	As per ITU G.957 Fig 2, ANSI T1E1.2/94-002R1-Fig 10, TA-253 Issue 8 Fig 4-2
Maximum receive power (avg)	-8 dBm
Minimum receive power (avg)	-28 dBm
Optical Path Power Penalty	1 dB

Table 146
3-port OC-3 ATM multimode interface characteristics

Multimode Optical Interface Characteristics	
Center Wavelength	1270 nm to 1380 nm
Attenuation	0 to 10 dB
Maximum Spectral Width:	200 nm
Mean Transmission Power	-20 to -14 dBm
Minimum Extinction Ratio	10 dB
(Sheet 1 of 2)	

Table 146 (continued)
3-port OC-3 ATM multimode interface characteristics

Multimode Optical Interface Characteristics	
Rise (fall) time, 10 to 90% (ns)	5
Overshoot%	25
Rx sensitivity (dBm)	-30 to -14
(Sheet 2 of 2)	

2-port OC-3 ATM IP function processor

See these sections for information about the 2-port OC-3 ATM IP function processor (FP):

- “2-port OC-3 ATM IP faceplate” (page 418)
- “2-port OC-3 ATM IP cable assembly” (page 419)
- “2-port OC-3 ATM IP line automatic protection switching” (page 419)
- “2-port OC-3 ATM IP interface characteristics” (page 420)
- “Connecting to OC-3 ATM FPs” (page 421)

2-port OC-3 ATM IP faceplate

Figure 131
2-port OC-3 ATM IP faceplate

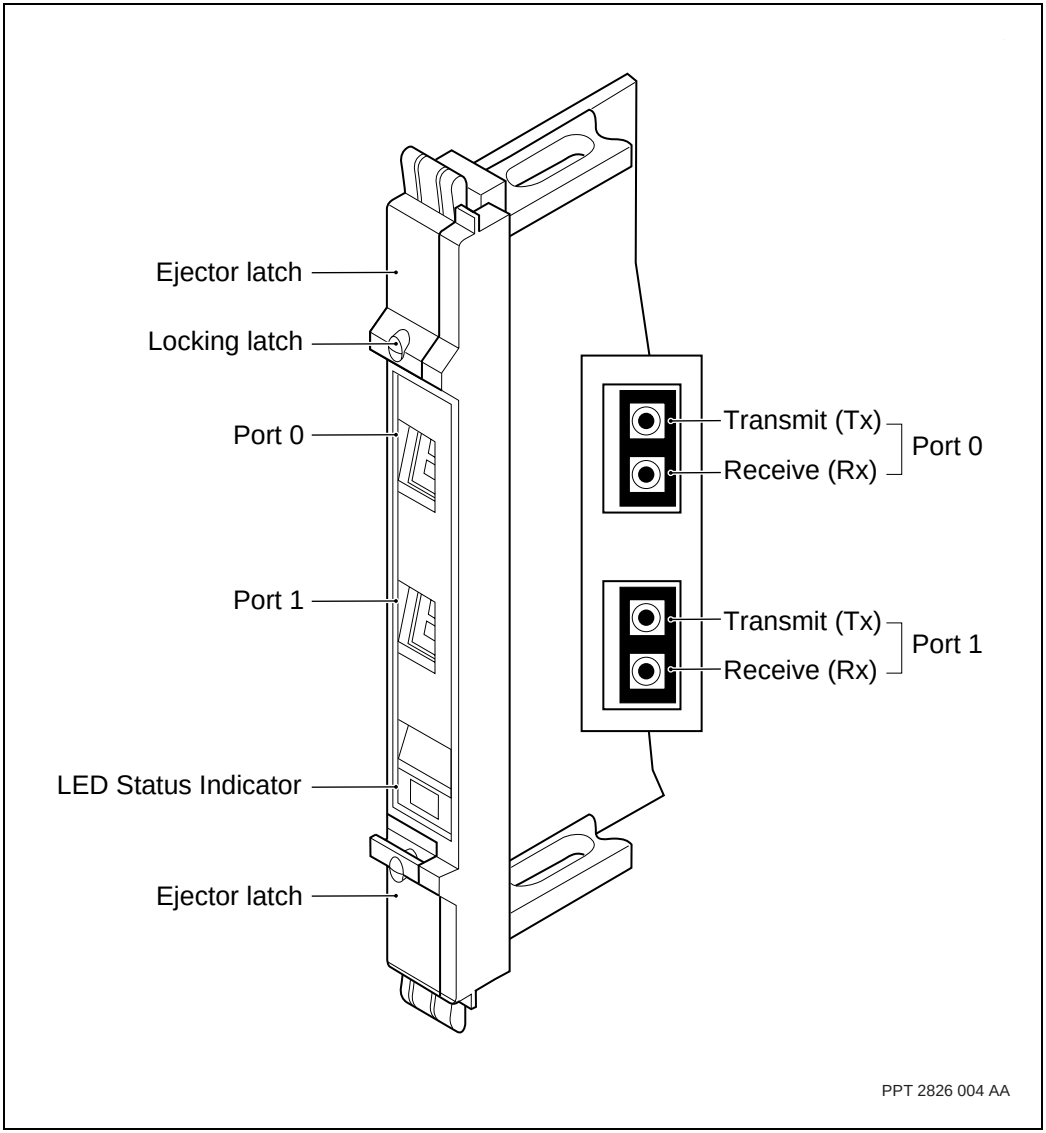

2-port OC-3 ATM IP cable assembly

The fiber mode type must be the same as the FP mode type. Use single-mode fiber cable with single-mode FPs and multimode fiber cable with multimode FPs.

Multimode fiber (MMF) cable must conform to ANSI/EIA/TIA-568. The MMF has a core diameter of 62.5 microns and cladding diameter of 125 microns. The modal bandwidth is at least 500 MHz-km and the attenuation is less than 1.0 dB/km at 1300 nm.

The single-mode fiber (SMF) cable has a core diameter of 9 microns and cladding diameter of 125 microns. The attenuation is less than 0.5 dB/km at 1300 nm.

Connectors should be industry standard duplex SC connectors.

The sum of cable splice losses and connector losses from the function processor to customer equipment must not exceed 7 dB for multimode and 28 dB for single-mode. The losses in a transmission path determines the distance the FP can send a signal. The maximum distance from the FP to customer equipment is 2 km for multi-mode and 40 km for single-mode, depending on the losses due to splices and connectors.

You can purchase cables with attached connectors that meeting the above specifications from any supplier of fiber optic cables.

For more information, see “Cables” (page 89).

2-port OC-3 ATM IP line automatic protection switching

SONET line automatic protection switching (line APS), or line protection, is a standards-defined feature enabling a form of line sparing on optical cards.

Line APS is fully described in NN10600-550 *Nortel Networks Multiservice Switch 7400/15000/20000 Common Configuration Procedures*.

To provision line APS, see NN10600-550 *Nortel Networks Multiservice Switch 7400/15000/20000 Common Configuration Procedures* and NN10600-551 *Nortel Networks Multiservice Switch 7400/15000/20000 FP Configuration Reference*.

2-port OC-3 ATM IP interface characteristics

The 2-port OC-3 ATM IP FPs have the following characteristics as defined in ANSI T1E1.2 95-003.

Table 147
2-port OC-3 ATM IP general interface characteristics

General Optical Interface Characteristics	
Connector	dual SC
Bit Rate	155.520 Mbps
Line Code	binary non-return-to-zero (NRZ)

Table 148
2-port OC-3 ATM IP single mode long reach interface characteristics

Single Mode Long Reach Optical Interface Characteristics	
Emission Wavelength	1261 nm to 1360 nm
Attenuation Range	0 to 28 dB
Spectral Width: Maximum RMS Width	4 nm
Mean Transmission Power	-5 to 0 dBm
Minimum Extinction Ratio	10.0 dB
Eye Pattern Mask	As per ITU G.957 Fig 2, ANSI T1E1.2/94-002R1-Fig 10, TA-253 Issue 8 Fig 4-2
Maximum receive power (avg)	0 dBm
Minimum receive power (avg)	-34 dBm
Optical Path Power Penalty	1 dB

Table 149
2-port OC-3 ATM IP multimode interface characteristics

Multimode Optical Interface Characteristics	
Center Wavelength	1270 nm to 1380 nm
Attenuation Range	0 to 12.5 dB
Maximum Spectral Width:	200 nm
Mean Transmission Power	-19 to -14 dBm
Minimum Extinction Ratio	10 dB
Rise time, 20 to 80% Fall time, 20 to 80%	2.5 nanoseconds 2.5 nanoseconds
Overshoot%	10
Rx sensitivity (dBm)	-32.5 to -14 dBm

Connecting to OC-3 ATM FPs

The OC-3 ATM IP sends out a signal stronger than the OC-3 ATM FP can handle. In the case that these cards are used together within a network, a 10 dB attenuator is required for the Tx port of the OC-3 ATM IP. The attenuator will lower the strength of the signal to a maximum -10 dB, an acceptable signal for the OC-3 ATM FP.

Chapter 16
Ethernet function processors

The following Nortel Networks Multiservice Switch Ethernet function processors (FPs) support IP services:

- “2-port Ethernet 100BaseT function processor” (page 423)
- “4-port 10/100BaseT Ethernet function processor” (page 427)
- “6-port Ethernet 10BaseT function processor” (page 432)
- “8-port 10/100BaseT Ethernet function processor” (page 439)

2-port Ethernet 100BaseT function processor

The 2-port Ethernet 100BaseT FP has PEC NTNQ37 and software name 2pEth100BaseT. See these sections for information about the FP:

- “2-port Ethernet 100BaseT FP faceplate” (page 424)
- “2-port Ethernet 100BaseT cable assemblies” (page 425)
- “2-port Ethernet 100BaseT pinouts” (page 425)

2-port Ethernet 100BaseT FP faceplate

Figure 132
Faceplate of a 2-port Ethernet 100BaseT FP with PEC NTNQ37

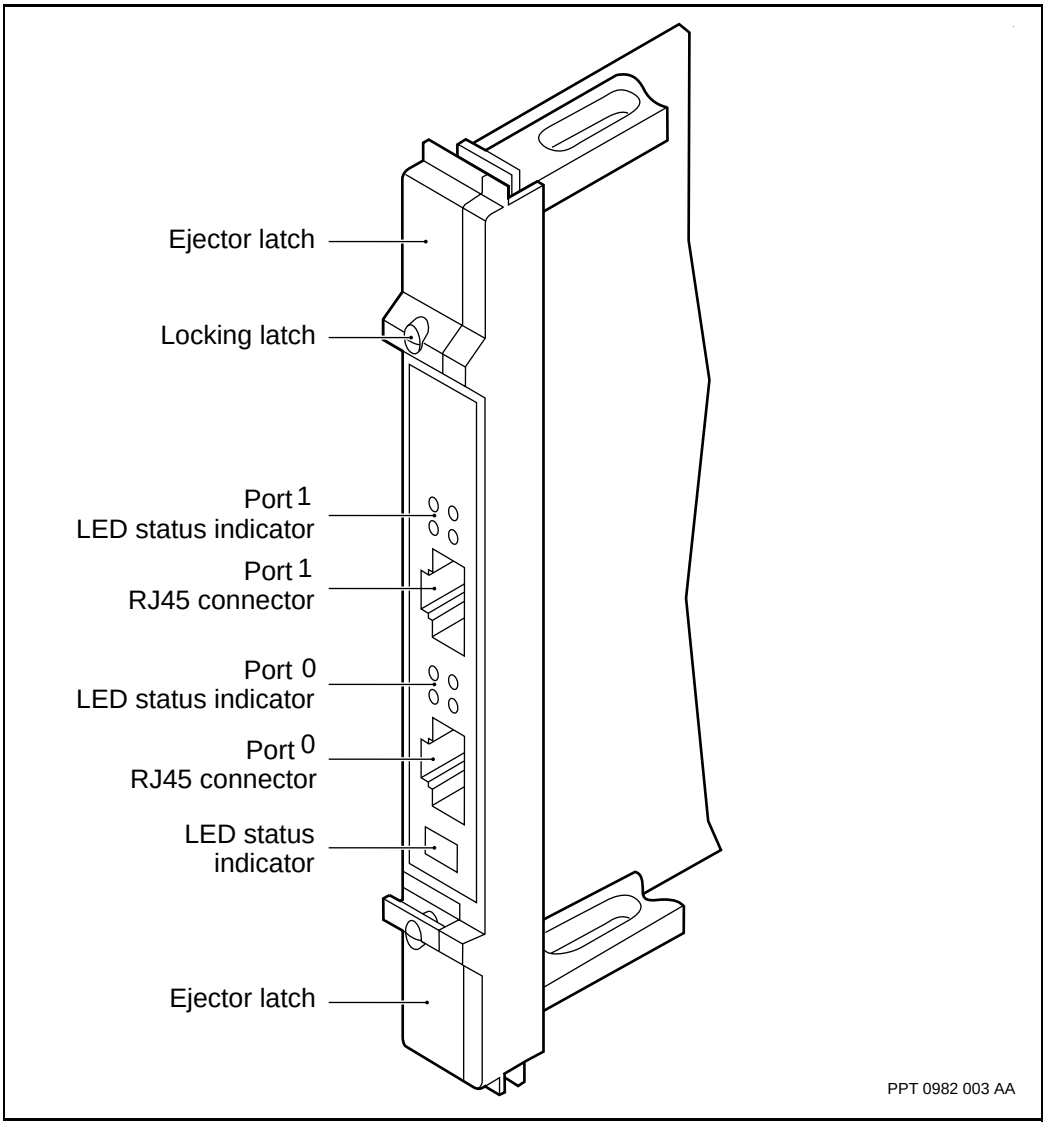

2-port Ethernet 100BaseT cable assemblies

The minimum grade of cable required to run an NTNQ37 FP is category 5 unshielded twisted pair (UTP). Certain installations may require a higher grade cable (for example, Enhanced Category 5) to overcome cross-talk, immunity and other noise problems.

The maximum cable length between Ethernet devices is 100 m (328 ft). However, cabling characteristics can reduce the maximum distance. The maximum cable length for Ethernet lines to customer equipment is detailed in the specification IEEE 802.3.

For general information about FP cables, see “Cables” (page 89).

2-port Ethernet 100BaseT pinouts

The figure “RJ-45 connector pin scheme for Ethernet 100BaseT” (page 425) and table “RJ-45 connector pinout for Ethernet 100BaseT” (page 426) show the pin assignments for the RJ-45 connectors on the faceplate of the NTNQ37 FP.

Figure 133
RJ-45 connector pin scheme for Ethernet 100BaseT

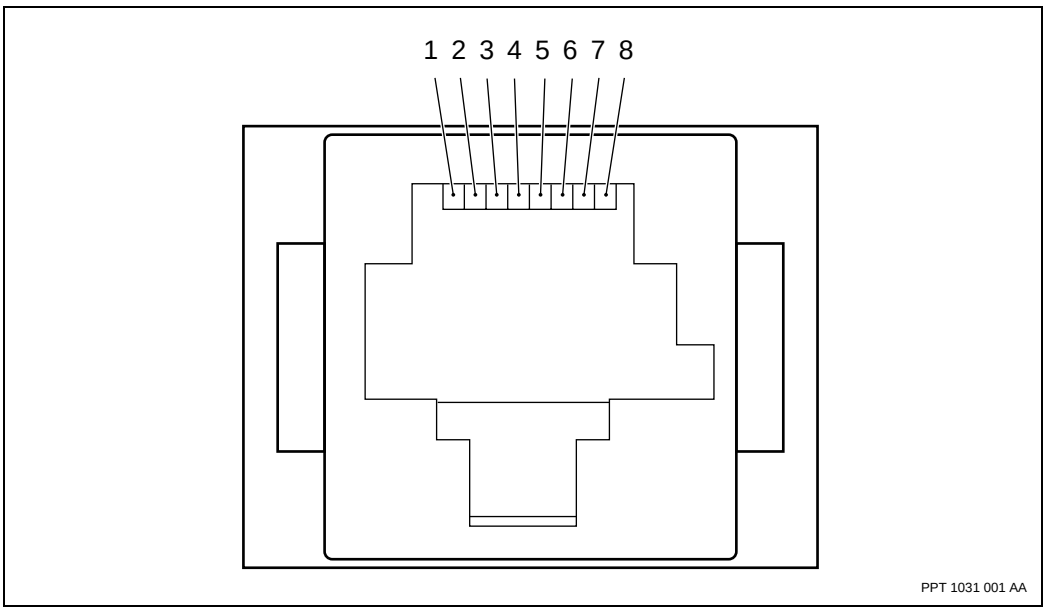

Table 150
RJ-45 connector pinout for Ethernet 100BaseT

RJ-45 pin	Signal
1	Transmit + (Tx+)
2	Transmit - (Tx-)
3	Receive + (Rx+)
4	not used
5	not used
6	Receive - (Rx-)
7	not used
8	not used

4-port 10/100BaseT Ethernet function processor

The 4-port 10/100BaseT Ethernet FP has PEC NTNQ95 and software name 4pEth100BaseT. It weighs 1.1 kg (2.42 lb) and draws 32 W of power. See these sections for information about the FP:

- “4-port Ethernet 10/100BaseT faceplate” (page 427)
- “4-port Ethernet 100BaseT cable assemblies” (page 428)
- “4-port Ethernet 100BaseT pinouts” (page 429)

4-port Ethernet 10/100BaseT faceplate

The 4pEth100BaseT FP with PEC (NTNQ95) appears identical to the 8pEth100BaseT FP with PEC (NTNQ92), but there are only 4 functional ports (ports 0-3) on the 4pEth100BaseT FP. Only ports 0 to 3 on the 4pEth100BaseT FP are provisionable.

The Ethernet interfaces of the faceplate are for unkeyed RJ-45 connectors. Each interface has two status LEDs, one for collision and the other for link activity. Refer to the figure “Faceplate of a 4-port Ethernet 10/100BaseT FP with PEC NTNQ95” (page 428). When a collision occurs, the LED flashes yellow once per occurrence. Otherwise the collision LED is unlit. For link activity

- a green LED indicates the link is up but idle with a success of auto-negotiation and receipt of link pulses
- a flashing green LED indicates activity is occurring for either the transmit (Tx) or receive (Rx) direction

Figure 134
Faceplate of a 4-port Ethernet 10/100BaseT FP with PEC NTNQ95

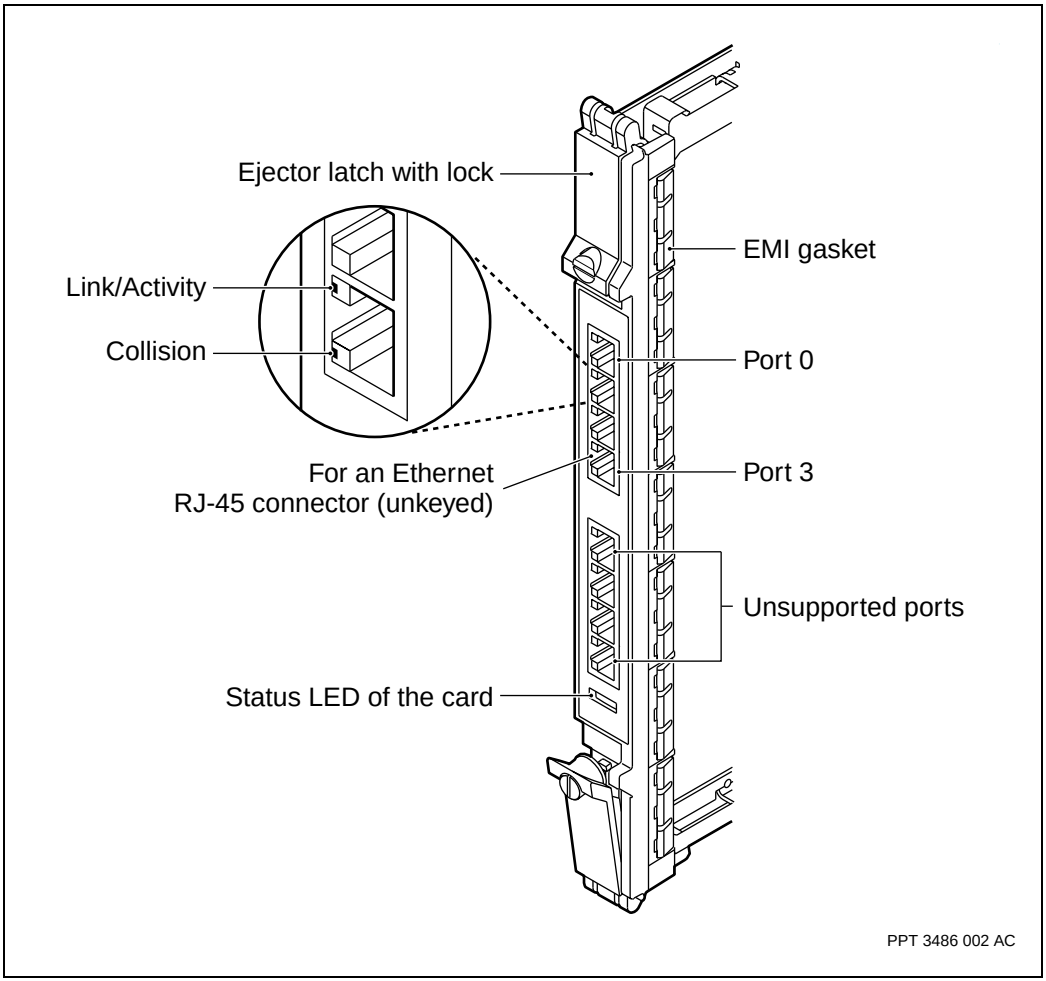

4-port Ethernet 100BaseT cable assemblies

The minimum grade of cable required to run an NTNQ95 FP is Category 5 unshielded twisted pair (UTP). Certain installations may require a higher grade cable (for example, Enhanced Category 5) to overcome cross-talk, immunity and other noise problems.

To ensure that the FP complies to Class B EMI, you need STP5 (shielded) cables and one ferrite kit (NTNQ98) for each set of four Ethernet ports. Nortel Networks offers the prefabricated crossover cable with part number A0822236 or straight-through cable with part number A0821568. Each of these STP5 cables is 10 m (32.8 ft.). You need one cable per port.

To ensure that the FP complies to Class A EMI, you must connect UTP5 cable from the far-end port up to the FP port. You need one cable per port. Nortel Networks also offers a prefabricated LAN adapter cable assembly with PEC NTHQ11BA. The NTHQ11BA LAN adapter cable assembly must be connected to each port at the faceplate in order to be Class A EMI compliant.

The maximum cable length between Ethernet end-point interfaces is 100 m (328 ft). However, cabling characteristics can reduce the maximum distance. The maximum cable length for Ethernet lines to customer equipment is detailed in the specification IEEE 802.3.

For general information about FP cables, see “Cables” (page 89).

4-port Ethernet 100BaseT pinouts

The figure “RJ-45 connector pin scheme for Ethernet 100BaseT” (page 442) and table “RJ-45 connector pinout for Ethernet 100BaseT” (page 426) show the pin assignments for the RJ-45 connectors on the faceplate of the 4-port Ethernet 100BaseT FP (NTNQ95).

Figure 135
RJ-45 connector pin scheme for Ethernet 100BaseT

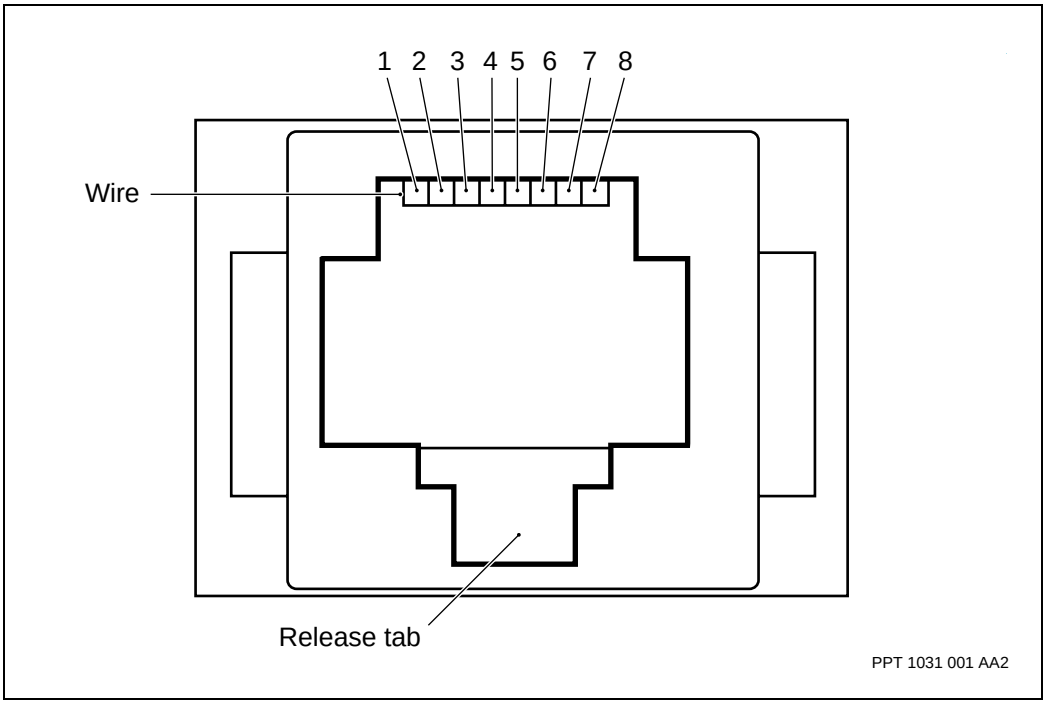

Table 151
RJ-45 connector pinout for 100BaseT

RJ-45 pin	Signal
1	Transmit + (Tx+)
2	Transmit - (Tx-)
3	Receive + (Rx+)
4	not used
5	not used
6	Receive - (Rx-)
(Sheet 1 of 2)	

Table 151
RJ-45 connector pinout for 100BaseT

RJ-45 pin	Signal
7	not used
8	not used
(Sheet 2 of 2)	

6-port Ethernet 10BaseT function processor

The 6-port Ethernet 10BaseT FP has PEC NTNQ36 and software name 6pEth10BaseT. See these sections for information about the FP:

- “6-port Ethernet 10BaseT FP faceplate” (page 433)
- “6-port Ethernet 10BaseT termination panels” (page 434)
- “6-port Ethernet 10BaseT cable assemblies” (page 434)
- “6-port Ethernet 10BaseT pinouts” (page 434)

6-port Ethernet 10BaseT FP faceplate

Figure 136
Faceplate of a 6-port Ethernet 10BaseT FP with PEC NTNQ36

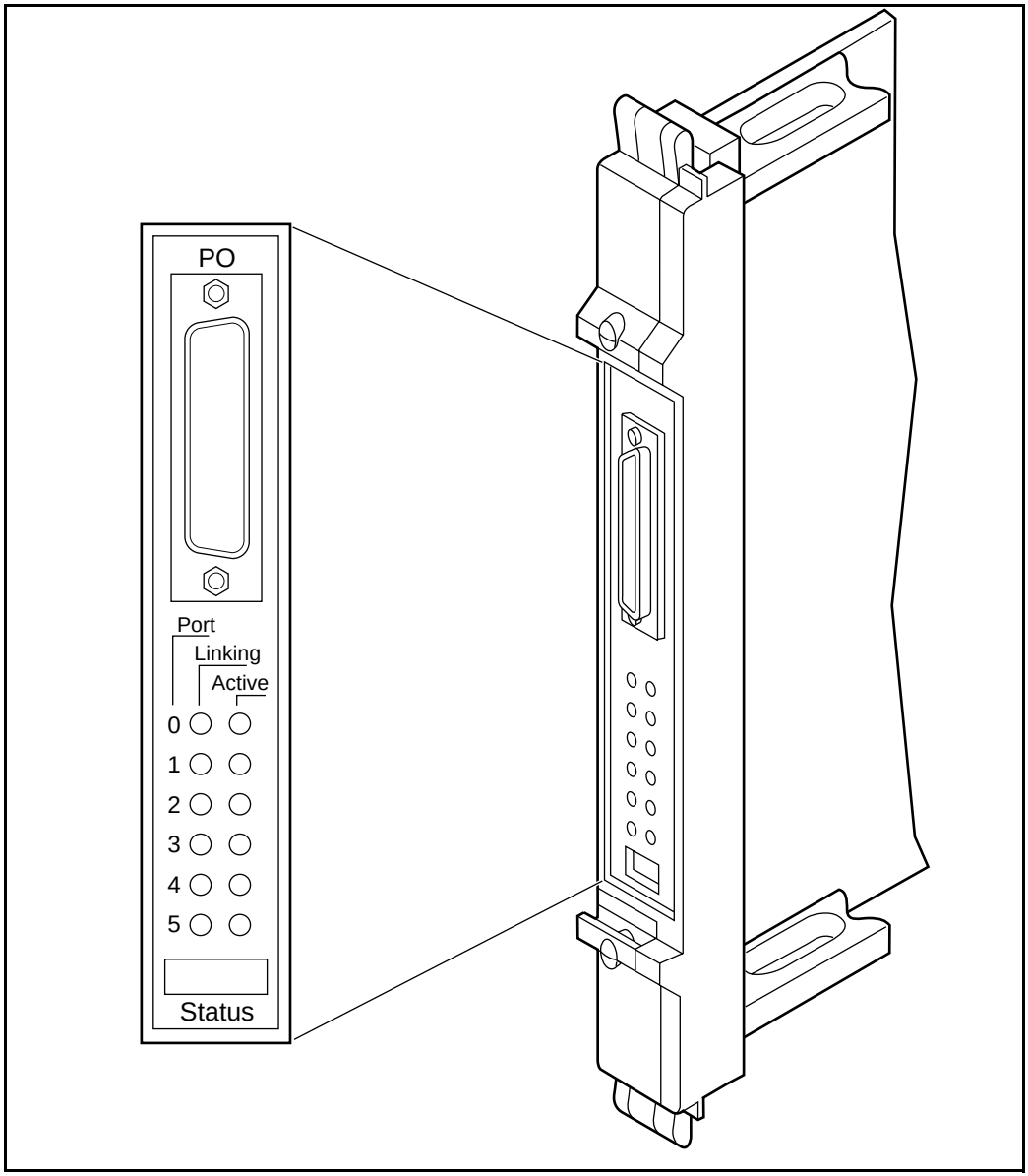

6-port Ethernet 10BaseT termination panels

The 6-port Ethernet 10BaseT uses the Ethernet termination panels. These panels provide a break-out for customer equipment connections and provide each port with its own access.

Each termination panel has six standard 10BaseT Ethernet connectors for routing signals to external equipment. Any standard 8-pin 10BaseT Ethernet cable connector (customer-supplied) can be attached to these connectors.

For more information about the Ethernet termination panels, see “Ethernet termination panels” (page 60).

6-port Ethernet 10BaseT cable assemblies

The 10BaseT configuration for the NTNQ36 FP uses

- unshielded twisted-pair (UTP) customer-equipment cabling configured in a star
- a wiring hub with a maximum distance of 100 m (328 ft) between Ethernet devices. The maximum distance can be less, based on cabling characteristics.

The maximum cable length for Ethernet lines to customer equipment is detailed in the specification IEEE 802.3. The distance between the FP and the termination panel is part of the total length.

Using unshielded cable for the NTNQ36 FP cable can void compliance with EMI or RFI regulations.

For general information about FP cables, see “Cables” (page 89).

6-port Ethernet 10BaseT pinouts

See the following sections for information about Ethernet pinouts:

- “6-port Ethernet 10BaseT faceplate and termination panel pinout” (page 435)
- “6-port Ethernet 10BaseT faceplate connector pin scheme” (page 437)
- “6-port Ethernet 10BaseT termination panel connector pinout” (page 437)

- “RJ-45 connector pin scheme for Ethernet 10BaseT” (page 438)

Table 152
6-port Ethernet 10BaseT faceplate and termination panel pinout

Front panel connector pin	Termination panel connector pin	Cable color code	Signal
23	26	white/blue stripe	P0Tx+ (Port 0 transmit positive)
38	1	blue/white stripe	P0Tx- (Port 0 transmit negative)
6	27	white/orange	P0Rx+ (Port 0 receive positive)
22	2	orange/white stripe	P0Rx- (Port 0 receive negative)
25	28	white/green	P1Tx+
40	3	green/white stripe	P1Tx-
8	29	white/brown	P1Rx+
24	4	brown/white stripe	P1Rx-
27	30	white/slate stripe	P2Tx+
42	5	slate/white stripe	P2Tx-
10	31	red/blue stripe	P2Rx+
26	6	blue/red stripe	P2Rx-
20	32	red/orange stripe	P3Tx+
35	7	orange/red stripe	P3Tx-
5	33	red/green stripe	P3Rx+
21	8	green/red stripe	P3Rx-
18	34	red/brown stripe	P4Tx+
33	9	brown/red stripe	P4Tx-
3	35	red/slate stripe	P4Rx+
19	10	slate/red stripe	P4Rx-
16	36	black/blue stripe	P5Tx+
31	11	blue/black stripe	P5Tx-
1	37	black/orange stripe	P5Rx+
(Sheet 1 of 2)			

Table 152 (continued)
6-port Ethernet 10BaseT faceplate and termination panel pinout

Front panel connector pin	Termination panel connector pin	Cable color code	Signal
17	12	orange/black stripe	P5Rx-
Note: You do not need to connect the following pin on the front panel connector: 2, 4, 7, 9, 11, 12, 13, 14, 15, 28, 29, 30, 32, 34, 36, 37, 39, 41, 43, 44. The connector housing supplies the frame ground.			
(Sheet 2 of 2)			

Figure 137
6-port Ethernet 10BaseT faceplate connector pin scheme

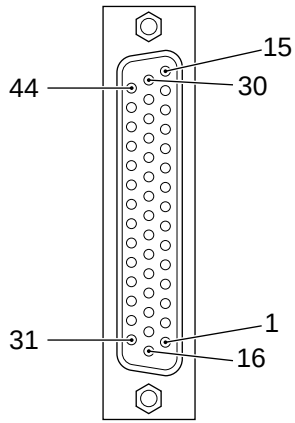

PPT 0000 001 AA

Table 153
6-port Ethernet 10BaseT termination panel connector pinout

Pin number	Signal name
1	Tx+
2	Tx-
3	Rx+
4	not used
5	not used
6	Rx-
7	not used
8	not used

Figure 138
RJ-45 connector pin scheme for Ethernet 10BaseT

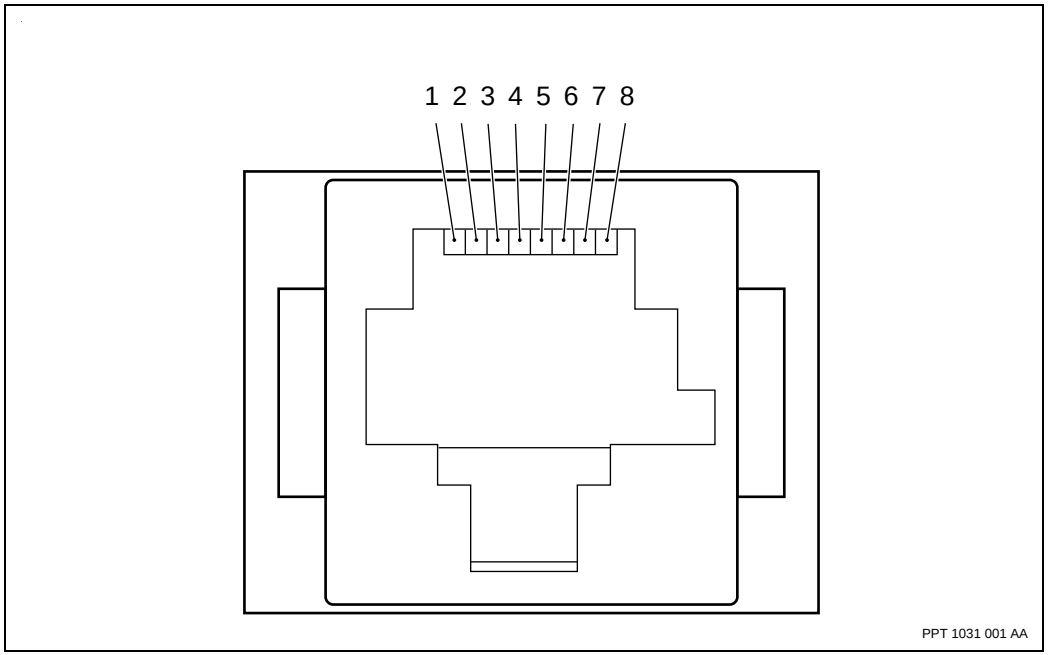

8-port 10/100BaseT Ethernet function processor

The 8-port 10/100BaseT Ethernet FP has PEC NTNQ92 and software name 8pEth100BaseT. It weighs 1.1 kg (2.42 lb) and draws 32 W of power. See these sections for information about the FP:

- “8-port Ethernet 10/100BaseT faceplate” (page 439)
- “8-port Ethernet 100BaseT cable assemblies” (page 440)
- “8-port Ethernet 100BaseT pinouts” (page 441)

8-port Ethernet 10/100BaseT faceplate

The Ethernet interfaces of the faceplate are for unkeyed RJ-45 connectors. Each interface has two status LEDs, one for collision and the other for link activity. Refer to the figure “Faceplate of an 8-port Ethernet 10/100BaseT FP with PEC NTNQ92” (page 440). When a collision occurs, the LED flashes yellow once per occurrence. Otherwise the collision LED is unlit. For link activity

- a green LED indicates the link is up but idle with a success of auto-negotiation and receipt of link pulses
- a flashing green LED indicates activity is occurring for either the transmit (Tx) or receive (Rx) direction

Figure 139
Faceplate of an 8-port Ethernet 10/100BaseT FP with PEC NTNQ92

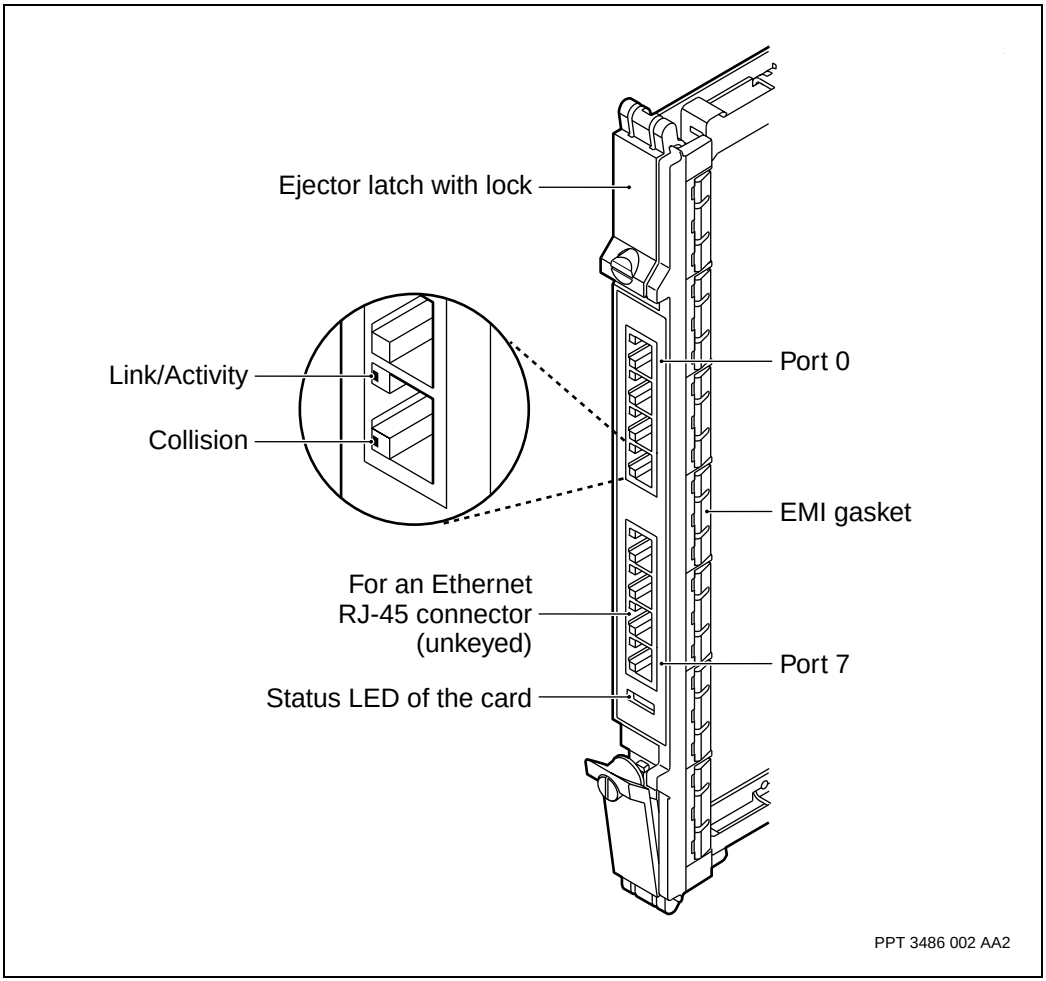

8-port Ethernet 100BaseT cable assemblies

The minimum grade of cable required to run an NTNQ92 FP is category 5 unshielded twisted pair (UTP). Certain installations may require a higher grade cable (for example, Enhanced Category 5) to overcome cross-talk, immunity and other noise problems.

To ensure that the FP complies to Class B EMI, you need STP5 shielded cables and one ferrite kit (NTNQ98) for each set of four Ethernet ports. Nortel Networks offers the prefabricated crossover cable with part number A0822236 or straight-through cable with part number A0821568. Each of these STP5 cables is 10 m (32.8 ft.). You need one cable per port.

To ensure that the FP complies to Class A EMI, you must connect UTP5 cable from the far-end port up to the FP port. You need one cable per port. Nortel Networks also offers a prefabricated LAN adapter cable assembly with PEC NTHQ11BA.

The maximum cable length between Ethernet end-point interfaces is 100 m (328 ft). However, cabling characteristics can reduce the maximum distance. The maximum cable length for Ethernet lines to customer equipment is detailed in the specification IEEE 802.3.

For general information about FP cables, see “Cables” (page 89).

8-port Ethernet 100BaseT pinouts

The figure “RJ-45 connector pin scheme for Ethernet 100BaseT” (page 442) and table “RJ-45 connector pinout for Ethernet 100BaseT” (page 426) show the pin assignments for the RJ-45 connectors on the faceplate of the 8-port Ethernet 100BaseT FP (NTNQ92).

Figure 140
RJ-45 connector pin scheme for Ethernet 100BaseT

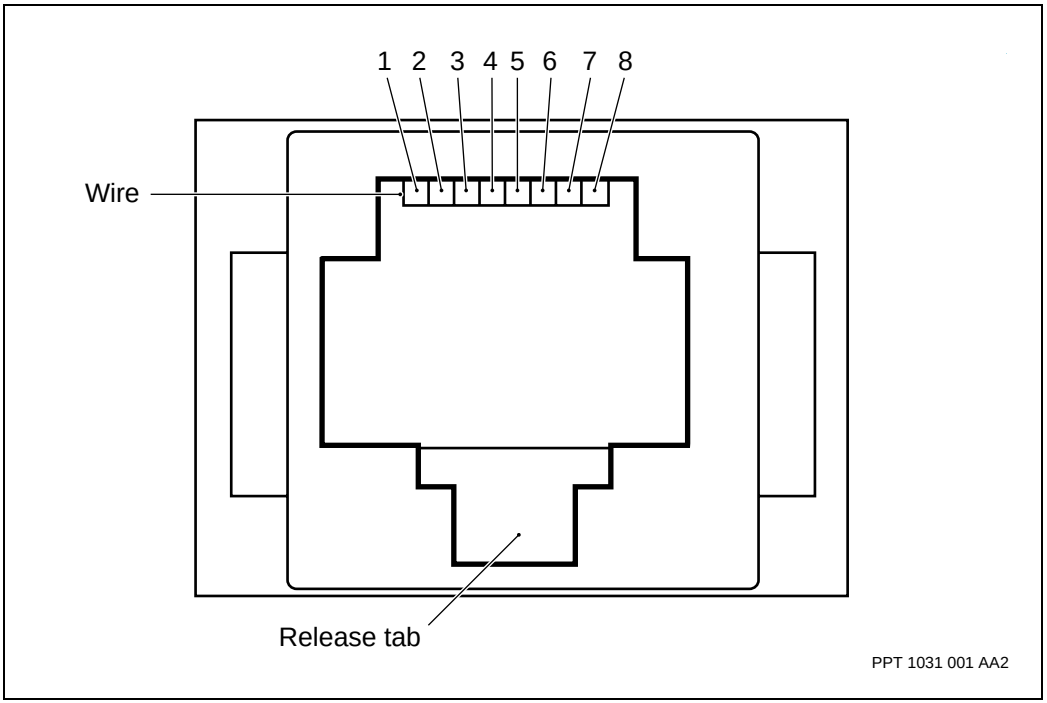

Table 154
RJ-45 connector pinout for 100BaseT

RJ-45 pin	Signal
1	Transmit + (Tx+)
2	Transmit - (Tx-)
3	Receive + (Rx+)
4	not used
5	not used
6	Receive - (Rx-)
(Sheet 1 of 2)	

Table 154
RJ-45 connector pinout for 100BaseT

RJ-45 pin	Signal
7	not used
8	not used
(Sheet 2 of 2)	

Chapter 17
2-port STM-1 electrical ATM FP

See these sections for information about the 2-port STM-1 electrical ATM function processor (FP):

- “2-port STM-1 electrical ATM IP FP faceplate” (page 445)
- “2-port STM-1 electrical channelized CES/ATM/IMA faceplate” (page 447)
- “2-port STM-1 electrical 1:1 sparing panel (NTPS92AA)” (page 448)
- “2-port STM-1 electrical cable assemblies” (page 449)

2-port STM-1 electrical ATM IP FP faceplate

You can use the monitor ports (TXM0 and TXM1) to connect to test equipment and test the card while it is in service. It carries a -26 dB tap of the transmit (Tx) connector signal. The 9-pin subminiature D-type connector provides one-for-one sparing capability. The monitor ports are also 75-ohm BNC connectors.

> ***Note:*** The 2pSTM1eCh FP and control cable are intra-building and use shielded cabling where the shield is grounded at both ends.

Figure 141
Faceplate of a 2-port STM-1 electrical ATM IP FP

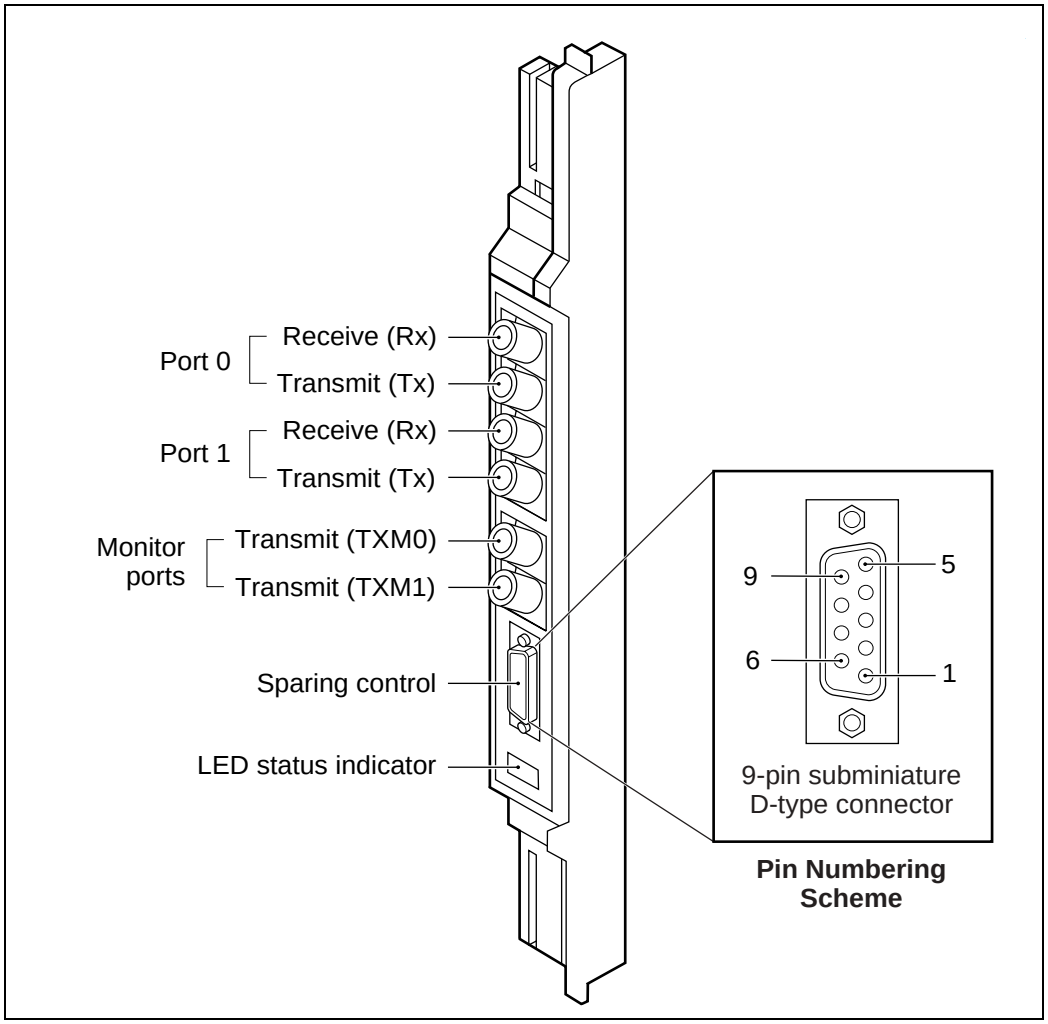

2-port STM-1 electrical channelized CES/ATM/IMA faceplate

The 2pSTM1eCh is a dual slot function processor (FP). You can use the monitor ports (TXM0 and TXM1) to connect to test equipment and test the card while it is in service. It carries a -26 dB tap of the transmit (Tx) connector signal. The 9-pin subminiature D-type connector provides one-for-one sparing capability. The monitor ports are also 75-ohm BNC connectors.

> ***Note:*** The 2pSTM1eCh FP and control cable are intra-building and use shielded cabling where the shield is grounded at both ends.

Figure 142
Faceplate of a 2-port STM-1 electrical channelized CES/ATM/IMA FP

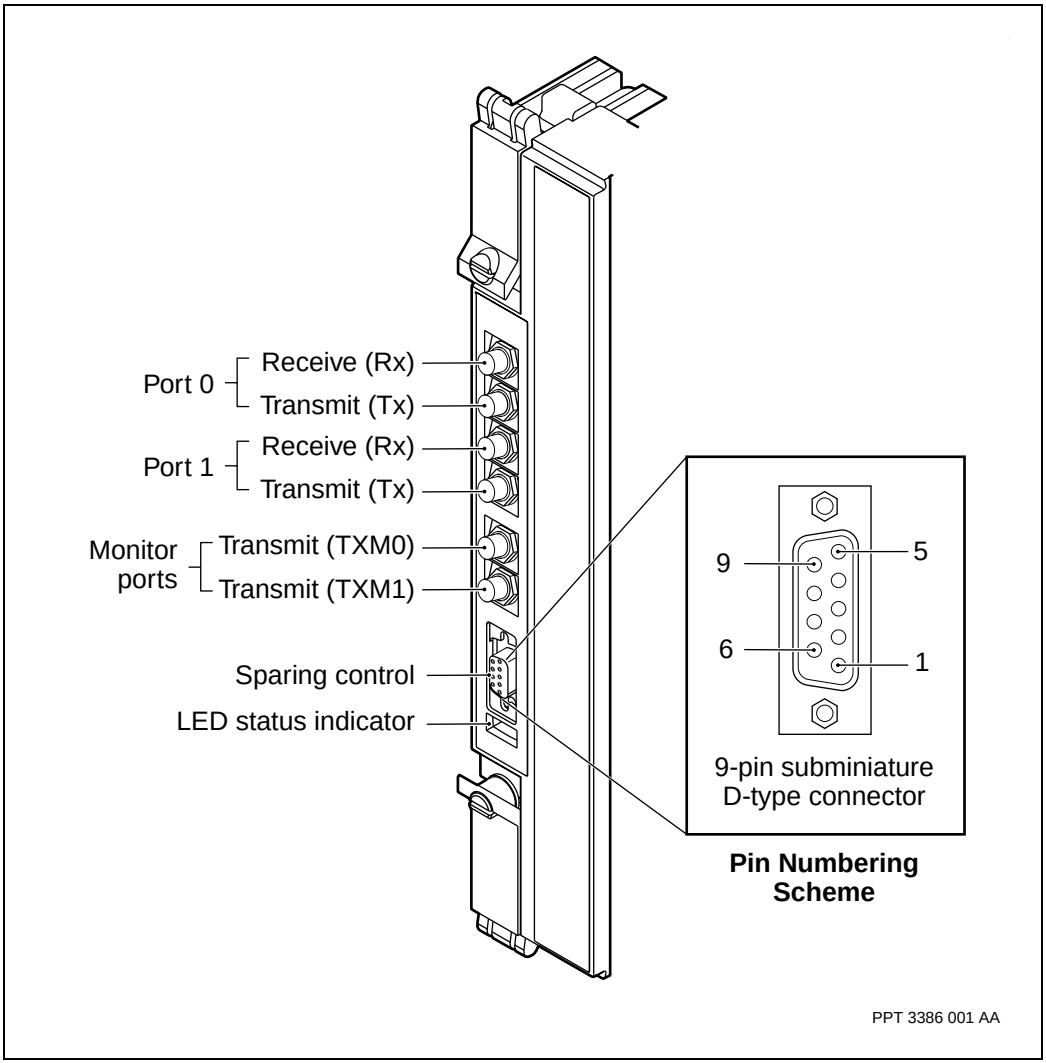

2-port STM-1 electrical 1:1 sparing panel (NTPS92AA)

The 2-port STM-1 electrical (STM-1e) one-for-one sparing panel (NTPS92AA) provides one-for-one (1:1) sparing between two 2-port STM-1 electrical non-channelized or channelized FPs.

For more information about the STM-1e one-for-one sparing panel, see “2-port STM-1 electrical 1:1 sparing panel” (page 77).

2-port STM-1 electrical cable assemblies

The cable assemblies from the 2-port STM-1 electrical FP faceplate to the NTPS92AA sparing panel faceplate include a control cable from each FP and a signal cable from the transmit (Tx) and receive (Rx) ports for both the main and spare connections (shown in the figure “2-port STM-1e 1:1 sparing panel - PEC NTPS92AA” (page 79)). The control cable (pins 3 and 4) enables the CP to tell the sparing panel relays to change to the back-up FP so that it takes over the traffic.

The cable assemblies can be prefabricated from Nortel Networks or custom made by yourself.

When measuring the exact path from the FP to the far end, the sparing panel is not considered to be the far end. It is only part of the total length.

2-port STM-1e prefabricated cable assemblies

The optional prefabricated cable assemblies can be used to connect the FP to the sparing panel or other equipment with the SMB BT43 receptacles. These cables do not require ferrite beads for EMI shielding. See the table “Prefabricated cable assemblies for the 2-port STM-1e 1:1 sparing panel or FP” (page 449). Otherwise, you must use your own cables as described in “2-port STM-1e custom-made cable assemblies” (page 451).

Table 155
Prefabricated cable assemblies for the 2-port STM-1e 1:1 sparing panel or FP

PEC	Length	Type of cable assembly
NTPS11AA	1.5 m (4.9 ft)	control with standard DB9 D-sub connector
NTPS11AB	3.0 m (9.8 ft)	control with standard DB9 D-sub connector
NTPS11AC	15 m (49.2 ft)	control with standard DB9 D-sub connector
NTPS12AA	1.5 m (4.9 ft)	signal with the SMB BT43 (or SMZ) connector

(Sheet 1 of 2)

Table 155 (continued)
Prefabricated cable assemblies for the 2-port STM-1e 1:1 sparing panel or FP

PEC	Length	Type of cable assembly
NTPS12AB	3.0 m (9.8 ft)	signal with the SMB BT43 (or SMZ) connector
NTPS12AC	15 m (49.2 ft)	signal with the SMB BT43 (or SMZ) connector
(Sheet 2 of 2)		

Figure 143
Prefabricated cable assembly NTPS12 used between the FP and the sparing panel

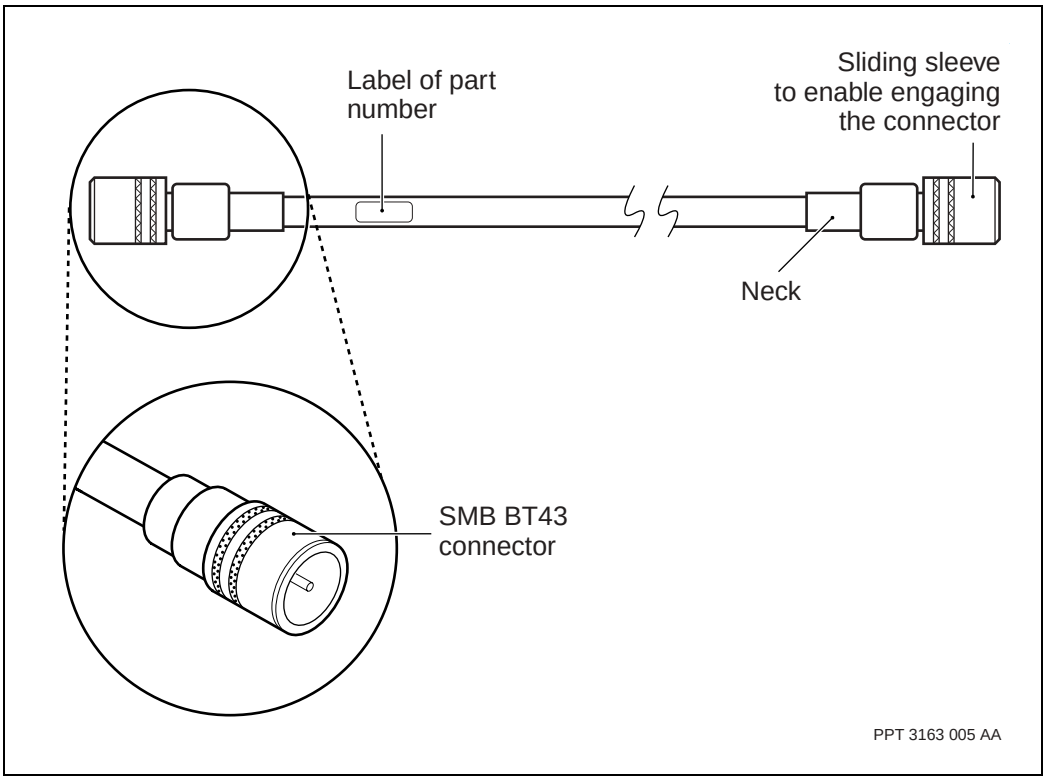

2-port STM-1e custom-made cable assemblies

The maximum cable length for STM-1e lines to customer equipment is 100 m (328 ft.). The length of cable between the FP and sparing panel must be considered part of the length. The insertion loss of each cable must not exceed 12.7 dB measured at 78 MHz. Insertion loss is proportional to cable length and varies from one type of cable to another.

To make your own custom-length signal cable assembly, use the parts identified in the table "2-port STM-1 electrical coax cable assembly parts" (page 451). Otherwise, you can use a signal cable from "2-port STM-1e prefabricated cable assemblies" (page 449).

Table 156
2-port STM-1 electrical coax cable assembly parts

Qty	Item	Description
	R0120262	Type RA700175-ohm coaxial cable (double braided + foil shielding)
2	A0877822	BT43 (SMB 75-ohm straight plug coax connector)

To make your own custom-length control cable assembly, do the following.

- Use a standard female DB9 D-sub connector at the terminal panel end and a male DB9 at the FP end.
- The male end must have a cable exit of 90 degrees.
- Ensure that pin number 1 is on the bellow part of the connector so that the cable exits from the FP to the upper side of the shelf.
- Use No. 26 AWG (0.128 mm^2) wire.
- The wire cluster must be wrapped in braided shield, and the braided shield must be properly attached to the D-sub shell (or casing). For the procedure to make a braided shield, refer to the section on making customer equipment cables in NN10600-175 *Nortel Networks Multiservice Switch 7400 Hardware Installation, Maintenance, and Upgrade*.
- Solder the wires to the DB9 connectors according to the table "Pinout of a control cable for the 2-port STM-1e FP or sparing panel" (page 452).

Table 157
Pinout of a control cable for the 2-port STM-1e FP or sparing panel

Pin	Description
1	no connection
2	no connection
3	protection request line
4	protection status line
5	ground
6	+12 volts
7	no connection
8	no connection
9	no connection
Note: Pins 3 and 6 are for the first twisted pair. Pins 4 and 5 are for the second twisted pair.	

The connectors of the signaling cables for the 2-port STM-1e FP and sparing panel are SMB BT43 (SMZ). The installation of these connectors is described in the sections on installing card cables and installing customer equipment cabling in NN10600-175 *Nortel Networks Multiservice Switch 7400 Hardware Installation, Maintenance, and Upgrade*.

Chapter 18
V.11 function processor

See the following sections for information about the 8-port V.11 function processor (FP):

- “8-port V.11 faceplate” (page 454)
- “8-port V.11 termination panels” (page 455)
- “8-port V.11 cable assembly” (page 455)
- “8-port V.11 pinouts” (page 456)

Note 1: Nortel ships V.11 FPs with all termination DIP switches set to *on*. A terminated line has a load connected to the input. An unterminated line has no load. Generally, line rates above 200 kbit/s should be terminated. For more information about when to use an unterminated line, see CCITT V.11 Recommendations, Annex A, section A2.

Note 2: If you want to run multiple services on a single FP, see your Nortel Networks representative.

8-port V.11 faceplate

Figure 144
8-port V.11 faceplate

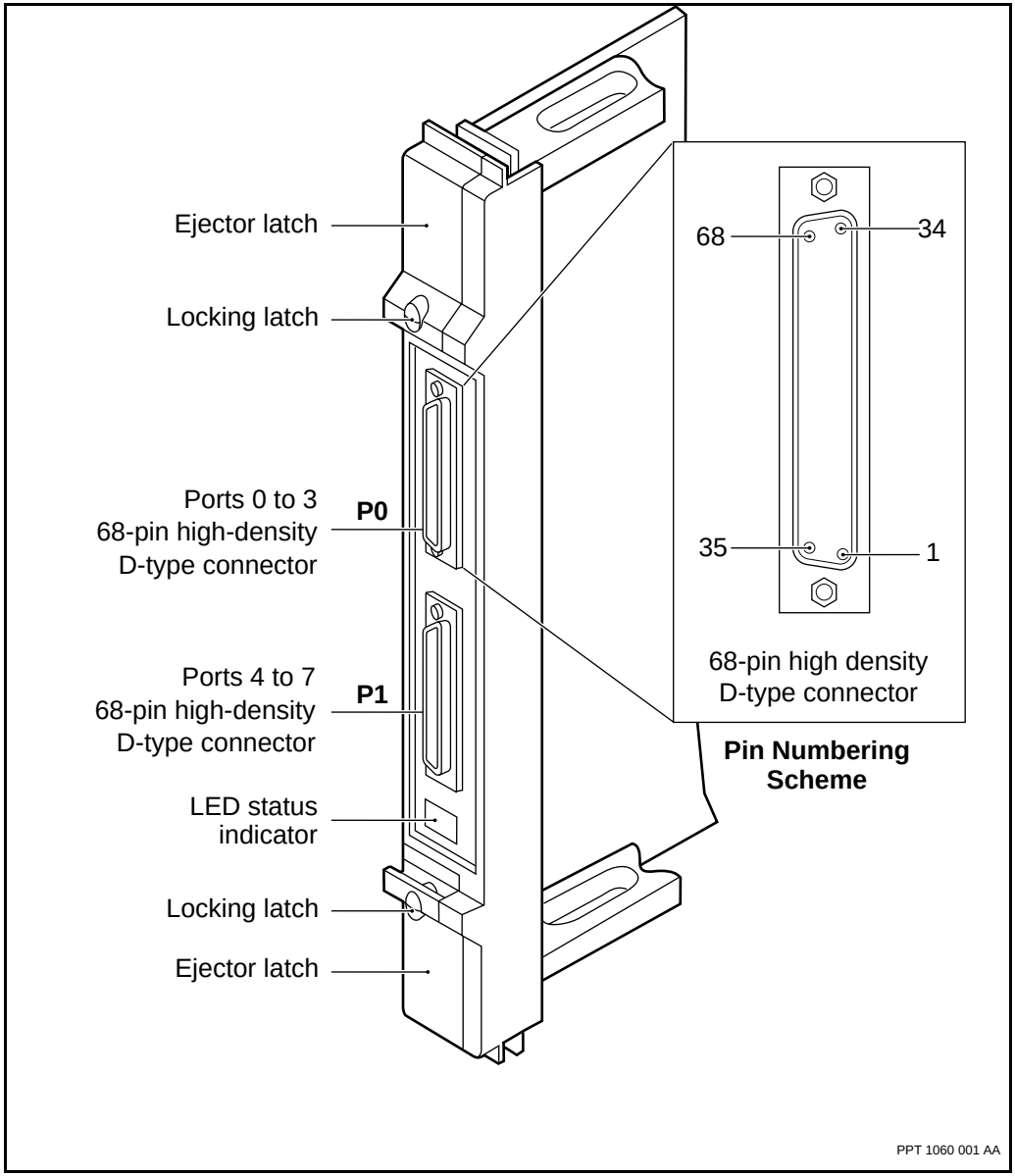

8-port V.11 termination panels

The V.11 FP uses V.11 termination panels. These panels provide a break-out for customer-equipment connections so that each V.11 port has its own termination point and access. These termination panels also determine the type of connection (DCE or DTE) depending on which connector is used. The V.11 termination panels do not support sparing.

For more information about the V.11 termination panels, see “V.11 termination panels” (page 63).

8-port V.11 cable assembly

The 8-port V.11 function processor (FP) supports the cable lengths specified in Appendix I.2 of the ITU-T Recommendation V.11. The table “Maximum V.11 cable lengths” (page 455) provides some of these cable lengths from Appendix I.2 as a quick reference.

The maximum allowable cable length from the Nortel Networks Multiservice Switch device to the external customer equipment depends on the clock speed of the V.11 line.

> ***Note:*** The maximum length always includes the length of the card cable connecting the V.11 FP to its termination panel. Therefore, the customer-equipment cable needs to be shorter than the maximum length indicated in the table.

For clock speeds up to 100 Kbit/s, the maximum V.11 cable length allowed by the ITU-T Recommendation V.11 is 1000 m (3280.84 ft.).

Table 158
Maximum V.11 cable lengths

Clock speed (Mbit/s)	Maximum cable length * (meters)
0.5	200
1	100
2	50
4	25
(Sheet 1 of 2)	

Table 158 (continued)
Maximum V.11 cable lengths

Clock speed (Mbit/s)	Maximum cable length * (meters)
6	15
8	12.5
* includes the cable that connects the FP to its termination panel	
(Sheet 2 of 2)	

Note: V.11 line termination needs to be turned ON for a V.11 port that is clocked above 200 Kbit/s.

For more information about V.11 cable assembly, see “8-port V.11 cable assembly parts” (page 456).

8-port V.11 cable assembly parts

This table lists the items you need to assemble V.11 cables.

Table 159
8-port V.11 cable assembly parts

Qty	Item	Description
5 meters (16 ft.)	Belden 8107	Shielded cable, 100-ohm, 7 twisted pairs, 24-gauge (0.51 mm) strand
2	NT A0380877	AMP 205206-3, connector housing, 15-pin D-sub, male, tin plated, with grounding indents
30	NT A0291226	AMP 66506-3 pin for above, 20- to 24-gauge (0.81 to 0.51 mm) wire
2	NT A0361050	AMP 747099-3 straight hood kit, 15-pin D-sub

For more information about cables, see “Cables” (page 89).

8-port V.11 pinouts

See these sections for information about specific connectors:

- “8-port V.11 connector P0 pinouts and signal names for ports 0 and 1” (page 457)

- “8-port V.11 connector P0 pinout and signal names for ports 2 and 3” (page 458)
- “8-port V.11 connector P1 pinout and signal names for ports 4 and 5” (page 460)
- “8-port V.11 connector P1 pinout and signal names for ports 6 and 7” (page 461)
- “8-port V.11 connector pinout and signal names for DCE-to-DTE or DTE-to-DCE connection” (page 464)

Table 160
8-port V.11 connector P0 pinouts and signal names for ports 0 and 1

Pin No.	V.11 DTE	V.11 DCE	Name
1	T0A	R0A	
35	T0B	R0B	
2	R0A	T0A	
36	R0B	T0B	
3	X0B	S0B	
37	X0A	S0A	
4	S0B	X0B	
38	S0A	X0A	
5	C0A	I0A	
39	C0B	I0B	
6	I0A	C0A	
40	I0B	C0B	
7			
41			
8			EQPTID03
42			+5V
9			SIGRET0

(Sheet 1 of 2)

Table 160 (continued)
8-port V.11 connector P0 pinouts and signal names for ports 0 and 1

Pin No.	V.11 DTE	V.11 DCE	Name
10	T1A	R1A	
44	T1B	R1B	
11	R1A	T1A	
45	R1B	T1B	
12	X1B	S1B	
46	X1A	S1A	
13	S1B	X1B	
47	S1A	X1A	
14	C1A	I1A	
48	C1B	I1B	
15	I1A	C1A	
49	I1B	C1B	
16			
50			
17			PSREG0
51			PSREG1
43			SIGRET1

(Sheet 2 of 2)

Table 161
8-port V.11 connector P0 pinout and signal names for ports 2 and 3

Pin No.	V.11 DTE	V.11 DCE	Name
18	T2A	R2A	
52	T2B	R2B	
19	R2A	T2A	

(Sheet 1 of 3)

Table 161 (continued)
8-port V.11 connector P0 pinout and signal names for ports 2 and 3

Pin No.	V.11 DTE	V.11 DCE	Name
53	R2B	T2B	
20	X2B	S2B	
54	X2A	S2A	
21	S2B	X2B	
55	S2A	X2A	
22	C2A	I2A	
56	C2B	I2B	
23	I2A	C2A	
57	I2B	C2B	
24			
58			
25			PSREG2
59			PSREG3
26			SIGRET2
27	T3A	R3A	
61	T3B	R3B	
28	R3A	T3A	
62	R3B	T3B	
29	X3B	S3B	
63	X3A	S3A	
30	S3B	X3B	
64	S3A	X3A	
31	C3A	I3A	
65	C3B	I3B	
32	I3A	C3A	
(Sheet 2 of 3)			

Table 161 (continued)
8-port V.11 connector P0 pinout and signal names for ports 2 and 3

Pin No.	V.11 DTE	V.11 DCE	Name
66	I3B	C3B	
33			
67			
34			+5V
68			+5V
60			SIGRET3
(Sheet 3 of 3)			

Table 162
8-port V.11 connector P1 pinout and signal names for ports 4 and 5

Pin No.	V.11 DTE	V.11 DCE	Name
1	T4A	R4A	
35	T4B	R4B	
2	R4A	T4A	
36	R4B	T4B	
3	X4B	S4B	
37	X4A	S4A	
4	S4B	X4B	
38	S4A	X4A	
5	C4A	I4A	
39	C4B	I4B	
6	I4A	C4A	
40	I4B	C4B	
7			
41			
8			EQPTID47
(Sheet 1 of 2)			

Table 162 (continued)
8-port V.11 connector P1 pinout and signal names for ports 4 and 5

Pin No.	V.11 DTE	V.11 DCE	Name
42			+5V
9			SIGRET4
10	T5A	R5A	
44	T5B	R5B	
11	R5A	T5A	
45	R5B	T5B	
12	X5B	S5B	
46	X5A	S5A	
13	S5B	X5B	
47	S5A	X5A	
14	C5A	I5A	
48	C5B	I5B	
15	I5A	C5A	
49	I5B	C5B	
16			
50			
17			PSLOAD
51			PSSTATUS
43			SIGRET5
(Sheet 2 of 2)			

Table 163
8-port V.11 connector P1 pinout and signal names for ports 6 and 7

Pin No.	V.11 DTE	V.11 DCE	Name
18	T6A	R6A	
52	T6B	R6B	
(Sheet 1 of 3)			

Table 163 (continued)
8-port V.11 connector P1 pinout and signal names for ports 6 and 7

Pin No.	V.11 DTE	V.11 DCE	Name
19	R6A	T6A	
53	R6B	T6B	
20	X6B	S6B	
54	X6A	S6A	
21	S6B	x6B	
55	S6A	X6A	
22	C6A	I6A	
56	C6B	I6B	
23	I6A	C6A	
57	I6B	C6B	
24			
58			
25			
59			
26			
27	T7A	R7A	
61	T7B	R7B	
28	R7A	T7A	
62	R7B	T7B	
29	X7B	S7B	
63	X7A	S7A	
30	S7B	X7B	
64	S7A	X7A	
31	C7A	I7A	
65	C7B	I7B	
(Sheet 2 of 3)			

Table 163 (continued)
8-port V.11 connector P1 pinout and signal names for ports 6 and 7

Pin No.	V.11 DTE	V.11 DCE	Name
32	I7A	C7A	
66	I7B	C7B	
33			
67			
34			
68			
60			
(Sheet 3 of 3)			

Figure 145
8-port V.11 connector pinout and signal names for DCE-to-DTE or DTE-to-DCE connection

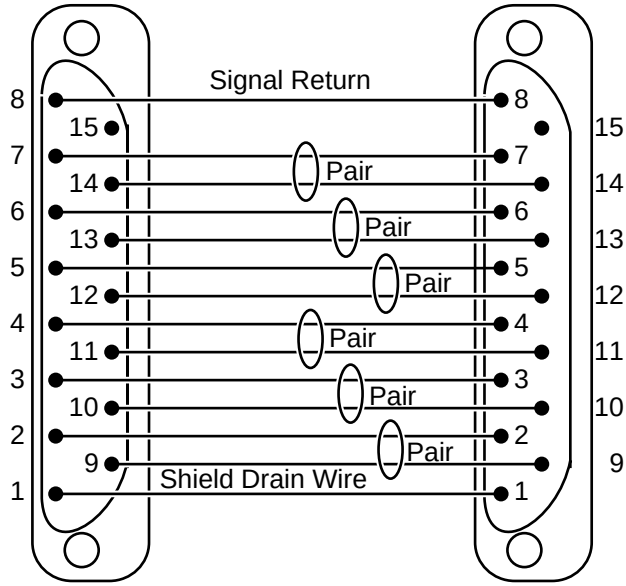

Pin	Name
1	shield drain
2	TA
3	CA
4	RA
5	IA
6	SA
7	XA
8	GND
9	TB
10	CB
11	RB
12	IB
13	SB
14	XB
15	No connections

Note 1:
The connection pairs \(circled above as Pairs\) should be connected to twisted pairs in the cables. Failure to do so may result in data errors, particularly for long cables and/or high data rates.

PPT 0873 001 AB

Chapter 19
V.35 function processor

See these sections for information about the 8-port V.35 function processor (FP):

- “8-port V.35 faceplate” (page 466)
- “8-port V.35 termination panels” (page 467)
- “8-port V.35 cable assembly” (page 467)
- “8-port V.35 pinouts” (page 468)

8-port V.35 faceplate

Figure 146
8-port V.35 faceplate

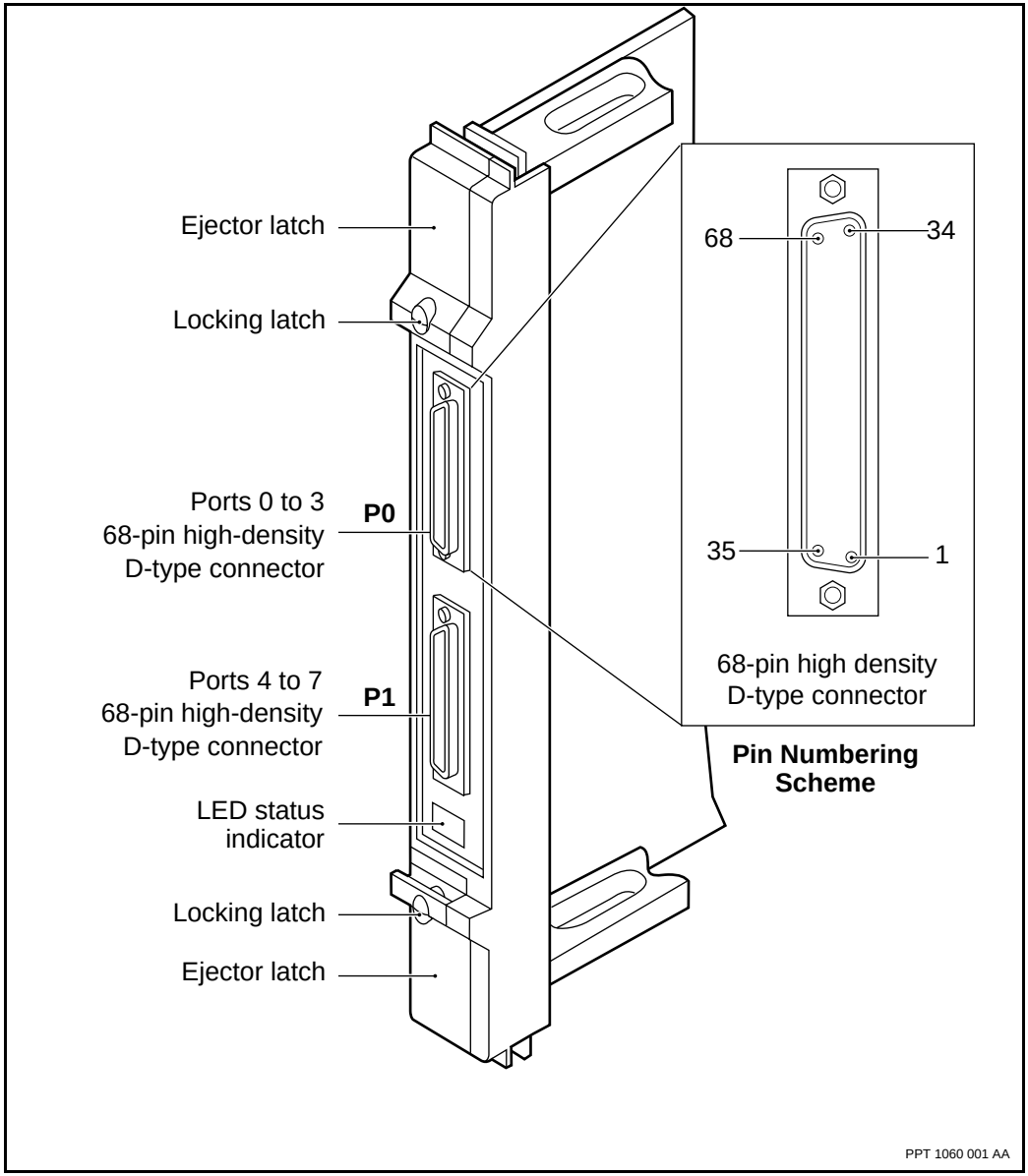

8-port V.35 termination panels

The V.35 FP uses the V.35 termination panels. The V.35 termination panels provide a break-out for customer-equipment connections so that each V.35 port has its own termination point and access. These termination panels also determine the type of connection (DCE or DTE) depending on which connector is used. The V.35 termination panels do not provide sparing.

For more information about the V.35 termination panels, see “V.35 termination panels” (page 64).

8-port V.35 cable assembly

The maximum cable length to customer equipment depends on the speed of data required. The maximum cable length is the total path from the FP to the equipment at the other end of the connection, through one or more termination panels. To prevent signal distortion, Nortel Networks recommends the following.

- For data rates up to 144 kbit/s, the maximum cable length is 90 m (292 ft).
- For data rates up to 192 kbit/s, the maximum cable length is 75 m (192 ft).
- For data rates up to 3.68 Mbit/s, the maximum cable length is 15 m (49 ft).
- For data rates above 3.68 Mbit/s and up to 4 Mbit/s, the maximum cable length is 3 m (9.8 ft).

See “8-port V.35 cable assembly parts” (page 467) for more information.

8-port V.35 cable assembly parts

This table lists the items you need to assemble V.35 cables.

Table 164
8-port V.35 cable assembly parts

Qty	Item	Description
5 m (16 ft.)	R0113716	Belden 8108 shielded cable, 100-ohm, 8 twisted pair, 24-gauge (0.51 mm) strand
1	A0380877	AMP 205206-3, connector housing, 15-pin D-sub, male, tin plated, with grounding indents
15	A029126	AMP 66506-3 pin for above, 20- to 24-gauge (0.81 to 0.51 mm) wire
1	A0361050	AMP 747099-3 straight hood kit, 15-pin D-sub
1	A0296895	AMP 201357-1 connector housing, 34-pin positions
17	A0296894	AMP 201611-1 pin for above, 20- to 24-gauge (0.81 to 0.51 mm) wire
1	A0296893	AMP 200517-2 connector hood, 34-pin positions
1	A0298542	AMP 201414-1 jackscrew female for above connector
1	A0298543	AMP 201413-1 jackscrew female for above connector
4	P0180927	0.112-40 x 0.5-in. pan-head machine screw
4	P0387666	0.115-in. spring washer

For more information about cables, see “Cables” (page 89).

8-port V.35 pinouts

See these sections for information on specific connectors:

- “8-port V.35 connector P0 pinout and signal names for ports 0 and 1” (page 469)
- “8-port V.35 connector P0 pinout and signal names for ports 2 and 3” (page 470)
- “8-port V.35 connector P1 pinout and signal names for ports 4 and 5” (page 472)
- “8-port V.35 connector P1 pinout and signal names for ports 6 and 7” (page 474)
- “8-port V.35 connector pinout and signal names for DCE-to-DTE or DTE-to-DCE connection” (page 476)

- “8-port V.35 connector pinout and signal names for crossover cable for DCE-to-DCE connection” (page 477). Make this cable when the V.35 interface originates the clock and you are connecting it to a DCE interface such as a modem. An example of this type of application is the bit transparent data service (BTDS).

Table 165
8-port V.35 connector P0 pinout and signal names for ports 0 and 1

Pin No.	V.35 DTE	V35 DCE	Name
1	TXD0A	RXD0A	
35	TXD0B	RXD0B	
2	RXD0A	TXD0A	
36	RXD0B	TXD0B	
3	TSET0B	RSET0B	
37	TSET0A	RSET0A	
4	TSETDTE0B	TSET0B	
38	TSETDTE0A	TSET0A	
5	RSET0B	TSETDTE0B	
39	RSET0A	TSETDTE0A	
6	RTS0	RFS0	
40	RFS0	RTS0	
7	DSR0	DCD0	
41	DCD0	DSR0	
8			EQPTID03
42			+5V
9			SIGRET0
10	TXD1A	RXD1A	
44	TXD1B	RXD1B	
11	RXD1A	TXD1A	

(Sheet 1 of 2)

Table 165 (continued)
8-port V.35 connector P0 pinout and signal names for ports 0 and 1

Pin No.	V.35 DTE	V35 DCE	Name
45	RXD1B	TXD1B	
12	TSET1B	RSET1B	
46	TSET1A	RSET1A	
13	TSETDTE1B	TSET1B	
47	TSETDTE1A	TSET1A	
14	RSET1B	TSETDTE1B	
48	RSET1A	TSETDTE1A	
15	RTS1	RFS1	
49	RFS1	RTS1	
16	DSR1	DCD1	
50	DCD1	DSR1	
17			PSREG0
51			PSREG1
43			SIGRET1
(Sheet 2 of 2)			

Table 166
8-port V.35 connector P0 pinout and signal names for ports 2 and 3

Pin No.	V.35 DTE	V35 DCE	Name
18	TXD2A	RXD2A	
52	TXD2B	RXD2B	
19	RXD2A	TXD2A	
53	RXD2B	TXD2B	
20	TSET2B	RSET2B	
54	TSET2A	RSET2A	
21	TSETDTE2B	TSET2B	
(Sheet 1 of 3)			

Table 166 (continued)
8-port V.35 connector P0 pinout and signal names for ports 2 and 3

Pin No.	V.35 DTE	V35 DCE	Name
55	TSETDTE2A	TSET2A	
22	RSET2B	TSETDTE2B	
56	RSET2A	TSETDTE2A	
23	RTS2	RFS2	
57	RFS2	RTS2	
24	DSR2	DCD2	
58	DCD2	DSR2	
25			PSREG2
59			PSREG3
26			SIGRET2
27	TXD3A	RXD3A	
61	TXD3B	RXD3B	
28	RXD3A	TXD3A	
62	RXD3B	TXD3B	
29	TSET3B	RSET3B	
63	TSET3A	RSET3A	
30	TSETDTE3B	TSET3B	
64	TSETDTE3A	TSET3A	
31	RSET3B	TSETDTE3B	
65	RSET3A	TSETDTE3A	
32	RTS3	RFS3	
66	RFS3	RTS3	
33	DSR3	DCD3	
67	DCD3	DSR3	
34			+5V

(Sheet 2 of 3)

Table 166 (continued)
8-port V.35 connector P0 pinout and signal names for ports 2 and 3

Pin No.	V.35 DTE	V35 DCE	Name
68			+5V
60			SIGRET3
(Sheet 3 of 3)			

Table 167
8-port V.35 connector P1 pinout and signal names for ports 4 and 5

Pin No.	V.35 DTE	V35 DCE	Name
1	TXD4A	RXD4A	
35	TXD4B	RXD4B	
2	RXD4A	TXD4A	
36	RXD4B	TXD4B	
3	TSET4B	RSET4B	
37	TSET4A	RSET4A	
4	TSETDTE4B	TSET4B	
38	TSETDTE4A	TSET4A	
5	RSET4B	TSETDTE4B	
39	RSET4A	TSETDTE4A	
6	RTS4	RFS4	
40	RFS4	RTS4	
7	DSR4	DCD4	
41	DCD4	DSR4	
8			EQPTID47
42			+5V
9			SIGRET4
10	TXD5A	RXD5A	
44	TXD5B	RXD5B	
(Sheet 1 of 2)			

Table 167 (continued)
8-port V.35 connector P1 pinout and signal names for ports 4 and 5

Pin No.	V.35 DTE	V35 DCE	Name
11	RXD5A	TXD5A	
45	RXD5B	TXD5B	
12	TSET5B	RSET5B	
46	TSET5A	RSET5A	
13	TSETDTE5B	TSET5B	
47	TSETDTE5A	TSET5A	
14	RSET5B	TSETDTE5B	
48	RSET5A	TSETDTE5A	
15	RTS5	RFS5	
49	RFS5	RTS5	
16	DSR5	DCD5	
50	DCD5	DSR5	
17			PSLOAD
51			PSSTATUS
43			SIGRET5
(Sheet 2 of 2)			

Table 168
8-port V.35 connector P1 pinout and signal names for ports 6 and 7

Pin No.	V.35 DTE	V35 DCE	Name
18	TXD6A	RXD6A	
52	TXD6B	RXD6B	
19	RXD6A	TXD6A	
53	RXD6B	TXD6B	
20	TSET6B	RSET6B	
54	TSET6A	RSET6A	
21	TSETDTE6B	TSET6B	
55	TSETDTE6A	TSET6A	
22	RSET6B	TSETDTE6B	
56	RSET6A	TSETDTE6A	
23	RTS6	RFS6	
57	RFS6	RTS6	
24	DSR6	DCD6	
58	DCD6	DSR6	
25			+5V
59			+5V
26			SIGRET6
27	TXD7A	RXD7A	
61	TXD7B	RXD7B	
28	RXD7A	TXD7A	
62	RXD7B	TXD7B	
29	TSET7B	RSET7B	
63	TSET7A	RSET7A	
30	TSETDTE7B	TSET7B	
64	TSETDTE7A	TSET7A	

(Sheet 1 of 2)

Table 168 (continued)
8-port V.35 connector P1 pinout and signal names for ports 6 and 7

Pin No.	V.35 DTE	V35 DCE	Name
31	RSET7B	TSETDTE7B	
65	RSET7A	TSETDTE7A	
32	RTS7	RFS7	
66	RFS7	RTS7	
33	DSR7	DCD7	
67	DCD7	DSR7	
34			+5V
68			+5V
60			SIGRET7

(Sheet 2 of 2)

Figure 147
8-port V.35 connector pinout and signal names for DCE-to-DTE or DTE-to-DCE connection

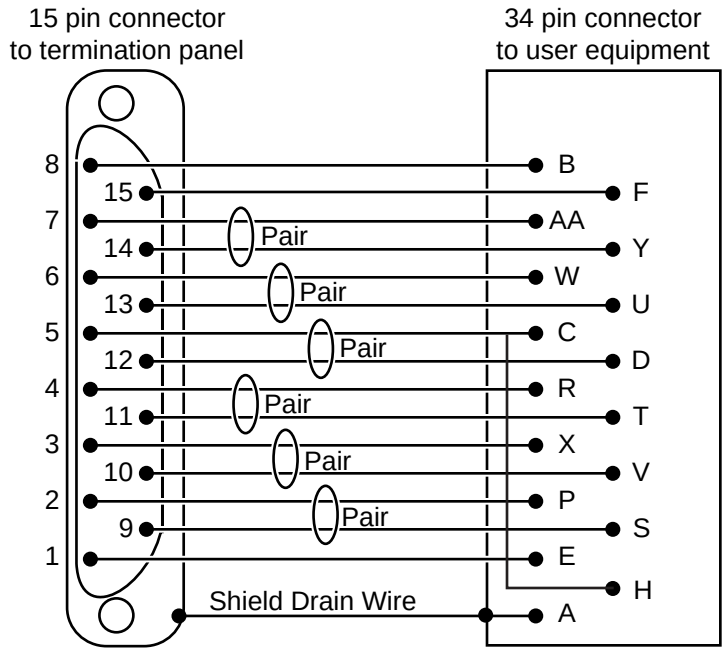

Pin	Name
1	DSR
2	TXDA
3	RSETB
4	RXDA
5	RTS
6	TSET (DTE) B
7	TSETB
8	RETURN
9	TXDB
10	RSETA
11	RXDB
12	RFS
13	TSET (DTE) A
14	TSETA
15	DCD

Note 1:
When the V.35 port is in DTE mode, the jumper between pins C (RTS) and H (DTR) is usually required. When the V.35 port is in DCE mode and the same 34 pin external cable is being used, the jumper may need to be removed. This will depend on the characteristics of the external DTE equipment.

Note 2:
The connection pairs (circled above as pairs) must be connected to twisted pairs in the cables. Failure to do so can result in data errors, particularly for long cables and/or high data rates.

PPT 0871 001 AB

Figure 148
8-port V.35 connector pinout and signal names for crossover cable for DCE-to-DCE connection

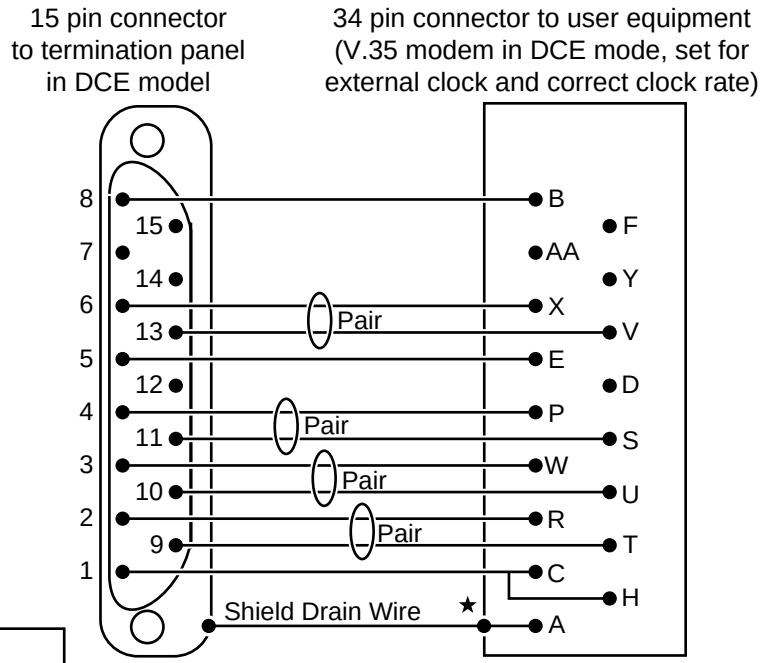

Pin	Name
1	DSR
2	TXDA
3	RSETB
4	RXDA
5	RTS
6	TSET (DTE) B
7	TSETB
8	RETURN
9	TXDB
10	RSETA
11	RXDB
12	RFS
13	TSET (DTE) A
14	TSETA
15	DCD

Note:
It is important that the connection pairs (circled above as Pairs) be connected to twisted pairs in the cables. Failure to do so may result in data errors, particularly for long cables and/or high data rates.

PPT 0872 001 AA

Chapter 20
HSSI function processor

See these sections for information about the 1-port high-speed serial interface (HSSI) function processor (FP):

- “1-port HSSI faceplate” (page 480)
- “1-port HSSI cable assembly” (page 481)
- “1-port HSSI pinouts” (page 481)

Note: The 1-port HSSI FP can be configured for DCE or DTE. The default setting for the DIP switch is DCE.

1-port HSSI faceplate

Figure 149
1-port HSSI faceplate

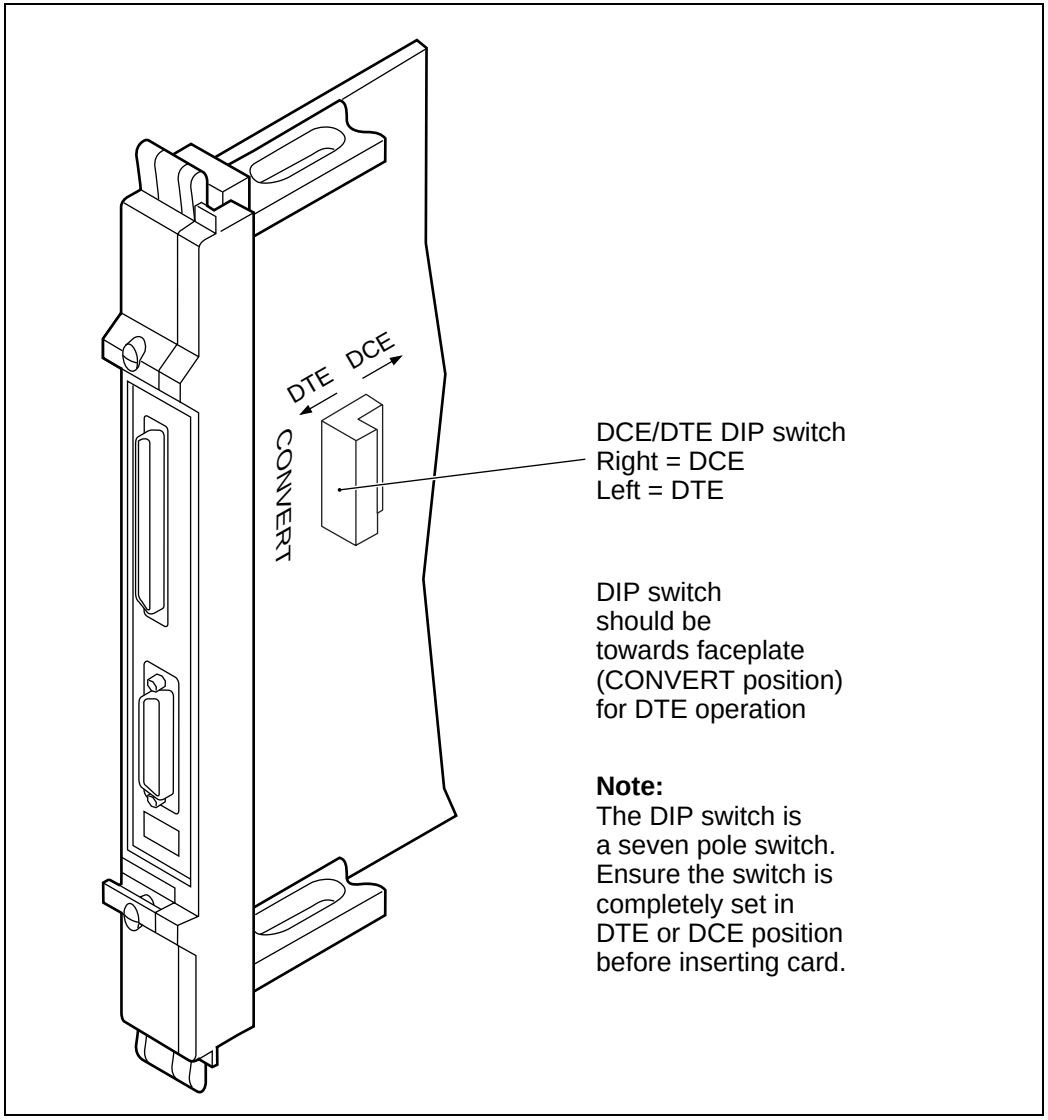

1-port HSSI cable assembly

The 1-port HSSI FP requires one cable to connect the FP to customer equipment. The type of cable required depends on whether you use the FP in DCE or DTE mode. The one-to-one DCE to DTE cable and the special null modem DTE to DCE cable are each available in 3 m (10 ft) and 15 m (50 ft) lengths. If you make your own cable, the maximum length is 15 m (50 ft).

If you set the DIP switch to DTE mode, you must use a Nortel Networks null modem cable or equivalent; otherwise, the device generates an alarm.

Table 169
1-port HSSI cable assembly parts

Qty	Item	Description
50 feet (15 m) maximum length	NT R0116875	25 pair cable Madison 50SDK00026
2	NT A0601096	AMP 749 193-2, connector hood SCSI, 2x25 array
2	NT A0378247	AMP 749621-5, connector plug 50 position, IDC .05”

For more information, see “Cables” (page 89).

1-port HSSI pinouts

See these sections for information about specific connectors. Wire colors are for cable described in “1-port HSSI cable assembly” (page 481).

- “1-port HSSI pinouts for DCE mode or DTE mode of operation” (page 482)
- “1-port HSSI pinouts for cable from DCE mode connector P0 to DTE equipment” (page 483)
- “1-port HSSI pinouts for null modem cable from DTE mode connector P0 to DCE equipment” (page 484)
- “1-port HSSI pinout locations” (page 486)

Table 170
1-port HSSI pinouts for DCE mode or DTE mode of operation

Pin number	FP in DCE mode with one-to-one cable		FP in DTE mode (Note 1) with null modem cable	
	Pinout of HSSI connector P0	**Pinout of connector at far end**	**Pinout of HSSI connector P0**	**Pinout of connector at far end**
1, 26	Ground	Ground	Ground	Ground
2, 27	RT (out)	RT (out)	TT (out)	RT (in)
3, 28	CA (out)	CA (out)	TA (out)	CA (in)
4, 29	RD (out)	RD (out)	SD (out)	RD (in)
5, 30	No connection (Note 1)	No connection	LA (out)	No connection
6, 31	ST (out)	ST (out)	Not used	ST (in)
7, 32	Ground	Ground	Ground	Ground
8, 33	TA (in)	TA (in)	CA (in)	TA (out)
9, 34	TT (in)	TT (in)	RT (in)	TT (out)
10, 35	LA (in)	LA (in)	Not used	LA (out)
11, 36	SD (in)	SD (in)	RD (in)	SD (out)
12, 37	LB (in)	LB (in)	TM (in)	LB (out)
13, 38	Ground	Ground	Ground	Ground
18, 43	No connection	No connection	Cable ID (in) (Note 3)	No connection
19, 44	Ground	Ground	Ground	Ground
20, 45	No connection	No connection	ST (in)	No connection
21, 46	No connection (Note 2)	No connection	Pins 46 to 43 (Note 2)	No connection
24, 49	TM (out)	TM (out)	LB (out)	TM (in)
(Sheet 1 of 2)				

Table 170 (continued)
1-port HSSI pinouts for DCE mode or DTE mode of operation

Pin number	FP in DCE mode with one-to-one cable		FP in DTE mode (Note 1) with null modem cable	
	Pinout of HSSI connector P0	Pinout of connector at far end	Pinout of HSSI connector P0	Pinout of connector at far end
25, 50	Ground	Ground	Ground	Ground

Note 1: All no connection pins are open wire. Pins 14, 39, 15, 40, 16, 41, 17, 42, 22, 47, 23, 48 are no connection.

Note 2: High impedance pull up voltage provided by HSSI FP for null modem cable identification on pin 46.

Note 3: For DTE, pin 46 connected to pin 43 with short jumper wire within cable connector at HSSI FP end.

(Sheet 2 of 2)

Table 171
1-port HSSI pinouts for cable from DCE mode connector P0 to DTE equipment

From	To	Color	From	To	Color
Con1-1	Con2-1	tan/white	Con1-26	Con2-26	white/tan
Con1-2	Con2-2	brown/white	Con1-27	Con2-27	white/brown
Con1-3	Con2-3	pink/white	Con1-28	Con2-28	white/pink
Con1-4	Con2-4	orange/white	Con1-29	Con2-29	white/orange
Con1-5	Con2-5	yellow/white	Con1-30	Con2-30	white/yellow
Con1-6	Con2-6	green white	Con1-31	Con2-31	white/green
Con1-7	Con2-7	blue/white	Con1-32	Con2-32	white/blue
Con1-8	Con2-8	violet/white	Con1-33	Con2-33	white/violet
Con1-9	Con2-9	gray/white	Con1-34	Con2-34	white/gray
Con1-10	Con2-10	brown/tan	Con1-35	Con2-35	tan/brown
Con1-11	Con2-11	pink/tan	Con1-36	Con2-36	tan/pink
Con1-12	Con2-12	orange/tan	Con1-37	Con2-37	tan/orange
Con1-13	Con2-13	yellow/tan	Con1-38	Con2-38	tan/yellow

(Sheet 1 of 2)

Table 171 (continued)
1-port HSSI pinouts for cable from DCE mode connector P0 to DTE equipment

From	To	Color	From	To	Color
Con1-14	Con2-14	green/tan	Con1-39	Con2-39	tan/green
Con1-15	Con2-15	blue/tan	Con1-40	Con2-40	tan/blue
Con1-16	Con2-16	violet/tan	Con1-41	Con2-41	tan/violet
Con1-17	Con2-17	gray/tan	Con1-42	Con2-42	tan/gray
Con1-18	Con2-18	pink/brown	Con1-43	Con2-43	brown/pink
Con1-19	Con2-19	orange/brown	Con1-44	Con2-44	brown/orange
Con1-20	Con2-20	yellow/brown	Con1-45	Con2-45	brown/yellow
Con1-21	Con2-21	green/brown	Con1-46	n.c.	
Con1-22	Con2-22	blue/brown	Con1-47	Con2-47	brown/blue
Con1-23	Con2-23	violet/brown	Con1-48	Con2-48	brown/violet
Con1-24	Con2-24	gray/brown	Con1-49	Con2-49	brown/gray
Con1-25	Con2-25	orange/pink	Con1-50	Con2-50	pink/orange
(Sheet 2 of 2)					

Table 172
1-port HSSI pinouts for null modem cable from DTE mode connector P0 to DCE equipment

From	To	Color	From	To	Color
Con1-1	Con2-1	tan/white	Con1-26	Con2-26	white/tan
Con1-2	Con2-9	brown/white	Con1-27	Con2-34	white/brown
Con1-3	Con2-8	pink/white	Con1-28	Con2-33	white/pink
Con1-4	Con2-11	orange/white	Con1-29	Con2-36	white/orange
Con1-5	Con2-10	yellow/white	Con1-30	Con2-35	white/yellow
Con1-6	n.c.		Con1-31	n.c.	
Con1-7	Con2-7	blue/white	Con1-32	Con2-32	white/blue
Con1-8	Con2-3	violet/white	Con1-33	Con2-28	white/violet
Con1-9	Con2-2	gray/white	Con1-34	Con2-27	white/gray
(Sheet 1 of 2)					

Table 172 (continued)
1-port HSSI pinouts for null modem cable from DTE mode connector P0 to DCE equipment

From	To	Color	From	To	Color
Con1-10	n.c.		Con1-35	n.c.	
Con1-11	Con2-4	pink/tan	Con1-36	Con2-29	tan/pink
Con1-12	Con2-24	orange/tan	Con1-37	Con2-49	tan/orange
Con1-13	Con2-13	yellow/tan	Con1-38	Con2-38	tan/yellow
Con1-14	n.c.		Con1-39	n.c.	
Con1-15	n.c.		Con1-40	n.c.	
Con1-16	n.c.		Con1-41	n.c.	
Con1-17	n.c.		Con1-42	n.c.	
Con1-18	n.c.		Con1-43	Con1-46	short wire
Con1-19	Con2-19	orange/brown	Con1-44	Con2-44	brown/orange
Con1-20	Con2-6	yellow/brown	Con1-45	Con2-31	brown/yellow
Con1-21	n.c.		Con1-46	Con1-43	short wire
Con1-22	n.c.		Con1-47	n.c.	
Con1-23	n.c.		Con1-48	n.c.	
Con1-24	Con2-12	gray/brown	Con1-49	Con2-37	brown/gray
Con1-25	Con2-25	orange/pink	Con1-50	Con2-50	pink/orange

(Sheet 2 of 2)

Figure 150
1-port HSSI pinout locations

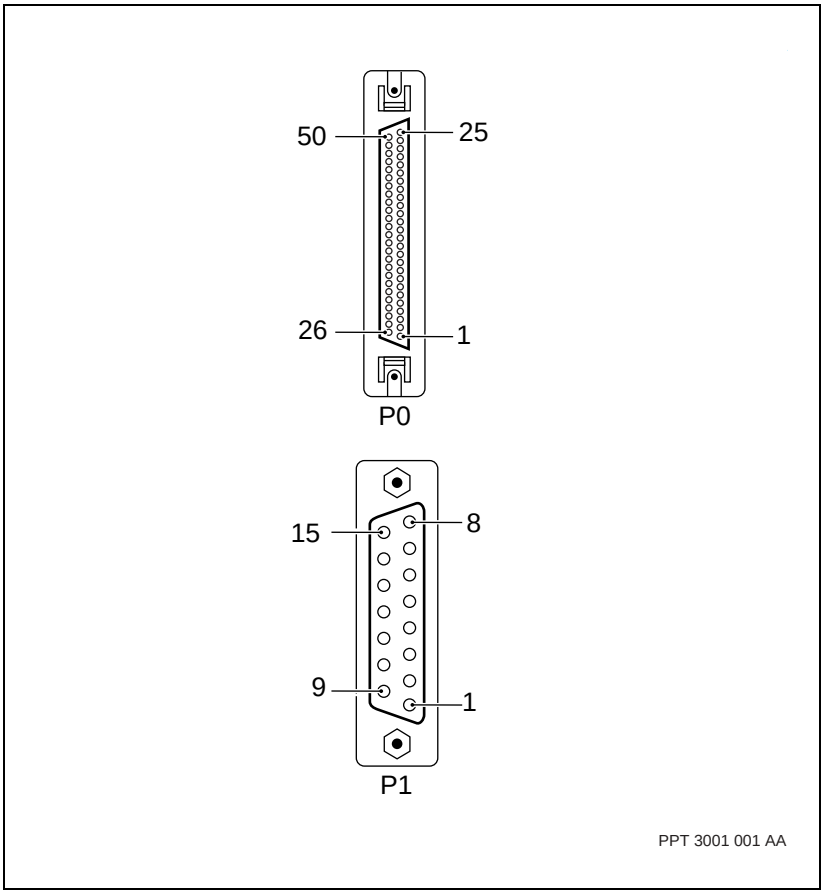

Chapter 21
JT2 ATM function processor

See these sections for information about the JT2 ATM function processor (FP):

- “2-port JT2 ATM faceplate” (page 488)
- “2-port JT2 ATM termination panels” (page 489)
- “2-port JT2 ATM cable assembly” (page 489)

2-port JT2 ATM faceplate

Figure 151
2-port JT2 ATM faceplate

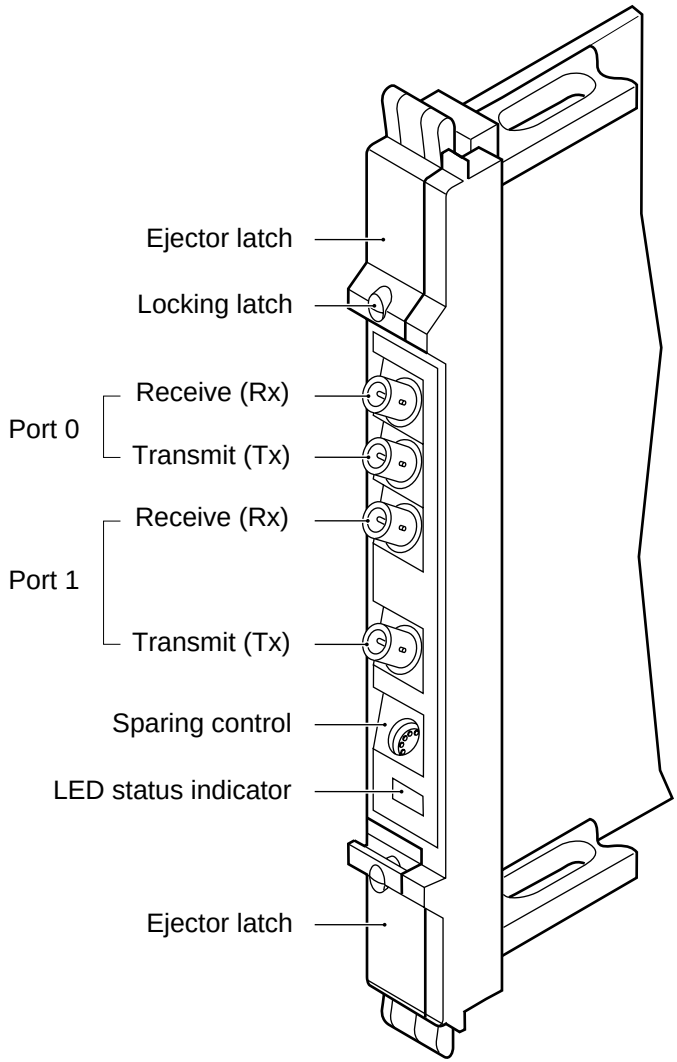

PPT 0865 001 AB

2-port JT2 ATM termination panels

The 2-port JT2 ATM FP uses the DS3/E3/JT2 ATM termination panels. You can connect customer equipment directly to the FP or to its termination panel. These termination panels support sparing.

Before setting up sparing, check the seventh and eighth digits of the PECs of the main and spare FPs. If the digits are CA, you can only spare that FP with FPs of the same or later vintage. Earlier vintages (for example, AA and BB) can be spared with each other. The PEC is located on the faceplate of the FP.

For more information about termination panels, see “DS3, E3, or JT2 ATM termination panels” (page 68).

2-port JT2 ATM cable assembly

The maximum cable length for JT2 ATM lines to customer equipment is 183 m (600 ft). The distance between the FP and the termination panel is part of the total length.

The insertion loss of a cable must not exceed 6 dB measured at 3156 kHz. For example, for NT-734 cable an insertion loss of 6 dB at 3156 kHz is about 135 m (442.9 ft.) of cable.

Table 173
2-port JT2 ATM cable assembly parts

Qty	Item	Description
2	NT-734 or comparable cable with double shielded construction	75-ohm coaxial cable
4	Amphenol 31-320	50-ohm straight BNC plug

For more information, see “Cables” (page 89).

Chapter 22
TTC2M MVP-E function processor

See the following sections for information about the TTC2M Multipurpose Voice Platform with enhanced echo cancellation (MVP-E) function processor (FP):

- “TTC2M MVP-E faceplate” (page 492)
- “TTC2M MVP-E cable assembly” (page 492)
- “TTC2M MVP-E pinouts” (page 493)

TTC2M MVP-E faceplate

Figure 152
TTC2M MVP-E faceplate

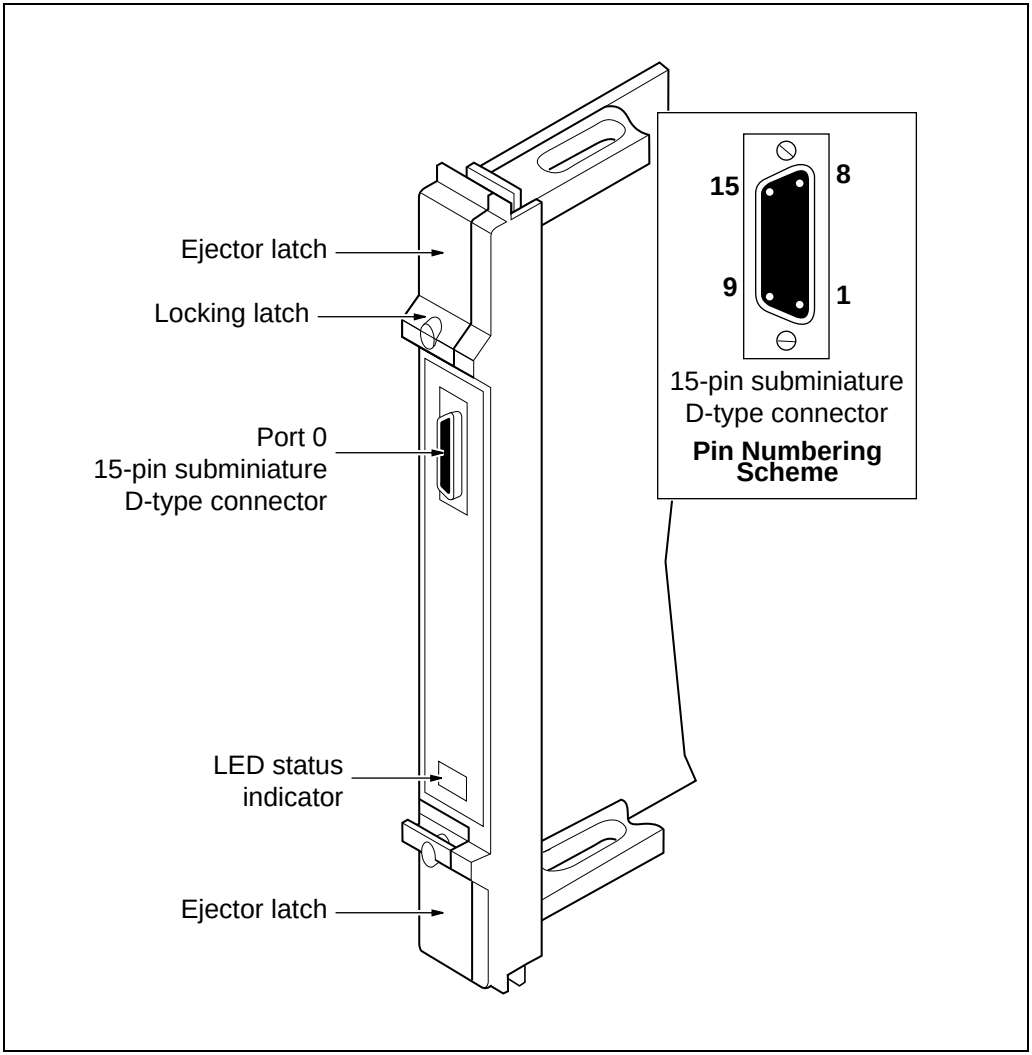

TTC2M MVP-E cable assembly

The maximum cable length for TTC2M MVP-E lines to customer equipment is 183 m (600 ft). This table gives details of the parts needed for cables.

Table 174
TTC2M MVP-E cable assembly parts

Qty	Item	Description
		cable, 0.4 ø multipair, shielded, twisted-pair
2	NT A0380877	AMP 205206-3, connector housing, 15-pin D-sub, male, tin plated, with grounding indents
10	NT A0279330	AMP 66507-9 pin for above, 24- to 28-gauge wire
2	NT A0361050	AMP 747099-3 straight hood kit, 15-pin D-sub
4	NT P0180927	0.112-40 x 0.5 in. pan-head machine screw
4	NT P0387666	0.115 in. spring washer

Table 175
TTC2M MVP-E cable assembly parts

Qty	Item	Description
		cable, 0.4 ø multipair, shielded, twisted-pair
2	NT A0380877	AMP 205206-3, connector housing, 15-pin D-sub, male, tin plated, with grounding indents
10	NT A0279330	AMP 66507-9 pin for above, 24- to 28-gauge wire
2	NT A0361050	AMP 747099-3 straight hood kit, 15-pin D-sub
4	NT P0180927	0.112-40 x 0.5 in. pan head machine screw
4	NT P0387666	0.115 in. spring washer

For more information, see “Cables” (page 89).

TTC2M MVP-E pinouts

This table identifies the pinouts and signal names for connector P0.

Table 176
TTC2M MVP-E connector P0 pinout and signal names

Pin number	Signal name	Signal direction
2	Receive +	from PBX to Multiservice Switch device
4	Transmit +	to PBX from Multiservice Switch device
9	Receive -	from PBX to Multiservice Switch device
11	Transmit -	to PBX from Multiservice Switch device
1	Ground	

Chapter 23
ILS Forwarder function processor

See these sections for information about the ILS Forwarder function processor (FP):

- “ILS Forwarder features” (page 495)
- “ILS Forwarder faceplate” (page 496)
- “ILS Forwarder sparing” (page 496)

ILS Forwarder features

The ILS Forwarder function processor (FP)

- does not require external cabling, and therefore has no ports on the faceplate
- supports ATM applications for IP such as ATM Multiprotocol Encapsulation (ATM MPE). The ILS Forwarder FP is a Nortel Networks proprietary FP and increases the performance of IP services over ATM.
- provides important information for the proper operation of ATM MPE service. The ILS Forwarder FP provides its state; it is either enabled or disabled. (If the *ilsForwarder* component is locked, the ILS Forwarder FP is disabled; otherwise, it is enabled.)
- supports the following states: When the ILS Forwarder FP is enabled, the service forwarding code on the ATM FP can forward packets to the ILS Forwarder FP. When the ILS Forwarder FP is disabled, the ATM FP does not forward packets to the ILS Forwarder FP.

For a list of the services and applications this FP supports, see your NN10600-551 *Nortel Networks Multiservice Switch 7400/15000/20000 FP Configuration Reference* representative.

For more information about FPs, see “Processor cards” (page 47).

ILS Forwarder faceplate

“ILS Forwarder faceplate” (page 497) shows the faceplate for the ILS Forwarder FP. A LED shows the operational status of the FP.

ILS Forwarder sparing

A standby ILS Forwarder FP option supports one-for-one sparing. All traffic goes through the active FP. The standby FP is idle but ready to assume traffic should the active FP fail. This FP requires no cabling, therefore, you must provision sparing. For more information, see NN10600-550 *Nortel Networks Multiservice Switch 7400/15000/20000 Common Configuration Procedures*.

Figure 153
ILS Forwarder faceplate

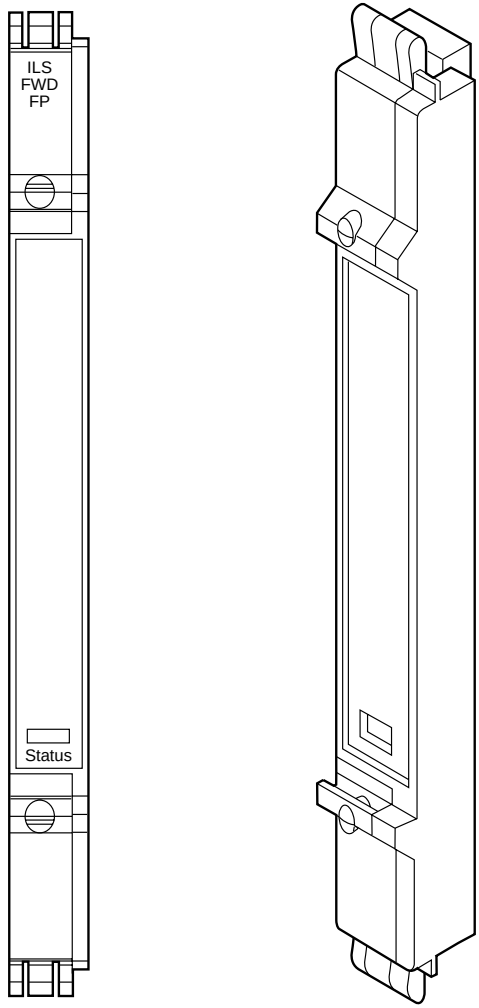

PPT 1090 001 AA

Chapter 24
VPN extender card

See these sections for more information on the VPN extender card:

- “VPN extender card features” (page 499)
- “VpnXc components” (page 501)
- “VpnXc faceplate” (page 500)
- “VpnXc configuration” (page 501)
- “VpnXc sparing” (page 501)

VPN extender card features

The VPN extender card (VpnXc) is a processor card for IP services. IP services use the VpnXc to provide enhanced IP-VPN scalability without impacting the performance of Nortel Networks Multiservice Switch 7400 devices. The VPN extender card is used to host all the virtual routers (VRs) that support IP-VPN services. The VPN extender card allows IP-VPN services to scale well beyond the capabilities of a control processor (CP) only scenario.

The product engineering code (PEC) of the VPN extender card for Multiservice Switch 7400 is NTNQ80.

VpnXc faceplate

Figure 154
Faceplate of a VPN extender card

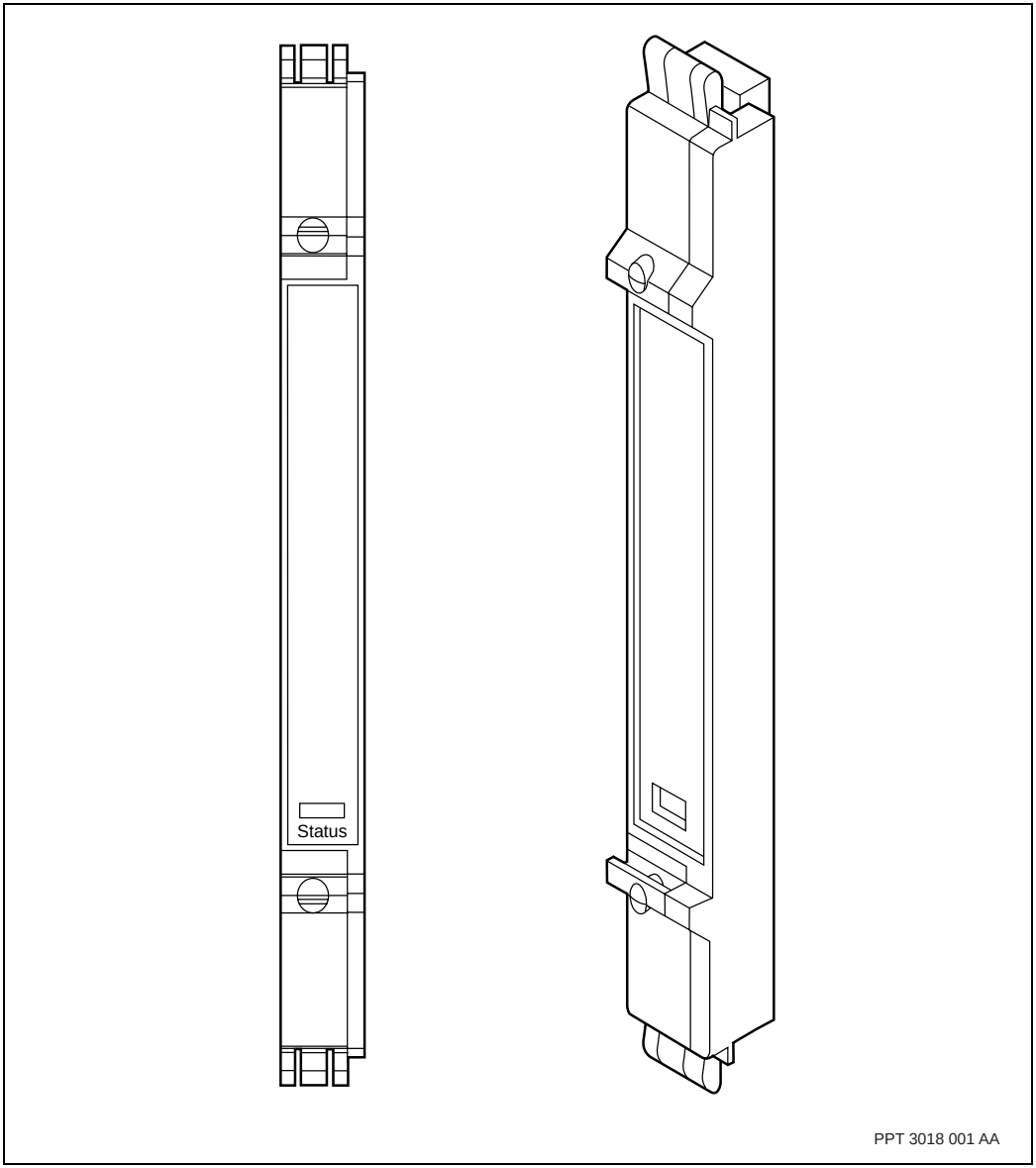

VpnXc components

The VPN extender card consists of a motherboard and a packet data accelerator (PDA) daughter card.

> ***Note:*** The (PDA) on the VpnXc is for future use and is not supported.

The VpnXc connects to the shelf backplane.

The VpnXc interface supports these functions

- 8 Mbyte FLASH memory
- 256 Mbyte SDRAM memory

VpnXc configuration

The VPN extender card has no external connections or ports that require configuration. The card type value <cardtype> is *VpnExtender* or *VpnXc* for the VPN extender card. For more information on configuring Nortel Networks Multiservice Switch 7400 FPs, see NN10600-551 *Nortel Networks Multiservice Switch 7400/15000/20000 FP Configuration Reference*.

VpnXc sparing

The VPN extender card supports equipment protection with one-for-one sparing. This FP requires no cabling, therefore, you must provision sparing. The redundant pair of VPN extender cards do not need to be installed in adjacent slots.

For more information, see NN10600-550 *Nortel Networks Multiservice Switch 7400/15000/20000 Common Configuration Procedures*.

Chapter 25
Voice services function processors

Media Gateway services are supported on the following Nortel Networks Multiservice Switch VSP function processors (FPs):

- “VSP function processor” (page 503)
- “VSP2 function processor” (page 505)

VSP function processor

See these sections for information about the voice services function processor (FP):

- “Voice services faceplate” (page 504)

The VSP has no cable connections on its faceplate.

Voice services faceplate

Figure 155
Faceplate of a VSP

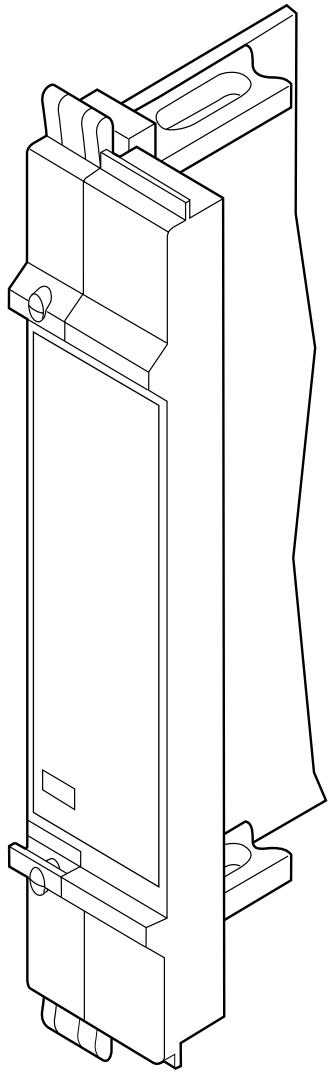

VSP2 function processor

See these sections for information about the voice services function processor 2 (VSP2):

- “Voice services faceplate” (page 504)

The VSP has no cable connections on its faceplate.

VSP2 faceplate

Figure 156
Faceplate of a VSP2

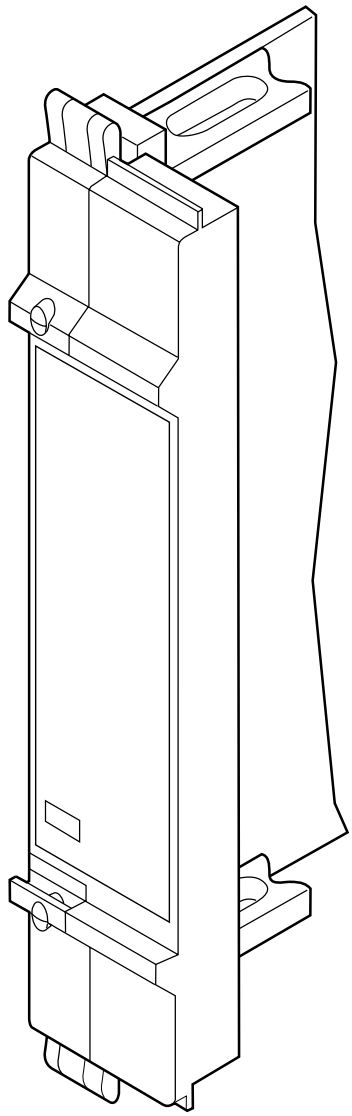

Chapter 26
Wireless packet data server

See these sections for information about the wireless packet data server (WPDS):

- “WPDS features” (page 507)
- “WPDS faceplate” (page 509)
- “WPDS sparing” (page 510)
- “WPDS configuration” (page 510)

WPDS features

The wireless packet data server

- has product engineering code (PEC) NTNQ64
- does not require external cabling, and therefore has no ports on the faceplate
- supports wireless applications. The WPDS is a Nortel Networks proprietary FP and increases the performance of wireless services.
- provides its state; it is either enabled or disabled. (If the *wpds* component is locked, the WPDS is disabled; otherwise, it is enabled.)
- provides data encryption and authentication.

The WPDS has no cable connections on its faceplate.

For a list of the services this function processor (FP) supports, see NN10600-551 *Nortel Networks Multiservice Switch 7400/15000/20000 FP Configuration Reference*. For more information about FPs, see “Processor cards” (page 47).

WPDS faceplate

Figure 157
WPDS faceplate

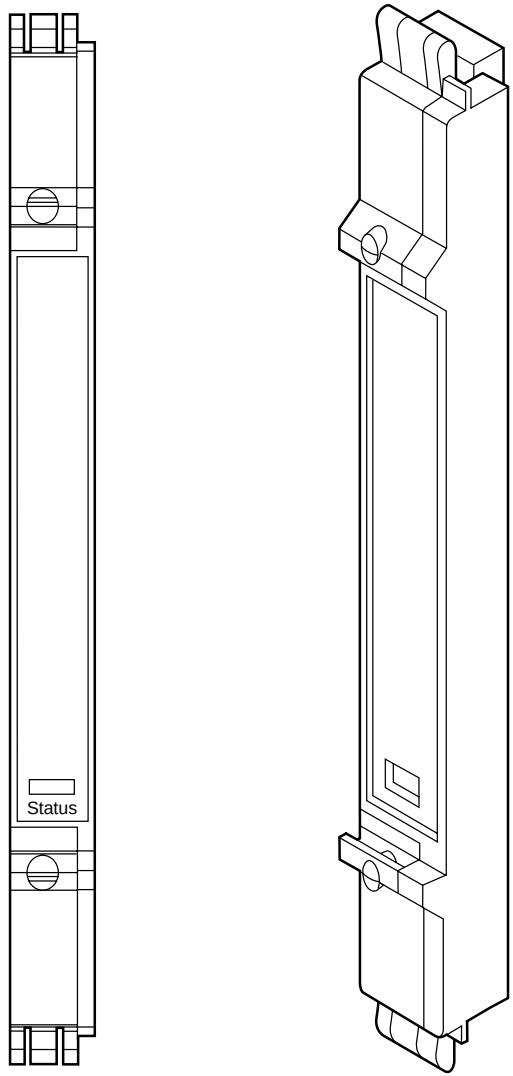

WPDS configuration

The WPDS has no external connections or ports that require configuration. The card type value <cardtype> is *wpds* for the wireless packet data server. For more information on configuring Nortel Networks Multiservice Switch 7400 FPs, see NN10600-550 *Nortel Networks Multiservice Switch 7400/15000/20000 Common Configuration Procedures*.

WPDS sparing

A standby WPDS option supports one-for-one sparing. All traffic goes through the active FP. The standby FP is idle but ready to assume traffic should the active FP fail. This FP requires no cabling, therefore, you must provision sparing. For more information, see NN10600-550 *Nortel Networks Multiservice Switch 7400/15000/20000 Common Configuration Procedures*.

Appendix
Multiservice Switch part numbers

The following tables contain the part numbers for Nortel Networks Multiservice Switch 7400 items:

- “Multiservice Switch 7480 part numbers” (page 512)
- “Multiservice Switch 7460 part numbers sorted by order code” (page 512)
- “Multiservice Switch 7440 part numbers” (page 513)
- “Multiservice Switch 7420 part numbers” (page 514)
- “Multiservice Switch cabinet and seismic cabinet part numbers” (page 514)
- “Multiservice Switch power cord part numbers” (page 515)
- “Multiservice Switch processor card part numbers sorted by order code” (page 515)

Note: The difference between the next generation and premium next generation function processors (FPs) is their capacity for connections. The premium is the 32 MB version of the standard 16 MB card.

- “Multiservice Switch termination panel part numbers” (page 518)
- “Multiservice Switch cable part numbers sorted by interface type” (page 520)
- “Multiservice Switch miscellaneous items part numbers” (page 523)

Table 177
Multiservice Switch 7480 part numbers

Description	Order code
Multiservice Switch 7480 ac shelf	NTJS62
Multiservice Switch 7480 dc shelf	NTJS63
Multiservice Switch 7480 cable management unit	NTJS59
Multiservice Switch 7480 ac power supply	NTBP09
Multiservice Switch 7480 dc power supply	NTBP52
Multiservice Switch 7480 blank power supply faceplate	NTBP51
Multiservice Switch 7480 cooling unit drawer	NTBP0701
Multiservice Switch 7480 external alarm board	NTBP69
Multiservice Switch 7480 cooling unit	NTBP07AA
Multiservice Switch 7480 cable management unit	NTBP08
Multiservice Switch 7480 air filter	NTBP0702
Multiservice Switch 7480 air filter pad	A0383866
door/rack-mount alarm cable	NTBP42
rack-mount alarm panel assembly	NTJS74AA
shelf alarm interconnect cable	NTBP73

Table 178
Multiservice Switch 7460 part numbers sorted by order code

Description	Order Code
Multiservice Switch 7460 shelf assembly	NTEP80
Multiservice Switch 7460 cooling unit	NTEP8023
Multiservice Switch 7460 air filter pad	P0609614
Multiservice Switch 7460 dc power supply	NTPS19
Multiservice Switch 7460 cable management bracket	NTPS21

(Sheet 1 of 2)

Table 178 (continued)
Multiservice Switch 7460 part numbers sorted by order code

Description	Order Code
Multiservice Switch 7460 power supply blank	NTPS22
Multiservice Switch 7460 alarm panel kit	NTPS20AA
Multiservice Switch 7460 power and alarm panel kit	NTPS20BA
(Sheet 2 of 2)	

Table 179
Multiservice Switch 7440 part numbers

Description	Order code
Multiservice Switch 7440 shelf	NTWP66
Multiservice Switch 7440 front/rear cover kit	NTEP65
Multiservice Switch 7440 ac power supply	NTEP26
Multiservice Switch 7440 dc power supply	NTEP27
Multiservice Switch 7440 blank power supply faceplate	NTEP41
Multiservice Switch 7440 stand-alone mounting kit	NTEP40
Multiservice Switch 7440 rack mounting kit	NTEP17
Multiservice Switch 7440 cooling unit door assembly	NTEP13
Multiservice Switch 7440 cooling unit assembly (for shelves NTEP39GA or NTEP63)	NTEP14BA
Multiservice Switch 7440 cooling unit assembly (for shelves NTEP39, versions AA to FA)	NTEP14AA
Multiservice Switch 7440 air filter replacement pad	A0626924
Multiservice Switch 7440 front/rear cover kit	NTEP65
Multiservice Switch 7440 ac power supply	NTEP26

Table 180
Multiservice Switch 7420 part numbers

Description	Order code
Multiservice Switch 7420 shelf	NTHQ19
Multiservice Switch 7420 standalone (desk-mount) kit	NTHQ05
Multiservice Switch 7420 rack mount kit	NTHQ04
Multiservice Switch 7420 seismic rack mount kit	NTHQ20
Multiservice Switch 7420 vertical mount kit	NTHQ08
Multiservice Switch 7420 rear-mount termination panel kit	NTHQ09
Multiservice Switch 7420 cable management kit	NTHQ10

Table 181
Multiservice Switch cabinet and seismic cabinet part numbers

Description	Order code
Multiservice Switch cabinet with side panels	NTBP85
Multiservice Switch cabinet with doors and side panels	NTJS52
Multiservice Switch cabinet side panel kit	NTBP04
Multiservice Switch cabinet door kit	NTJS56
Multiservice Switch cabinet anchoring kit	QMY709A
Seismic shelf mounting collar kit	NTFN38
Seismic cabinet mounting rail kit	NTFN36
Seismic cabinet anchoring kit (outside mount)	NTFN37
Seismic cabinet anchoring kit (inside mount)	NTFN98
Seismic cabinet	NTJS53

Table 182
Multiservice Switch power cord part numbers

Description	Order code
Brazil, Canada, Costa Rica, Curacao (also NTFP86), Dominican Republic, Jamaica, Korea, Mexico, Saudi Arabia, Taiwan, Thailand, United States, Venezuela	NTFP83
Japan (2.4 m)	NTFP84
Hong Kong, Mauritius, Oman, United Kingdom (13 A fuse)	NTFP85
Austria, Belgium, Curacao (also NTFP83), Czech Republic, Slovak Republic, United Arab Emirates, Finland, France, Germany, Indonesia, Morocco, Netherlands, Norway, Portugal, Russia, Spain, Sweden, Turkey	NTFP86
Argentina, Australia, China, New Zealand	NTFP87
Switzerland	NTFP88
Denmark	NTEP56
Italy	NTEP57
India	NTEP58
Israel	NTEP59

Table 183
Multiservice Switch processor card part numbers sorted by order code

Description	Order code
32-port E1 AAL	NT0461
32-port E1 TDM to ATM	NT0464
VSP AAL1	NTFN87
2-port DS3C TDM	NTFN91
2-port DS3 TDM to ATM	NTFN93
Control processor	NTNQ01
Control processor with BITS	NTNQ03
(Sheet 1 of 4)	

Table 183 (continued)
Multiservice Switch processor card part numbers sorted by order code

Description	Order code
V.35 (next generation)	NTNQ10
V.35 (premium next generation)	NTNQ11
V.11 (next generation)	NTNQ12
V.11 (premium next generation)	NTNQ13
4-port DS1 (next generation)	NTNQ14
4-port E1 (next generation)	NTNQ15
8-port DS1 (next generation)	NTNQ16
DS1C (next generation)	NTNQ17
DS1C (premium next generation)	NTNQ18
DS1C (64 Mbyte)	NTNQ19
E1C (next generation)	NTNQ20
E1C (premium next generation)	NTNQ21
E1C (64 Mbyte)	NTNQ22
DS3 (next generation)	NTNQ23
DS3 (premium next generation)	NTNQ24
E3 (next generation)	NTNQ25
DS3C	NTNQ26
HSSI (next generation)	NTNQ27
6-port Ethernet 10BaseT (next generation)	NTNQ36
2-port Ethernet 100BaseT	NTNQ37
ILS Forwarder	NTNQ38
3-port DS1 ATM	NTNQ45
3-port E1 ATM	NTNQ46
DS1 AAL1	NTNQ47
E1 AAL1	NTNQ48
(Sheet 2 of 4)	

Table 183 (continued)
Multiservice Switch processor card part numbers sorted by order code

Description	Order code
8-port DS1 ATM	NTNQ49
8-port E1 ATM	NTNQ50
DS3 ATM	NTNQ51
E3 ATM	NTNQ52
JT2 ATM	NTNQ53
OC-3 ATM (multimode)	NTNQ54
OC-3 ATM (single-mode)	NTNQ55
Wireless packet data server	NTNQ64
2-port OC3 ATM IP multimode	NTNQ65
2-port OC3 ATM IP single-mode	NTNQ66
3-port E3 ATM single-mode	NTNQ67
3-port DS3 ATM single-mode	NTNQ68
32-port E1MSA 2-slot	NTNQ69
32-port E1 MSA 2-slot with 2-port (protected) OC-3/STM-1 multimode	NTNQ71
32-port E1 MSA 2-slot with 2-port (protected) OC-3/STM-1 single-mode	NTNQ73
32-port DS1 MSA 2-slot	NTNQ74
32-port DS1 MSA 2-slot with 2-port (protected) OC-3/STM-1 multimode	NTNQ76
32-port DS1 MSA 2-slot with 2-port (protected) OC-3/STM-1 single-mode	NTNQ78
VPN extender card	NTNQ80
1-port DS1 MVP Enhanced	NTNQ85
1-port E1 MVP Enhanced	NTNQ86
1-port TTC2M MVP Enhanced	NTNQ87
(Sheet 3 of 4)	

Table 183 (continued)
Multiservice Switch processor card part numbers sorted by order code

Description	Order code
4-port E1 MVP Enhanced (MVP-E)	NTNQ88
4-port DS1 MVP Enhanced (MVP-E)	NTNQ89
2-port STM-1 electrical ATM IP	NTNQ90
2-port STM-1 electrical channelized CES/ATM/IMA	NTNQ91
8-port 10/100BaseT Ethernet	NTNQ92
32-port E1 MSA 1-slot with the version of framer for pre-PCR 6.1	NTNQ93AA
32-port E1 MSA 1-slot with the version of framer for PCR 6.1 and later	NTNQ93BA
32-port DS1 MSA 1-slot with the version of framer for pre-PCR 6.1	NTNQ94AA
32-port DS1 MSA 1-slot with the version of framer for PCR 6.1 and later	NTNQ94BA
4-port 10/100BaseT Ethernet	NTNQ95
Voice services processor 2 (VSP2)	NTSY91
(Sheet 4 of 4)	

Table 184
Multiservice Switch termination panel part numbers

Description	Order code
19” DS1 or E1 balanced BITS termination panel	NTPS13AB
19” E1 unbalanced BITS termination panel	NTPS13BB
19” V.35 termination panel (1 unit high)	NTFP08
19” V.11 termination panel (1 unit high)	NTFP09
19” DS1 or E1 balanced termination panel (1 unit high)	NTFP10
19” E1 unbalanced termination panel (1 unit high)	NTFP11
(Sheet 1 of 2)	

Table 184 (continued)
Multiservice Switch termination panel part numbers

Description	Order code
19” DS3 or E3 termination panel (1 unit high)	NTBP99
19” DS3, E3, or JT2 ATM termination panel (2 units high)	NTFP99
19” DS1 or E1 MSA32 1-port/DB15 termination panel	NTY197
19” DS1 or E1 MSA32 2-port/DB15 termination panel	NTY195
19” DS1 or E1 MSA32 RJ-45 termination panel	NTJS95
19” E1 MSA32 unbalanced BNC termination panel	NTY196
19” Ethernet termination panel	NTFP23
19” STM-1 electrical 2-port one-for-one sparing panel	NTPS92AA
13” DS1 or E1 balanced BITS termination panel	NTPS13AA
13” E1 unbalanced BITS termination panel	NTPS13BA
13” V.35 termination panel	NTEP21
13” V.11 termination panel	NTEP22
13” DS1 or E1 balanced termination panel	NTEP23
13” E1 unbalanced termination panel	NTEP24
13” DS3 or E3 termination panel	NTEP37
13” DS3, E3, or JT2 ATM termination panel	NTEP53
13” Ethernet termination panel	NTEP42
13” termination panel	NTEP46
multiport aggregate device (dc powered)	NT0486AA
multiport aggregate device (ac powered)	NT0420AA
(Sheet 2 of 2)	

Table 185
Multiservice Switch cable part numbers sorted by interface type

Description	Order Code
DCE V.24 operator cable (Note: This cable is not to be used for connecting a modem.)	NTBP25AA
BITS termination panel cable (81.3cm or 32 in) use with 13” termination panels	NTPS18AA
BITS termination panel cable (3m or 9.8 ft) use with 19” rack-mounted termination panels	NTPS18BA
V.11 to V.35 termination panel cable (3 m or 9.8 ft)	NTBP29DA
V.11 to V.35 termination panel cable (3 m or 9.8 ft)	NTBP29DB
V.11 to V.35 termination panel cable (15 m or 49.2 ft)	NTBP29DC
V.11 to V.35 13” termination panel cable (use with NTEP21)	NTEP03CA
DS1 or E1 MSA32 BNC or DB15 sparing panel inter-panel flexi-cable	NTY199AA
DS1 or E1 MSA32 BNC or DB15 sparing panel inter-panel flexi-cable, shorter version; also compatible with cable cover NTPS07	NTY199AB
DS1 or E1 MSA32 RJ-45 sparing panel inter-panel flexi-cable	NTJS99AB
DS1 MSA32 sparing panel cable (3 m or 9.8 ft)	NTPS03AA
DS1 MSA32 sparing panel cable (15 m or 49.2 ft)	NTPS04AA
DS1 termination panel cable (3 m or 9.8 ft)	NTBP27AA
DS1 termination panel cable (15 m or 49.2 ft)	NTBP27AB
DS1 or E1 termination panel cable (1 m or 3.3 ft)	NTEP02BA
DS1 13” termination panel cable (81.28 cm or 32 in.)	NTEP01AA
8-port DS1 termination panel cable (3 m or 9.8 ft)	NTFP69AA
8-port DS1 termination panel cable (15 m or 49.2 ft)	NTFP69AB
8-port DS1 termination panel cable (76.2 cm or 30 in.)	NTFP70AA
8-port DS1 termination panel cable (91.44 cm or 36 in.)	NTFP70AB
E1 MSA32 sparing panel cable (3 m or 9.8 ft)	NTPS01
(Sheet 1 of 4)	

Table 185 (continued)
Multiservice Switch cable part numbers sorted by interface type

Description	Order Code
E1 MSA32 sparing panel cable (15 m or 49.2 ft)	NTPS02
E1 termination panel cable (3 m or 9.8 ft)	NTBP28AA
E1 termination panel cable (15 m or 49.2 ft)	NTBP28AB
E1 13” termination panel cable (81.28 cm or 32 in.)	NTEP02AA
E1 or DS1 MSA32 fanout cable for 1-slot FPs (3 m or 9.8 ft)	NTPS32AA
E1 or DS1 MSA32 fanout cable for 1-slot FPs (15 m or 49.2 ft)	NTPS33AA
E1 or DS1 MSA32 fanout cable with sliding latch for 1-slot FPs (3 m or 9.8 ft)	NTPS36AA
E1 or DS1 MSA32 fanout cable with sliding latch for 1-slot FPs (15 m or 49.2 ft)	NTPS37AA
E1 or DS1 MSA32 fanout cable adapter for 1-slot FPs (1 m or 3.3 ft)	NTPS39AA
DS3 or E3 termination panel cable (3 m or 9.8 ft)	NTFP19AA
DS3 or E3 termination panel cable (15 m or 49.2 ft)	NTFP19AB
DS3 or E3 termination panel cable (1 m or 3.3 ft)	NTFP19AC
DS3, E3, or JT2 termination panel cable (3 m or 9.8 ft)	NTFP19AD
DS3, E3, or JT2 termination panel cable (15 m or 49.2 ft)	NTFP19AE
DS3, E3, or JT2 termination panel cable (1 m or 3.3 ft)	NTFP19AF
DS3, E3, or JT2 ATM control cable (3 m or 9.8 ft)	NTFP52AB
DS3, E3, or JT2 ATM control cable (15 m or 49.2 ft)	NTFP52AC
DS3, E3, or JT2 ATM control cable (1 m or 3.3 ft)	NTFP52AA
HSSI null modem cable for DTE (3 m or 9.8 ft)	NTFP94AA
HSSI null modem cable for DTE (15 m or 49.2 ft)	NTFP95AA
HSSI one-to-one cable for DCE (3 m or 9.8 ft)	NTFP96AA
HSSI one-to-one cable for DCE (15 m or 49.2 ft)	NTFP97AA
(Sheet 2 of 4)	

Table 185 (continued)
Multiservice Switch cable part numbers sorted by interface type

Description	Order Code
E1 ATM termination panel cable (3 m or 9.8 ft)	NTHP02AA
E1 ATM termination panel cable (15 m or 49.2 ft)	NTHP03AA
E1 ATM termination panel cable (78.74 cm or 31 in.)	NTHP04AA
E1 ATM termination panel cable (86.36 cm or 34 in.)	NTHP05AA
E1 ATM termination panel cable, Class B (3 m or 9.8 ft)	NTPS09AC
E1 ATM termination panel cable (15 m or 49.2 ft) Class B	NTPS09AD
E1 ATM termination panel cable (78.74 cm or 31 in.) Class B	NTPS09AA
E1 ATM termination panel cable (86.36 cm or 34 in.) Class B	NTPS09AB
DS3 or E3 control cable (3 m or 9.8 ft)	NTFP20AA
DS3 or E3 control cable (15 m or 49.2 ft)	NTFP20AB
DS3 or E3 control cable (0.8 m or 2.62 ft)	NTFP20AC
DS3 or E3 control cable (3 m or 9.8 ft), Class B	NTPS08AB
DS3 or E3 control cable (15 m or 49.2 ft), Class B	NTPS08AC
DS3 or E3 control cable (0.8 m or 2.62 ft) Class B	NTPS08AA
Ethernet cable for a Multiservice Switch 7440	NTFN02AB
Ethernet cable for an Multiservice Switch 7460 or a Multiservice Switch 7480 (3 m or 9.8 ft)	NTFN03AB
Ethernet cable for an Multiservice Switch 7460 or a Multiservice Switch 7480 (15 m or 49.2 ft)	NTFN04AB
Ethernet crossover cable for an NTNQ92 FP or NTNQ95 FP (10 m or 32.8 ft), Class B (optional)	A0822236
Ethernet straight-through cable for an NTNQ92 FP or NTNQ95 FP (10 m or 32.8 ft), Class B (optional)	A0821568
Ethernet LAN adapter cable for an NTNQ92 FP or NTNQ95 FP Class A (optional)	NTHQ11BA
(Sheet 3 of 4)	

Table 185 (continued)
Multiservice Switch cable part numbers sorted by interface type

Description	Order Code
STM-1 electrical sparing panel control cable (1.5 m or 4.9 ft)	NTPS11AA
STM-1 electrical sparing panel control cable (3.0 m or 9.8 ft)	NTPS11AB
STM-1 electrical sparing panel control cable (15 m or 49.2 ft)	NTPS11AC
STM-1 electrical sparing panel signal cable (1.5 m or 4.9 ft)	NTPS12AA
STM-1 electrical sparing panel signal cable (3.0 m or 9.8 ft)	NTPS12AB
STM-1 electrical sparing panel signal cable (15 m or 49.2 ft)	NTPS12AC
(Sheet 4 of 4)	

Table 186
Multiservice Switch miscellaneous items part numbers

Description	Order code
Antistatic wrist strap	A0378999
Blank processor card	NTBP23
Cover for inter-panel flexi-cable connections between one-for-n MSA32 sparing panels with BNC or DB15 connectors	NTPS07
Multiservice Switch 7460 blank power supply faceplate	NTPS22
Multiservice Switch 7480 blank power supply faceplate	NTBP51
Multiservice Switch 7440 blank power supply faceplate	NTEP41
Ferrite kit (originally for 1-port E3 FP)	NTFP54
Ferrite kit (clip-on ferrite beads for dc power input cables)	NTJS6381
Ferrite kit for 4pEth100BaseT FP (NTNQ95) and 8pEth100BaseT FP (NTNQ92) (one kit per 4 Ethernet ports)	NTNQ98

Multiservice Switch 7400

Hardware Description

Release 6.1

Copyright © 2004 Nortel Networks.
All Rights Reserved.

NORTEL, NORTEL NETWORKS, the globemark design, the NORTEL NETWORKS corporate logo, DPN, DPN-100 and PASSPORT are trademarks of Nortel Networks.
AMP, MATE-N-LOK, and Z-PACK are trademarks of Tyco Electronics of Canada, Ltd.

Publication: NN10600-170
Document status: Standard
Document version: 6.1S2
Document date: November 2004
Printed in Canada.