Nortel Communication Server 1000

Mini-Carrier Remote Fundamentals

Release: 7.0
Document Revision: 04.01

www.nortel.com

NN43001-557

Nortel Communication Server 1000
Release: 7.0
Publication: NN43001-557
Document release date: 4 June 2010

Copyright © 2003-2010 Nortel Networks. All Rights Reserved.

While the information in this document is believed to be accurate and reliable, except as otherwise expressly agreed to in writing NORTEL PROVIDES THIS DOCUMENT "AS IS" WITHOUT WARRANTY OR CONDITION OF ANY KIND, EITHER EXPRESS OR IMPLIED. The information and/or products described in this document are subject to change without notice.

Nortel, Nortel Networks, the Nortel logo, and the Globemark are trademarks of Nortel Networks.

All other trademarks are the property of their respective owners.

Contents

New in this release 5

Features 5

Other 5

Revision history 5

How to get help 7

Getting Help from the Nortel Web site 7

Getting Help over the phone from a Nortel Solutions Center 7

Getting help from a specialist by using an Express Routing Code 8

Getting Help through a Nortel distributor or reseller 8

Introduction 9

Subject 9

Note on legacy products and releases 9

Applicable systems 9

Intended audience 10

Conventions 10

Terminology 10

Related information 11

Description 13

Contents 13

System overview 13

Product description 15

Physical architecture 17

LMI/LMX Multi-I/O cable assembly 21

RMI Multi-I/O cable assembly 22

Functionality 23

Physical description 32

Engineering guidelines 34

Mechanical overview 40

Power requirement 43

Environmental requirements 43

Safety requirements 46

Copyright © 2003-2010 Nortel Networks. All Rights Reserved.

Installation and configuration **47**
Contents 47
Installation overview 47
Quick reference to system installation 48
System installation 50
System configuration 67
Host MMI interface 69

Maintenance **101**
Contents 101
Introduction 101
Repair and replacement 101
Maintenance overview 102
MMI diagnostic tools 104
Fault isolation/correction using MMI maintenance commands 105
Monitoring for errors 108

Man-Machine Interface (MMI) commands **115**

Regulatory approvals **119**
Regulatory notices 119

Pin-outs **123**
LMI Multi I/O cable assembly 123
T1 CSU Cable Kit adapters 127

Copyright © 2003-2010 Nortel Networks. All Rights Reserved.

New in this release

The following sections detail what is new for Nortel Communication Server 1000 Release 7.0.

Navigation

- “Features” (page 5)
- “Other” (page 5)

Features

There have been no updates to the feature descriptions in this document.

Other

See the following section for information about changes that are not feature-related:

Revision history

June 2010
Standard 04.01. This document is up-issued to support Communication Server 1000 Release 7.0.

January 2010
Standard 03.02. This document is up-issued to support Communication Server 1000 Release 6.0.

May 2009
Standard 03.01. This document is up-issued for Nortel Communication Server 1000 Release 6.0.

December 2007
Standard 02.01. This document is up-issued for Communication Server 1000 Release 5.5.

Copyright © 2003-2010 Nortel Networks. All Rights Reserved.

June 2007
Standard 01.02. This document is up-issued to remove the Nortel Network confidential statement.

May 2007
Standard 01.01. This document is issued to support Communication Server 1000 Release 5.0. This document contains information previously contained in the following legacy document, now retired: Mini-Carrier Remote: Service Implementation Guide (553-3001-357). No new content has been added for Communication Server 1000 Release 5.0. All references to Communication Server 1000 Release 4.5 are applicable to Communication Server 1000 Release 5.0.

August 2005
Standard 3.00. This document is up-issued to support Communication Server 1000 Release 4.5.

September 2004
Standard 2.00. This document is up-issued for Communication Server 1000 Release 4.0.

October 2003
Standard 1.00. This document is a new NTP for Succession 3.0. It was created to support a restructuring of the Documentation Library. This document contains information previously contained in the following legacy document, now retired: *Mini-Carrier Remote: Description, Installation, and Maintenance* (553-3001-023) .

Copyright © 2003-2010 Nortel Networks. All Rights Reserved.

How to get help

This chapter explains how to get help for Nortel products and services.

Getting Help from the Nortel Web site

The best source of support for Nortel products is the Nortel Support Web site:

www.nortel.com/support

This site provides quick access to software, documentation, bulletins, and tools to address issues with Nortel products. From this site, you can:

- download software, documentation, and product bulletins
- search the Technical Support Web site and the Nortel Knowledge Base for answers to technical issues
- sign up for automatic notification of new software and documentation for Nortel equipment
- open and manage technical support cases

Getting Help over the phone from a Nortel Solutions Center

If you do not find the information you require on the Nortel Technical Support web site, and you have a Nortel support contract, you can also get help over the telephone from a Nortel Solutions Center.

In North America, call 1-800-4NORTEL (1-800-466-7835).

Outside North America, go to the following Web site to obtain the telephone number for your region:

www.nortel.com/callus

Copyright © 2003-2010 Nortel Networks. All Rights Reserved.

Getting help from a specialist by using an Express Routing Code

To access some Nortel Technical Solutions Centers, you can use an Express Routing Code (ERC) to quickly route your call to a specialist in your Nortel product or service. To locate the ERC for your product or service, go to:

www.nortel.com/erc

Getting Help through a Nortel distributor or reseller

If you purchased a service contract for your Nortel product from a distributor or authorized reseller, contact the technical support staff for that distributor or reseller.

Copyright © 2003-2010 Nortel Networks. All Rights Reserved.

Introduction

This document is a global document. Contact your system supplier or your Nortel representative to verify that the hardware and software described are supported in your area.

Subject

This Nortel Technical Publication (NTP) provides information about implementing the Mini-Carrier Remote feature on CS 1000 and Meridian 1 systems.

It describes the operation of the mini-carrier equipment and provides specific information on how to install and maintain this equipment as an integral part of the PBX systems. Mini-Carrier Remote equipment configuration is identical to the equivalent standard system equipment. However, there are some additional mini-carrier specific commands that can be executed using the Man-Machine Interface (MMI) terminal to specifically control mini-carrier equipment.

The Mini-Carrier Remote system complies with Part 68 of the United States Federal Communication Commission (FCC) rules. Refer to "Regulatory approvals" (page 119).

Note on legacy products and releases

This NTP contains information about systems, components, and features that are compatible with Nortel Communication Server 1000 software. For more information on legacy products and releases, click the **Technical Documentation** link under **Support & Training** on the Nortel home page:

www.nortel.com

Applicable systems

This document applies to the following systems:

- Communication Server 1000M Single Group (CS 1000M SG)
- Communication Server 1000M Multi Group (CS 1000M MG)

Copyright © 2003-2010 Nortel Networks. All Rights Reserved.

- Communication Server 1000E (CS 1000E)
- Meridian 1

Note: When upgrading software, memory upgrades may be required on the Signaling Server, the Call Server, or both.

System migration

When particular Meridian 1systems are upgraded to run CS 1000 software and configured to include a Signaling Server, they become CS 1000 systems. The following table lists each Meridian 1 system that supports an upgrade path to a CS 1000 system.

Table 1
Meridian 1 systems to CS 1000 systems

This Meridian 1 system...	Maps to this CS 1000M system
Meridian 1 PBX 11C Chassis	CS 1000E
Meridian 1 PBX 11C Cabinet	CS 1000E
Meridian 1 PBX 61C	CS 1000M Single Group
Meridian 1 PBX 81C	CS 1000M Multi Group

For more information, see one or more of the following NTPs:

- *CS 1000M and Meridian 1 Large System Upgrades Overview* (NN43021-458)
- *Communication Server 1000E Upgrades* (NN43041-458)
- *Communication Server 1000E Upgrade - Hardware Upgrade Procedures* (NN43041-464)

Intended audience

This document is intended for individuals responsible for administering Mini-Carrier Remote for CS 1000 and Meridian 1 systems.

Conventions

Terminology

In this document, the following systems are referred to generically as system:

- Communication Server 1000E (CS 1000E)
- Communication Server 1000M (CS 1000M)
- Meridian 1

Copyright © 2003-2010 Nortel Networks. All Rights Reserved.

Related information

This section lists information sources that relate to this document.

Technical documentation

The following technical documents are referenced in this document:

- *Communication Server 1000M and Meridian 1 Large System Planning and Engineering* (NN43021-220)
- *Communication Server 1000M and Meridian 1 Large System Installation and Commissioning* (NN43021-310)
- *Communication Server 1000M and Meridian 1 Large System Maintenance* (NN43021-700)

Online

To access Nortel documentation online, click the **Technical Documentation** link under **Support & Training** on the Nortel Web site:

www.nortel.com

CD-ROM

To obtain Nortel documentation on CD-ROM, contact your Nortel customer representative.

Copyright © 2003-2010 Nortel Networks. All Rights Reserved.

Copyright © 2003-2010 Nortel Networks. All Rights Reserved.

Description

Contents

This section contains information on the following topics:

“System overview” (page 13)

“Product description” (page 15)

“Physical architecture” (page 17)

“Functionality” (page 23)

“Physical description” (page 32)

“Engineering guidelines” (page 34)

“Mechanical overview” (page 40)

“Power requirement” (page 43)

“Environmental requirements” (page 43)

“Safety requirements” (page 46)

System overview

The Mini-Carrier Remote (MCR) system provides service for up to 128 analog and/or digital telephones over one or two T1 carrier links in a system (Figure 1 "Mini-Carrier Remote (sample configuration)" (page 15)). Analog trunks at the remote site are also supported. MCR makes remote sites configured with analog trunks "survivable." If the T1 carrier link(s) between the local and remote sites fail, MCR will provide essential functionality to as many as 16 digital telephones at the remote site, until full service is restored.

Copyright © 2003-2010 Nortel Networks. All Rights Reserved.

Supporting remote sites rather than multiple switches is attractive for a number of reasons. Remote sites allow the sharing of voice mail and other peripherals, the sharing of software upgrades, and the maintenance of a single database from a single location. MCR provides a cost-effective, feature-rich solution for the majority of remote site applications.

With Carrier Remote IPE or Fiber Remote IPE, each remote site consumes an entire Superloop slot. With MCR, however, remote telephones consume the same level of switch resources as local telephones. Minimization of switch resource consumption at each remote site allows one IPE shelf to support up to eight remote sites. If fewer than eight sites are needed on a particular shelf, the remaining card slots may be used for local telephones.

MCR consists of three circuit packs: two at the local site, the Local Mini-carrier Interface card (LMI) and Local Mini-carrier Extender card (LMX); and one at the remote site, the Remote Mini-carrier Interface card (RMI). At the local site, the LMI emulates two standard IPE line cards and can interface to the remote site through either one or two T1 carrier links. Up to three LMXs may be added to the LMI to increase the number of telephones serviced at the remote site. Each LMX, a double-wide circuit pack, remote two additional line cards. A maximum of eight line cards may be remoted by one Mini-Carrier Remote system.

At the remote site, MCR uses the existing cabinet and power supply, standard IPE line cards, and the RMI. The RMI is inserted into the core processor slot of the cabinet. This allows customers with a system at the main location and smaller locations, to upgrade the smaller sites to remote sites while protecting the bulk of their investment (cabinets, power supplies, line cards, cabling, and telephones). The MCR system supports Extended Digital Line Cards (XDLCs), Extended Universal Trunk cards (XUTs), and Extended Message-waiting Line Cards (XMLC) at the remote sites.

Objectives

MCR's objectives are to provide:

- a cost-effective method for remoting digital telephones, analog (500/2500-type) sets, and analog trunks from a local switch,
- remote survivability during link failure,
- fractional T1 use,
- increased availability of superloop network card slots (MCR uses no additional network cards).

Copyright © 2003-2010 Nortel Networks. All Rights Reserved.

Compatible systems

MCR is compatible with any system that can support an Extended Digital Line Card (XDLC), Extended Analog Line Card (XALC), Extended Message-waiting Line Card (XMLC), or Extended Universal Trunk (XUT) circuit pack.

Figure 1
Mini-Carrier Remote (sample configuration)

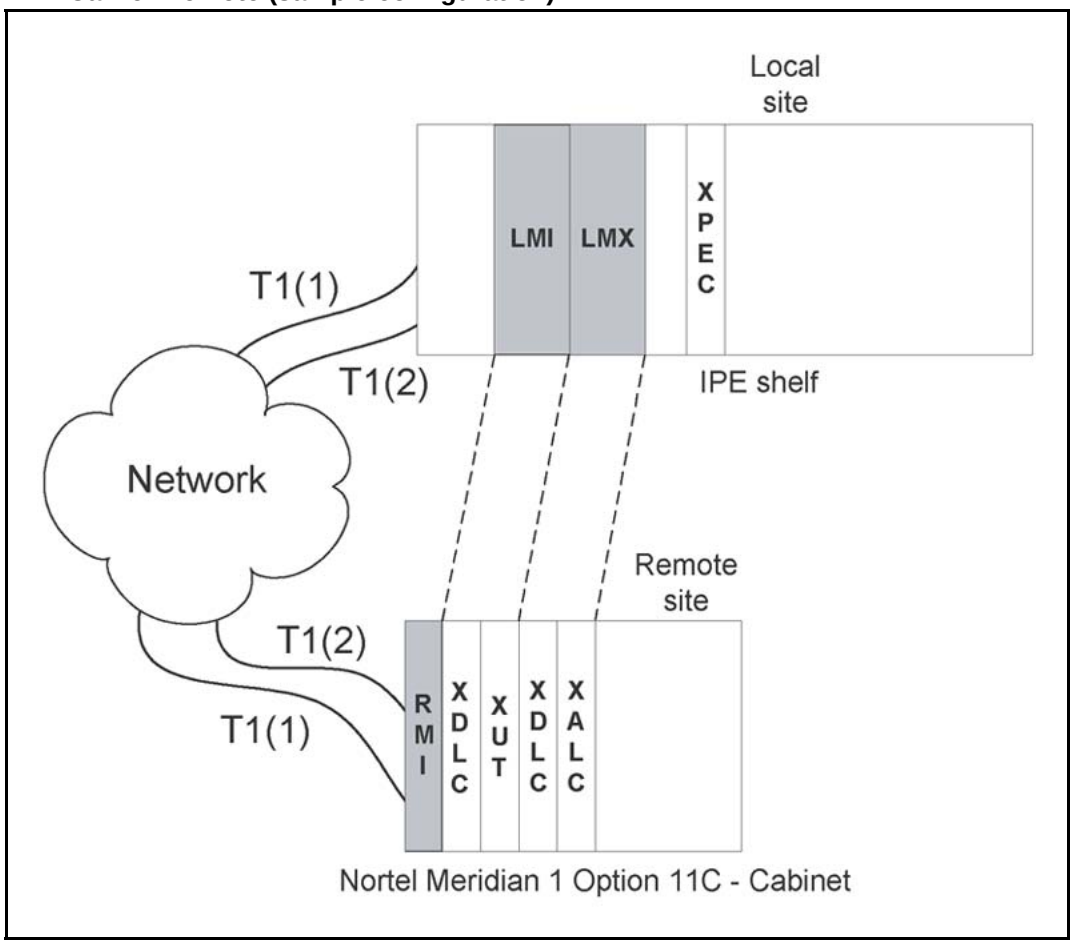

Product description

MCR remotes digital telephones, analog telephones, and analog trunks from a local switch. The system is modular in that the local site uses one Local Mini-carrier Interface card (LMI) and up to three Local Mini-carrier Extender cards (LMXs). At the remote site, a single Remote Mini-carrier Interface card (RMI), connected via one or two T1 carrier links to the LMI at the local site, controls up to eight standard IPE line cards.

Copyright © 2003-2010 Nortel Networks. All Rights Reserved.

The LMI and LMX are double-wide cards, each of which occupies two adjacent line card slots. They consist of a motherboard with circuitry and a small daughterboard that connects to the DS-30X interface of the adjacent slot. The RMI is a single-width card that fits into the slot labeled 0 or CPU in the cabinet.

The system may be configured as if each slot occupied by an LMI or an LMX was occupied by one of the following standard IPE line cards:

- Extended Digital Line Card (XDLC)
- Extended Universal Trunk (XUT)
- Extended Analog Line Card (XALC)
- Extended Message-waiting Line Card (XMLC)
- Lineside T1 Interface (LTI)

Each card configured at the local site is electronically transported to the remote site, where an actual line card is used. The line cards at the remote site function as if they were at the local site.

Starting with the Mini Carrier Remote Firmware 12.01, LMI and RMI have a daughterboard installed which contains the Flash Memory Module (FMM).

Local site components

The local site components of MCR are the LMI and the LMX. Up to 3 LMXs may be connected to an LMI to form a "group." The cards in a group connect in a daisy chain using the LMI/LMX Multi-I/O cable assembly (NT5D86), see Figure 6 "LMI/LMX Multi-I/O cable assembly (NT5D86)" (page 22). This cable carries DS-30X and MicroLink between the LMI and each LMX. The LMI switches the PCM between the T1 timeslots and the DS-30X timeslots. The LMXs provide an interface for signaling messages between the LMI and the DS-30X from the IPE backplane. The LMI has a MicroLink interface to each LMX and to the RMI. The LMI Multi-I/O cable assembly (NT5D85) is used to connect the MMI, SDI, Alarm, and up to 2 T1 carrier links to the LMI (Figure 5 "LMI Multi-I/O cable assembly (NT5D85)" (page 21)).

Remote site components

The remote site consists of a Remote Mini-carrier Interface card (RMI) and an cabinet. The cabinet contains the standard power supply and standard IPE line cards. The only additional components at the remote site are the RMI and the RMI Multi-I/O cable assembly (NT5D87, Figure 7 "RMI Multi-I/O Cable Assembly (NT5D87)" (page 23)). The RMI plugs into the core processor slot in the cabinet and communicates with the LMI in order

Copyright © 2003-2010 Nortel Networks. All Rights Reserved.

to provide the interface between the local site's IPE backplane and the remote site's line cards. The switch and the line cards function as if the line cards were plugged into the local IPE cabinet.

The LMI and RMI utilize two timeslots for signaling communication between the LMI processor and the RMI processor, and an SDI (Serial Data Interface) link for the remote site. The two timeslots are transmitted across both T1s for redundancy. The remaining 22 timeslots of each T1 may be used for voice or data.

Physical architecture

The MCR system consists of three separate line cards. These line cards are the Local Mini-carrier Interface card (LMI), the Local Mini-carrier Extender card (LMX), and the Remote Mini-carrier Remote Interface card (RMI). The LMI and LMX cards take up two line card slots each. Due to spacing differences of the IPE cabinet at the local site and the cabinet at the remote site, two versions of each card are available.

The MCR system also consists of three new cable assemblies. These assemblies are the LMI Multi-I/O cable assembly (NT5D85), LMI/LMX Multi-I/O cable assembly (NT5D86), and the RMI Multi-I/O cable assembly (NT5D87).

Physical description of cards

The LMI and LMX cards are double-wide line cards, each taking up two card slots. All three card faceplates have ejector tabs to facilitate insertion and removal.

The LMI, LMX, and RMI faceplates are illustrated in Figure 2 "LMI (NT5D64/NT5D68) faceplate" (page 18), Figure 3 "LMX (NT5D65/NT5D69) faceplate" (page 19), and Figure 4 "RMI (NT5D67) faceplate" (page 20), respectively.

Copyright © 2003-2010 Nortel Networks. All Rights Reserved.

Figure 2
LMI (NT5D64/NT5D68) faceplate

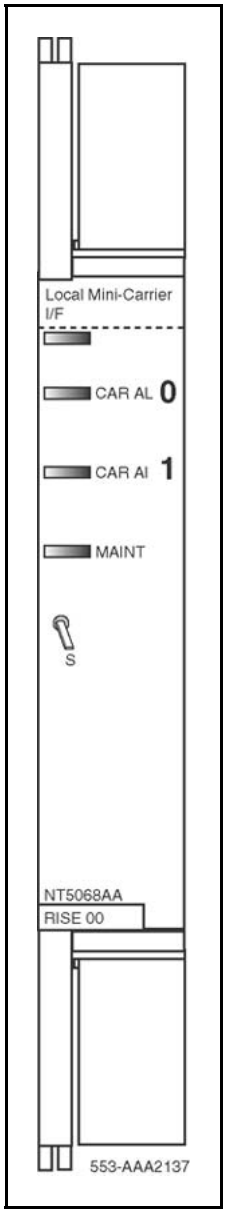

The LMI has four LED indicators — Carrier 0 Alarm, Carrier 1 Alarm, Maintenance, and Status.

Copyright © 2003-2010 Nortel Networks. All Rights Reserved.

Figure 3
LMX (NT5D65/NT5D69) faceplate

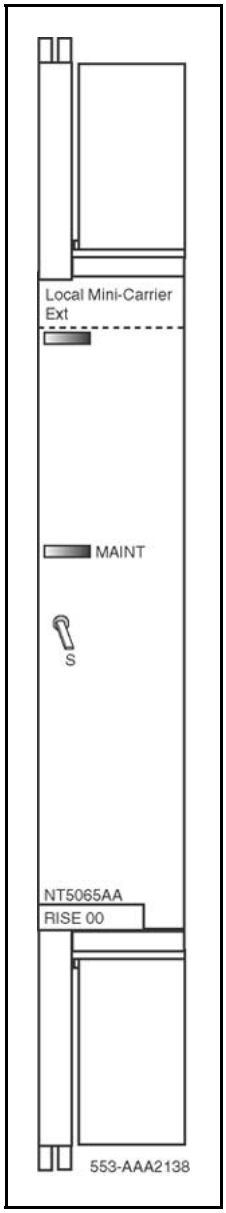

The LMX has two LEDs — Maintenance and Status.

Copyright © 2003-2010 Nortel Networks. All Rights Reserved.

Figure 4
RMI (NT5D67) faceplate

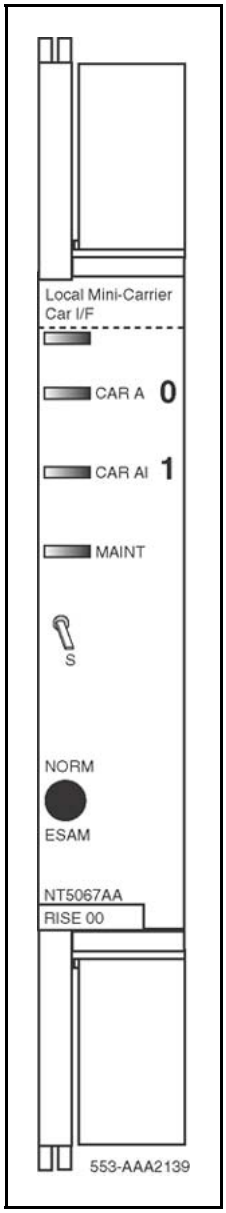

The RMI is a single-width line card taking up just one card slot. It has the same four LEDs as the LMI.

LMI Multi-I/O cable assembly

The LMI Multi-I/O cable assembly (NT5D85), provides the local site interface between the LMI and the MMI, SDI, Alarm, and the T1 carrier links. See "LMI Multi I/O cable assembly" (page 123) for pin-out information.

Copyright © 2003-2010 Nortel Networks. All Rights Reserved.

Figure 5
LMI Multi-I/O cable assembly (NT5D85)

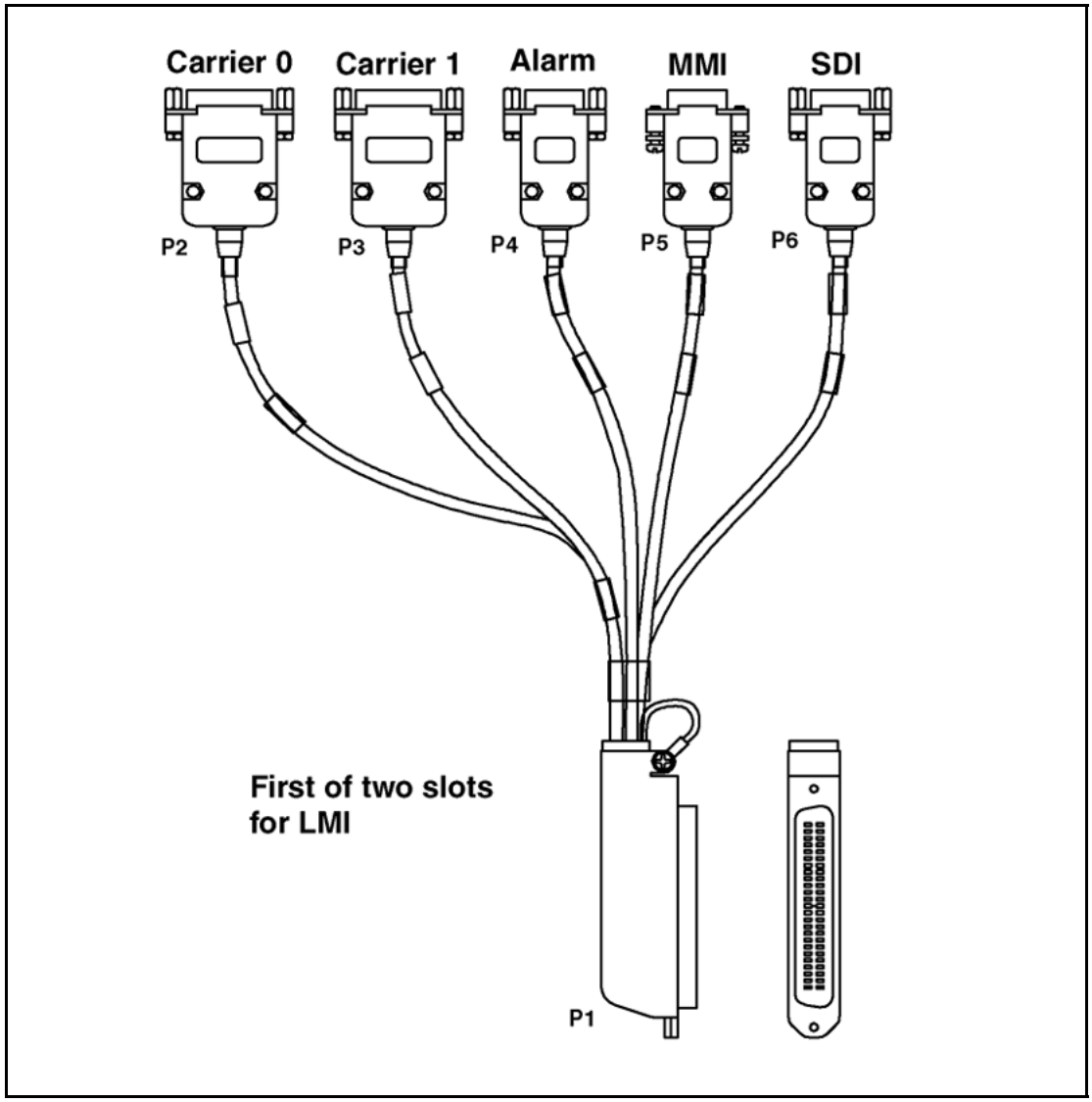

LMI/LMX Multi-I/O cable assembly

The LMI/LMX Multi-I/O cable assembly (NT5D86) provides the local site interface between the LMI and up to three LMXs. This cable carries the DS-30X and MMI interfaces. See "LMI/LMX Multi-I/O cable assembly" (page 124) for pin-out information.

Copyright © 2003-2010 Nortel Networks. All Rights Reserved.

Figure 6
LMI/LMX Multi-I/O cable assembly (NT5D86)

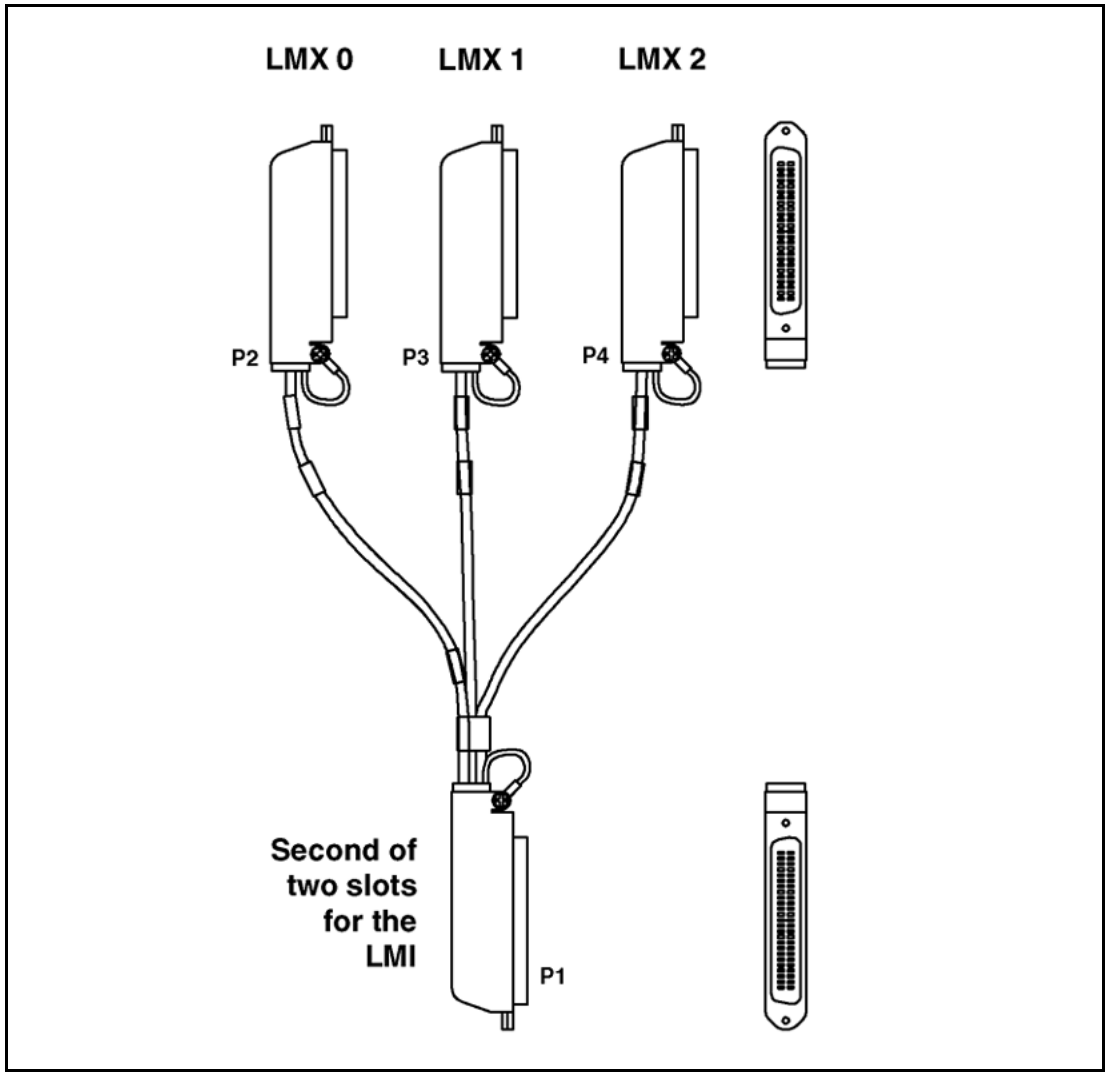

RMI Multi-I/O cable assembly

RMI Multi-I/O cable assembly (NT5D87) provides the remote site interface between the RMI and the MMI, Alarm, and the T1 carrier links. See "RMI Multi-I/O cable assembly" (page 125) for pin-out information.

Copyright © 2003-2010 Nortel Networks. All Rights Reserved.

Figure 7
RMI Multi-I/O Cable Assembly (NT5D87)

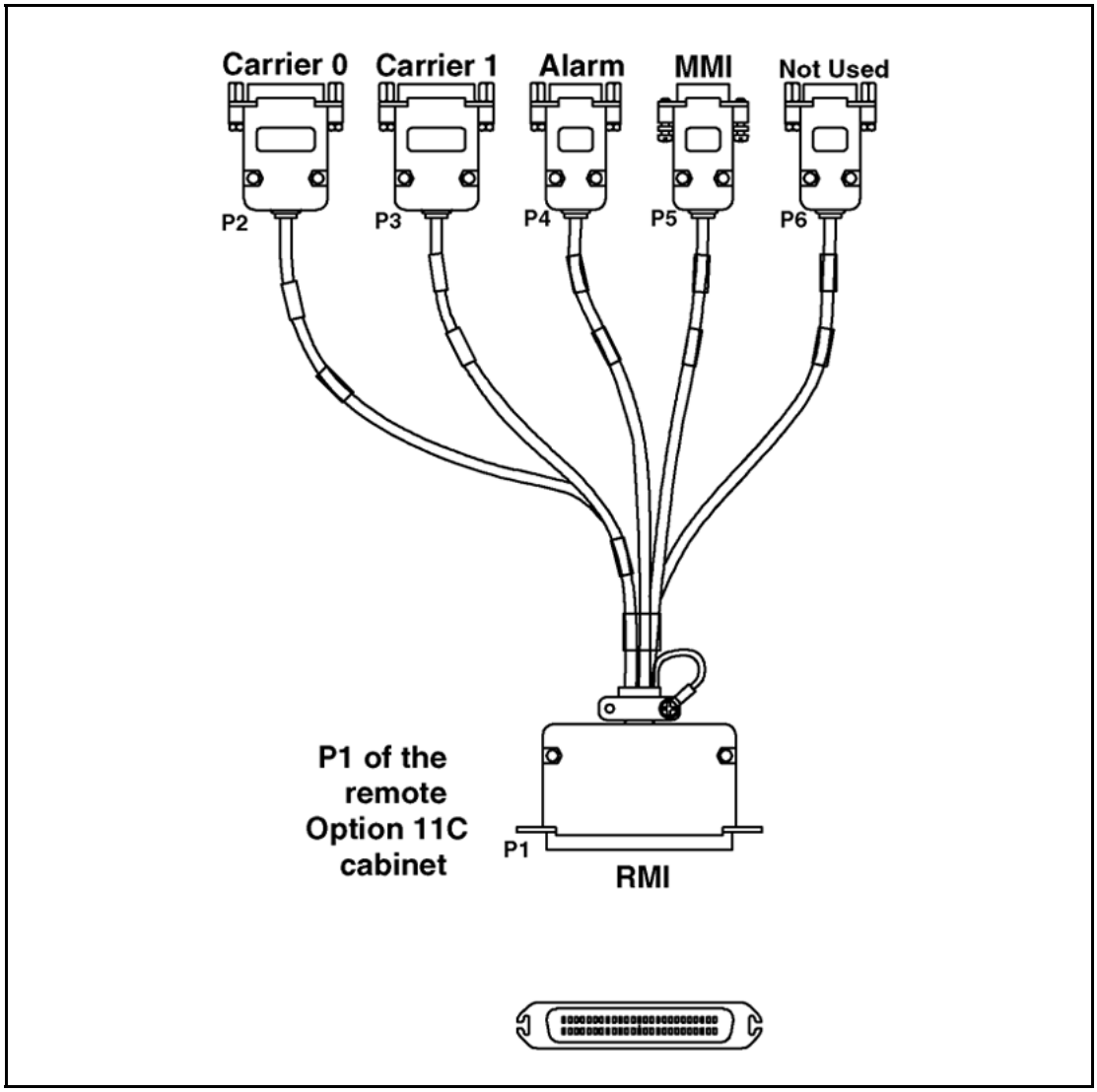

Functionality

The Mini-Carrier Remote system can be user-configured to use only certain timeslots, allowing "drop-and-insert" channel banks to use the timeslots not used by MCR. This allows customers to use LAN bridges via the remaining timeslots to connect between local and remote LANs. MCR always uses the first two channels of T1 (channels 1 and 2).

ESF and D4 framing modes are supported, CRC-6 errors are counted in ESF mode, and bipolar violations are counted in D4 mode to determine system health. B8ZS must always be used for MCR. Signaling must be clear-channel end-to-end. Robbed-bit signaling is not supported.

Copyright © 2003-2010 Nortel Networks. All Rights Reserved.

One Mini-Carrier Remote system supports eight IPE cards physically located up to 4000 miles apart (depending on actual T1 routing) over as many as 2 standard T1 (1.544 Mbps) facilities. MCR survives up to 54 milliseconds (ms) of delay. For analog channels, echo cancellers are recommended for round-trip T1 delays of greater than 5ms. MCR signaling channels 1 and 2 must not go through echo cancellers.

Note: Echo cancellers must not be used for data calls.

MCR Firmware Release 12.01 introduced:

- requirement for the NT7R76AA A0538671 Flash Upgrade Module, one module to be installed on each LIM, LMX and RMI card.
- Support for the M2006, M2008, M2250, M3890x Phase 1-3 digital telephones for Normal and Emergency Stand-Alone Mode.
- M3904 and M3905 digital phone DBA Support.
- Preservation of key labels of the M390x telephones when ESAM is configured.
- T1 span failure and call recovery algorithm — allows dynamic movement of existing calls from a failed T1 span to available time slots on the second T1 span.
- Provision backup/restore — a backup copy of the ESAM database on the MCR can be made to a PC over the serial port.

System characteristics

The MCR system:

- is compliant with North American requirements,
- remotes existing digital and analog line cards as well as the existing analog universal trunk card,
- supports existing design versions of the cabinets including AC and DC power options as well as the existing environmental requirements for both local and remote sites,
- supports existing design versions of the IPE module, cabinet and power components for use at the local site,
- possesses limited call processing capability, referred to as Emergency Stand-Alone Mode (ESAM), during link failure or initial installation at the remote site,
- employs a super set of the Man-Machine Interface (MMI) used in the Carrier Remote Interface product. The Mini-Carrier Remote system uses the same type of extensive carrier diagnostics that have proven useful on the Carrier Remote IPE product,

Copyright © 2003-2010 Nortel Networks. All Rights Reserved.

- offers controlled access through a password,
- allows multiple LMIs in the same system to share a single 2400 or 9600 baud MMI terminal (LMXs are accessed through the appropriate LMI),
- supports remote RS-232 serial data interface for the MMI,
- is compatible with standard T1 test equipment for link diagnostic purposes,
- provides automatic and manual fault detection, isolation and correction for MCR components similar to that of the Carrier Remote Interface product,
- supports existing software diagnostic routines,
- provides alarm notification for link performance degradation, and
- supports up to 32 voice ports and 32 data ports through a single LMI and up to 22 simultaneous telephone calls for each T1 carrier link used.

Blocking

The level of blocking is determined by the number of telephones configured at the remote site. Mini-Carrier Remote supports up to 44 simultaneous calls per LMI. If a non-blocking system is desired, the telephones may be configured appropriately. Up to 128 telephones can be configured yielding a 44:128 ratio. If installing telephones for use by Automatic Call Distribution (ACD) agents, allot one timeslot for each telephone configured for ACD functionality. This ensures non-blocked access for the ACD agent.

T1 framing modes ESF and D4 are supported. T1 B8ZS encoding must be used due to the digital nature of the T1 usage.

LED indicators

A red faceplate LED indicates the status of the LMI. Two red Carrier LEDs indicate the status of the carriers, and a Maintenance LED indicates the condition of all non-carriers that affect service.

DIP switches

Three cards have DIP switches that must be configured prior to card insertion. On the LMX, DIP switch settings identify the LMX's position with respect to the LMI and RMI. DIP switch settings on the LMI and RMI determine the binary daisy chain address, T1 line build-out, framing mode, terminal baud, and terminal settings.

Copyright © 2003-2010 Nortel Networks. All Rights Reserved.

Man-Machine Interface

See "Installation and configuration" (page 47) for a detailed explanation of MMI commands, and "Man-Machine Interface (MMI) commands" (page 115) for a listing and brief discussion of each command.

Daisy chaining

LMIs may be daisy-chained together to share a single maintenance terminal and a single SDI port. Each LMI has a DIP switch-configurable daisy-chain address. LMX and RMI status can be determined by logging into their associated LMI.

SDI functionality

The LMI may be connected to an SDI port on the switch, providing a "host pass-through" capability at both local and remote sites. This allows craftspeople at the remote site to have access to the system TTY connection, and provides a single MMI/SDI terminal at the local site.

Alarms

An alarm condition is indicated by the appropriate LMI and RMI faceplate LEDs. The cards are also equipped with a single dry alarm contact output to indicate alarm status. A normally-closed and a normally-open dry alarm contact point are both provided. These contacts may be connected to customer-provided alarm-sensing equipment, if desired.

If alarms are enabled on the LMI or RMI using the **`ALARM ENABLE (A E)`** MMI command (see "**`ALARM ENABLE (A E)`**" (page 74)), an alarm state on any Mini-Carrier card connected to the LMI or RMI causes the normally-closed contact on that card to open and the normally-open contact on that card to simultaneously close, thus activating the alarm. If alarms are *disabled* at the LMI or RMI using the **`ALARM DISABLE (A D)`** MMI command (see "**`ALARM DISABLE (A D)`**" (page 74)), an alarm state will be indicated by the faceplate LEDs, but the alarm relay will not change states.

> ***Note:*** The **`ALARM DISABLE (A D)`** command may be used to return the dry alarm contacts to their relaxed state during an active alarm so that the only alarm notification will be the faceplate LEDs, thus allowing craftspeople time to locate the cause of an active alarm without a constant siren, horn, or other audible alarm notification.

Self-Test

The self-test checks all RAM, read/write locations, ASICS, and performs a complete T1 local relay loopback using the onboard test clock. A successful self-test is indicated by the faceplate LEDs flashing three times. The board will not go into service until the entire self-test passes.

Copyright © 2003-2010 Nortel Networks. All Rights Reserved.

If the LEDs do not flash three times, unseat the card using the faceplate ejector tabs, breaking the card's connection with the backplane. Re-insert the card and lock it in place with the ejector tabs. If the LEDs still do not flash three times, contact a sales representative about returning the card to Nortelfor repair or replacement.

Every time an MCR card boots, the self-test examines Flash memory to see if it has a good checksum. If not, the card runs a complete Flash memory read/write test. The results of the self-test are shown in Table 2 "Messages from Power-On Self-Test for Flash Memory" (page 27).

Table 2
Messages from Power-On Self-Test for Flash Memory

Message	Meaning
Flash test running…	This informs you that the card is functioning. You must wait for the test to finish. The Yellow Maintenance LED on the faceplate should be flashing.
FLASH NOT DETECTED	If the FMM is not installed, this message appears. This is not an error.
Flash erased and passed test	Internal Flash or FMM memory has passed the test.
Flash read/write error	Internal Flash or FMM memory has failed the test.

Timeslot assignment and hold

The determining factor for timeslot assignment is on-hook/off-hook status. When MCR detects a telephone going off-hook, it assigns a timeslot to that telephone. For analog cards, off-hook status is used to indicate a need for a timeslot. For digital cards, any speaker-on state is used to indicate a need for a timeslot; MCR assigns a timeslot to the telephone if the handset is picked up or the handsfree mode is activated. ACD sets receive a timeslot when they are logged in or when the headset is plugged in. When all speakers are turned off and all ACD sets are logged off, MCR determines all timeslots to be available.

As long as the digital set is off-hook, it retains the timeslot. An MCR user may place a call on hold, make a second call, and switch between calls. However, the call on hold is not occupying a timeslot. If the user places the digital set on-hook while there is still a call on hold, the timeslot is lost, but not the call. To re-establish the call, another timeslot must be available. If the MCR user tries to access the call that was placed on hold while no timeslots are available, the user will receive re-order but the call will remain on hold. After receiving re-order, the user may place the call back on hold and try again for a timeslot. This may be repeated until a timeslot is available or the caller hangs up.

Copyright © 2003-2010 Nortel Networks. All Rights Reserved.

Blocking

With the number of TNs greater than the number of T1 channels, calls between the remoted line card and the switch may be blocked due to the lack of an available timeslot. Normally, all signaling messages between the RMI and the switch are passed through the MCR system, but not during blocked situations.

Analog cards and digital cards handle blocking differently. For analog sets, ringing messages destined for a remoted line card are dropped when a time-slot allocation is attempted but a timeslot is not available. This enables the caller to be forwarded to voice mail when no timeslots are available. Also, when no timeslots are available, off-hook messages from the remoted phones are not transported across the MCR. Instead, the remote user receives re-order, or fast-busy (a fast busy signal) to indicate that no timeslot is available.

With digital sets, ringing messages are not dropped when no timeslots are available. If the user answers a ringing telephone when no timeslots are available, the user receives a re-order signal to indicate the blocked situation. The caller will hear silence, since the MCR system is out of timeslots.

CardLAN

The local LMI and LMX act as a cardLAN slave to the XPEC or CPU card.

The RMI board sits in the CPU slot and therefore is the cardLAN master. The local boards wait for the RMI to enable them to respond to their cardLAN master. The RMI polls all 10 line card slots at the remote site in a round-robin fashion and looks for newly inserted cards.

Upon LMX detection, the RMI queries the LMX with all known cardLAN messages so that it can provide this information to the local card that is emulating that LMX. Upon receiving the last message from the RMI, the local board begins responding to polls normally. At each local cardLAN query, the local card responds immediately, and it also sends that query to the RMI. The RMI then queries the remoting LMX and sends the response back to the local card. This method keeps the local site one poll behind, but this is necessary to be able to respond to cardLAN fast enough at the local site over long T1 distances.

If the RMI detects that an LMX has been removed or changed, it disables or initializes the appropriate local card's cardLAN task. Also, if the local card receives a cardLAN message that is undefined, no attempt is made to answer that message. Should the existing Nortelline cards be updated such that they operate on an expanded cardLAN message set, the MCR system must also be updated.

Copyright © 2003-2010 Nortel Networks. All Rights Reserved.

T1 monitoring

MCR keeps performance statistics for the current hour and for each hour in the past twenty-four. MCR's T1 framer chips monitor the performance of the T1 links. Once a second MCR reads the framer registers and keeps a record of the following statistics:

- **Errored Second** — 1 or more CRC-6 errors or 1 or more out of frame (OOF) conditions during the second
- **Bursty Second** — More than 1 but less than 320 CRC-6 errors during the second
- **Severely Errored Second (SES)** — 320 or more CRC-6 errors or 1 or more out of frames (OOF) during the second (not displayed)
- **Unavailable Seconds (UAS)** — Unavailable state starts with 10 consecutive SES and ends with 10 consecutive non-SES
- **Controlled Frame Slip Seconds** — 1 or more frame slips during the second
- **Loss of Frame Count** — Loss of Frame or Loss of Signal for 3 consecutive seconds

When the T1 framer is configured for D4 operation, the firmware uses bi-polar violations instead of CRC-6 errors. When using bi-polar violations, the total number of bi-polar violations are used as CRC-6 errors in the above calculations.

In addition to the above performance statistics, the firmware keeps a total error counter for each carrier. The error counter is a count of the CRC-6 errors + frame slips + out-of-frame (OOF). This counter counts from 0 to 65,535. Once reaching 65,535 the counter is not incremented further. The counter can be reset to 0 by entering the **`CLEAR ERROR (C E)`** command.

Emergency Stand-Alone Mode

Emergency Stand Alone Mode (ESAM) is a Mini-Carrier Remote feature that provides limited telephone service to 16 digital telephones and 8 XUT ports. The RMI has a faceplate toggle switch that determines ESAM functionality for the board. The toggle-switch can force ESAM mode to be active at all times or allow ESAM to be automatically activated. When the switch is set to ESAM, ESAM mode will always be active. When set to NORM, automatic selection is enabled and the MMI configuration will control ESAM's activation. At the MMI, ESAM can be set to always be enabled, never be enabled, or activate when alarm level 2 is reached on all carriers.

The following models of the Meridian Digital Telephone support ESAM:

Copyright © 2003-2010 Nortel Networks. All Rights Reserved.

Table 3
Meridian Digital Telephone models supporting ESAM

With display
2008
2008HF
2216
2616

ESAM is intended to be used, primarily, in the case of an interruption in service from the T1 carrier links serving MCR systems. A two-position faceplate switch on the RMI, like the LMI, sets ESAM mode as always active or requires that the ESAM switchover be determined through each location's MMI configuration. This does not change the normal operation of MCR's telephones or trunks. During ESAM mode, however, the following changes take place:

- up to 16 digital telephones, connected to the same XDLC, may be enabled;
- ESAM is indicated on the display of configured telephones;
- station-to-station dialing capability is enabled;
- a 2- to 5-digit MMI-programmable ESAM extension takes effect,
  - all 16 telephones must have extensions of equal length,
  - default length is 4,
  - the extensions default to 4100 – 4115;
- feature key 0 accesses the primary line;
- feature key 1 accesses a secondary line,
  - the secondary line will have the same Directory Number, DN, as the primary line;
- an independently-programmable key transfers calls,
  - this key is programmed via the MMI,
  - the default key is 2;
- an independently-programmable key is used for outgoing calls,
  - this feature is programmed via the MMI,
  - the default key is 9;
- MMI-configurable *do-not-ring* feature may be used to block incoming trunk calls from ringing to a given telephone (see, "Do-not-ring mode" (page 32)),
  - as a default setting, incoming trunk calls ring to all telephones;

Copyright © 2003-2010 Nortel Networks. All Rights Reserved.

- the MMI will allow up to 8 XUT trunks to be enabled,
  - — the default setting for all trunks is disabled,
- the XUT trunk type must be configured via the MMI as
  - — none (default),
  - — CO ground start,
  - — CO loop start, or
  - — CO direct-inward-dialing (DID)
  - a. wink start
  - b. immediate start
  - c. delay start
- auto hold is enabled
  - — the default setting is enabled.

Incoming trunk calls will ring all unblocked telephones that have an unused line (primary or secondary). The unused line's lamp will flash. If both lines are unused, the primary line will flash. If the telephone is on-hook, it will ring; if the telephone is off-hook, there will be a single buzz.

When a user goes off-hook in ESAM mode, the telephone will get dial tone from the card. If the user dials the trunk access digit configured for outside lines (the default digit is 9), the dial tone will not break until the next digit is dialed. Digits dialed after the trunk is accessed will cause the card to switch DTMF for the appropriate digits into the voice path toward the CO for 50 milliseconds (ms) ON and 50 ms OFF.

If the user dials a valid extension that has an unused line, the telephone will ring and the unused line's lamp will flash (if both lines are unused, the primary line will flash). If the user dials an invalid extension, the user's telephone will get a re-order (pulsed) dial tone. If the dialed telephone has both lines in use, the calling telephone will get a busy signal.

When a call comes into a trunk, all telephones that are on-hook with an unused line will ring and the lamp associated with the unused line will flash (if both lines are unused, the primary line's lamp will flash). Telephones that are off-hook with an unused line will get a flashing lamp associated with the unused line and a warning tone. The first user to answer the call will be connected to the ringing trunk. The user can put a call on hold or transfer the call in the same manner as is used by the local system; both blind and announced transfers are supported.

Copyright © 2003-2010 Nortel Networks. All Rights Reserved.

Functionally, the only difference between the primary line and the secondary line is that the primary line will ring if both lines are available. The user can make internal or external calls from either line. If the user tries to use a trunk when all trunks are busy, the telephone will get a re-order (fast busy) signal.

Do-not-ring mode

If a user wants telephone service during ESAM operation, but does not want the telephone to ring every time there is an incoming call from a trunk, this may be configured via MMI. The telephone may be set to accept internal calls and trunk calls that are transferred from another telephone while not accepting external, nontransferable trunk calls. This allows users to take their own calls without having the telephone ringing constantly in heavy traffic situations.

Transitions into and out of ESAM cause the display to indicate that regular service will be restored in 15 seconds and all the telephones will buzz. MCR will terminate all calls when switching into and out of ESAM.

Physical description

Local Mini-carrier Interface card

The Local Mini-Carrier Interface card (LMI) resides in any two consecutive IPE card slots normally used for IPE circuit packs. The LMI consists of a motherboard and a daughterboard. The motherboard is a standard IPE-sized circuit pack with a double-wide faceplate. The daughterboard is a small circuit board that picks up the DS-30X bus connections from the adjacent card slot. The daughterboard mounts to the motherboard through five standoffs. The first card slot's 25-pair connector is used to plug into the LMI Multi-I/O cable assembly (NT5D85), that provides connection to the carriers, MMI, SDI, and alarm (see Figure 5 "LMI Multi-I/O cable assembly (NT5D85)" (page 21)). The second card slot's 25-pair connector provides connection to all three LMX boards.

Signaling Interface

The Signaling Interface block provides an interface between the signaling channels on the DS-30X and the processor. Signaling bytes are extracted from both DS-30Xs and sent to the processor under interrupt control. The processor also sends signaling messages into the DS-30Xs.

T1

The T1 interface is capable of driving 655 feet without a repeater. A CSU is required for connection to the Public Switched Telephone Network (PSTN).

Copyright © 2003-2010 Nortel Networks. All Rights Reserved.

Processor

The 68000-based processor controls all on-board functions. The processor controls all LMI operation and steers the proper carrier timeslots to each DS-30X channel. The microprocessor has its own EPROM and RAM for program and data storage.

CardLAN

The cardLAN interface is the same as that of the XDLC card, providing self-test and maintenance information. The cardLAN interface circuitry responds to both card slot addresses, acting to the switch as two independent circuit packs. The circuit pack responds to all cardLAN messages sent to both card slots. In the event that the circuit pack has a failure, both card slots indicate the failure.

Local Mini-carrier Extender card description

The Local Mini-carrier Extender card (LMX) resides in any two consecutive IPE card slots normally used for IPE circuit packs. The LMX consists of a motherboard and a daughterboard. The motherboard is a standard IPE-sized circuit pack with a double-wide faceplate. The daughterboard is a small circuit board that picks up the DS-30X bus connections from the adjacent card slot. The daughterboard mounts to the motherboard through five standoffs.

DS-30X Interfaces

The two DS-30X interfaces and a MicroLink interface are connected to the LMX's second card slot's 25-pair connector located at the back of the IPE. It interfaces to the LMI through the LMI/LMX Multi-I/O cable assembly (NT5D86, Figure 6 "LMI/LMX Multi-I/O cable assembly (NT5D86)" (page 22)).

Signaling Interface

The Signaling Interface block provides an interface between the signaling channels on the DS-30X and the processor. Signaling bytes are extracted from both DS-30X interfaces and sent to the processor. The processor also sends signaling messages into the DS-30Xs.

Processor

The 68000-based processor controls all on-board functions and all LMX operation. The microprocessor has its own EPROM and RAM for program and data storage.

CardLAN

The cardLAN interface is the same as that of an IPE line card, providing self-test and maintenance information. The cardLAN interface circuitry responds to both card slot addresses, acting to the switch as two

Copyright © 2003-2010 Nortel Networks. All Rights Reserved.

independent circuit packs. The circuit pack responds to all cardLAN messages sent to both card slots. In the event that the circuit pack has a failure, both card slots indicate the failure.

Remote Mini-carrier Interface card description

The Remote Mini-carrier Interface plugs into the core processor slot and controls up to eight standard IPE line cards (Figure 10 "Remote Mini-carrier Interface cabling" (page 43)).

T1

The T1 interface is capable of driving 655 feet without a repeater. A CSU is required for connection to the Public Switched Telephone Network (PSTN).

Processor

The 68000-based processor controls all on-board functions, all RMI operation and steers the proper T1 timeslots to each DS-30X channel. The microprocessor has its own EPROM and RAM for program and data storage. See the firmware section for more information on the operation of the processor.

CardLAN

The cardLAN interface is used to provide self-test and maintenance information and to poll all eight line cards.

Engineering guidelines

All LMIs must reside in the same IPE shelf or cabinet as their associated LMXs. Preferably, the LMI should be placed in slot 0 or 9 (NT8D37 shelves) or slot 1 (all others). If LMXs are required, the first LMX should be placed in the slot immediately to the right of the LMI. Additional LMXs are placed next to the first LMX. Grouped in this way, the cards may be randomly placed, but each card requires two consecutive card slots and each group may not be split between multiple IPE shelves.

Table 4
LMI and LMX IPE Shelf Compatibility

Local IPE Shelf	Description	LMI Compatibility	LMX Compatibility	LMI & LMX Card Slot Compatibility
NT8D37AA or NT8D37DC or NT8D37DE	IPE Module (AC or DC powered)	Must be upgrade d to NT8D37BA or NT8D37EC	Must be upgrade d to NT8D37BA or NT8D37EC	Must be upgrade d to NT8D37BA or NT8D37EC
NT8D37BA or NT8D37EC	IPE Module (AC or DC powered)	NT5D64	NT5D65	0-6 and 8-14

Copyright © 2003-2010 Nortel Networks. All Rights Reserved.

Table 4
LMI and LMX IPE Shelf Compatibility (cont'd.)

Local IPE Shelf	Description	LMI Compatibility	LMX Compatibility	LMI & LMX Card Slot Compatibility
NTAK11AA or NTAK11BB or NTAK11BC	Main Cabinet	NT5D68	NT5D69	1-9
NTAK12AA or NTAK12BB	Expansion cabinet	NT5D68	NT5D69	11-19
NTDK50BA or NTDK11BD	Main/Expansion Cabinet	NT5D68	NT5D69	1-9 Main 11-19 Ex. Cab. #1 21-29 Ex. Cab. #2

LMI and LMX interface cables

Each LMI must have an associated 2 ft. NT5D85 interface cable, which connects to the 50-pin Amphenol connectors located on the NT8D37 module's I/O Panel or the 50-pin Amphenol connectors on the lower backplane of all other compatible IPE shelves mentioned in Table 4 "LMI and LMX IPE Shelf Compatibility" (page 34).

The opposite end of each LMI Multi-I/O cable assembly (NT5D85) provides connections for the following interfaces:

- first T1 Carrier Link
- second T1 Carrier Link
- external alarm
- Man-Machine Interface (MMI)
- Serial Data Interface (SDI)

For LMX cards, only one NT5D86 cable (2 ft.) is required. It provides for connections to as many as three LMXs.

The opposite end of each LMX cable (NT5D86) provides connections for the following items:

- first LMX
- second LMX
- third LMX

If required by the customer, the following optional cables may be connected to the LMI Multi-I/O cable assembly (NT5D85):

Copyright © 2003-2010 Nortel Networks. All Rights Reserved.

- NT7R87BA CSU Cable Kit (32 ft).
  Purpose: Extends the T1 connection from the NT5D85 cable.
- NT7R66AA SDI Cable Kit (10 ft.).
  Purpose: Extends the SDI connection from the NT5D85 cable.
- NT7R66BA MMI Cable Kit (32ft).
  Purpose: Extends the Man-Machine Interface (MMI) connection from the NT5D85 cable.
- NT7R86AA Auxiliary Alarm Cable (25 ft).
  Purpose: Extends the auxiliary alarm connection from the NT5D85 cable.

All other cable connections (such as station cables, trunk circuits, and T1 carrier link connections) are customer-provided up to the local demarcation point. The local demarcation point is defined as the end of the NT5D85 (or NT7R66AA, or NT7R66BA, or NT7R86AA, or NT7R87AA).

Remote hardware requirements

The hardware installed at the remote site is divided into three categories. The first category relates to the unique MCR hardware. The second relates to the cabinet and associated hardware. The third relates to the IPE cards installed in the remote cabinet.

MCR-unique hardware

Each remote site requires an RMI card placed in the core processor card slot of the standard cabinet. In addition to the card, an interface cable is required.

RMI Multi-I/O cable assembly (NT5D87)

Each RMI must be equipped with a two-foot-long RMI Multi-I/O cable assembly (NT5D87) interface cable that connects to the 50 pin Amphenol connectors located on the lower section of the cabinet backplane.

The opposite end of each RMI Multi-I/O cable assembly (NT5D87) provides connections for the following items:

- first T1 carrier link
- second T1 carrier link
- external alarm
- Man-Machine Interface (MMI)
- Serial Data Interface (SDI)

If required by the customer, the following optional cables can be connected to the RMI Multi-I/O cable assembly (NT5D87):

Copyright © 2003-2010 Nortel Networks. All Rights Reserved.

- NT7R87BA CSU Cable Kit (32ft).
  Purpose: Extends the T1 connection from the NT5D87 cable.
- NT7R66BA MMI Cable Kit (32ft).
  Purpose: Extends the Man-Machine Interface (MMI) connection from the NT5D87BA cable.
- NT7R86AA Auxiliary Alarm Cable (25 ft).
  Purpose: Extends the auxiliary alarm connection from the NT5D87.

All other cable connections (such as station cables, trunk circuits, and T1 carrier link connections) are customer-provided up to the local demarcation point. The local demarcation point is defined as the end of the NT5D87 (or NT7R66AA, or NT7R66BA, or NT7R86AA, or NT7R87AA).

Remote hardware

Unlike Carrier Remote which uses a custom wall-mounted cabinet design similar to the cabinet, MCR reuses the standard cabinet design. Therefore, sales of MCR will most likely be provided with the latest design version of the cabinet (NTDK50BA). However, distributors may also use the previous design versions of the cabinet with MCR. Table 5 " Hardware Compatibility with MCR" (page 37) describes the various cabinet designs that are compatible with MCR at the remote end. All other equipment such as shelf power supplies, battery backup units, power cables, and floor standing pedestals are also compatible with MCR.

Table 5
Hardware Compatibility with MCR

PEC	Description
NTAK11AA, BB, or BC	Expansion Cabinet
NTAK12AA, or BB	Expansion Cabinet
NTDK50BA	Main/Expansion Cabinet

IPE hardware

MCR will only support a subset of the IPE card portfolio. Table 6 "Remote IPE Card Compatibility" (page 37) describes the IPE cards that are compatible with MCR. No other IPE cards may be equipped in the remote cabinet.

Table 6
Remote IPE Card Compatibility

PEC	Description	Card Slots	Slot Quantity
NT8D02	Digital Line Card	1-10	1
NT8D03	Analog Line Card	1-10	1
NT8D09	Analog Line Card	1-10	1

Copyright © 2003-2010 Nortel Networks. All Rights Reserved.

Table 6
Remote IPE Card Compatibility (cont'd.)

PEC	Description	Card Slots	Slot Quantity
NT8D14	Universal Analog Trunk	1-10	1
NT5D14	Line-side T1 Card	1-9	2

Survivability requirements

If any of the T1 carrier links (or any portion of them) fail during normal operation, MCR will provide "limited PBX-like" service to some of the remote telephones until the link failure is corrected. This feature requires the remote site to be equipped with analog trunk circuits (up to eight) that are terminated to a single Universal Trunk (NT8D14) located in the remote cabinet.

The remote cabinet must also be equipped with a Digital Line Card (NT8D02) and may be configured with up to 16 Meridian Digital Telephones. For a list of the models that support this feature, see Table 3 "Meridian Digital Telephone models supporting ESAM" (page 30).

Traffic capacity

Each LMI and RMI card pair can support a portion of one T1 carrier link, the full twenty-four channels of the T1 carrier link, or two full T1 carrier links. The LMX cards interface to the T1 through the LMI card, therefore, T1 provisioning is not required for these cards. The minimum number of T1 channels required for LMI/RMI card pairs is 3 out of 24. This means two are used for proprietary signaling purposes and the third is used for standard voice/data traffic. If two full T1s are equipped, two channels from each link are used for signaling and the balance are used for voice/data traffic.

Blocking

Call Blocking occurs when there are more calls than available timeslots. **For ACD sets, plan one timeslot per set**. For non-ACD sets, plan according to usage. See "Timeslot assignment and hold" (page 27), and "Blocking" (page 38).

T1 carrier link compatibility

MCR requires standard DSX-1 Interface (B8ZS clear channel). MCR will support D4 or ESF framing protocols. Channel Service Units (CSUs) will be required at the host and remote sites for each T1 carrier link. These units are customer-provided (in some cases, CSUs are supplied by the T1 providers). The CSU must be configured for no-robbed-bit signaling. If a portion of the twenty-four channels of the first T1 carrier link are used, the

Copyright © 2003-2010 Nortel Networks. All Rights Reserved.

remaining channels can be used with "drop-and-insert" channel banks. Standard T1 test equipment is compatible with MCR because the design supports standard Pulse Code Modulation (PCM) in standard T1 timeslots.

> ***Note:*** Mini-Carrier Remote is not intended for direct connection to the Public Switched Telephone Network or other exposed plant networks. Always connect this product to such networks through a certified (by local, regional, or national safety agency and telecommunications authority), isolating-type network terminating device (such as CSU, DSU, NTI, or NCTE) that provides overvoltage protection.

Telephones supported

Analog (500/2500-type) sets are supported in Normal Mode operation. Analog sets are not supported in ESAM operation.

The digital telephones that are compatible with MCR circuit packs, the LMI and LMX cards, are:

- M2006
- M2008
- M2008HF
- M2216
- M2317
- M2616
- M2250
- M3901
- M3902
- M3903
- M3904
- M3905

The following table shows the support for the digital phones in the normal mode and ESAM, starting with firmware load 12.01:

Table 7
Digital Telephone Mode Support as of Release 12.01

Phone Type	Normal Mode	ESAM
M2006	Yes	Yes
M2008	Yes	Yes
M2008HF	Yes	Yes

Copyright © 2003-2010 Nortel Networks. All Rights Reserved.

Table 7
Digital Telephone Mode Support as of Release 12.01 (cont'd.)

Phone Type	Normal Mode	ESAM
M2009	Yes	Not Supported
M2018	Yes	Not Supported
M2112	Yes	Not Supported
M2216	Yes	Yes
M2317	Yes	Not Supported
M2616	Yes	Yes
M2250	Yes	Yes
M3901	All phases	All phases
M3902	All phases	All phases
M3903	All phases	All phases
M3904	All phases	All phases
M3905	All phases	All phases

System CPU/real time impact

MCR consumes the same real time as if remote IPE cards were used in an IPE shelf at the host site. This means the real impact is calculated as if the cards were located at the host site.

System serial data access

Each LMI and RMI card allows a TTY-type terminal to be connected for communicating with the MMI processor on the LMI or RMI card or the system processor in the local system through a standard SDI interface.

Mechanical overview

The LMI and LMX packs have an information bus between the boards in a mother/daughterboard configuration. The daughterboard is used to provide access to the second card slot. The two circuit packs will mount with five stand-offs, using strip connectors similar to those on the XPEC.

The RMI pack is a single-width card with the same LEDs as the LMI.

Local-site cabling

The LMI uses standard IPE and two new cables, the LMI Multi-I/O cable assembly (NT5D85, Figure 5 "LMI Multi-I/O cable assembly (NT5D85)" (page 21)) and the LMI/LMX Multi-I/O cable assembly (NT5D86, Figure 6 "LMI/LMX Multi-I/O cable assembly (NT5D86)" (page 22)). Figure 8 "Cabling for a single Local Mini-carrier Interface card (LMI)" (page 41) shows LMI cabling connections required at the local site.

Copyright © 2003-2010 Nortel Networks. All Rights Reserved.

Figure 8
Cabling for a single Local Mini-carrier Interface card (LMI)

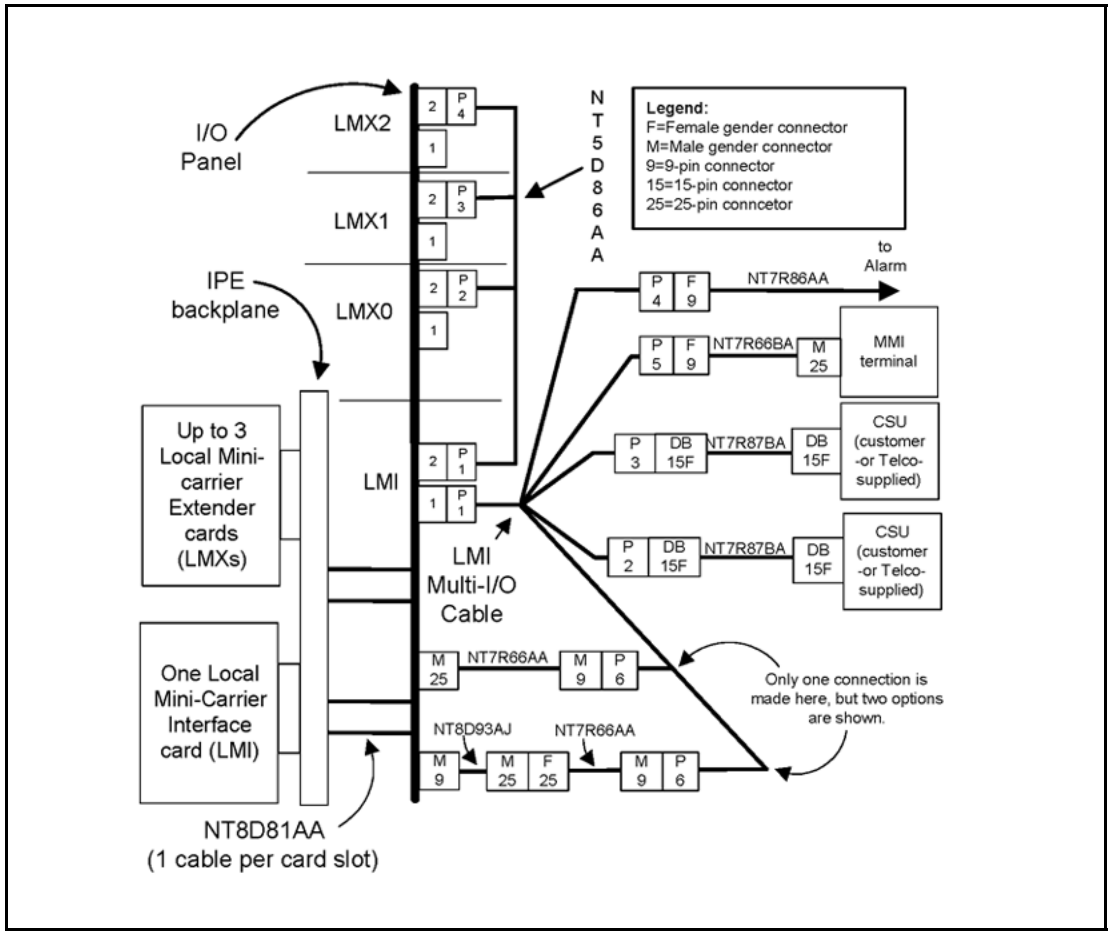

Note: This is an example configuration. **The exact arrangement of cards may vary.** This illustration is to show the proper connections for the cables in your MCR system.

Cabling a daisy chain

Figure 9 "Cabling Local Mini-carrier Interface cards (LMIs) in a daisy chain" (page 42) shows the cabling connections required when as many as 32 LMIs are put in a daisy chain at the local site.

Copyright © 2003-2010 Nortel Networks. All Rights Reserved.

Figure 9
Cabling Local Mini-carrier Interface cards (LMIs) in a daisy chain

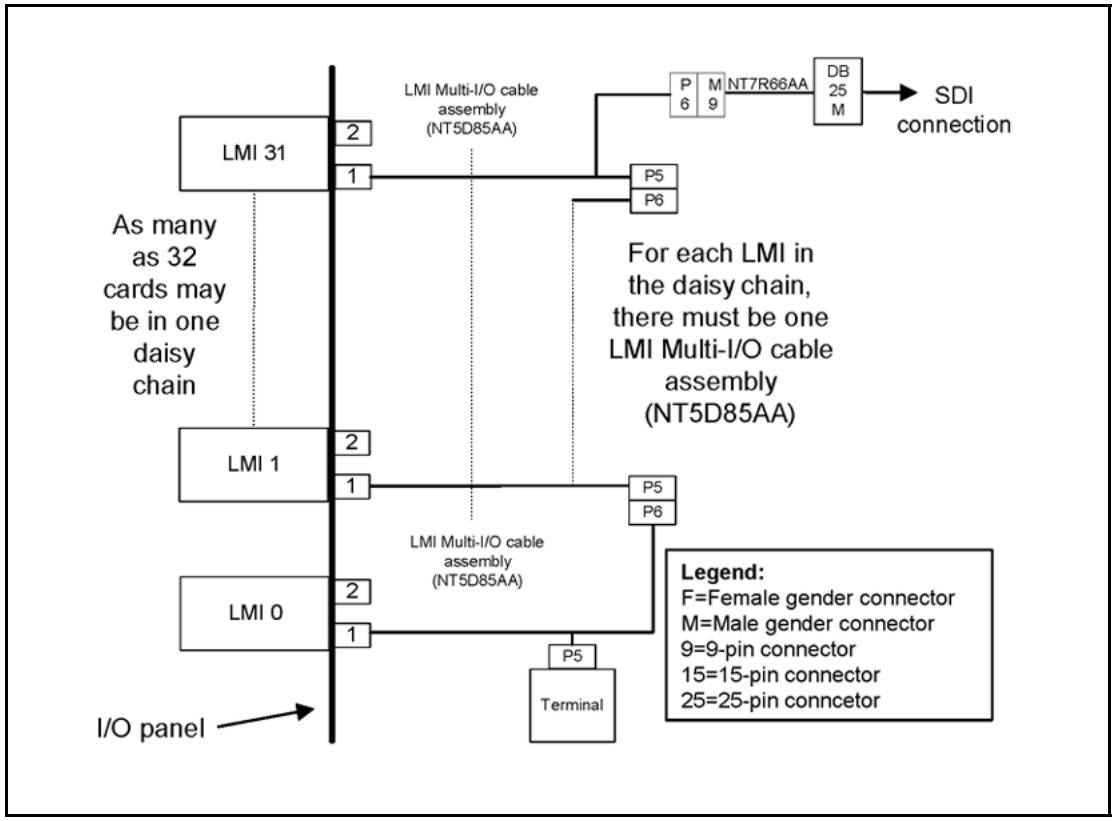

Remote-site cabling

Figure 10 "Remote Mini-carrier Interface cabling" (page 43) shows the RMI cabling connections required at the remote site.

Copyright © 2003-2010 Nortel Networks. All Rights Reserved.

Figure 10
Remote Mini-carrier Interface cabling

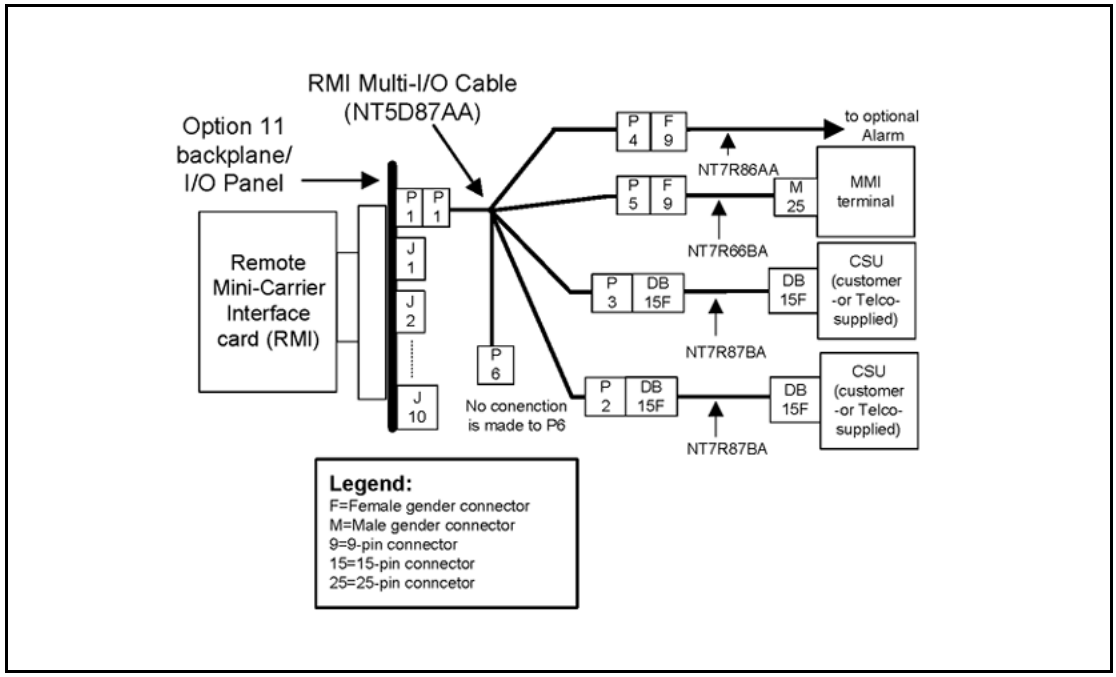

Power requirement

The power requirement for both the LMI and RMI is 1 amp.

Environmental requirements

The following sections describe the environmental, regulatory, and reliability capabilities of the LMI, LMX, and RMI circuit packs.

Operating and storage considerations

The LMI, RMI, and LMX circuit packs can withstand the following environmental conditions without any performance degradation or damage. In this section, the phrase "short term" means 72 consecutive hours with a maximum of 15 days per year. The temperatures are for the environment of the pack, not the total system.

Operating temperature:
Normal: 0ûC to +65ûC 0

Short Term: 0ûC to +70ûC

Operating relative humidity:
Normal: 10% to 95% (non-condensing)

Short Term: 5% to 95% (non-condensing)

Copyright © 2003-2010 Nortel Networks. All Rights Reserved.

Storage

Temperature: -50ûC to +70ûC

Relative Humidity: 5% to 95% (non-condensing)

Temperature cycling

The installed LMI, RMI, and LMX circuit packs withstand and operate normally after three temperature cycles according to IEC 69-2-14, Test Nb. The following conditions apply:

0ûC to 60ûC in 3 minutes for each cycle

Thermal shock

The installed MCR packs withstand and operate normally after 5 cycles of thermal shock. The following conditions apply:

-50ûC to ambient temperature in 3 minutes and +70ûC to ambient in 3 minutes constitutes one cycle.

Duration at -50ûC and at +70ûC shall be 60 minutes.

Duration at ambient temperature shall be 60 minutes.

Shipping and seismic considerations

Mechanical shock - packaged

The packaged LMI, RMI, and LMX circuit packs are not damaged after being dropped from a height of 30 inches on one corner, on three edges, and on all faces, according to NTSA, project 1A.

Mechanical shock - unpackaged (servicing)

The LMI, RMI, and LMX circuit packs retain full functionality after being dropped, as described in TR-EOP-000063(NEBS) under the following conditions:

From a 30û tilt onto all faces and corners

Mechanical shock - transportation bounce

The packaged LMI, RMI, and LMX circuit packs retain full functionality after bounce testing according to IEC 68-2-29, Test Eb under the following conditions:

Constant acceleration of 1.2 g

Duration of 30 minutes per surface

Copyright © 2003-2010 Nortel Networks. All Rights Reserved.

Vibration resonance search

The LMI, RMI, and LMX circuit packs retain full functionality after the vibrational resonance search according to IEC 69-2-6, Test Fc under the following conditions:

Constant acceleration of 0.1g.

Frequency swept manually from 5 Hz to 200 Hz.

Repeated for each of the three mutually perpendicular axes.

Excessive resonance has been investigated to ensure that no damage or degradation in performance will occur.

Vibration endurance - operational

The MCR circuit packs retain full functionality while subject to the vibration endurance test according to IEC 68-206, Test Fc, when configured in the fourth cube of a local system. The following conditions apply:

Constant acceleration of 0.1g

Frequency swept automatically from 5 Hz to 200 Hz at the rate of one octave per minute

Repeated for 2 hours on each of the three mutually perpendicular axes

Vibration endurance - transportation (packaged)

The MCR circuit packs retain full functionality after vibration endurance testing according to IEC 68-2-6, Test Fc under the following conditions:

Frequency swept automatically from 5 Hz to 100 Hz at the rate of one octave per minute with a constant acceleration of 0.5 g, repeated for 30 minutes on each of the three mutually perpendicular axes.

Frequency swept automatically from 100 Hz to 200 Hz at the rate of one octave per minute with a constant acceleration of 1.5 g, repeated for 30 minutes on each of the three mutually perpendicular axes.

Vibration endurance - earthquake

The MCR circuit packs retain full functionality after the earthquake test specified by Bellcore NEBS(TR-EOP 000063) for Zone 4, upper floor.

Electromagnetic compatibility

The LMI, RMI, and LMX circuit packs do not interfere with operation of other licensed communication systems.

Copyright © 2003-2010 Nortel Networks. All Rights Reserved.

The LMI, RMI, and LMX circuit packs do not adversely effect the compliance of the system to Class A of FCC Part 15 Subpart B.

Electromagnetic immunity

The LMI, RMI, and LMX circuit packs resist electromagnetic interference and comply with FCC regulations. These circuit packs perform correctly when subjected to narrow band, radiated fields in a frequency range between 500 kHz and 1 GHz (field strength up to 5 V/m, 1 kHz, 50% modulated AM signal). The MCR circuit packs conform to EN500082-1 and IEC 801 standards for EMC immunity.

Electrostatic discharge

The LMI, RMI, and LMX circuit packs are immune to electrostatic discharges typical for an office environment (carpeted floors, low humidity) using the test method specified by IEC 801-2.

The LMI, RMI, and LMX circuit packs withstand, without malfunction, a direct discharge of up to +/-15 kV (to user accessible surface and face plate).

No damage or malfunction occurs at up to +/- 20 kV of direct discharge. An indirect discharge of up to +/- 20 kV does not result in malfunction of the system (to adjacent equipment or connected cabling).

Safety requirements

- Underwriters Laboratory (UL): The MCR circuit packs comply with and are recognized under UL 1950, third edition.
- Canadian Standards Association (CSA): The MCR circuit packs comply with and are certified under CSA C22.2, No. 225 and No. 950-95.

Copyright © 2003-2010 Nortel Networks. All Rights Reserved.

Installation and configuration

Contents

This section contains information on the following topics:

"Installation overview" (page 47)

"Quick reference to system installation" (page 48)

"System installation" (page 50)

"System configuration" (page 67)

"Host MMI interface" (page 69)

"Verifying mini-carrier links at the remote site" (page 96)

Installation overview

This section describes the installation of Mini-Carrier Remote (MCR) as an integral part of a CS 1000M, CS 1000S, or Meridian 1system.

> ***Note:*** Local-site installations are similar for all options. However, local sites require LMI and LMX cards which are different from cards for all other options.

The MCR facilities can be added to an existing system by installing the appropriate MCR equipment at the local site, installing one or more RMIs at different remote sites, and linking the local site with those remote sites using T1 carrier links. MCR service can also be an integral part of a newly installed system.

To install a new system or expand an existing one, see *Communication Server 1000M and Meridian 1 Large System Installation and Commissioning* (NN43021-310) and *Communication Server 1000M and Meridian 1 Small System Installation and Commissioning* (NN43011-310). These documents describe how to install, verify, and maintain CS 1000 and Meridian 1 systems.

Copyright © 2003-2010 Nortel Networks. All Rights Reserved.

Adding one or more MCR sites to a system is treated as a straightforward system expansion; that is, the system should be fully operational before the MCR equipment is installed and connected to the system. This simplifies installation and fault isolation during installation.

General preinstallation and installation procedures are listed below.

Preinstallation procedures at both the local and remote sites include:

- ordering T1 service from your telephone company,
- preparing the site,
- unpacking and inspecting the equipment, and
- taking inventory of the MCR and system equipment.

Local site installation procedures include:

- selecting line card slots for the Local Mini-carrier Interface card (LMI) and the Local Mini-carrier Extender card(s) [LMX(s)],
- installing the LMI and LMX(s) into the selected line card slots,
- connecting the host SDI and the MMI terminal cables to the LMI Multi I/O cable assembly,
- connecting the LMI/LMX Multi-I/O cable assembly, and
- connecting the T1 carrier link(s) to the LMI Multi-I/O cable assembly.

Remote site installation procedures include:

- installing the cabinet, if not currently installed,
- installing the Remote Mini-carrier Interface card (RMI) into the cabinet controller card slot,
- installing the RMI Multi I/O cable assembly at the connector immediately below the RMI, and
- connecting the MMI terminal and T1 carrier link(s) to the RMI Multi I/O cable assembly.

Quick reference to system installation

Basic familiarity with system operation and general system installation practices is required for MCR installation.

Local site

- Take inventory of the MCR equipment by comparing the received equipment against the shipping documents. Refer to Table 8

Copyright © 2003-2010 Nortel Networks. All Rights Reserved.

"Mini-Carrier Remote-unique hardware list" (page 51) for MCR component part numbers and descriptions.

- Configure the NT5D64 (NT5D68 for cabinet systems) LMI DIP switches to set the appropriate card address and other parameters. For help, refer to:
  - Table 9 "LMI SW2 at U23 functions" (page 56) (U23),
  - Table 10 "LMI SW3 at U51 functions" (page 57) (U51), and
  - Table 12 "LMI standard (default) switch settings" (page 58).
- Install the LMI into two adjacent line card slots.
- Connect the NT5D85 LMI Multi I/O cable to the 50-pin Amphenol connector for the *first* of the two line card slots occupied by the LMI.
- Connect Plug 1 of the NT5D86 LMI/LMX cable assembly to the 50-pin Amphenol connector for the *second* of the two line card slots occupied by the LMI.
- Install the local MMI terminal, and mini-carrier link cables to the LMI Multi I/O cable assembly.
- Configure the NT5D65 (NT5D69) LMX DIP switches to set the appropriate card address. For help, refer to Table 14 "LMX DIP SW2 function: LMX address" (page 61).
- Install the LMX(s) into two consecutive line card slots **in the same IPE shelf (or cabinet) as the LMI.**
- Connect Plug 2 of the NT5D86 LMI/LMX cable assembly to the 50-pin Amphenol connector for the *second* of the two line card slots occupied by LMX 1. (The 50-pin Amphenol connector for the first of the two line card slots is not used.)
- Connect Plug 3 of the NT5D86 LMI/LMX cable assembly to the 50-pin Amphenol connector for the *second* of the two line card slots occupied by LMX 2. (The 50-pin Amphenol connector for the first of the two line card slots is not used.)
- Connect Plug 4 of the NT5D86 LMI/LMX cable assembly to the 50-pin Amphenol connector for the *second* of the two line card slots occupied by LMX 3. (The 50-pin Amphenol connector for the first of the two line card slots is not used.)

Remote site

- Take inventory of MCR equipment by comparing the received equipment against the shipping documents. Refer to Table 8

Copyright © 2003-2010 Nortel Networks. All Rights Reserved.

"Mini-Carrier Remote-unique hardware list" (page 51) for MCR component part numbers and descriptions.

- Install the cabinet, if not already installed. Refer to “Installing the MCR cabinet” (page 62).
- Configure the RMI, NT5D67. Refer to “Configuring the remote MMI terminal port” (page 67).
- Install the RMI into the **CPU** card slot in the cabinet.
- Install the power supply.
- Install the line cards.
- Connect the NT5D87 RMI Multi I/O cable assembly to the cabinet connector directly below the RMI.
- Connect the T1 carrier links and MMI terminal to the RMI Multi I/O cable assembly. Refer to Figure 10 "Remote Mini-carrier Interface cabling" (page 43) for the RMI cabling diagram.
- Connect the subscriber loops to the appropriate line card connectors.

System installation

Preinstallation preparation

Preinstallation preparation consists of preparing the sites, unpacking and inspection, taking inventory, selecting the line card slots for the LMI and LMX(s), selecting the T1 carrier link(s), and preparing the remote site cables, grounding, power source, and the space for the remote cabinet.

Preparing the sites

When preparing a site, you must address environmental, structural, and electrical factors. These factors must be considered for the entire system (that is, local and MCR sites). This information is available in *Communication Server 1000M and Meridian 1 Large System Planning and Engineering* (NN43021-220) and *Communication Server 1000M and Meridian 1 Small System Planning and Engineering* (NN43011-220).

To prepare the system for MCR installation, you must first install and verify the operation of the local system, without linking to the MCR sites. Refer to *Communication Server 1000M and Meridian 1 Large System Installation and Commissioning* (NN43021-310) and *Communication Server 1000M and Meridian 1 Small System Installation and Commissioning* (NN43011-310).

Copyright © 2003-2010 Nortel Networks. All Rights Reserved.

Unpacking and inspection

Unpack and inspect the equipment for damage. When unpacking, follow general precautions recommended by computer and telephone equipment manufacturers:

- Remove items that generate static charge from the installation site.
- Use antistatic spray if the site is carpeted.
- Ground yourself using a wrist strap and an antistatic mat before handling any equipment.
- Remove equipment carefully from its packaging.
- Visually inspect the equipment for obvious faults or damage. Any damaged component must be reported to your sales representative and the carrier who delivered the equipment.
- Hold the plug-in cards by their nonconductor edges and keep them in their antistatic bags until you are ready to install them.
- Do not stack the plug-in cards on top of each other.

Taking inventory

After the equipment has been unpacked and visually inspected, verify that all the equipment is at the site before the installation begins. Refer to Table 8 "Mini-Carrier Remote-unique hardware list" (page 51). Check equipment received against the shipping documents. Note any shortages and report them to your sales representative.

Table 8
Mini-Carrier Remote-unique hardware list

Component	Description
LMI (IPE) NT5D64	Local Mini-carrier Interface card (LMI) for installation in IPE shelf line card slots.
LMX (IPE) NT5D65	Local Mini-carrier Extender card (LMX) for installation in IPE shelf line card slots. Up to three LMXs may be installed, depending on configuration.
RMI NT5D67	Remote Mini-carrier Interface card (RMI) for installation in remote site cabinets.

Copyright © 2003-2010 Nortel Networks. All Rights Reserved.

Table 8
Mini-Carrier Remote-unique hardware list (cont'd.)

Component	Description
LMI NT5D68	Local Mini-carrier Interface card (LMI) for installation in cabinet line card slots.
LMX NT5D69	Local Mini-carrier Extender card (LMX) for installation in cabinet line card slots. Up to three LMXs may be installed, depending on configuration.
LMI Multi-I/O Cable Assembly NT5D85	This 2 foot cable has a 50-pin Amphenol connector at one end that fits the I/O connector for the *first* of the two line card slots occupied by the LMI. The opposite end has five connectors (see Figure 5 "LMI Multi-I/O cable assembly (NT5D85)" (page 21)). The five connectors are for: 1. P2 First T1 carrier link 2. P3 Second T1 carrier link 3. P4 External alarm 4. P5 Man-Machine Interface (MMI) 5. P6 Serial Data Interface (SDI)
LMI/LMX Multi-I/O Cable Assembly NT5D86	This 2 foot cable has a 50-pin Amphenol connector at one end that fits the I/O connector for the second of the two line card slots occupied by the LMI. The opposite end has three connectors, which are for: • P2 LMX1 • P3 LMX 2 • P4 LMX3 (See Figure 6 "LMI/LMX Multi-I/O cable assembly (NT5D86)" (page 22).)
RMI Multi-I/O Cable Assembly NT5D87	This 2 foot cable has a 50-pin Amphenol connector at one end that fits the I/O connector for the controller slot occupied by the RMI. The opposite end has five connectors, which are for: 1. First T1 carrier link 2. Second T1 carrier link 3. External alarm 4. Man-Machine Interface (MMI) 5. (not used) (See Figure 7 "RMI Multi-I/O Cable Assembly (NT5D87)" (page 23).)

Copyright © 2003-2010 Nortel Networks. All Rights Reserved.

Table 8
Mini-Carrier Remote-unique hardware list (cont'd.)

Component	Description
SDI Cable Kit NT7R66AA	This cable kit provides: 1 cable (10-foot, DB-9 male to DB-25 male) 1 adapter (DB-25F/DB-25F) 4 standoffs (0.125L, #6, round, nylon) 4 rivets (0.125 dia., 0.25 head) At the local site, use this cable to connect the standard SDI card to the male DB-9 connector (P5) of the NT5D85 LMI Multi-I/O Cable Assembly. ***Note:*** The DB-25F/DB-25F is not used.
MMI Cable Kit NT7R66BA	This cable kit provides: 1 cable (32-foot, DB-9 female to DB-25 male) 1 adapter (null-modem, DB25 male to DB25 female) 2 labels (2 in. X 1.473 in., white, self-laminating) At the local site, use this cable to connect the MMI terminal to the DB-9 male P5 connector of the NT5D85 LMI Multi I/O cable assembly. At the remote site, use this cable to connect the MMI terminal to the DB-9 male P5 connector of the LMI Multi-I/O cable assembly (NT5D85).
T1 CSU Cable Kit (Two per span) NT7R87BA	This cable kit provides: 1 cable (32-foot, RJ48 to RJ48) 1 cable (sub-assembly, T1/CSU RJ48 to RJ48) 1 adapter (CPE to network, male DB15 to RJ48, NT7R93AA) 1 adapter (CPE to network, female DB15 to RJ48, NT7R93BA) 1 adapter (CPE to CPE, female DB15 to RJ48, NT7R93CA) 1 label (2 in. X 1.473 in., white, self-laminating)

Copyright © 2003-2010 Nortel Networks. All Rights Reserved.

Table 8
Mini-Carrier Remote-unique hardware list (cont'd.)

Component	Description
	At the local site, the NT7R93BA adapter is used to connect to P2 and/or P3 (depending on the number of T1s in use) of the NT5D85 LMI Multi-I/O Cable Assembly to the CSU/DSU. NT7R93AA may be required for this connection, depending on equipment-type. At the remote site, the NT7R93BA adapter is used to connect to P2 and/or P3 (depending on the number of T1s in use) of the NT5D85 LMI Multi-I/O Cable Assembly to the CSU/DSU. NT7R93AA may be required for this connection, depending on equipment-type. ***Note:*** The NT7R93CA adapter is only necessary for connection with the NT7R93BA adapter in a direct-cable connection that does not use T1, thus not using a CSU/DSU.

Routing T1 carrier links to the MCR sites

A T1 carrier link terminates in a operating company demarcation point. From the operating company demarcation point, T1 carrier links are routed to the MCR cards. The distance between MCR and the CSU, the T1 line build-out, should not exceed 200 m (655 feet). Therefore, MCR installations should be located within 200 m of their respective operating company demarcation points and the first repeater boxes. The actual distance is DIP-switch selectable on the LMIs and RMIs.

> ***Note 1:*** The NT7R87BA T1 CSU Cable Kit provided with the MCR equipment is used to connect the LMIs and RMIs to operating company demarcation points (CSUs) at a distance of 32 feet (9.75 m). Install this cable kit, if applicable, between the CSU and the LMI at the local site and the RMI at the remote site as a preinstallation procedure.
>
> ***Note 2:*** Mini-Carrier Remote is not intended for direct connection to the public switched network or other exposed plant networks. Always connect this product to such networks through a certified (by local, regional, or national safety agency and telecommunications authority), isolating type network terminating device (such as CSU, DSU, NT1, or NCTE) that provides overvoltage protection.

Route twisted-pair wires for T1 carrier links from the operating company demarcation point to the MCR equipment. Use standard cable routing procedures to prevent cable exposure to possible damage from contact with machine and human traffic. Terminate the twisted-pair wires with an 8-pin modular plug.

Copyright © 2003-2010 Nortel Networks. All Rights Reserved.

Local site installation

- Install and verify the operation of the local system, if not already installed and operating correctly.
- Identify the line card slots and install the LMI and LMXs in the system. (The LMI and LMXs must all be in the same IPE shelf or cabinet.)
- Install the LMI/LMX cable.
- Connect the LMI Multi-I/O cable assembly (NT5D85) to the SDI and MMI ports, and the T1 carrier links.

Installing the LMI

The LMI can be installed when the system is powered up and running. Table 12 "LMI standard (default) switch settings" (page 58), lists the default (factory provided) switch settings on the LMI. Verify the switch settings before installation.

WARNING
DO NOT ALTER JUMPER SETTINGS!
The jumpers at J3 determine board type and ***should never be removed or changed.*** Refer to Figure 11 "Jumper settings on MCR circuit packs." (page 55) for the proper settings for these jumpers.

Figure 11
Jumper settings on MCR circuit packs.

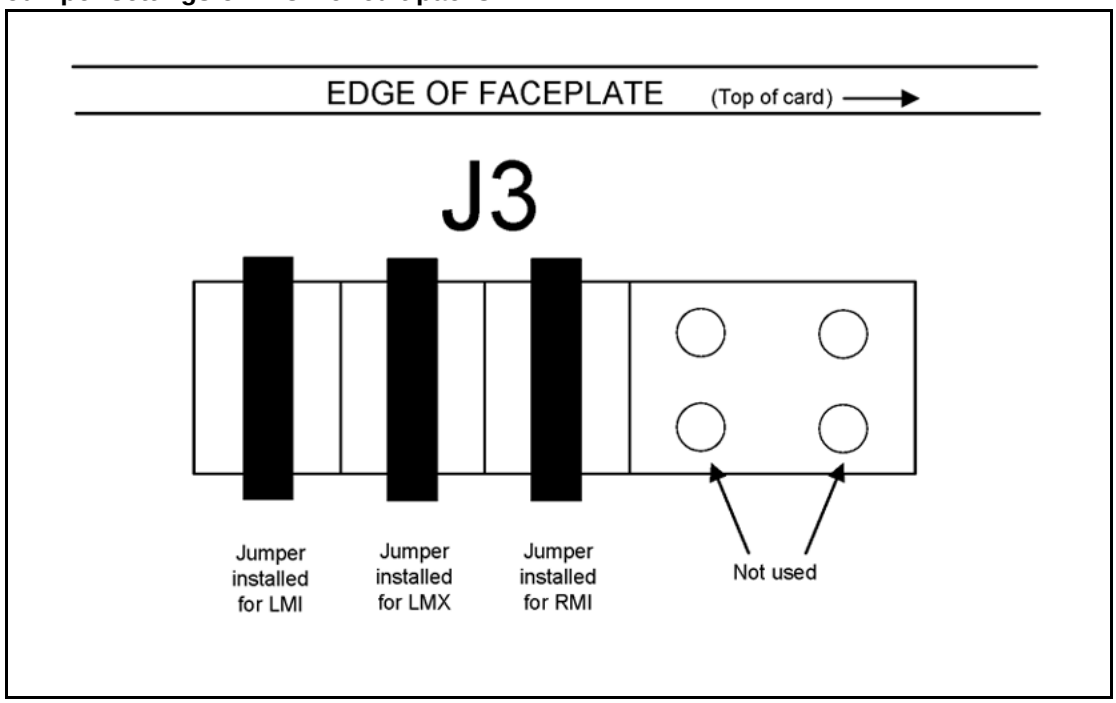

Copyright © 2003-2010 Nortel Networks. All Rights Reserved.

Procedure 1
Installing the LMI

Step	Action
1	Set the DIP switches to specify the distance to the CSU, the MMI terminal baud, and the daisy-chain address. The DIP switch settings outlined in Table 9 "LMI SW2 at U23 functions" (page 56) and Table 10 "LMI SW3 at U51 functions" (page 57) will depend on the physical system configuration.
2	Pull the LMI locking devices away from the faceplate. Holding the card by these locking devices, insert it into the card guides of the selected line card slots.
3	Slide the card into the module until it engages in the backplane connector.
4	Carefully push the locking device levers toward the faceplate to insert the card connector into the backplane connector and lock the card in place.
5	The card LED should blink three times and then stay on until enabled by software. When enabled by software, the card LED turns off permanently, as long as the card is operational.

--End--

Table 9 "LMI SW2 at U23 functions" (page 56) shows the functions of LMI DIP switch 2 (SW2) at each position:

Table 9
LMI SW2 at U23 functions

Position	Usage
1-5	Binary daisy chain address
6	OFF (not used)
7	OFF = MMI End, ON = Not MMI end
8	OFF = SDI End, ON = Not SDI end

Each position's default is OFF. All boards are shipped configured for a single-board system, not daisy chained, where the board is physically connected to both the MMI and SDI. All boards must be specifically addressed to be a part of a daisy chain.

MMI end and SDI end

For daisy chains with more than two LMIs, all cards *not* on the ends must have DIP Switch 2 (SW2), positions 7 and 8, ON. In cases in which there are three LMIs in the daisy chain, LMI 1 and LMI 3 are end cards, each of

Copyright © 2003-2010 Nortel Networks. All Rights Reserved.

which have the special function of providing connectivity to the MMI and SDI, respectively, for the daisy chain. Card 1 is the card at the MMI end, providing connectivity to the MMI, and must keep SW2, Position 7, OFF. Card 3 is at the SDI end, providing connectivity to the SDI, and must keep SW2, Position 8, OFF.

LMI 2, in cases such as the above, is an *intermediate card*, connected to neither the SDI end nor the MMI end. In daisy chains of more than two cards, all intermediate cards must have both Positions 7 and 8 of SW2 ON for the system to function properly.

Table 10 "LMI SW3 at U51 functions" (page 57) shows the function of LMI SW3 at each position:

Table 10
LMI SW3 at U51 functions

Position	Usage
1-3	T1 line build-out
4	framing mode: ESF = OFF, D4 = ON
5	baud 9600 = OFF, 2400 = ON
6	terminal settings: N,8,1 = OFF, M, 7, 1 = ON
7-8	not used

Table 11 "T1 Line Build-Out table" (page 57) shows the settings for SW3, positions 1-3 to set various T1 Line Build-out lengths:

Table 11
T1 Line Build-Out table

	SW3 DIP switch positions (1 = ON, 0 = OFF)		
LENGTH	**1**	**2**	**3**
534 – 655 feet	0	0	0
400 – 533 feet	0	0	1
267 – 399 feet	0	1	0
134 – 266 feet	0	1	1
0 – 133 feet	1	0	0

The default switch settings are all OFF except SW3 position 1, which is ON. These settings correspond to a T1 Line Build-Out of shortest length and ESF framing mode. The MMI and SDI connections run at 9600 baud and default to no parity, 8 data bits, and 1 stop bit (N, 8, 1).

Note: Both T1s are set to the same cable distance and framing mode.

Copyright © 2003-2010 Nortel Networks. All Rights Reserved.

Table 12 "LMI standard (default) switch settings" (page 58) lists the default settings for each LMI DIP switch position:

Table 12
LMI standard (default) switch settings

Switch	Switch positions							
	1	**2**	**3**	**4**	**5**	**6**	**7**	**8**
SW2 @ U23	OFF	OFF	OFF	OFF	OFF	OFF	OFF	OFF
SW3 @ U51	ON	OFF	OFF	OFF	OFF	OFF	OFF	OFF

Table 13 "LMI maintenance daisy chain addresses" (page 58) lists all possible addresses for an LMI. The card's address is set with switch SW2 (at U23), positions 1 through 6. The address is used to identify a specific LMI in a daisy chain configuration.

Table 13
LMI maintenance daisy chain addresses

LMI Address	SW2 at U23 positions 1-5 (1 = ON, 0 = OFF)				
	1	**2**	**3**	**4**	**5**
0	0	0	0	0	0
1	1	0	0	0	0
2	0	1	0	0	0
3	1	1	0	0	0
4	0	0	1	0	0
5	1	0	1	0	0
6	0	1	1	0	0
7	1	1	1	0	0
8	0	0	0	1	0
9	1	0	0	1	0
10	0	1	0	1	0
11	1	1	0	1	0
12	0	0	1	1	0
13	1	0	1	1	0
14	0	1	1	1	0
15	1	1	1	1	0
16	0	0	0	0	1
17	1	0	0	0	1
18	0	1	0	0	1
19	1	1	0	0	1

Copyright © 2003-2010 Nortel Networks. All Rights Reserved.

Table 13
LMI maintenance daisy chain addresses (cont'd.)

LMI Address	SW2 at U23 positions 1-5 (1 = ON, 0 = OFF)				
	1	2	3	4	5
20	0	0	1	0	1
21	1	0	1	0	1
22	0	1	1	0	1
23	1	1	1	0	1
24	0	0	0	1	1
25	1	0	0	1	1
26	0	1	0	1	1
27	1	1	0	1	1
28	0	0	1	1	1
29	1	0	1	1	1
30	0	1	1	1	1
31	1	1	1	1	1

Procedure 2
Connecting cable assemblies to the LMI

Step	Action
1	Connect P1 of the NT5D85 LMI Multi I/O cable, to the 50-pin Amphenol connector for the *first* of the two line card slots occupied by the LMI (see Figure 5 "LMI Multi-I/O cable assembly (NT5D85)" (page 21)).
2	Connect P1 of the NT5D86 LMI/LMX multi-I/O cable assembly to the 50-pin Amphenol connector for the *second* of the two line card slots occupied by the LMI (see Figure 6 "LMI/LMX Multi-I/O cable assembly (NT5D86)" (page 22)).
3	Refer to the following when installing the NT7R87BA T1 CSU cable kit to connect the T1 carriers from the LMI or RMI to the CSU. • Connect the NT7R93BA adapter to P2 (carrier 0) or P3 (carrier 1) of the LMI or RMI I/O cable. • Connect the 32' span cable to the NT7R93BA adapter. • If your CSU terminates to an RJ45 connector, directly connect the other end of the span cable to the CSU. • If your CSU terminates to a DB15 connector, connect the NT7R93AA adapter to the CSU and connect the span cable to the adapter.

Copyright © 2003-2010 Nortel Networks. All Rights Reserved.

CAUTION
For proper operation of the Mini-Carrier equipment, the following settings should be verified:

- Line build-out switches are set to accommodate a cable length that corresponds to the approximate length to the CSU
- CSU is configured for the same framing format as the MCR (D4 or ESF)
- CSU is NOT configured for robbed-bit signaling
- CSU accepts B8ZS zero-substitution codes

Unused carrier links should be configured as "unequipped" (using the set configuration command from the Man Machine interface terminal), to avoid a constant alarm condition. The alarm relay contacts will remain active during such an alarm condition.

4 Install the local MMI terminal and T1 carrier link cables to the LMI Multi I/O cable assembly. See Figure 8 "Cabling for a single Local Mini-carrier Interface card (LMI)" (page 41) for an illustration of the cable connections necessary for a single LMI system. For an illustration of the cable connections necessary to daisy chain the LMI's terminal connection, see Figure 9 "Cabling Local Mini-carrier Interface cards (LMIs) in a daisy chain" (page 42).

a For single-LMI systems, SW2 positions 7 and 8 are OFF. See Table 9 "LMI SW2 at U23 functions" (page 56).

b For daisy-chained systems, the LMI connected to the terminal should have SW2 position 7 OFF and SW2 position 8 ON. The LMI connected to the SDI port should have SW2 position 8 OFF and SW2 position 7 ON. The LMIs in the middle of the daisy chain, those not on the MMI end or the SDI end, should have SW2, positions 7 and 8 ON. See "MMI end and SDI end" (page 56) and Table 10 "LMI SW3 at U51 functions" (page 57) for brief instructions on how to properly set DIP switches for daisy chaining.

--End--

Installing the LMX

Configure the NT5D65 LMX DIP switches for the appropriate card address (see Table 14 "LMX DIP SW2 function: LMX address" (page 61)). Switch 3 (SW3) is reserved and all positions should be OFF.

Copyright © 2003-2010 Nortel Networks. All Rights Reserved.

Table 14
LMX DIP SW2 function: LMX address

Position (1 = ON, 0 = OFF)		
1	**2**	**LMX Number**
0	0	LMX 0
1	0	LMX 1
0	1	LMX 2

Install the LMX into two consecutive line card slots in the same shelf or cabinet as the LMI.

WARNING
DO NOT ALTER JUMPER SETTINGS!
The jumpers at J3 determine board-type and ***should never be removed or changed.*** Refer to Figure 11 "Jumper settings on MCR circuit packs." (page 55) for the proper settings for these jumpers.

Procedure 3
Connecting the LMI/LMX cable assembly

Step	Action
1	Connect Plug 1 of the LMI/LMX cable assembly (NT5D86) to the 50-pin Amphenol connector for the *second* of two slots for the LMI (see Figure 6 "LMI/LMX Multi-I/O cable assembly (NT5D86)" (page 22)).
2	Connect Plug 2 of the LMI/LMX cable assembly to the 50-pin Amphenol connector for the *second* of the two line card slots occupied by LMX 1. ***Note:*** The 50-pin Amphenol connector for the first of the two line card slots is not used.
3	In the same way, connect Plug 3 of the NT5D86 LMI/LMX cable assembly to the 50-pin Amphenol connector for the *second* of the two line card slots occupied by LMX 2.
4	Finally, connect Plug 4 of the NT5D86 LMI/LMX cable assembly to the 50-pin Amphenol connector for the *second* of the two line card slots occupied by LMX 3. (See Figure 8 "Cabling for a single Local Mini-carrier Interface card (LMI)" (page 41).)

--End--

Copyright © 2003-2010 Nortel Networks. All Rights Reserved.

Remote site installation

Installing the MCR cabinet

To install a cabinet for MCR, locate and prepare the wall area for the wall-mounted installation, install the cabinet, connect the ground wires, and connect the power. When selecting the wall area for the cabinet installation, make sure you provide for convenient MCR and subscriber loop cable routing.

Procedure 4
Installing the MCR Cabinet

Step	Action
	To complete these tasks, follow the steps below:
1	Unpack and inspect the cabinet.
2	Level and install the mounting bracket on the wall.
3	Remove the front cover and all cards from the cabinet to make the cabinet lighter and to prevent card damage in case the cabinet drops during the installation process.
4	Position the cabinet over the mounting bracket so that the bracket hook engages the slot at the rear of the cabinet. The slot is located at the top center of the cabinet.
5	Secure the cabinet to the wall by using two wood screws at the lower front of the cabinet.
6	Install the 6 AWG copper ground wire between the approved building ground and the ground lug at the bottom of the cabinet.
7	Install the power supply in the *Pwr Sup* slot and turn the power switch to OFF.
8	At the building ground end of the wire, use two fastening clamps to connect the wire to the building ground, insulate the connection with electric tape, and post a "DO NOT DISCONNECT" tag.
9	Disconnect the building ground wire at the ground lug on the cabinet and measure the resistance between the tip of the disconnected ground wire and the ground lug on the cabinet. If the resistance is more than 5 ohms, check the building ground and the ground terminal at the AC wall outlet where the cabinet power cord is connected.
10	For an AC system, connect the NTAK98AA Power Cord from the NTAK04 AC/DC power supply to the commercial AC power outlet. For a DC system, connect the NTAK05 DC power converter cord to the DC power source over the NTAK28AA Junction Box and the NTAK0410 power cable.

Copyright © 2003-2010 Nortel Networks. All Rights Reserved.

11	Measure the ground resistance between the ground lug at the bottom of the NTAK11BA cabinet and the ground prong on the cabinet power cord. It should measure 0 ohms. If the resistance is greater than 0 ohms, check the ground terminal on the power supply power connector for continuity to the cabinet.
12	Disconnect the power cord from the wall outlet for the AC system or the DC power source for the DC system and reconnect the 6 AWG ground wire to the cabinet ground lug.
13	Reconnect the NTAK98AA supply power cord to the AC power outlet for an AC system or to the DC source for a DC system.

--End--

This completes the cabinet installation and system ground test. You can now install the plug-in cards.

Installing cards into the remote cabinet

The following steps show you how and where to install the NT5D67 RMI and other cards in the remote cabinet. This document provides step-by-step card installation, which should be followed when additional cards are installed or defective cards are replaced.

WARNING
DO NOT ALTER JUMPER SETTINGS!
The jumpers at J3 determine board-type and ***should never be removed or changed.*** Refer to Figure 11 "Jumper settings on MCR circuit packs." (page 55) for the proper settings for these jumpers.

Procedure 5
Installing cards into the remote cabinet

Step	Action
1	Set the DIP switches on the NT5D67 RMI to specify the distance to the first repeater, framing mode, MMI terminal baud, and the system terminal settings. See Table 16 "RMI SW3 functions" (page 65). (All defaults are OFF.) The DIP switch setting will depend on the physical system configuration.
2	Pull the RMI locking devices away from the faceplate. Holding the card by these locking devices, insert it into the card guides in the card slot marked *CPU*, which is located in slot 0.
3	Slide the card into the module until it engages the backplane connector.
4	Push the locking device levers toward the faceplate to insert the card connector into the backplane connector and lock the card in place.

Copyright © 2003-2010 Nortel Networks. All Rights Reserved.

5 Observe the LED on the card as it performs self-tests. The LED should blink three times and then stay on until enabled by software. When enabled by software, the LED turns off if card is operational.

6 Install line cards in slots 1 through 8.

   a Install the local MMI terminal and T1 carrier link cables to the RMI Multi-I/O Cable Assembly (NT5D87). See Figure 10 "Remote Mini-carrier Interface cabling" (page 43).

   b Pull the card locking devices away from the faceplate and insert the card into the card guides of a line card slot.

   c Slide the card into the module until it engages the backplane connector and then push the locking device levers toward the faceplate to insert the card connector into the backplane connector and lock the card in place.

7 Repeat step 6 for each line card.

8 Refer to the following when installing the NT7R87BA T1 CSU cable kit to connect the T1 carriers from the LMI and RMI to the CSU:

   - Connect the NT7R93BA adapter to P2 (carrier 0) or P3 (carrier 1) of the LMI or RMI I/O cable.
   - Connect the 32’ span cable to the NT7R93BA adapter.
   - If your CSU terminates to an RJ45 connector, directly connect the other end of the span cable to the CSU.
   - If your CSU terminates to a DB15 connector, connect the NT7R93AA adapter to the CSU and connect the span cable to the adapter.

   For proper operation of the Mini-Carrier equipment, the following should be verified:

   - line build-out switches are set to accommodate a cable length that corresponds to the approximate length to the CSU
   - CSU is configured for the same framing format as the MCR (D4 or ESF)
   - CSU is **not** configured for robbed-bit signaling
   - CSU accepts B8ZS zero substitution codes

   Unused carrier links should be configured as "unequipped" (using the set configuration command from the Man Machine Interface terminal), to avoid a constant alarm condition. The alarm relay contacts will remain active during such an alarm condition.

Copyright © 2003-2010 Nortel Networks. All Rights Reserved.

9 Install the local MMI terminal and T1 carrier link cables to the LMI Multi I/O cable assembly (see Figure 5 "LMI Multi-I/O cable assembly (NT5D85)" (page 21)).

> ***Note:*** Before connecting the T1 carrier link to the system, the connection between the operating company demarcation point, such as a CSU, should have been completed using the NT7R87BA T1 CSU Cable Kit.

10 Connect the female DB-9 end of the NT7R66BA (MMI Cable Kit) to P5 of the RMI Multi-I/O Cable Assembly (NT5D87).

--End--

The following tables show RMI DIP switch functions:

Table 15
RMI SW2 functions

Position	Usage
1-8	reserved — OFF

Table 16
RMI SW3 functions

Position	Usage
1-3	T1 line build-out
4	framing mode: ESF = OFF, D4 = ON
5	baud 9600 = OFF, 2400 = ON
6	terminal settings: N,8,1 = OFF, M, 7, 1 = ON
7-8	not used — OFF

Table 17 "T1 Line Build-out Table" (page 65) shows the settings for RMI DIP switch 3, positions 1-3, to set various T1 Line Build-out lengths:

Table 17
T1 Line Build-out Table

	RMI SW3 Position (1 = ON, 0 = OFF)		
LENGTH	**1**	**2**	**3**
534 – 655 feet	0	0	0
400 – 533 feet	0	0	1
267 – 399 feet	0	1	0
134 – 266 feet	0	1	1
0 – 133 feet	1	0	0

Copyright © 2003-2010 Nortel Networks. All Rights Reserved.

Defaults are SW3, position 1 ON and all others OFF, which corresponds to a T1 Line Build-Out of shortest length and ESF framing mode. The MMI and SDI connections run at 9600 baud and default to N,8,1.

Note: Both T1s are set to the same cable distance and framing mode.

Connecting T1 carrier links to the MCR

In an MCR system, the T1 carrier links are routed to the cabinet and connected to the RMI through the RMI Multi-I/O Cable Assembly (NT5D87) from the operating company demarcation point.

Note: Before connecting the T1 carrier link to the system, the connection between the operating company demarcation point, such as a CSU, is completed using the NT7R87BA T1 CSU Cable Kit.

Using the MMI command **`SET SPAN (S S)`**, program the number of T1 channels supplied by your service provider. Refer to "**`SET SPAN (S S)`**" (page 95) for a detailed description of this process.

Procedure 6
Main distribution frame connections

Step	Action
	Connect subscriber loop (tip and ring) cables to the cabinet. Use 50-pin connectors J1 through J10. These cables have already been connected to the Main Distribution Frame (MDF) in the preinstallation preparation phase according to the instructions in Communication Server 1000M and Meridian 1 Large System Installation and Commissioning (NN43021-310) *and Communication Server 1000M and Meridian 1 Small System Installation and Commissioning* (NN43011-310)*:*
1	Remove the locking bar from connectors designated J1 through J10.
2	Install the 50-pin connector terminating the MDF cable marked J1 and plug it into the connector at the bottom of the cabinet also designated J1.
3	Repeat step 2 for the remaining MDF cables from J2 through J10 for card slot 1 through 9.
4	Replace the locking bar(s) in the cabinet(s) over the cable connectors.
	--End--

Power supply for MCR

The cabinet can be powered with an AC power system using the NTAK04 AC/DC power supply. It can also be powered with a DC power system using the NTAK05 DC power supply from a –52 V battery source through

Copyright © 2003-2010 Nortel Networks. All Rights Reserved.

the NTAK28AA Junction box and the NTAK0410 power cable. Before you install the power supply into the cabinet, set switches SW1 through SW4. Table 18 "NTAK04 AC/DC and NTAK05 DC power supply switch settings" (page 67) lists the appropriate switch settings.

Table 18
NTAK04 AC/DC and NTAK05 DC power supply switch settings

Voltage	SW1	SW2	SW3	SW4
Message Waiting; -150 V	ON			
Message Waiting; -120 V	OFF			
Ringing; 86 Vrms		OFF	OFF	OFF
Ringing; 80 Vrms		ON	OFF	OFF
Ringing; 75 Vrms		OFF	ON	OFF
Ringing; 70 Vrms		OFF	OFF	ON

Note: Ringing frequency selection is made with a three-way switch located to the left of the 4-position DIP switch at the top of the power supply. The typical North American setting is -150 V, 86 Vrms, and 20 Hz.

System configuration

The configuration and administration of the MCR at the local site are identical to the standard system configuration and administration and do not require special considerations.

However, there are some initial setup functions that must be considered at the local and the remote sites. These functions are administered over the MMI port connected to a terminal or a TTY at the local or remote site.

Configuring the remote MMI terminal port

The MMI port can be configured in the SDI or the MMI mode. When the MMI terminal is in the SDI mode, you can perform system administration tasks from the local or the remote site. When the MMI terminal is in the MMI mode, you can:

- perform mini-carrier functions such as display status, logs, performance information, history, and messages,
- enable or disable alarms,
- clear errors and logs,
- set performance parameters, and
- specify tests.

Copyright © 2003-2010 Nortel Networks. All Rights Reserved.

Host SDI mode

In the Host SDI mode, a terminal is connected to the MMI port (P5 on the RMI Multi I/O cable) at the RMI. This terminal becomes the system maintenance and service change TTY. At the local site, the LMI connects to the MMI port (P5 on the LMI Multi I/O cable) and to an SDI port (P6 on the LMI Multi I/O cable) of an SDI card.

For the MMI port at the RMI to be able to communicate over the SDI port connected to the LMI, the interface characteristics must be the same:

- Speed is set at the factory to 9600 bps, but is DIP switch configurable to 2400 bps using SW3, position 5.
- Parity, character width, and stop bit are configured using SW3, position 6:
  - OFF = parity-None, character width-8, stop bit-1 (N, 8, 1)
  - ON = parity-Mark, character width-7, stop bit-1 (M, 7, 1)

In this mode, the remote TTY or terminal becomes a system TTY that can access overlays and perform system configuration, maintenance, and diagnostics, which are the same functions performed by the local system TTY. Refer to Table 24 "MMI commands" (page 115) for a listing of all available MMI commands and the definition of each.

To log in to the host for SDI operation, you should first log in using the MMI terminal in the MMI mode, then you should log into the terminal as host:

Table 19
MMI commands for SDI operation

Command Line	Description
MCR>L	Login command
Enter Password > **MCRLINK**	Enter the system password.
MCR::>	Prompt after logging in
MCR::> **HOS**	To access the Host SDI mode
Enter Password > **HOST**	Enter the SDI password

The Host SDI mode is accessed from the MMI mode by entering the **HOST (HO)** command at the terminal or TTY. In this mode you can configure and maintain the entire system. For example, LD 45 can be activated to perform loopback testing.

To exit this mode, enter **@@@**.

Copyright © 2003-2010 Nortel Networks. All Rights Reserved.

MMI mode

In the MMI mode, a terminal, or TTY, is connected to the local MMI port (P5 on the LMI Multi I/O cable) at the LMI or at the remote MMI port (P5 on the RMI Multi I/O cable) at the RMI. The MMI interface characteristics are based on the following switch settings:

Table 20
Default MMI characteristics (LMI and RMI SW3)

Setting	Position 5	Position 6
OFF	9600	no parity, 8 data bits, and 1 stop bit
ON	2400	mark parity, 7 data bits, and 1 stop bit

- Speed is configured using SW3 position 5:
  - OFF = 9600 bps or
  - ON = 2400 bps.
- Parity, character width, and stop bit are configured using SW3, position 6:
  - OFF = parity-None, character width-8, stop bit-1 (N, 8, 1) or
  - ON = parity-Mark, character width-7, stop bit-1 (M, 7, 1).

Host MMI interface

An RS-232 Man Machine Interface (MMI) communication port is provided for maintenance, configuration, and diagnostics. To begin working at the MMI, type L. MCR then prompts the user for a password that, if entered correctly, will allow the user to interface with the MCR.

Table 21 "MMI commands" (page 69), lists the MMI commands available at the Mini-Carrier Remote MMI interface with a brief description of each:

Table 21
MMI commands

Command	Description
A D	**Alarm Disable** — Disables all local and remote carrier alarms. Maintenance LED lit.
A E	**Alarm Enable** — Enables all local and remote carrier alarms.
C A	**Clear Alarm** — Clears all local and remote carrier alarms.
C A L	**Clear Alarm Log** — Clears near-end alarm log.
C A L D	**Clear Alarm Log Distant** — Clears distant-end alarm log.

Copyright © 2003-2010 Nortel Networks. All Rights Reserved.

Table 21
MMI commands (cont'd.)

Command	Description
C E	**Clear Error** — Clears near-end error counters for all carriers.
C E D	**Clear Error Distant** — Clears distant-end error counters for all carriers.
C M	**Clear Memory** — Restores all configuration settings on the near-end card to their original default values.
C M D	**Clear Memory Distant** — Restores all configuration settings on the distant-end card to their original default values.
D A	**Display Alarm Log** — Displays near-end alarm log.
D A D	**Display Alarm Log Distant** — Displays distant-end alarm log.
D B	**Display Block** — Displays the call blocking statistics when voice calls were unable to get T1 timeslots on the near end.
D B D	**Display Block Distant** — Displays the call blocking statistics when voice calls were unable to get T1 timeslots on the far end.
D C	**Display Configuration** — Displays current configuration of the near-end mini-carrier interface cards.
D C D	**Display Configuration Distant** — Displays current configuration of the distant-end mini-carrier interface cards.
D H	**Display History** — Displays near-end performance counters for a specified carrier for the last 24 hours.
D H D	**Display History Distant** — Displays distant-end performance counters for a specified carrier for the last 24 hours.
D M	**Display Map** — Displays the in-service or out-of-service (I or O) status of all channels on both T1 spans at the near end.
D M D	**Display Map Distant** — Displays the in-service or out-of-service (I or O) status of all channels on both T1 spans at the distant end.
D P	**Display Performance** — Displays near-end performance counters for the specified carrier during the past hour.
D P D	**Display Performance Distant** — Displays distant-end performance counters for the specified carrier during the past hour.
D S	**Display Status** — Displays the status of the carriers on the near-end.
D S D	**Display Status Distant** — Displays the status of the carriers on the distant end.
E	**Emergency Stand-Alone Mode** — Displays current ESAM status and available ESAM setting options.
E A	**Emergency Stand-alone Mode, Auto** — Causes the specified card to operate in the Emergency Stand-Alone Mode automatically when two channels go into alarm.
E F	**Emergency Stand-alone Mode, Force** — Causes the specified card to operate in the Emergency Stand-Alone Mode at all times.

Copyright © 2003-2010 Nortel Networks. All Rights Reserved.

Table 21
MMI commands (cont'd.)

Command	Description
E N	**Emergency Stand-alone Mode, Never** — Disables the specified card's ability to operate in the Emergency Stand-Alone Mode.
E S	**Emergency Stand-alone Mode, Save** — Reserved for future use.
HE or ?	**Help** — Displays the help screen.
HO	**Host** — Connects to the SDI port. The password is **HOST**. (@@@ terminates the connection. See "@@@" entry, below.)
L	**Login** — Logs into the MMI terminal when the system has one Mini-Carrier Interface card. The password is **MCRLINK**. If logged in, typing L and an incorrect password will log out the user from MCR MMI system.
L xx	**Login** (**daisychain address)** — Logs into the specified card when the system has multiple Mini-Carrier Interface cards daisy-chained in the network module. The password is **MCRLINK**.
P D	**Provision Download** — Downloads provisioning data stored in the near-end's Flash module.
P D	**Provision Download Distant** — Downloads provisioning data stored in the near-end card's Flash module to the far-end card's Flash module.
P R	**Provision Refresh** — Ensures that the LMI and RMI RAM contain all the provisioning data from every card in the system.
P U	**Provision Upload** — Updates a provisioning file to the near-end card's FMM from the terminal.
P U D	**Provision Upload Distant** — Updates a provisioning file to the near-end card's FMM from the far-end card's FMM.
Q	**Quit** — Logs out the terminal user.
S A	**Set Alarm** — Allows user to set carrier alarm threshold and duration parameters.
S C	**Set Configuration** — Allows user to equip or unequip the link.
S D	**Set Date** — Allows user to set or verify the date currently maintained by near-end mini-carrier interface cards.
S D	**Set Date Distant** — Allows user to set or verify the date currently maintained by distant-end mini-carrier interface cards.
S E	**Set ESAM** — Allows user to configure the parameters of the Emergency Stand-Alone Mode.
S N	**Set Name** — Allows user to set the site name.
S S	**Set Span** — Allows user to set the number of timeslots used by the T1.
S T	**Set Time** — Allows user to set or verify the time currently maintained by near-end mini-carrier interface cards.

Copyright © 2003-2010 Nortel Networks. All Rights Reserved.

Table 21
MMI commands (cont'd.)

Command	Description
S T D	**Set Time Distant** — Allows user to set or verify the time currently maintained by distant-end mini-carrier interface cards.
@@@	Terminates the terminal connection to the host.
T	**Test** — Allows user to select 1 of 5 tests to be run on the specified carrier link.
T D	**Test Distant** — Allows user to select 1 of 5 tests to be run on the specified carrier link at the distant end.
T V	**Test Verbose** — Instructs system to display error reports while tests of specified carrier link at the near end are in progress.

MMI login

Each MCR must be configured individually, even if the MCR resides in a daisy-chain configuration. To configure the MMI firmware for MCR, you must login to that particular MCR. Passwords must be upper case. All other commands are not case-sensitive.

- For single MCR installations, log in by typing L or LOGIN.
- For MCRs in a daisy-chain configuration, log-in by typing **L <XX>** or **LOGIN <XX>,** where **XX** is the two-digit decimal address of the MCR set by the DIP switches. The command **LOGIN** and the address must be separated by a space. For example, to log in to an MCR with an address of 31, enter the command **L 31** or **LOGIN 31.** All MCR addresses must be two digits. For example, an MCR with an address of 1, should be entered as 01.

MMI password

After logging in, you will be prompted to enter a password. The password is **MCRLINK.** The MMI command line prompt in the initial mode is **MCR>,** but, after entering the password correctly, the prompt will look as follows:

- **MCR::>** for single MCR installations
- **MCRXX>** for MCRs installed in a daisy chain xx represents the two-digit decimal MCR address.

After three unsuccessful password attempts, the user will be logged out.

MMI logout

To log out of the MMI, type **Q.**

Copyright © 2003-2010 Nortel Networks. All Rights Reserved.

Basic MMI commands

Most MMI commands may be executed by typing the first letter of each word in the command separated by a space. Should two or more commands begin with the same letter, type as many letters as it takes to differentiate one command from another. The user may simply enter the entire command to avoid confusion. The commands are not case-sensitive EXCEPT for the MMI password (MCRLINK). The basic commands are:

- ALARM (A)
- CLEAR (C)
- DISPLAY (D)
- ESAM (E)
- HELP (HE)
- HOST (HOS)
- PROVISION (P)
- SET (S)
- TEST (T)
- QUIT (Q)
- @@@

An in-depth discussion of these commands follows, along with an example of the on-screen response generated by each. Our discussion will begin with the **HELP** command, which generates a listing of the nine basic commands:

HELP (HE, ?)

If you enter **?**, MMI will list available commands along with an explanation of their usage. The help screen can be made to appear by entering **?**, **HE**, or **HELP**. Entering any of these commands causes a screen similar to the following to appear:

Copyright © 2003-2010 Nortel Networks. All Rights Reserved.

Figure 12
HELP (H) screen

```
MCR::>he

ALARM    USAGE: Alarm [Enable | Disable]
CLEAR    USAGE: Clear [Alarm | Error | Alarm Log | Memory] [Dist]
DISPLAY  USAGE: Disp [Alarm | Block | Config | Status | Perf |
        Hist | Map] [Dist]
ESAM     USAGE: Esam [Save | Force | Never | Auto]
HELP     USAGE: HElp | ?
HOST     USAGE: HOSt    (@@@ to Terminate)
SET      USAGE: Set [Time | Date | Alarm | Config | Name | Esam | Span]
TEST     USAGE: Test [Verbose] [Distant]
FIRMWARE USAGE: Upload [Dist|Auto] | Download Rmi|Lmi|1|2|3|Autho
       Boot [Rmi|Lmi|1|2|3|Auto], Erase [Rmi|Lmi|1|2|3|Auto]
PROVISION USAGE: Upload [Dist] | Download [Dist] | Refresh
QUIT     USAGE: Quit

Notation Used:
CAPS - Required Letters    [] - Optional    | - Either/Or
```

Note: The FIRMWARE and ESAM SAVE commands are reserved for future use.

ALARM [ENABLE | DISABLE]

ALARM ENABLE (A E)

This command allows MCR to activate system alarm relay output to respond to any active alarm condition. Its display is similar to Figure 13 "ALARM ENABLE (A E) screen" (page 74).

Figure 13
ALARM ENABLE (A E) screen

```
MCR::>a e
Alarms Enabled
MCR::>
```

ALARM DISABLE (A D)

This command will prevent the MCR system from asserting its alarm relay output while in alarm mode. Its display is similar to Figure 14 "ALARM DISABLE (A D) screen" (page 74).

Figure 14
ALARM DISABLE (A D) screen

```
MCR::>a d
Alarms Disabled
MCR::>
```


Copyright © 2003-2010 Nortel Networks. All Rights Reserved.

The default for system alarms is ALARMS ENABLED. To take advantage of the alarms provided, be sure alarms are enabled during normal operation.

CLEAR [ALARM | ERROR | ALARM LOG | MEMORY] [DIST]

The **CLEAR** commands allow the user to reset various system notification and record-keeping devices to the default level. The commands are described in alphabetic order.

CLEAR ALARM (C A)

This command resets MCR's alarm indicator to all-systems normal. Its display is similar to Figure 15 "CLEAR ALARM (C A) screen" (page 75).

Figure 15
CLEAR ALARM (C A) screen

```
MCR::>c a
Alarm Acknowledged
MCR::>
```

CLEAR ALARM LOG (C A L)

This command removes all entries from MCR's near-end alarm log. Its display is similar to Figure 16 "CLEAR ALARM LOG (C A L) screen" (page 75).

Figure 16
CLEAR ALARM LOG (C A L) screen

```
MCR::>c a l
Alarm Log Cleared
MCR::>
```

CLEAR ALARM LOG DISTANT (C A L D)

This command removes all entries from MCR's distant-end alarm log. Its display is similar to Figure 16 "CLEAR ALARM LOG (C A L) screen" (page 75).

CLEAR ERROR (C E)

This command resets MCR's near-end error counter to zero. Its display is similar to Figure 17 "CLEAR ERROR (C E) screen" (page 76).

Copyright © 2003-2010 Nortel Networks. All Rights Reserved.

Figure 17
CLEAR ERROR (C E) screen

```
MCR::>c e
Error Counter Cleared
MCR::>
```

CLEAR ERROR DISTANT (C E D)
This command resets MCR's distant-end error counter to zero. Its display is similar to Figure 17 "CLEAR ERROR (C E) screen" (page 76).

CLEAR MEMORY (C M)
This command restores all near-end configuration settings to their default values. Its display is similar to Figure 18 "CLEAR MEMORY (C M) screen" (page 76).

Figure 18
CLEAR MEMORY (C M) screen

```
MCR::>c m
Defaults Restored
MCR::>
```

The command erases and tests the card's entire Flash memory. Firmware and provisioning information are destroyed.

When this command is executed, the Flash Memory status is displayed in Table 22 "Flash Memory status" (page 76).

Table 22
Flash Memory status

Status	Description
Good	Flash Memory passed test and has a good checksum.
Bad	Flash memory has a bad checksum or a read-back value that was different from the memory write value. This happens if the Flash is bad, or if the card was interrupted while saving. You can still test Flash memory and attempt to upload and download. If a memory test or save is successful (Provision Erase, Clear Memory commands), the flash memory status may change back from Bad to Good.
Not Detected	Flash memory failed the initial write/read-back sequence and is either not responding or is not installed.
Unknown	Flash memory on that card is not running the version 12.00 firmware or above. You can check this by noting the firmware version in the Display Configuration command response. The card's running firmware version will read "A Pre-12.00 Version".

Copyright © 2003-2010 Nortel Networks. All Rights Reserved.

CLEAR MEMORY DISTANT (C M D)

This command restores all distant-end configuration settings to their default values. Its display is similar to Figure 18 "CLEAR MEMORY (C M) screen" (page 76).

The command erases and tests the card's entire Flash memory. Firmware and provisioning information are destroyed.

DISPLAY [ALARM | BLOCK | CONFIG | STATUS | PERFORMANCE | HIST | MAP] [DIST]

The **DISPLAY** commands list the condition of various aspects of the MCR system at the time the command is issued. The commands are described in alphabetic order.

DISPLAY ALARM LOG (D A)

This command displays the contents of the near-end alarm log. Its display is similar to Figure 19 "DISPLAY ALARM (D A) screen" (page 77).

Figure 19
DISPLAY ALARM (D A) screen

```
MCR::>d a

Alarm Log
02/05/98  10:56:38 Log Cleared
MCR::>
```

DISPLAY ALARM LOG DISTANT (D A D)

This command displays the contents of the distant-end alarm log. Its display is similar to Figure 19 "DISPLAY ALARM (D A) screen" (page 77).

DISPLAY BLOCK (D B)

This command displays the statistics related to the blocking of voice calls on the near end due to the unavailability of T1 timeslots. Its display is similar to Figure 20 "DISPLAY BLOCK (D B) screen" (page 77).

Figure 20
DISPLAY BLOCK (D B) screen

```
MCR::>d b
Blocked Call Count (since last query = 0
All Time Slots in-use Count (since last query) = 0
Total Span Time Slots Avalable = 44
Number of Time Slots currently in use = 0
Maximum Time Slots in use (since last query) = 0
MCR::>
```


Copyright © 2003-2010 Nortel Networks. All Rights Reserved.

DISPLAY BLOCK DISTANT (D B D)

This command displays the statistics related to the blocking of voice calls on the far end due to the unavailability of T1 timeslots. Its display is similar to Figure 20 "DISPLAY BLOCK (D B) screen" (page 77).

DISPLAY CONFIG (D C)

This command displays the near-end mini-carrier interface card's configuration settings. Its display is similar to Figure 21 "DISPLAY CONFIG (D C) screen" (page 78).

Figure 21
DISPLAY CONFIG (D C) screen

```
MCR::>d c
MCR S/N  Firmware Version V6.1C 14:56:17 03/17/98
Local Site

Alarms Enabled: YES
Link 0 Equipped
Link 1 Equipped

Alarm Level 1 Threshold Value E-5   Threshold Duration (in seconds) 10
Alarm Level 2 Threshold Value E-4   Threshold Duration (in seconds) 10
Frame Slips Alarm Level Threshold 100  Threshold Duration (in minutes) 2

Dip Switch S2 (U23) Settings (S1..S8) OFF OFF OFF OFF OFF OFF OFF OFF
Dip Switch S3 (U51) Settings (S1..S8) ON  OFF OFF OFF OFF OFF OFF OFF
MCR::>
```

When this command is executed, the Flash Memory status is displayed as follows:

Good	Flash Memory passed test and has a good checksum
Bad	Flash memory has a bad checksum or a read-back value that was different from the memory write value. This happens if the Flash is bad, or if the card was interrupted while saving. You can still test Flash memory and attempt to upload and download. If a memory test or save is successful (Provision Erase, Clear Memory commands), the flash memory status may change back from Bad to Good.
Not Detected	Flash memory failed the initial write/read-back sequence and is either not responding or is not installed.
Unknown	Flash memory on that card is not running 12.00 version firmware or above. You can check this by noting the firmware version in the Display Configuration command response. The card's running firmware version will read "A Pre-12.00 Version".

Copyright © 2003-2010 Nortel Networks. All Rights Reserved.

DISPLAY CONFIG DISTANT (D C D)

This command displays the distant-end mini-carrier interface card's configuration settings. Its display is similar to Figure 21 "DISPLAY CONFIG (D C) screen" (page 78).

DISPLAY HISTORY (D H)

This command shows the performance of the selected near-end mini-carrier remote interface card over the previous 24-hour period. Its display is similar to Figure 22 "DISPLAY HISTORY (D H) screen" (page 79).

Figure 22
DISPLAY HISTORY (D H) screen

```
MCR::>d h
Which Carrier? (0-1):0
            MCR Interface History Performance Log
                      For Carrier Number 0
                         01:17:52 02/06/98
 Hour   Errored   Bursty   Unavailable  Loss Frame  Frame Slip   Error
Ending  Seconds   Seconds  Seconds      Seconds     Seconds      Counter
 01:00   00000    00000    00000        00000       00000        32768
 00:00   00000    00000    00000        00000       00000        32768
 23:00   00000    00000    00000        00000       00000        32768
 22:00   00000    00000    00000        00000       00000        32768
 21:00   00000    00000    00000        00000       00000        32768
 20:00   00000    00000    00000        00000       00000        32768
 19:00   00000    00000    00000        00000       00000        32768
 18:00   00000    00000    00000        00000       00000        32768
 17:00   00000    00000    00000        00000       00000        32768
 16:00   00000    00000    00000        00000       00000        32768
 15:00   00000    00000    00000        00000       00000        32768
 14:00   00000    00000    00000        00000       00000        32768
 13:00   00000    00000    00000        00000       00000        32768
 12:00   00000    00000    00000        00000       00000        32768
 11:00   00001    00000    00000        00000       00001        32768
 10:00   00000    00000    00000        00000       00000        00000
 09:00   00000    00000    00000        00000       00000        00000
 08:00   00000    00000    00000        00000       00000        00000
 07:00   00000    00000    00000        00000       00000        00000
 06:00   00000    00000    00000        00000       00000        00000
 05:00   00000    00000    00000        00000       00000        00000
 04:00   00000    00000    00000        00000       00000        00000
 03:00   00000    00000    00000        00000       00000        00000
 02:00   00000    00000    00000        00000       00000        00000

MCR::>
```

DISPLAY HISTORY DISTANT (D H D)

This command shows the performance of the selected distant-end mini-carrier remote interface card over the previous 24-hour period. Its display is similar to Figure 22 "DISPLAY HISTORY (D H) screen" (page 79).

Copyright © 2003-2010 Nortel Networks. All Rights Reserved.

DISPLAY MAP (D M)

This command displays the in-service or out-of-service status of all T1 channels in the MCR system. Its display is similar to Figure 23 "DISPLAY MAP (D M) screen" (page 80).

Figure 23
DISPLAY MAP (D M) screen

```
MCR::>d m
Ch     : 0 0 0 0 0 0 0 0 0 1 1 1 1 1 1 1 1 1 1 2 2 2 2 2
         1 2 3 4 5 6 7 8 9 0 1 2 3 4 5 6 7 8 9 0 1 2 3 4
Span 0: S S I I I I I I I I I I I I I I I I I I I I I I
Span 1: S S I I I I I I I I I I I I I I I I I I I I I I

S - Sys     O - OOS     I - INS     C - CONNECT
MCR::>
```

DISPLAY MAP DISTANT (D M D)

This command displays the in-service or out-of-service status of far-end T1 channels in the MCR system. Its display is similar to Figure 23 "DISPLAY MAP (D M) screen" (page 80).

DISPLAY PERFORMANCE (D P)

This command shows the near-end performance of the selected carrier since the top of the hour, or since power-up if the system has yet to be powered at the top of an hour. Its display is similar to Figure 24 "DISPLAY PERFORMANCE (D P) screen" (page 80).

Figure 24
DISPLAY PERFORMANCE (D P) screen

```
MCR::>d p
Which Carrier? (0-1):0
                MCR Interface Performance Log
                     For Carrier Number 0
                      01:17:34 02/06/98

Data for the past 17 minutes
Errored  Bursty   Unavailable  Loss Frame  Frame Slip   Error
Seconds  Seconds  Seconds      Seconds     Seconds      Counter
 00000    00000    00000        00000       00000       32768
MCR::>
```

DISPLAY PERFORMANCE DISTANT (D P D)

This command shows the distant-end performance of the selected carrier since the beginning of the hour, or since power-up if the system has not been powered at the beginning of an hour. Its display is similar to Figure 24 "DISPLAY PERFORMANCE (D P) screen" (page 80).

Copyright © 2003-2010 Nortel Networks. All Rights Reserved.

DISPLAY STATUS (D S)

This command displays the current condition of each link controlled by the near-end mini-carrier interface card. Its display is similar to Figure 25 "DISPLAY STATUS (D S) (at local site) screen" (page 81) or Figure 26 "DISPLAY STATUS (D S) (at remote site) screen" (page 81).

Figure 25
DISPLAY STATUS (D S) (at local site) screen

```
MCR::>d s
MCR S/N  Firmware Version V6.1C 14:56:26 03/17/98
Local Site:

Link  0  Alarm Level 0
Link  1  Alarm Level 0
LMX 0 S/N NNTM1831R0LV F/W V6.1C Status - NORMAL
LMX 1 S/N NNTM1831TE22 F/W V6.1C Status - NORMAL
LMX 2 S/N NNTM1831TE25 F/W V6.1C Status - NORMAL
MCR::>
```

Figure 26
DISPLAY STATUS (D S) (at remote site) screen

```
MCR::>d s
MCR S/N testrmi Firmware Version V6.1D 13:51:01 03/21/98
Remote Site: RMI VERIFICATION

Link  0  Alarm Level 0
Link  1  Alarm Level 0
MCR::>
```

DISPLAY STATUS DISTANT (D S D)

This command displays the current condition of each link controlled by the distant-end mini-carrier interface card. Its display is similar to Figure 25 "DISPLAY STATUS (D S) (at local site) screen" (page 81) or Figure 26 "DISPLAY STATUS (D S) (at remote site) screen" (page 81).

ESAM [SAVE | FORCE | NEVER | AUTO]

The ESAM commands involve the Emergency Stand Alone Mode and how the user wishes it to be invoked. If the user types an **E** and presses **ENTER**, the current ESAM setting and the available settings will be displayed in a screen similar to Figure 27 "ESAM (E) screen" (page 82). The commands are described in alphabetic order.

Note: The ESAM SAVE command is reserved for future use.

Copyright © 2003-2010 Nortel Networks. All Rights Reserved.

Figure 27
ESAM (E) screen

```
MCR::>e
Current ESAM: Auto Mode
ESAM     USAGE: Esam [Save | Force | Never | Auto]
MCR::>
```

ESAM AUTO (E A)

The **ESAM Auto** command instructs MCR to operate in the Emergency Stand-Alone Mode if all carriers go into a level 2 alarm. Its display is similar to Figure 28 "ESAM Auto (E A) screen" (page 82).

Figure 28
ESAM Auto (E A) screen

```
MCR::>e a
MCR::>
```

Note: This configuration setting can be overridden by the faceplate ESAM toggle switch.

ESAM FORCE (E F)

The **ESAM Force** command instructs MCR to operate at all times in the Emergency Stand-Alone Mode. Its display is similar to Figure 29 "ESAM Force (E F) screen" (page 82).

Figure 29
ESAM Force (E F) screen

```
MCR::>e f
MCR::>
```

ESAM NEVER (E N)

The **ESAM Never** command instructs MCR not to operate in the Emergency Stand-Alone Mode. Its display is similar to Figure 30 "ESAM Never (E N) screen" (page 83).

Copyright © 2003-2010 Nortel Networks. All Rights Reserved.

Figure 30
ESAM Never (E N) screen

```
MCR::>e n
MCR::>
```

Note: This configuration setting can be overridden by the faceplate ESAM toggle switch.

FIRMWARE

The FIRMWARE commands are reserved for future use.

PROVISION [UPLOAD [DIST]| DOWNLOAD [DIST] | REFRESH]

The **PROVISION** commands provide backup and restore capabilities for the data stored in the flash memory (FM) or Flash Memory Module (FMM). The commands are described in alphabetic order.

PROVISION DOWNLOAD (P D)

The **Provision Download** command downloads provisioning information stored on the near-end's FM or FMM to a file using XMODEM or XMODEM-1K file transfer. Prior to using this command, the PROVISION REFRESH (P R) command should be performed. The display is similar to Figure 31 "PROVISION DOWNLOAD (P D) screen" (page 83).

Figure 31
PROVISION DOWNLOAD (P D) screen

```
MCR::>p d
You may begin downloading to a file using Xmodem protocol…
MCR::>
```

PROVISION DOWNLOAD DISTANT (P D D)

The Provision Download Distant command downloads provisioning data stored in the near-end card's FMM to the far-end card's FM or FMM. After entering this command, you are prompted for the location to store the information into: RAM, on-board non-volatile ROM (NVROM) or battery backed RAM (BBRAM). Prior to using this command, the PROVISION REFRESH (P R) command should be performed. The display is similar to Figure 31 "PROVISION DOWNLOAD (P D) screen" (page 83).

PROVISION REFRESH (P R)

The **Provision Refresh** command ensures that the LMI and RMI RAM contains all of the provisioning information from every card in the system. This command should be used before the PROVISION DOWNLOAD command. The display is similar to Figure 32 "PROVISION REFRESH (P R) screen" (page 84).

Copyright © 2003-2010 Nortel Networks. All Rights Reserved.

Figure 32
PROVISION REFRESH (P R) screen

```
MCR::>p r
Refreshing MCR System card information...

Refreshing system...
RMI ESAM Config Received
LMI Config sent to RMI
LMX1 link down. Configuration reset.
LMX2 link down. Configuration reset.
LMX3 link down. Configuration reset.
ESAM ESAM Config Received
1-00 ESAM Config Received
1-01 ESAM Config Received
1-02 ESAM Config Received
1-03 ESAM Config Received
1-04 ESAM Config Received
1-05 ESAM Config Received
1-06 ESAM Config Received
1-07 ESAM Config Received
1-08 ESAM Config Received
1-09 ESAM Config Received
1-10 ESAM Config Received
1-11 ESAM Config Received
1-12 ESAM Config Received
1-13 ESAM Config Received
1-14 ESAM Config Received
1-15 ESAM Config Received
Done

08:57:41 03/01/05
MCR Local Site (LMI):
Provisioning last saved by LMI, F/W: d12.00j1F version.
  Site: .  on 03/01/05 at 08:57:31.

RMI  S/N:NNTM1832MXAL F/W:d12.00j1F Active
  EPROM:r12.00i    FLASH:d12.00j1F Status: Good.
  RAM = 512 Kilobyte
  S2: OFF OFF OFF OFF OFF OFF OFF OFF   S3: ON  OFF OFF OFF OFF OFF OFF OFF
LMI  S/N:NNTM1832NTDH F/W:d12.00j1F Active
  EPROM:r12.00i    FLASH:d12.00j1F Status: Good.
  RAM = 512 Kilobyte.
  S2: OFF OFF OFF OFF OFF OFF OFF OFF   S3: ON  OFF OFF OFF OFF OFF OFF OFF
  Alarms Enabled: YES
  Link 0 Equipped  Link 1 Equipped
  Alarm Level 1 Threshold Value E-5   Threshold Duration (in seconds) 10
  Alarm Level 2 Threshold Value E-4   Threshold Duration (in seconds) 10
  Frame Slips Alarm Level Threshold 100  Threshold Duration (in minutes) 2
MCR::>
```

PROVISION UPLOAD (P U)

The **Provision Upload** command instructs the near-end card's FM or FMM to upload the provisioning file from the terminal. The display is similar to Figure 33 "PROVISION UPLOAD (P U) screen" (page 85).

Copyright © 2003-2010 Nortel Networks. All Rights Reserved.

Figure 33
PROVISION UPLOAD (P U) screen

```
MCR::>p u
WARNING: Data may be lost unless you download provisioning first.
Do you wish to back-up the current provisioning? [(Yes)|No]: y
You may begin downloading to a file using Xmodem protocol...

Continuing Provision Upload
Ready to upload Provisioning File to FLASH memory.
Which protocol?  1K-Xmodem (YES) or Xmodem (NO)? [(Yes)|No]: n
Awaiting 128 Byte XMODEM-CRC Upload...  Hit CTRL-X twice to abort
MCR::>
```

PROVISION UPLOAD DISTANT (P U D)

The **Provision Upload Distant** command instructs the near-end card's FM or FMM to upload the provisioning file from the far-end card's FM or FMM. The display is similar to Figure 34 "PROVISION UPLOAD DISTANT (P U D) screen" (page 85).

Figure 34
PROVISION UPLOAD DISTANT (P U D) screen

```
MCR::>p u d
WARNING: Data may be lost unless you download provisioning first.
Do you wish to back-up the current provisioning? [(Yes)|No]: y
You may begin downloading to a file using Xmodem protocol...

Distant-End will overwrite this cards provisioning.  Proceed [Yes|(No)]: y

Refreshing system...
RMI ESAM Config Received
LMI Config sent to RMI
LMX1 link down. Configuration reset.
LMX2 link down. Configuration reset.
LMX3 link down. Configuration reset.
ESAM ESAM Config Received
1-00 ESAM Config Received
1-01 ESAM Config Received
1-02 ESAM Config Received
1-03 ESAM Config Received
1-04 ESAM Config Received
1-05 ESAM Config Received
1-06 ESAM Config Received
1-07 ESAM Config Received
1-08 ESAM Config Received
1-09 ESAM Config Received
1-10 ESAM Config Received
1-11 ESAM Config Received
1-12 ESAM Config Received
1-13 ESAM Config Received
1-14 ESAM Config Received
1-15 ESAM Config Received
Done
MCR::>
```

SET [TIME | DATE | ALARM | CONFIG | NAME | ESAM | SPAN]

The **SET** command configures various properties of the MCR system. The commands are described in alphabetic order.

Copyright © 2003-2010 Nortel Networks. All Rights Reserved.

SET ALARM (S A)

This command configures two properties of MCR's alarm system:

1. the number of errors the system will allow before signaling an alarm — *threshold*
2. the length of time that MCR will signal the alarm — *duration*

The command's display is similar to Figure 35 "SET ALARM (S A) screen" (page 86).

Figure 35
SET ALARM (S A) screen

```
MCR::>s a
Alarm 1 Threshold:  Min - E-3   Max - E-9
      [Current Value - 5] - 5
Threshold Duration (in seconds) Min - 1  Max - 2148
      [Current Value - 10] - 10
Alarm 2 Threshold:  Min - E-3   Max - E-9
      [Current Value - 4] - 4
Threshold Duration (in seconds) Min - 1  Max - 218
      [Current Value - 10] - 10
Frame Slip Threshold (Min - 1  Max - 255)
      [Current Value - 100] - 100
Frame Slip Threshold Duration (in Minutes) Min - 1  Max - 1440
      [Current Value - 2] - 2
MCR::>
```

SET CONFIG (S C)

This command equips or unequips the T1 carriers. Its display is similar to Figure 36 "SET CONFIG (S C) screen" (page 86).

Figure 36
SET CONFIG (S C) screen

```
MCR::>s c
Equip Carrier 0  (YES or NO) Y
Equip Carrier 1  (YES or NO) Y
MCR::>
```

SET DATE (S D)

This command configures the date kept at the near end of the system. Its display is similar to Figure 37 "SET DATE (S D) screen" (page 87).

Copyright © 2003-2010 Nortel Networks. All Rights Reserved.

Figure 37
SET DATE (S D) screen

```
MCR::>s d
Current Date 02/06/98 Fri 2/07/98 Sat
Current Date 02/07/98 Sat
Update distant end site? (YES or NO) Y
MCR::>
```

SET DATE DISTANT (S D D)
This command configures the date kept at the distant end of the system. Its display is similar to Figure 37 "SET DATE (S D) screen" (page 87).

SET ESAM (S E)
This command configures the settings for ESAM protection. Its display is similar to Figure 38 "SET ESAM (S E) screen" (page 87).

Note: ESAM configuration values are stored on the RMI. If the user replaces the RMI for any reason, all values set with the SET ESAM command and all commands on the ESAM setup menu must be reconfigured.

Figure 38
SET ESAM (S E) screen

```
MCR::>s e
ESAM Setup Menu:
1 - System Parameters
2 - Show Slot Parameters
3 - Set Slot Parameters
4 - Phone Parameters
5 - XUT Parameters
6 - Trunk Parameters

8 - Quit (No Save)
9 - End (Save)
```

1. **System Parameters** — This variation of the **SET ESAM** command configures the number of digits in the ESAM directory number for each channel and the trunk access digit, or the number dialed by the user to obtain an outside line. Its display is similar to Figure 39 "SET ESAM:SYSTEM PARAMETERS screen" (page 88).

Copyright © 2003-2010 Nortel Networks. All Rights Reserved.

Figure 39
SET ESAM:SYSTEM PARAMETERS screen

```
MCR::>S E
ESAM Setup Menu:

1 - System Parameters
2 - Show Slot Parameters
3 - Set Slot Parameters
4 - Phone Parameters
5 - XUT Parameters
6 - Trunk Parameters

8 - Quit (No Save)
9 - End (Save)
1
DN Size (2-5) [Current Value - 4]
Trunk Access Digit (0-9) [Current Value - 9]
ESAM Setup Menu:

MCR::>
```

2. **`Show Slot Parameters`** — This variation of the **`SET ESAM`** command shows the type of line card in each slot. Its display is similar to Figure 40 "SET ESAM: SHOW SLOT PARAMETERS screen" (page 88).

Figure 40
SET ESAM: SHOW SLOT PARAMETERS screen

```
Current Cards in System:
Slot 1 Existing Card Type - XDLC
Slot 2 Existing Card Type - None
Slot 3 Existing Card Type - None
Slot 4 Existing Card Type - None
Slot 5 Existing Card Type - None
Slot 6 Existing Card Type - None
Slot 7 Existing Card Type - None
Slot 8 Existing Card Type - XUT
Slot 9 Existing Card Type - None
Slot 10 Existing Card Type - None
ESAM Setup Menu:
1 - System Parameters
2 - Show Slot Parameters
3 - Set Slot Parameters
4 - Phone Parameters
5 - XUT Parameters
6 - Trunk Parameters

8 - Quit (No Save)
9 - End (Save)
```

3. **`Set Slot Parameters`** — This variation of the **`SET ESAM`** command allows the user to change the type of line card in each slot. Its display is similar to Figure 41 "SET ESAM:SET SLOT PARAMETERS screen" (page 89).

Copyright © 2003-2010 Nortel Networks. All Rights Reserved.

Figure 41
SET ESAM:SET SLOT PARAMETERS screen

```
Slot Location Setup Menu:

1 - Change XDLC Slot Location
2 - Change XUT Slot Location

9 - Quit
```

4. **Phone Parameters** — This variation of the **SET ESAM** command allows the user to change the functionality of the telephone on any one of the sixteen ports. Its display is similar to Figure 42 "SET ESAM: PHONE PARAMETERS screen" (page 89).

Figure 42
SET ESAM: PHONE PARAMETERS screen

```
<CR> for port 0, 0-15 for a port or 'E' to exit:0
Reset the phone now to initiate provisioning? [(Yes)|No]: y

Refreshing phone.ESAM Slot-Phone: 1-00 provisioned.
.....................................................Done
Enable Auto Hold [Yes|(No)]: y
Enable Do Not Ring [Yes|(No)]: n

Phone type: M3903

Transfer Key is 17
  First Line Key: 00 DN: 3000
  Second Line Key: has not been detected.
Saving/Updating provisioning.

<CR> for port 1, 0-15 for a port or 'E' to exit:e
```

Note: Upon completion of the phone provisioning the phone must be reset by physically unseating the line cord and then plugging it back in.

5. **XUT Parameters** — This variation of the **SET ESAM** command allows the user to change the XUT parameters. Its display is similar to Figure 43 "SET ESAM: PHONE PARAMETERS: XUT PARAMETERS screen" (page 89).

Figure 43
SET ESAM: PHONE PARAMETERS: XUT PARAMETERS screen

```
XUT Setup Menu for XUT
1 - Companding
2 - 10PPS1 Make/Break Ratio
3 - 10PPS2 Make/Break Ratio
4 - 20PPS Make/Break Ratio

9 - Return To Main Menu
```


Copyright © 2003-2010 Nortel Networks. All Rights Reserved.

a. **Companding** — This variation of the **SET ESAM:XUT PARAMETERS** command allows the user to change the companding setting. The default setting is uLaw. Its display is similar to Figure 44 "SET ESAM: PHONE PARAMETERS: XUT PARAMETERS:COMPANDING screen" (page 90).

Figure 44
SET ESAM: PHONE PARAMETERS: XUT PARAMETERS:COMPANDING screen

```
Enter Compander Type
1 - uLaw, 2 - aLaw, <cr> - No Change
Slot 0 Existing Compander Type - uLaw New Type - 2 Type Now - aLaw
XUT Setup Menu for XUT
1 - Companding
2 - 10PPS1 Make/Break Ratio
3 - 10PPS2 Make/Break Ratio
4 - 20PPS Make/Break Ratio

9 - Return To Main Menu
```

b. **10PPS1 Make/Break Ratio** — This variation of the **SET ESAM:XUT PARAMETERS** command allows the user to change the 10PPS1 Make/Break Ratio from its default of 0. Its display is similar to Figure 45 "SET ESAM: PHONE PARAMETERS: XUT PARAMETERS:10PPSI MAKE/BREAK RATIO screen" (page 90).

Figure 45
SET ESAM: PHONE PARAMETERS: XUT PARAMETERS:10PPSI MAKE/BREAK RATIO screen

```
Enter 10PPS1 Make/Break Ratio [Current Value - 1] - 2
XUT Setup Menu for XUT
1 - Companding
2 - 10PPS1 Make/Break Ratio
3 - 10PPS2 Make/Break Ratio
4 - 20PPS Make/Break Ratio

9 - Return To Main Menu
```

c. **10PPS2 Make/Break Ratio** — This variation of the **SET ESAM:XUT PARAMETERS** command allows the user to change the 10PPS2 Make/Break Ratio from its default of 0. Its display is similar to Figure 46 "SET ESAM: PHONE PARAMETERS: XUT PARAMETERS: 10PPS2 MAKE/BREAK RATIO screen" (page 91).

Copyright © 2003-2010 Nortel Networks. All Rights Reserved.

Figure 46
SET ESAM: PHONE PARAMETERS: XUT PARAMETERS: 10PPS2 MAKE/BREAK RATIO screen

```
Enter 10PPS2 Make/Break Ratio [Current Value - 1] - 2
XUT Setup Menu for XUT
1 - Companding
2 - 10PPS1 Make/Break Ratio
3 - 10PPS2 Make/Break Ratio
4 - 20PPS Make/Break Ratio

9 - Return To Main Menu
```

d. **20PPS Make/Break Ratio** — This variation of the **`SET ESAM:XUT PARAMETERS`** command allows the user to change the 20PPS Make/Break Ratio from its default of 0. Its display is similar to Figure 47 "SET ESAM: PHONE PARAMETERS: XUT PARAMETERS:20PPS MAKE/BREAK RATIO screen" (page 91).

Figure 47
SET ESAM: PHONE PARAMETERS: XUT PARAMETERS:20PPS MAKE/BREAK RATIO screen

```
Enter 20PPS Make/Break Ratio [Current Value - 1] - 2
XUT Setup Menu for XUT
1 - Companding
2 - 10PPS1 Make/Break Ratio
3 - 10PPS2 Make/Break Ratio
4 - 20PPS Make/Break Ratio

9 - Return To Main Menu
```

6. **`Trunk Parameters`** — This variation of the **`SET ESAM`** command allows the user to change the parameters of any of the 8 trunks on the current board. Its display is similar to Figure 48 "SET ESAM: TRUNK PARAMETERS screen" (page 91).

Figure 48
SET ESAM: TRUNK PARAMETERS screen

```
Enter Trunk Number (0-7) - 1
Trunk Setup Menu for Trunk 1:
1 - Trunk Type
2 - Balance Impedance
3 - Termination Impedance
4 - Dialing Speed

9 - Return To Main Menu
```

a. **`Trunk type`** — This variation of the SET ESAM command allows the user to change the trunk type of the selected trunk from its default of "Unknown." Its display is similar to Figure 49 "SET ESAM: TRUNK PARAMETERS: TRUNK TYPE screen" (page 92).

Copyright © 2003-2010 Nortel Networks. All Rights Reserved.

Figure 49
SET ESAM: TRUNK PARAMETERS: TRUNK TYPE screen

```
Enter Trunk Type

1 - Loop Start, 2- Ground Start, 3- DID Delay, 4- DID Immediate, 5- DID Wink, 6- None,
<cr>- No Change
Trunk 0 Existing Type - Unknown New Type -  Type Unchanged
Trunk Setup Menu for Trunk 0:

1 - Trunk Type
2 - Balance Impedance
3 - Termination Impedance
4 - Dialing Speed

9 - Return to Main Menu
```

b. **`Balance Impedance`** — This variation of the SET ESAM command allows the user to change the balance impedance of the trunk from its default of "Complex." Its display is similar to Figure 50 "SET ESAM: TRUNK PARAMETERS: BALANCE IMPEDANCE screen" (page 92).

Figure 50
SET ESAM: TRUNK PARAMETERS: BALANCE IMPEDANCE screen

```
Enter Trunk Balance Impedance
1 - Complex, 2 - 600 ohms, <cr> - No Change
Trunk 0 Existing Balance - Complex New Balance - 2 Balance Now - 600 Ohms
Trunk Setup Menu for Trunk 1:
1 - Trunk Type
2 - Balance Impedance
3 - Termination Impedance
4 - Dialing Speed

9 - Return To Main Menu
```

c. **`Termination Impedance`** — This variation of the SET ESAM command allows the user to change the termination impedance of the trunk from its default of 600 ohms. Its display is similar to Figure 51 "SET ESAM: TRUNK PARAMETERS: TERMINATION IMPEDANCE screen:" (page 93).

Copyright © 2003-2010 Nortel Networks. All Rights Reserved.

Figure 51
SET ESAM: TRUNK PARAMETERS: TERMINATION IMPEDANCE screen:

```
Enter Trunk Termination Impedance
1 - 600 ohms, 2 -900 ohms, 3 - 1200 ohms, <cr> - No Change
Trunk 0 Existing Termination - Complex New Termination -  Termination Unchanged
Trunk Setup Menu for Trunk 1:
1 - Trunk Type
2 - Balance Impedance
3 - Termination Impedance
4 - Dialing Speed

9 - Return To Main Menu
```

d. **`Dialing Speed`** — This variation of the SET ESAM command allows the user to change the dialing speed of the trunk, from its default of "DIGITONE." Its display is similar to Figure 52 "SET ESAM: TRUNK PARAMETERS:DIALING SPEED screen" (page 93).

Figure 52
SET ESAM: TRUNK PARAMETERS:DIALING SPEED screen

```
Enter Dialing Speed
1 - 10PPS1, 2 10PPS2, 3 - 20PPS, 4 - DIGITONE, <cr> - No Change
Trunk 0 Existing Dial Speed - 10PPS1 New Dial Speed -  Dial Speed Unchanged
Trunk Setup Menu for Trunk 1:
1 - Trunk Type
2 - Balance Impedance
3 - Termination Impedance
4 - Dialing Speed

9 - Return To Main Menu
```

7. **`Quit (No Save)`** — This command allows the user to exit the ESAM setup menu and discard any changes made to the system's ESAM configuration settings during the session. Its display is similar to Figure 53 "SET ESAM: QUIT (NO SAVE) screen" (page 94).

Copyright © 2003-2010 Nortel Networks. All Rights Reserved.

Figure 53
SET ESAM: QUIT (NO SAVE) screen

```
ESAM Setup Menu:
1 - System Parameters
2 - Show Slot Parameters
3 - Set Slot Parameters
4 - Phone Parameters
5 - XUT Parameters
6 - Trunk Parameters

8 - Quit (No Save)
9 - End (Save)
8
Are You Sure You Want To Discard All Changes? (YES or NO) Y
MCR::>
```

8. **`End (Save)`** — This command allows the user to exit the ESAM setup menu and save any changes made to the system's ESAM configuration settings during the session. Its display is similar to Figure 54 "SET ESAM: END (SAVE) screen" (page 94).

Figure 54
SET ESAM: END (SAVE) screen

```
ESAM Setup Menu:
1 - System Parameters
2 - Show Slot Parameters
3 - Set Slot Parameters
4 - Phone Parameters
5 - XUT Parameters
6 - Trunk Parameters

8 - Quit (No Save)
9 - End (Save)
9
Saving Values to Local EEPROM
MCR::>
```

`SET NAME (S N)`
This command sets the name of the near-end and remote sites. Its display is similar to Figure 55 "SET NAME (S N) screen" (page 94).

Figure 55
SET NAME (S N) screen

```
MCR::>s n
Change Near End Site Name  (YES or NO) N
```


Copyright © 2003-2010 Nortel Networks. All Rights Reserved.

SET SPAN (S S)

This command allows the user to set the number of timeslots used by the T1. Its display is similar to Figure 56 "SET SPAN (S S) screen" (page 95).

> ***Note:*** All SPAN configuration values are stored on the LMI. If the user replaces the LMI for any reason, all values set with the SET SPAN command and all commands on the Span setup menu must be reconfigured.

Figure 56
SET SPAN (S S) screen

```
MCR::>s s
Span Setup Menu:
1 - Show Span Configuration
2 - Change Span Configuration

9 - End
1
Enter Span Number (0-1) - 0
Current Configuration for Span 0
01 SYS   02 SYS   03 INS   04 INS   05 INS   06 INS
07 INS   08 INS   09 INS   10 INS   11 INS   12 INS
13 INS   14 INS   15 INS   16 INS   17 INS   18 INS
19 INS   20 INS   21 INS   22 INS   23 INS   24 INS

Span Setup Menu:
1 - Show Span Configuration
2 - Change Span Configuration

9 - End
2
Enter Span Number (0-1) - 0
Enter Channel Number to change (#### to return to Main Menu) ####
Span Setup Menu:
1 - Show Span Configuration
2 - Change Span Configuration

9 - End
9
```

SET TIME (S T)

This command configures the time kept at the near end of the system. Its display is similar to Figure 57 "SET TIME (S T) screen" (page 95).

Figure 57
SET TIME (S T) screen

```
MCR::>s t
Current Time 01:22:06 9:26
Current Time 09:26:00
Update distant end site? (YES or NO) Y
MCR::>
```


Copyright © 2003-2010 Nortel Networks. All Rights Reserved.

SET TIME DISTANT (S T D)
This command configures the time kept at the distant end by the system. Its display is similar to Figure 57 "SET TIME (S T) screen" (page 95).

HOST (HO)

The HOST command connects the user to the SDI port.

@@@

The @@@ command terminates the connection to the SDI port.

TEST (T)

The TEST commands are described in “Testing the carriers” (page 109).

QUIT (Q)

The **QUIT** command allows the user to leave the MCR system’s MMI setup. Its display is similar to Figure 58 "QUIT (Q) screen" (page 96).

Figure 58
QUIT (Q) screen

```
MCR::>q
User logout
```

Verifying mini-carrier links at the remote site

When all the MCR equipment is connected, all mini-carrier alarm LEDs may be turned OFF and the signaling across the link will work even though there may be a mismatch in mini-carrier links between the local and remote ends. However, the voice and data connections may not work due to the scrambling of the timeslots, which are assigned to specific links and cannot be used by other links. The Mini-Carrier Test 1 may not show any errors under these conditions.

All equipped mini-carriers have been previously connected and configured at the local site and the mini-carrier circuit ID recorded for each link 0-1. All mini-carrier facilities (mini-carrier links) should have been installed and tested by the T1 provider up to the demarcation point at both ends.

Procedure 7
Verifying mini-carrier links at the remote site

Step	Action
	To insure that all mini-carrier links are connected to their corresponding I/O cable connectors at the remote site, you must identify, test, and tag each mini-carrier link individually as follows:

Copyright © 2003-2010 Nortel Networks. All Rights Reserved.

1 Configure all mini- carrier links by executing the `S C` (Set Configuration) command. Any unused mini-carrier links must be configured as "unequipped" to prevent the mini-carrier alarm LED from being constantly ON. Default parameters should not be changed without good reason. Execute the `D C` (Display Configuration) command to verify the configuration.

2 Identify the circuit ID for carrier 0 at the T1 network demarcation point and connect the corresponding patch cable to the I/O cable connector (8-pin modular jack) for carrier 0.

3 Observe the mini-carrier alarm LEDs on the faceplate of the RMI. Initially, mini-carrier alarm LEDs for all equipped mini-carrier links should be ON due to Loss-of-Signal. The LED for carrier 0 should be turned OFF approximately 10 seconds after the patch cable for the selected carrier 0 is plugged into the RMI I/O cable connector for carrier 0.

If a good quality signal is received by both the RMI and the LMI on carrier 0, the link is installed in the appropriate I/O cable connectors at both ends. If the connection is mismatched (carrier 0 at one end connects to carrier 1 at the other end), the alarm LED will remain ON.

The LED also remains ON if there is a carrier alarm on the RMI (near-end), however, the LED is turned OFF if there is no carrier alarm on the RMI (near-end) and communication cannot be established across the link due to an alarm on the LMI (distant end).

Distant-end carrier alarms cause the near-end LED to turn ON only if the RMI and LMI can communicate.

4 Test the carrier 0 link by executing the mini-carrier status commands (`D S` — display mini-carrier status and `D S D` — display mini-carrier status distant) using the MMI terminal. Compare the mini-carrier status on both the RMI (near-end) and the LMI (distant-end). Refer to "Configuring the carriers," on page 76 to see the displays of these two MMI commands. There are four possible conditions:

- If the LED for carrier 0 is OFF and the RMI and LMI have established signaling communication, both ends will show "No Alarm" for carrier 0 and "Loss of Signal" for carrier 1. There is no mismatch.
- If the LED for carrier 0 stays ON due to a mismatch, the LMI (distant-end) will show "Loss of Signal" for carrier 0 and "No Alarm" for carrier 1.
- If the LED for carrier 0 stays ON due to a carrier alarm condition on the RMI (near-end), the `D S` command will

Copyright © 2003-2010 Nortel Networks. All Rights Reserved.

show the type of carrier alarm on carrier 0, and the D S D command cannot retrieve the distant-end status.

- If the LED for carrier 0 RMI (near-end) is OFF but the RMI and the LMI cannot establish communication due to a carrier alarm condition on the LMI (distant-end), the `D S` command will show "No Alarm" on carrier 0 on the RMI (near-end), and the `D S D` command cannot retrieve the far-end status.

5 Disconnect the patch cable from the I/O cable connector for carrier 0 that was just tested and repeat steps **1** through **5** for carrier 1 as equipped before proceeding to step **6**.

6 Any carrier faults must be isolated and corrected. In case of mismatched carriers, the patch cables must be traced to the demarcation point at each end, and the carrier circuit IDs verified at both ends, to determine which end of the carrier has been mis-wired or incorrectly identified.

7 After all carriers have been identified and labeled at the I/O cable connectors, they should all be plugged into the proper I/O cable connectors for the RMI and tested individually using the MMI Carrier Test 3 (Remote Loopback). Refer to "Testing the carriers" (page 109).

--End--

The carrier links are now connected correctly. This will be further established during acceptance testing when the actual calls are made to verify the voice and data transmission across the carrier links.

Display current mini-carrier equipment configuration

Before you conclude the installation and configuration of the MCR, re-verify the configuration parameters and make sure that they are set properly.

To display the configuration parameters, execute the `D C` command on the MMI terminal. See Figure 21 "DISPLAY CONFIG (D C) screen" (page 78) for an example of what the MMI terminal may display:

Parameter values explanation:

- **Alarm Enabled** — Alarm monitoring and logging is enabled. MCR messages are enabled.
- **Alarm Threshold** — Number of bipolar violations. E^{-6} represents 10^{-6} or 1 error in 1 million bits, E^{-5} represents 10^{-5} or 1 error in 100,000 bits, and E-4 represents 10^{-4} or 1 error in 10,000 bits.
- **Threshold Duration** — Mini-Carrier signal monitoring duration (1 second to 3600 seconds) to detect bit error rate (CRC and BIPV)

Copyright © 2003-2010 Nortel Networks. All Rights Reserved.

exceeding the threshold. The error counter is updated every second for the length of the threshold duration.

- **Frame Slip Threshold** — Number of carrier frame slips allowed in a given time duration.
- **Frame Slip Threshold Duration** — Carrier frame synchronization monitoring duration (1 hour to 24 hours) to detect the number of frame slips specified by the Frame Slip Threshold.
- **Current DIP Switch S2 and S3 Settings** — Shows the setting of SW2 (U23) and SW3 (U51), positions 1 through 8, on the LMI if displaying the local site, or SW2 and SW3, positions 1 through 8 on the RMI if displaying the remote site.

Copyright © 2003-2010 Nortel Networks. All Rights Reserved.

Copyright © 2003-2010 Nortel Networks. All Rights Reserved.

Maintenance

Contents

This section contains information on the following topics:

"Introduction" (page 101)

"Repair and replacement" (page 101)

"Maintenance overview" (page 102)

"MMI diagnostic tools" (page 104)

Introduction

This section describes system maintenance tools and procedures to guide you in identifying Mini-Carrier Remote (MCR) faults, locating defective equipment, correcting problems by fixing or replacing defective equipment, and verifying the operation of MCR after corrections or replacements have been made.

Repair and replacement

The following are critical points for dealing with card failure:

- The MCR circuit packs are field *replaceable* only. With the exception of daughterboard replacements, they are **not** to be serviced in the field.
- In the event of failure, the circuit packs must be returned to Nortelfor repair or disposal.
- All ESAM configuration data are stored on the RMI. If the user replaces the RMI for any reason, all data set with the **`SET ESAM`** command, and all commands on the ESAM setup menu, must be reconfigured.
- All SPAN configuration data are stored on the LMI. If the user replaces the LMI for any reason, all values set with the **`SET SPAN`** command, and all commands on the Span setup menu, must be reconfigured

Copyright © 2003-2010 Nortel Networks. All Rights Reserved.

CAUTION
Lithium Battery
The Mini-Carrier Remote circuit packs contain a lithium battery, and there is a danger of explosion if the battery is incorrectly replaced. The battery will be disposed or recycled by the Nortelrepair depot.

Maintenance overview

MCR maintenance deals with three types of problems:

- installation,
- daughterboard replacement, and
- operation.

Installation problems are those problems that occur with MCR during the installation of an entire system or during the addition of MCR to an existing system.

Daughterboard replacement is performed in response to upgrades and daughterboard failures. See "Installing or replacing an MCR daughterboard" (page 103) for the procedure for replacing the daughterboards.

Operation problems (for example, component failure or accidental equipment disconnection) are those problems that occur during normal system operation.

In either case, problem identification should be approached systematically. A problem may have more than one cause. To isolate the cause, a knowledge of Mini-Carrier Remote operation is required. This information can be found in "Description" (page 13). Once the cause is identified, the problem can be corrected by replacing the defective card, connecting accidentally disconnected cables, or correcting software problem(s).

The system provides built-in self-diagnostic indicators, as well as software and hardware tools. These diagnostic facilities simplify system troubleshooting and reduce Mean-Time-To-Repair (MTTR).

This document focuses on the maintenance of Mini-Carrier Remote equipment at the remote site and in the system. It requires that non-Mini-Carrier Remote system elements operate correctly before diagnosing Mini-Carrier Remote problems. For more information on maintaining the entire system, refer to *Communication Server 1000M and Meridian 1 Large System Maintenance* (NN43021-700) and *Communication Server 1000M and Meridian 1 Small System Maintenance* (NN43011-700).

Copyright © 2003-2010 Nortel Networks. All Rights Reserved.

Installing or replacing an MCR daughterboard

Daughterboards are installed or replaced due to daughterboard upgrades or failures. This procedure should be followed when instructed to do so by Nortel.

WARNING
Following this procedure results in the loss of ESAM data.

Step	Action
To install or replace a daughterboard on an MCR card, follow the steps below:	
1	Disable the card requiring the new daughterboard using LD32 (see xxx for procedure).
2	Remove the MCR card from the system.
3	Place the board on a work surface so that the faceplate is close to you, and backplane connector away from you.
4	If metal covers are installed on the MCR board connectors or on the daughterboard connector, remove and discard them.
5	If replacing an existing daughterboard, hold the two opposing, outside edges of the daughterboard and lift it ***straight up***. **WARNING** Failure to lift straight up could cause damage to the connectors.
6	Align the new daughterboard with the connectors.
7	Push the daughterboard ***straight down*** into the connectors until the connectors snap into place. **WARNING** Once the connectors are snapped together, do not apply more force or the components may be damaged.
8	Reinstall the MCR card into the system.
9	Reconfigure the ESAM data (see xxx for procedure).
10	Return the card to service using LD 32 (see xxx for procedure).

--End--

Copyright © 2003-2010 Nortel Networks. All Rights Reserved.

MMI diagnostic tools

Hardware diagnostic tools

System hardware diagnostic tools consist of:

- card self-tests
- LED indicators, and
- enable/disable switches.

Card self-tests

Mini-Carrier Remote cards automatically perform a self-test

- when inserted into an operating system module,
- when enabled, and
- upon system power up or reset.

A self-test may also be performed using software commands.

The self-test checks general card functions and determines if the card is operating correctly. It is useful when first installing the cards because it gives an immediate indication of the card's operating status.

LED indicators

MCR cards are equipped with red LED indicators and module power supplies are equipped with green LED indicators. These indicators show the status of each card or power supply.

Mini-Carrier Remote LED indicators

Both the Local Mini-carrier Interface card and the Remote Mini-carrier Interface card have LED indicators on the front panel. These are:

- Card LED—red LED indicating card status. If the LED is ON, the card may be faulty or disabled. At power-up, the card LED blinks three times during self-test if functioning correctly, otherwise it turns ON and stays ON. The LED turns OFF when the card is software-enabled.
- Carrier LEDs—red LED indicating carrier status. The LED is OFF when the carrier is operating correctly or it is *not* equipped by the MMI command **`SET CONFIGURATION (S C)`**. If the carrier is faulty at either end, the carrier LED will turn ON and stay ON until faults are corrected at both ends.

  Note: Far-end alarms are communicated across the link if the MicroLink is up; that is, the carrier is good end-to-end in both directions.

Copyright © 2003-2010 Nortel Networks. All Rights Reserved.

Maintenance LED—amber LED turns ON when the card is in the maintenance mode; that is, when carrier tests are run by the MMI command over a carrier, when the Mini-Carrier Remote interface card is in Emergency Stand-Alone Mode (ESAM), or when alarms are disabled by the MMI command **A D**.

Mini-Carrier Remote MMI maintenance commands

The Local Mini-carrier Interface card and Remote Mini-carrier Interface card provide a Man-Machine Interface (MMI) port to connect to a TTY or a configuration and maintenance terminal. Through this terminal you can directly issue commands to test and maintain system carrier equipment including the carrier links.

Table 24 "MMI commands" (page 115) lists MMI commands that are directly issued to the MCR system over MMI terminals, which are connected to the Local Carrier Interface card MMI port and the Remote Mini-carrier Interface card MMI port. When entering MMI commands, separate the command letters with a space (A space D) and [P] indicates a pause. Detailed output of maintenance commands is explained in various maintenance procedures in this section.

Fault isolation/correction using MMI maintenance commands

You can perform testing and troubleshooting of the Mini-Carrier Remote from a local or a remote MMI terminal or TTY by typing MMI commands on the terminal without loading system diagnostic programs (overlays).

These commands provide current equipment status, invoke card testing, check equipment performance, and print messages from log files.

Checking Mini-Carrier Remote status using MMI commands

This procedure uses MMI commands to maintain Mini-Carrier Remote cards and carrier status.

Step	Action
In the MMI mode the terminal issues direct commands to the system to display operational conditions, to set up carrier parameters, and to test individual carrier links.	
1	Log in on the MMI maintenance terminal.
2	Enter the **DISPLAY STATUS (D S)** command to display near-end carrier status. Enter the **DISPLAY STATUS DISTANT (D S D)** command to display distant-end carrier status. The displays are similar to Figure 59 "DISPLAY STATUS screen" (page 106) and Figure 60 "DISPLAY STATUS DISTANT screen" (page 106). These commands are also discussed on "**DISPLAY STATUS DISTANT (D S D)**" (page 81).

Copyright © 2003-2010 Nortel Networks. All Rights Reserved.

Figure 59
DISPLAY STATUS screen

```
MCR::>d s
MCR S/N testrmi Firmware Version V6.1D 13:51:01 03/21/98
Remote Site: RMI VERIFICATION

Link  0  Alarm Level 0
Link  1  Alarm Level 0
MCR::>
```

Figure 60
DISPLAY STATUS DISTANT screen

```
MCR::>d s d
MCR S/N  Firmware Version V6.1C 14:56:26 03/17/98
Local Site:

Link  0  Alarm Level 0
Link  1  Alarm Level 0
LMX 0 S/N NNTM1831R0LV F/W V6.1C Status - NORMAL
LMX 1 S/N NNTM1831TE22 F/W V6.1C Status - NORMAL
LMX 2 S/N NNTM1831TE25 F/W V6.1C Status - NORMAL
MCR::>
```

The responses displayed on the screen show: the firmware version, present time and date, individual carrier fault threshold parameters, and the present status of each carrier link.

If a carrier-link mismatch exists, the status will display unequal alarm levels across a mismatched link. To verify that carrier links are connected correctly at both ends perform the tests in "Verifying mini-carrier links at the remote site" (page 96).

3 Display the alarm log by executing the **DISPLAY ALARM (D A)**, or **DISPLAY ALARM DISTANT (D A D)** commands. These commands display the list of the most recent 100 alarms for the near-end (**D A**) or distant-end (**D A D**) locations along with the date and time that each alarm occurred. Both screens are similar to Figure 61 "DISPLAY ALARM (D A) screen" (page 107).

> ***Note:*** Invoking the **D A** and **D A D** commands display the alarm log. To clear the alarm log, use the **CLEAR ALARM LOG (C A L)** and **CLEAR ALARM LOG DISTANT (C A L D)** commands.

Copyright © 2003-2010 Nortel Networks. All Rights Reserved.

Figure 61
DISPLAY ALARM (D A) screen

```
MCR::>d a

Alarm Log
02/05/98  10:56:38 Log Cleared
MCR::>
```

--End--

Checking the carrier performance status

The Remote Mini-carrier Interface card can display carrier performance information for the current hour and for the last 24 hours. The data and total errors are shown separately in the report for both the local and the remote site. The report displays the bit error rate, loss of frame count, loss of signal, alarm indication count, and frame slip count. To obtain the information for the current hour, execute the *DISPLAY PERFORMANCE (D P)* command for the near-end or the *DISPLAY PERFORMANCE DISTANT (D P D)* command for the distant-end carrier performance status using the MMI terminal.

Step	Action

To obtain the carrier link performance status:

1 Log in on the maintenance terminal.

At the > prompt, type **D P** and press the Enter key.

The report displays carrier error counts monitored over 17 minutes for carrier 0. An example of the on-screen display for this command may be seen in Figure 24 "DISPLAY PERFORMANCE (D P) screen" (page 80).

Note: The performance measurements indicate the service quality of the carrier link you selected. Ideally all errored second categories should be 0. If a number other than 0 appears in one or more columns, it indicates momentary or continuous problem on the link. If the numbers are small and the carrier is not in alarm state, the errors may have been temporary and the link may continue to operate within the specified thresholds.
To clear the cumulative error counter, enter the **CLEAR ERROR (C E)** or **CLEAR ERROR DISTANT (C E D)** command, as appropriate. Clearing these errors does not affect the errored second counters.

Copyright © 2003-2010 Nortel Networks. All Rights Reserved.

2 To display a similar report for the 24-hour period listed in 1 hour increments enter the **DISPLAY HISTORY (D H)** command for the near end, or **DISPLAY HISTORY DISTANT (D H D)** for the distant end. The screen displayed is similar to Figure 62 "DISPLAY HISTORY (D H) screen" (page 108).

Ideally all the parameters should show 0 for optimum performance. However, if the carrier is not in alarm state, it may continue to perform within the specified threshold limits.

Figure 62
DISPLAY HISTORY (D H) screen

```
MCR::>d h
Which Carrier? (0-1):0
            MCR Interface History Performance Log
                      For Carrier Number 0
                        01:17:52 02/06/98
 Hour   Errored   Bursty   Unavailable  Loss Frame  Frame Slip   Error
Ending  Seconds   Seconds  Seconds      Seconds     Seconds      Counter
 01:00   00000    00000    00000        00000       00000        32768
 00:00   00000    00000    00000        00000       00000        32768
 23:00   00000    00000    00000        00000       00000        32768
 22:00   00000    00000    00000        00000       00000        32768
 21:00   00000    00000    00000        00000       00000        32768
 20:00   00000    00000    00000        00000       00000        32768
 19:00   00000    00000    00000        00000       00000        32768
 18:00   00000    00000    00000        00000       00000        32768
 17:00   00000    00000    00000        00000       00000        32768
 16:00   00000    00000    00000        00000       00000        32768
 15:00   00000    00000    00000        00000       00000        32768
 14:00   00000    00000    00000        00000       00000        32768
 13:00   00000    00000    00000        00000       00000        32768
 12:00   00000    00000    00000        00000       00000        32768
 11:00   00001    00000    00000        00000       00001        32768
 10:00   00000    00000    00000        00000       00000        00000
 09:00   00000    00000    00000        00000       00000        00000
 08:00   00000    00000    00000        00000       00000        00000
 07:00   00000    00000    00000        00000       00000        00000
 06:00   00000    00000    00000        00000       00000        00000
 05:00   00000    00000    00000        00000       00000        00000
 04:00   00000    00000    00000        00000       00000        00000
 03:00   00000    00000    00000        00000       00000        00000
 02:00   00000    00000    00000        00000       00000        00000

MCR::>
```

--End--

Monitoring for errors

MMI monitors the performance of the T1 links according to several performance criteria including errored, severely errored, bursty, unavailable, loss of frame and frame slip seconds. It registers the performance of these criteria by reading their status every second and counting their results. This information is accumulated for an hour, at which time the counters are reset to 0. Results are maintained for each of the previous 24 hours.

Copyright © 2003-2010 Nortel Networks. All Rights Reserved.

The performance criteria for which these counts are maintained are as follows:

- Errored seconds — one or more CRC-6 errors, or one or more out-of-frame errors during the second
- Bursty seconds — More than one and less than 320 CRC-6 errors during the second.
- Severely errored second (SES) (Not Displayed) — 320 or more CRC-6 errors, or 1 or more out-of-frame (OOF) errors during the second
- Unavailable seconds — Unavailable state starts with 10 consecutive severely errored seconds and ends with 10 consecutive non-severely errored seconds (excluding the final 10 non-severely errored seconds)
- Frame slip seconds — one or more frame slips in a second
- Loss-of-frame seconds — Loss-of-frame or loss-of-signal for three consecutive seconds

When the T1 framer is configured for D4 operation, the firmware uses bipolar violations instead of CRC-6 errors. When using bipolar violations, the total number of bipolar violations is used as CRC-6 errors in the above calculations.

The MMI maintains an overall error counter which is a sum of all the errors counted for the six performance criteria listed above. The error counter may only be cleared by entering the **CLEAR ERROR (C E)** command. The error counter will stop counting at 65,000. The error counter provides an easy method to determine if an alarm condition has been corrected. Simply clear the error counter, wait for two to three minutes, and enter a **DISPLAY PERFORMANCE (D P)** command. Then check the error counter to see if any errors have occurred since the counter was cleared.

MMI displays performance-counter reports through the **DISPLAY PERFORMANCE (D P)** (see "Checking the carrier performance status" (page 107)).

Testing the carriers

Use the following procedures for testing the carriers.

Step	Action
1	After checking the carrier status report and performance log and finding that one or more carriers is faulty, proceed to isolate the cause by testing the carriers using the **TEST (T)** command. The screen displayed by the **TEST (T)** command is similar to Figure 63 "TEST screen" (page 110).

Copyright © 2003-2010 Nortel Networks. All Rights Reserved.

Figure 63
TEST screen

```
MCR::T
Test menu:

1 - Online Test
2 - Near End Loopback Test
3 - Remote Loopback
4 - Network Loopback
5 - Loop Only

9 - End

9
MCR::>
```

The **TEST (T)** command allows you to run tests on the local or remote MCR card, the T1 links, or network equipment. The five available tests are designed to provide you with the capability to isolate fault conditions to a specific source. After entering the **TEST (T)** command, you will be prompted to choose which of the five tests you wish to initiate. The prompt will appear similar to Figure 63 "TEST screen" (page 110).

Tests may be performed once, repeatedly for between 1 and 98 minutes, repeatedly for between 1 and 10 minutes, or continuously (selected by entering 99 minutes), depending on the test, until the specified duration passes, or a **STOP TEST (S)** command is entered. Tests will continue for the duration specified even if a failure occurs. Only a **STOP TEST (S)** command terminates a test requested to run continuously.

During a test, if an invalid word is received, a failure peg counter increases by one. This peg counter's maximum capacity is 65,000. At the end of the test, the Test Results message will indicate how many failures, if any, occurred during the test. If the counter reaches 65,000, it will remain there until reset.

Test 1 listed above is a test that can be run while the MCR Circuit Pack is on line. The On-line Carrier test will indicate whether or not there is a failure, but does not indicate where the failure has occurred.

Tests 2 through 4 are off-line diagnostic tests and must be run when the MCR Circuit Pack on which the tests are being run has been disabled, since the testing will interfere with call traffic. By using the off-line tests in tandem, you will be able to isolate a

Copyright © 2003-2010 Nortel Networks. All Rights Reserved.

failure to a field-replaceable component such as the near-end MCR, the distant-end MCR, or the network equipment.

--End--

Table 23 "MMI T1 tests" (page 111) associates each MCR test with the equipment it tests:

Table 23
MMI T1 tests

Test Number	Equipment Tested	Test Description
1	The Entire MCR System on unused T1 channels.	Non-disrupting line test
2	Near-end MCR	Local Loopback
3	The Entire MCR System on the selected T1 carrier.	Remote Loopback
4	Near-end MCR, T1 Link, and T1 equipment up to the Network loopback.	Network has loopback
5	Near-end MCR, T1 Link, and T1 equipment up to the Network loopback.	Loop back towards network

The following sections explain how to initiate these tests in MMI and each test's function.

A verbose mode is also available for the user. This mode provides a display of in-progress test results and allows the user to see exactly which port, or ports are not passing the test. The command to activate the verbose mode is **`TEST VERBOSE (T V)`**.

On-line Carrier test

Test 1, the On-line Carrier test, allows a T1 link to be tested without effecting call activity. Test patterns are passed through the T1 link, looped back at the distant end and checked at the near end. A failure is detected if the MCR does not receive the data word within 100 ms. In this case, a failure peg counter increases by 1. This counter's maximum capacity is 65,000. At the end of the test, the test results message will indicate how many failures occurred during the test. If this test fails, it indicates problem in the MCRs, T1 link, or the network. To isolate the failure to a specific piece of equipment, further tests will have to be run. The following figure demonstrates how the signaling is looped back.

Copyright © 2003-2010 Nortel Networks. All Rights Reserved.

Figure 64
On-line Carrier test

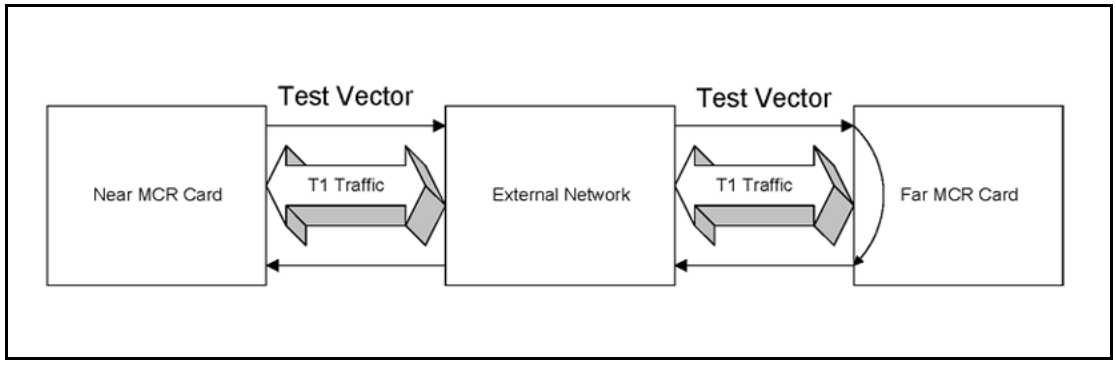

Off-line Near-end Loopback test

Test 2, the Off-line Near-end Loopback test loops the near-end signal back toward the near-end MCR. Test data is generated, sent through the framer, LIU, and magnetics, then looped back through relays towards the board. A failure is detected if the MCR does not receive the data word that was sent. If a failure occurs, a failure peg counter is incremented. This counter will saturate at 65,000 counts. At the end of the test, the test results message will indicate how many failures occurred during the test. A failure on test #2 indicates a near-end defective MCR Circuit Card.

Figure 65
Off-line Near-end loopback test

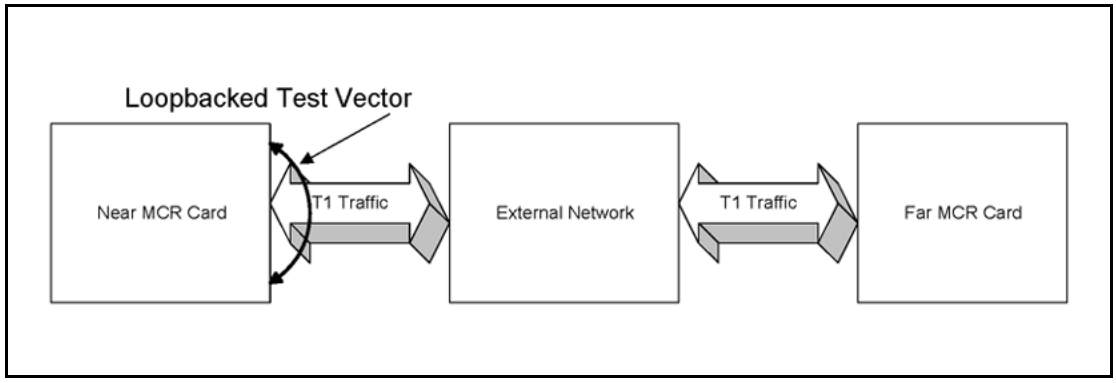

This test can also be issued with a distant modifier. Entering T D will cause your MCR card to command the far-end MCR to run its Off-line Near-end Loopback test.

> ***Note:*** This command is limited to 10 minutes because you will be unable to stop the far-end MCR from running the command.

Off-line Distant-end Loopback test

Test 3, the Off-line Distant-end Loopback test loops the distant-end signal back towards the near end. You can perform the Off-line Distant-end Loopback test on the distant-end MCR. A failure is detected if the MCR

Copyright © 2003-2010 Nortel Networks. All Rights Reserved.

does not receive the data word that was sent. If a failure occurs, the failure peg counter is incremented. This counter will saturate at 65,000 counts. At the end of the test, the test results message will indicate how many failures occurred during the test. A failure on test 3 indicates a far-end defective MCR Circuit Card or a bad T1 link.

Figure 66
Off-line Distant-end Loopback test

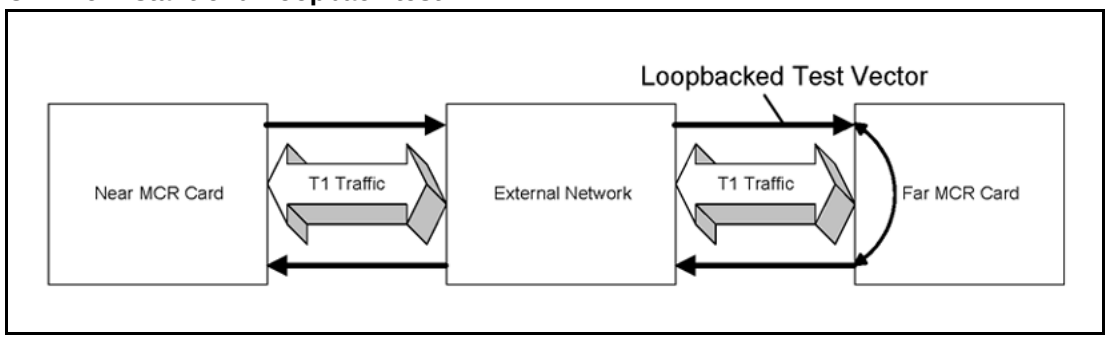

Off-line Network Loopback Test

Test 4, the Off-line Network Loopback test assumes that a loopback is configured somewhere in the network. Test data is generated at the near-end MCR and received at the near end. You can perform the Off-line Network Loopback test on the near end or the distant end. A failure is detected if the MCR does not receive the data word within 100 ms. In this case, a failure peg counter is incremented. This counter will saturate at 65,000 counts. At the end of the test, the test results message will indicate how many failures occurred during the test. This test could be performed with the carrier looped back toward the MCR at the LTU, or anywhere along the carrier link to determine the location of a carrier link failure.

Figure 67
Off-line Network Loopback test

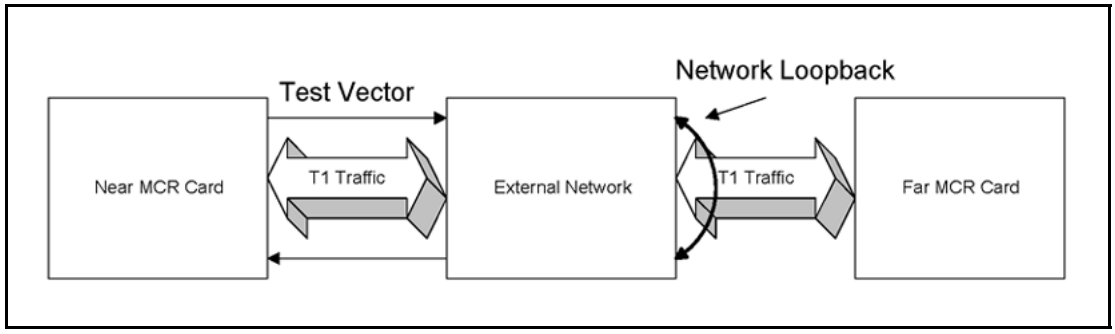

Off-line Loopback Toward Network Test

Test 5, the Off-line Loopback Toward Network test loops the signal from the MCR toward the carrier. No test data is generated or received at either end of the link. You can perform the Off-line Loopback Toward Network

Copyright © 2003-2010 Nortel Networks. All Rights Reserved.

test on the near end or the distant end. No failure is indicated. The test simply performs a loopback toward the network on the T1 link. This test can be used to isolate network problems.

Figure 68
Off-line Loopback Toward Network test

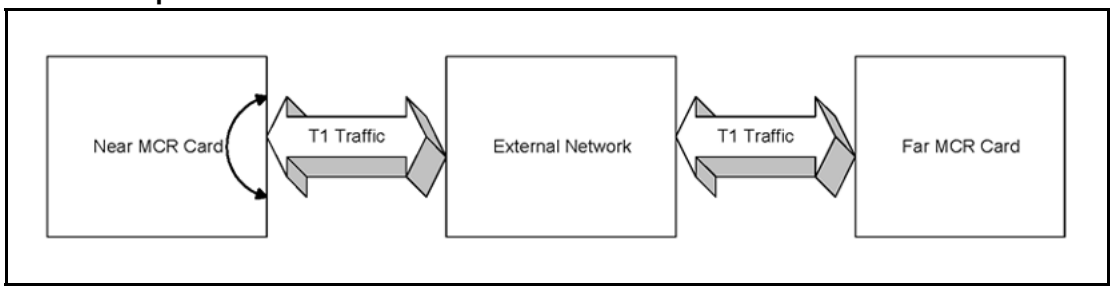

Copyright © 2003-2010 Nortel Networks. All Rights Reserved.

Appendix
Man-Machine Interface (MMI) commands

This appendix provides a list and brief explanation of the Man-Machine Interface (MMI) commands available to users through the RS-232 terminal located at the local site.

Table 24
MMI commands

Command	Description
A D	**Alarm Disable** — Disables all local and remote carrier alarms. Maintenance LED lit.
A E	**Alarm Enable** — Enables all local and remote carrier alarms.
C A	**Clear Alarm** — Clears all local and remote carrier alarms.
C A L	**Clear Alarm Log** — Clears near-end alarm log.
C A L D	**Clear Alarm Log Distant** — Clears distant-end alarm log.
C E	**Clear Error** — Clears near-end error counters for all carriers.
C E D	**Clear Error Distant** — Clears distant-end error counters for all carriers.
C M	**Clear Memory** — Restores all configuration settings on the near-end card to their original default values.
C M D	**Clear Memory Distant** — Restores all configuration settings on the distant-end card to their original default values.
D A	**Display Alarm Log** — Displays near-end alarm log.
D A D	**Display Alarm Log Distant** — Displays distant-end alarm log.
D C	**Display Configuration** — Displays current configuration of the near-end mini-carrier interface cards.
D C D	**Display Configuration Distant** — Displays current configuration of the distant-end mini-carrier interface cards.
D H	**Display History** — Displays near-end performance counters for a specified carrier for the last 24 hours.

Copyright © 2003-2010 Nortel Networks. All Rights Reserved.

Table 24
MMI commands (cont'd.)

Command	Description
D H D	**Display History Distant** — Displays distant-end performance counters for a specified carrier for the last 24 hours.
D M	**Display Map** — Displays the in-service or out-of-service (I or O) status of all channels on both T1 spans at the near end.
D M D	**Display Map Distant** — Displays the in-service or out-of-service (I or O) status of all channels on both T1 spans at the distant end.
D P	**Display Performance** — Displays near-end performance counters for the specified carrier during the past hour.
D P D	**Display Performance Distant** — Displays distant-end performance counters for the specified carrier during the past hour.
D S	**Display Status** — Displays the status of the carriers on the near-end.
D S D	**Display Status Distant** — Displays the status of the carriers on the distant end.
E	**Emergency stand alone mode** — Displays current ESAM status and available ESAM setting options.
E F	**Emergency stand alone mode, Force** — Causes the specified card to operate in the Emergency Stand-Alone Mode at all times.
E N	**Emergency stand-alone mode, Never** — Disables the specified card's ability to operate in the Emergency Stand-Alone Mode.
E A	**Emergency stand-alone mode, Auto** — Causes the specified card to operate in the Emergency Stand-Alone Mode automatically when two channels go into alarm.
HE or ?	**Help** — Displays the help screen.
HO	**Host** — Connects to the SDI port. The password is **`HOST`**. (@@@ terminates the connection. See "@@@" entry, below.)
L	**Log in** — Logs into the MMI terminal when the system has one Mini-Carrier Interface card. The password is **`MCRLINK`**. If logged in, typing **`L`** and an incorrect password will log out the user from MCR MMI system.
L xx	**Log in (daisy chain address)** — Logs into the specified card when the system has multiple Mini-Carrier Interface cards daisy-chained in the network module. The password is **`MCRLINK`**.
P D	**Provision Download** — Downloads provisioning data stored in the near-end's Flash module.
P D	**Provision Download Distant** — Downloads provisioning data stored in the near-end card's Flash module to the far-end card's Flash module.
P E	**Provision Erase** — Erases and tests the provisioning section of the Flash memory.

Copyright © 2003-2010 Nortel Networks. All Rights Reserved.

Table 24
MMI commands (cont'd.)

Command	Description
P I	**Provision Import** — Requests the near-end card to load its provisioning data from the Flash memory into RAM, on-board non-volatile memory and battery-backed RAM.
P R	**Provision Refresh** — Ensures that the LMI and RMI RAM contain all the provisioning data from every card in the system.
P S	**Provision Save** — Programs the Flash memory with a copy of the system's provisioning. This includes serial numbers, site names, ESAM, T1 span timeslots, enabled or disabled links, and alarm setting
P U	**Provision Upload** — Updates a provisioning file to the near-end card's FMM
P U D	**Provision Upload Distant** — Updates a provisioning file to the far-end card's FMM.
Q	**Quit** — Logs out the terminal user.
S A	**Set Alarms** — Allows user to set carrier alarm threshold and duration parameters.
S C	**Set Configuration** — Allows user to set carrier configuration, such as equipped or unequipped.
S D	**Set Date** — Allows user to set or verify the date currently maintained by near-end mini-carrier interface cards.
S D	**Set Date Distant** — Allows user to set or verify the date currently maintained by distant-end mini-carrier interface cards.
S E	**Set ESAM** — Allows user to configure the parameters of the Emergency Stand-Alone Mode.
S N	**Set Name** — Allows user to set the site name.
S S	**Set Span** — Allows user to set the number of timeslots used by the T1.
S T	**Set Time** — Allows user to set or verify the time currently maintained by near-end mini-carrier interface cards.
S T D	**Set Time Distant** — Allows user to set or verify the time currently maintained by distant-end mini-carrier interface cards.
@@@	Terminates the terminal connection to the host.
T	**Test** — Allows user to select 1 of 5 tests to be run on the specified carrier link.
T D	**Test Distant** — Allows user to select 1 of 5 tests to be run on the specified carrier link at the distant end.
T V	**Test Verbose** — Instructs system to display error reports while tests of specified carrier link at the near end are in progress.

Copyright © 2003-2010 Nortel Networks. All Rights Reserved.

Copyright © 2003-2010 Nortel Networks. All Rights Reserved.

Appendix
Regulatory approvals

This appendix provides the general information that is supplied to the user as required by the FCC.

The general information that should be provided:

- the FCC registration number and a list of all ports that connect to the network
- explanation and use of the ringer equivalence number
- rights of the telephone company
- what happens in case of telephone company equipment modification and in case of equipment trouble
- location of a repair center in the United States of America
- list of repairs a user or customer may be allowed to make
- rules about the coin service and state tariffs

Regulatory notices

Notice for United States installations

This equipment complies with Part 68 of the Federal Communication Commission (FCC) rules for the United States, as well as UL1950 requirements.

A label is located on the underside of the base unit containing the FCC registration number. You must, upon request, provide the following information to your local telephone company:

Facility Interface Code: 04DU9-DN
Service Order Code: 6.0P
USOC Jack Type:RJ48C

Copyright © 2003-2010 Nortel Networks. All Rights Reserved.

If trouble is experienced with the Mini-Carrier Remote equipment, please contact your authorized distributor or service center in the U.S.A. for repair/warranty information. There is no user repair involved with this equipment. The Nortelrepair facility is located in Nashville, Tennessee.

If the equipment is causing harm to the telephone network, the telephone company may request that you disconnect the equipment until the problem is resolved.

The equipment cannot be used on public coin service provided by the telephone company. Connection to Party Line Service is subject to state tariffs.

The telephone company may discontinue your service if the equipment causes harm to the telephone network. They will notify you in advance of disconnection, if possible. During notification, you will be informed of your right to file a complaint with the FCC.

Occasionally, the telephone company may make changes in its facilities, equipment, operations, or procedures that could affect the operation of this equipment. If so, the telephone company will provide advance notice in order for you to make the necessary modifications to maintain uninterrupted service.

If you experience trouble with Mini-Carrier Remote equipment, for repair/warranty information, please contact your authorized distributor or service center in the USA. If the trouble is causing harm to the telephone network, the telephone company may request you to remove the equipment from the network until the problem is resolved. Contact the state public utility commission, public service commission, or corporation commission for information.

Allowing Mini-Carrier Remote equipment to operate without proper answer supervision signals is a violation of FCC Rules, Part 68. Therefore:

- This equipment returns proper answer supervision signals to the Public Switched Telephone Network (PSTN) when:
  - — answered by the called station
  - — answered by the attendant
  - — routed to a recorded announcement device that can be administered by the CPE user
  - — routed to a dial prompt
- This equipment returns answer supervision on all DID calls forwarded back to the PSTN. Permissible exceptions are:

Copyright © 2003-2010 Nortel Networks. All Rights Reserved.

— a call is unanswered

— a busy tone is received

— a reorder tone is received

This equipment is capable of providing users access to interstate providers of operator services through the use of equal access codes. Failure to provide equal access capabilities is a violation of the Telephone Operator Consumer Services Improvement Act of 1990 and Part 68 of the FCC Rules.

Industry Canada warnings

The Industry Canada label identifies certified equipment. This certification means that the equipment meets certain telecommunications network protective, operational, and safety requirements as prescribed in the appropriate Terminal Equipment Technical Requirements Document(s). The Department does not guarantee that the equipment will operate to the user's satisfaction.

Before installing this equipment, users should ensure that it is permissible to be connected to the facilities of the local telecommunications company. The equipment must also be installed using an acceptable method of connection. The customer should be aware that compliance with the above conditions may not prevent degradation of service in some situations.

Repairs to certified equipment should be coordinated by a representative designated by the supplier. Any repairs or alterations made by the user to this equipment, or equipment malfunctions, may give the telecommunications company cause to request the user to disconnect the equipment.

Users should ensure for their own protection that the electrical ground connections of the power utility, telephone lines and internal metallic water pipe system, if present, are connected together. This precaution may be particularly important in rural areas.

Copyright © 2003-2010 Nortel Networks. All Rights Reserved.

CAUTION
Users should not attempt to make electrical ground connections themselves, but should contact the appropriate electric inspection authority, or electrician, as appropriate. This product complies with CSA C22.2, No. 225 and No 950-95 requirements.

Note: : The Ringer Equivalence Number (REN) assigned to each terminal device provides an indication of the maximum number of terminals allowed to be connected to a telephone interface. The termination on an interface may consist of any combination of devices subject only to the requirement that the sum of the Ringer Equivalence Number of all the devices may not exceed 5.

Copyright © 2003-2010 Nortel Networks. All Rights Reserved.

Appendix
Pin-outs

LMI Multi I/O cable assembly

Table 25 "LMI Multi-I/O cable assembly (NT5D85) connections" (page 123) associates the LMI Multi-I/O cable assembly (NT5D85) connectors to their correct connections.

Table 25
LMI Multi-I/O cable assembly (NT5D85) connections

CONN.	CONNECTS TO
P1	LMI backplane I/O connector
P2	T1 Carrier Link 0
P3	T1 Carrier Link 1
P4	alarm contact closure
P5	Man-Machine Interface (MMI)
P6	serial data interface (SDI)

Table 26 "LMI Multi-I/O cable assembly (NT5D85) pin-out" (page 123) is the pin-out table for the LMI Multi-I/O cable assembly (NT5D85).

Table 26
LMI Multi-I/O cable assembly (NT5D85) pin-out

WIRE	COLOR	FROM	TO	SIGNAL
W1	BLK	P1 – 21	P2 – 3	T1P0RXT
W1	WHT	P1 – 46	P2 – 11	T1P0RXR
W1	BLK	P1 – 22	P2 – 1	T1P0TXT
W1	RED	P1 – 47	P2 – 9	T1P0TXR
			P2 – 2	GND (SHD)
			P2 – 4	GND (SHD)
W2	BLK	P1 – 23	P3 – 3	T1P1RXT
W2	WHT	P1 – 48	P3 – 11	T1P1RXR

Copyright © 2003-2010 Nortel Networks. All Rights Reserved.

Table 26
LMI Multi-I/O cable assembly (NT5D85) pin-out (cont'd.)

WIRE	COLOR	FROM	TO	SIGNAL
W2	BLK	P1 – 24	P3 – 1	T1P1TXT
W2	RED	P1 – 49	P3 – 9	TIP1TXR
W3	WHT	P1 – 18	P4 – 3	FLTRLYNC
W3	RED	P1 – 19	P4 – 1	FLTRLYNO
W3	GRN	P1 – 20	P4 – 2	FLTRLYCO
W4	BLK	P1 – 17	P5 – 3	MMITXD
W4	WHT	P1 – 42	P5 – 2	MMIRXD
W4	BLK	P1 – 38	P5 – 5	GND
W4	RED	P1 – 43	P5 – 7	MMIARB0
W4	BLK	P1 – 44	P5 – 9	MMIARB1
W4	GRN	P1 – 45	P5 – 8	MMIARB2
W5	WHT	P1 – 39	P6 – 3	SDIRXD
W5	BLK	P1 – 40	P6 – 2	SDITXD
W5	BLK	P1 – 38	P6 – 5	GND
W5	RED	P1 – 43	P6 – 7	MMIARB0
W5	BLK	P1 – 44	P6 – 9	MMIARB1
W5	GRN	P1 – 45	P6 – 8	MMIARB2

LMI/LMX Multi-I/O cable assembly

Table 27 "LMI/LMX Multi-I/O cable assembly (NT5D86) connections" (page 124) associates each of the connectors on the LMI/LMX Multi-I/O cable assembly (NT5D86) to the correct card.

Table 27
LMI/LMX Multi-I/O cable assembly (NT5D86) connections

CONN.	CONNECTION
P1	LMI
P2	LMX 0
P3	LMX 1
P4	LMX 2

Table 28 "LMI/LMX Multi-I/O cable assembly (NT5D86) pin-out" (page 125) is the pin-out table for the LMI/LMX Multi-I/O cable assembly (NT5D86).

Copyright © 2003-2010 Nortel Networks. All Rights Reserved.

Table 28
LMI/LMX Multi-I/O cable assembly (NT5D86) pin-out

WIRE	COLOR	FROM	TO	SIGNAL
W1	BLK	P1 – 9	P2 – 10	DS30XMXTX0+
W1	WHT	P1 – 34	P2 – 35	DS30XMXTX0-
W1	BLK	P1 – 10	P2 – 9	DS30XMXRX0+
W1	RED	P1 – 35	P2 – 34	DS30XMXRX0-
W1	BLK	P1 – 11	P2 – 12	COMTXD0+
W1	GRN	P1 – 36	P2 – 37	COMTXD0-
W1	BLK	P1 – 12	P3 – 11	COMRXD0+
W1	BLU	P1 – 37	P3 – 36	COMRXD0-
W2	BLK	P1 – 13	P3 – 10	DS30XMXTX1+
W2	WHT	P1 – 38	P3 – 35	DS30XMXTX1-
W2	BLK	P1 – 14	P3 – 9	DS30XMXRX1+
W2	RED	P1 – 39	P3 – 34	DS30XMXRX1-
W2	BLK	P1 – 15	P4 – 12	COMTXD1+
W2	GRN	P1 – 40	P4 – 37	COMTXD1-
W2	BLK	P1 -– 16	P4 – 11	COMRXD1+
W2	BLU	P1 – 41	P5 – 36	COMRXD1-
W3	BLK	P1 – 17	P5 – 10	DS30XMXTX2+
W3	WHT	P1 – 42	P5 – 35	DS30XMXTX2-
W3	BLK	P1 – 18	P5 – 9	DS30XMXRX2+
W3	RED	P1 – 43	P5 – 34	DS30XMXRX2-
W3	BLK	P1 – 19	P5 – 12	COMTXD2+
W3	GRN	P1 – 44	P6 – 37	COMTXD2-
W3	BLK	P1 – 20	P6 – 11	COMRXD2+
W3	BLU	P1 – 45	P6 – 36	COMRXD2-

RMI Multi-I/O cable assembly

Table 29 "RMI Multi-I/O cable assembly (NT5D87) connections" (page 125) associates the connectors on the RMI Multi-I/O cable assembly (NT5D87) to its correct connection:

Table 29
RMI Multi-I/O cable assembly (NT5D87) connections

CONN	CONNECTS TO
P1	RMI

Copyright © 2003-2010 Nortel Networks. All Rights Reserved.

Table 29
RMI Multi-I/O cable assembly (NT5D87) connections (cont'd.)

CONN	CONNECTS TO
P2	T1 Link 0
P3	T1 Link 1
P4	alarm
P5	Man-Machine Interface (MMI)
P6	not used

Table 30 "RMI Multi-I/O cable assembly (NT5D87) pin-out" (page 126) is the pin-out table for the RMI Multi-I/O cable assembly (NT5D87):

Table 30
RMI Multi-I/O cable assembly (NT5D87) pin-out

WIRE	COLOR	FROM	TO	SIGNAL
W1	BLK	P1 – 19	P2 – 3	T1P0RXT
W1	WHT	P1 – 43	P2 – 11	T1P0RXR
W1	BLK	P1 – 21	P2 – 1	T1P0TXT
W1	RED	P1 – 45	P2 – 9	T1P0TXR
			P2 – 2	GND (SHD)
			P2 – 4	GND (SHD)
W2	BLK	P1 – 23	P3 – 3	T1P1RXT
W2	WHT	P1 – 47	P3 – 11	T1P1RXR
W2	BLK	P1 – 25	P3 – 1	T1P1TXT
W2	RED	P1 – 49	P3 – 9	TIP1TXR
			P3 – 2	GND (SHD)
			P3 – 4	GND (SHD)
W3	WHT	P1 – 13	P4 – 3	FLTRLYNC
W3	RED	P1 – 15	P4 – 1	FLTRLYNO
W3	GRN	P1 – 17	P4 – 2	FLTRLYCO
W4	BLK	P1 – 11	P5 – 3	MMITXD
W4	WHT	P1 – 35	P5 – 2	MMIRXD
W4	BLK	P1 – 38	P5 – 5	GND
W4	RED	P1 – 37	P5 – 7	MMIARB0
W4	BLK	P1 – 39	P5 – 9	MMIARB1
W4	GRN	P1 – 41	P5 – 8	MMIARB2
W5	WHT	P1 – 9	P6 – 3	SDIRXD

Copyright © 2003-2010 Nortel Networks. All Rights Reserved.

Table 30
RMI Multi-I/O cable assembly (NT5D87) pin-out (cont'd.)

WIRE	COLOR	FROM	TO	SIGNAL
W5	BLK	P1 – 33	P6 – 2	SDITXD
W5	BLK	P1 – 38	P6 – 5	GND
W5	RED	P1 – 37	P6 – 7	MMIARB0
W5	BLK	P1 – 39	P6 – 9	MMIARB1
W5	GRN	P1 – 41	P6 – 8	MMIARB2

T1 CSU Cable Kit adapters

CPE to Network male (NT7R93AA)

Table 31 "CPE to Network male DB15 to RJ48 adapter pin-out" (page 127) is the pin-out table for the CPE to Network male DB15 to RJ48 adapter of the T1 to CSU Cable Kit (NT7R87BA).

Table 31
CPE to Network male DB15 to RJ48 adapter pin-out

WIRE	COLOR	FROM	SIGNAL RJ48	TO	DB15M
W1	BLUE	P1 – 1	TIP IN	P2 – 3	TIP IN
W1	ORANGE	P1 – 2	RING IN	P2 – 11	RING IN
W1	BLACK	P1 – 3	NC	P2 – 2	NC
W1	RED	P1 – 4	RING OUT	P2 – 9	RING OUT
W1	GREEN	P1 – 5	TIP OUT	P2 – 1	TIP OUT
W1	YELLOW	P1 – 6	NC	P2 – 4	NC
W1	BROWN	P1 – 7	SIG 1	P2 – 15	SIG 1
W1	GRAY	P1 – 8	SIG 2	P2 – 8	SIG 2

CPE to Network female (NT7R93BA)

Table 32 "CPE to Network female DB15 to RJ48 adapter pin-out" (page 127) is the pin-out table for the CPE to Network female DB15 to RJ48 adapter of the T1 to CSU Cable Kit.

Table 32
CPE to Network female DB15 to RJ48 adapter pin-out

WIRE	COLOR	FROM	SIGNAL RJ48	TO	SIGNAL DB15F
W1	BLUE	P1 – 1	TIP IN	P2 – 3	TIP IN
W1	ORANGE	P1 – 2	RING IN	P2 – 11	RING IN
W1	BLACK	P1 – 3	GROUND	P2 – 2	GROUND

Copyright © 2003-2010 Nortel Networks. All Rights Reserved.

Table 32
CPE to Network female DB15 to RJ48 adapter pin-out (cont'd.)

WIRE	COLOR	FROM	SIGNAL RJ48	TO	SIGNAL DB15F
W1	RED	P1 – 4	RING OUT	P2 – 9	RING OUT
W1	GREEN	P1 – 5	TIP OUT	P2 – 1	TIP OUT
W1	YELLOW	P1 – 6	GROUND	P2 – 4	GROUND
W1	BROWN	P1 – 7		P2 – 15	
W1	GRAY	P1 – 8		P2 – 8	

CPE to CPE female (NT7R93CA)

Table 33 "CPE to CPE female DB15 to RJ48 adapter pin-out" (page 128) is the pin-out table for the CPE to CPE female DB15 to RJ48 adapter of the T1 to CSU Cable Kit.

Table 33
CPE to CPE female DB15 to RJ48 adapter pin-out

WIRE	COLOR	FROM	SIGNAL RJ48	TO	SIGNAL DB15F
W1	BLUE	P1 – 1	TIP IN	P2 – 1	TIP IN
W1	ORANGE	P1 – 2	RING IN	P2 – 9	RING IN
W1	BLACK	P1 – 3	NC	P2 – 2	NC
W1	RED	P1 – 4	RING OUT	P2 – 11	RING OUT
W1	GREEN	P1 – 5	TIP OUT	P2 – 3	TIP OUT
W1	YELLOW	P1 – 6	NC	P2 – 4	NC
W1	BROWN	P1 – 7	SIG1	P2 – 15	SIG1
W1	GRAY	P1 – 8	SIG2	P2 – 8	SIG2

Copyright © 2003-2010 Nortel Networks. All Rights Reserved.

Nortel Communication Server 1000

Mini-Carrier Remote Fundamentals

Release: 7.0
Publication: NN43001-557
Document revision: 04.01
Document release date: 4 June 2010

Copyright © 2003-2010 Nortel Networks. All Rights Reserved.

While the information in this document is believed to be accurate and reliable, except as otherwise expressly agreed to in writing NORTEL PROVIDES THIS DOCUMENT "AS IS" WITHOUT WARRANTY OR CONDITION OF ANY KIND, EITHER EXPRESS OR IMPLIED. The information and/or products described in this document are subject to change without notice.

Nortel, Nortel Networks, the Nortel logo, and the Globemark are trademarks of Nortel Networks.

All other trademarks are the property of their respective owners.

To provide feedback or to report a problem in this document, go to www.nortel.com/documentfeedback.

www.nortel.com