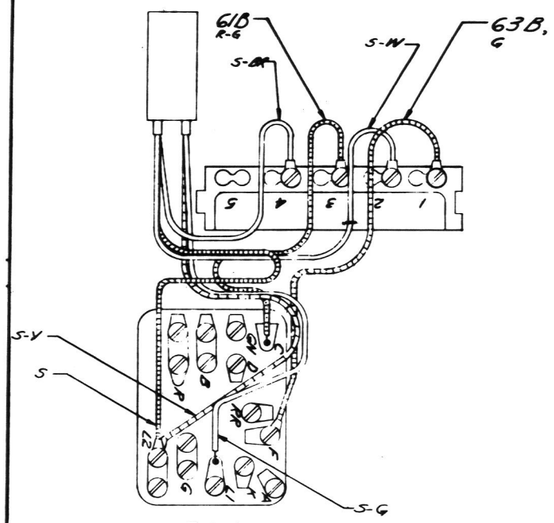

FIG. 1

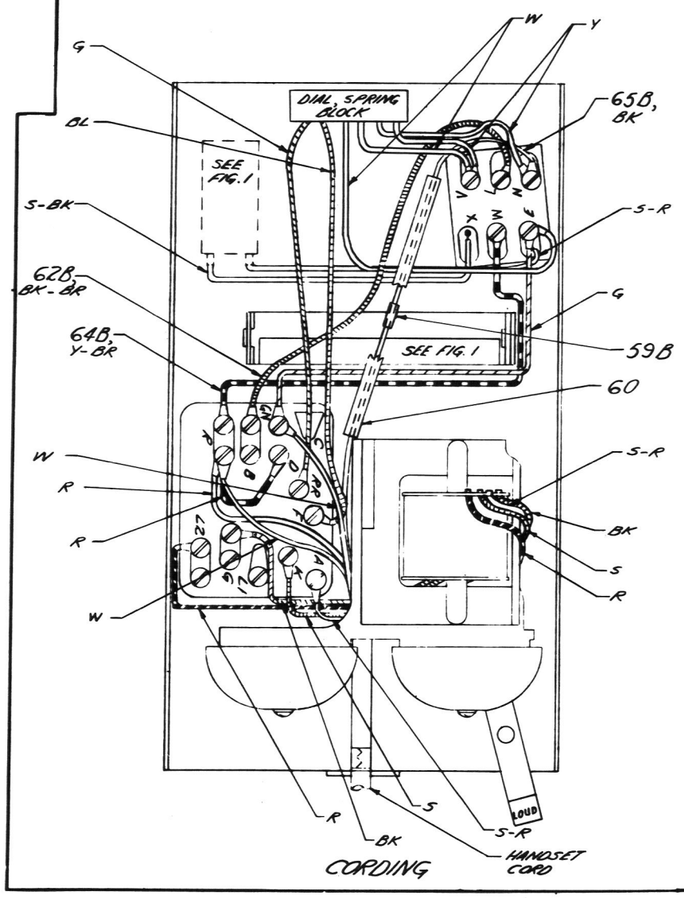

CORDING

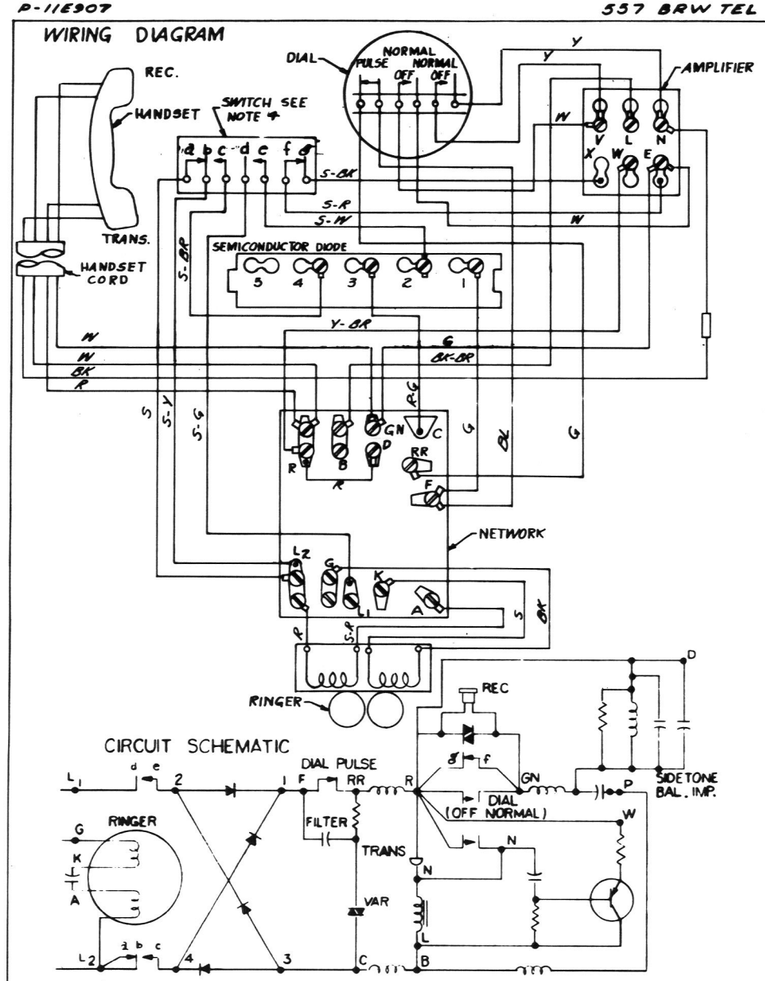

PRINTED IN U.S.A.

PRINT BLACK

TABLE OF CONNECTIONS

CONNECTIONS IN SET

CLASS OF SERVICE	LINE RING	LINE TIP	LINE GND	R	RINGER BK	RINGER S	RINGER S-R
BRIDGED	L_2	L_1	G	L_2	L_1	K	A
RING PARTY	L_2	L_1	G	L_2	G	K	A
TIP PARTY EXCEPT DIAL MESSAGE RATE	L_1	L_2	G	L_2	G	K	A
TIP PARTY DIAL MESSAGE RATE*	L_1	L_2	G	K	G	B	B
AUTOMATIC TICKETING*	L_1	L_2	G	B	B	K	G

CONNECTIONS FOR BRIDGED AND RING PARTIES ARE FOR FLAT AND MESSAGE RATE SERVICE.

* TRANSFER SLATE SWITCH LEAD FROM (L2) TO (A) TERMINAL ON NETWORK.

NOTES:

1. FOR MANUAL SERVICE:

   REPLACE DIAL WITH APPARATUS BLANK AND TRANSFER GREEN SEMI-CONDUCTOR DIODE LEAD TO (RR) TERMINAL ON NETWORK.

2. TO PERMANENTLY SILENCE RINGER:

   FOR BRIDGED, RING PARTY AND TIP PARTY EXCEPT DIAL MESSAGE RATE SERVICES, TRANSFER BLACK RINGER LEAD TO (K) TERMINAL ON NETWORK.

   FOR TIP PARTY DIAL MESSAGE RATE SERVICE, TRANSFER SLATE-RED RINGER LEAD TO THE (K) TERMINAL. BLACK LEAD TO (G) AND SLATE LEAD TO (B) MUST REMAIN CONNECTED FOR PARTY IDENTIFICATION.

   FOR AUTOMATIC TICKETING, TRANSFER (BK) RINGER LEAD TO THE (K) TERMINAL.

3. RINGER CUT-OFF CONTROL BY CUSTOMER:

   BEND STOP NEXT TO DETENT ON RINGER VOLUME CONTROL SO THAT IT COMPLETELY CLEARS THE RIM OF THE RINGER FRAME. THIS PROVIDES A FURTHER POSITION ON VOLUME CONTROL WHICH PREVENTS ARMATURE MOVEMENT.

4. WHEN THE HANDSET IS REMOVED FROM THE CRADLE, CONTACT gf BREAKS LAST.

5. WHEN SET IS INSTALLED ON LOOPS RESULTING IN UNUSUALLY HIGH SIDE TONE, TRANSFER RED LEAD FROM (D) TERMINAL TO (R) TERMINAL.

NOTES:

1. IN WIRING DIAGRAM, CONNECTIONS LABELED ◆ SHALL BE SOLDERED PER 50016 METHOD C.
2. SET TO BE WIRED AS SHOWN IN WIRING DIAGRAM (RING PARTY, TIP PARTY EXCEPT DIAL MESSAGE RATE).
3. SEE STOCK LIST A-579258 FOR INFORMATION CONCERNING LEADS, ITEM 61B, 62B, 63B, 64B, 65B, ALSO ITEMS 59B & 60.

CODE	WIRING DIAGRAM AND CIRCUIT SCHEMATIC SAME AS FOR
557 BR TYPE	557 BRW

MATERIAL FOR P-11E907

WHITE SULPHITE BOND PAPER 20 LB. (500 SHEETS 17X22)

REQ	IDENTIFICATION NO.	DESCRIPTION	REF DESIG	NOTE	ITEM

STOCK LIST

SUPPLEMENTARY DRAWINGS

SIGNIFICANCE OF SYMBOLS AND ITEM NUMBER SUFFIXES

S—PARTIAL ASSEMBLIES OR OTHER DRAWINGS WITH STOCK LISTS
D—PARTS SHIPPED LOOSE
ITEMS NOT SPECIFIED AS "S" OR "D" PARTS IN ITEM COLUMN ARE INDIVIDUAL ("A") PARTS.

WHERE ITEMS HAVE REFERENCE DESIGNATIONS, THEY MAY BE USED IN LIEU OF ITEM NUMBERS ON THE DELINEATION.

✓ IN "REQ" COLUMN OF STOCK LIST—QUANTITY AS REQUIRED
✓ IN "REQ" COLUMN OF SUPPLEMENTARY DWG LIST—DRAWING REQUIRED
⊗ DENOTES MANUFACTURE DISCONTINUED
⊗ DENOTES MANUFACTURE LIMITED
AD—DENOTES APPARATUS DESIGN DRAWINGS

DIMENSIONS UP TO AND INCLUDING 72 INCHES EXPRESSED IN INCHES. NON-LIMITED DIMENSIONS, OTHER THAN SIZE OF RAW MATERIAL, SHALL BE HELD WITHIN FRACTIONAL DECIMAL

DWG SIZE 6S

A-579260

USED ON BWE

557 TYPE TELEPHONE SETS CORDING, WIRING DIAGRAM, SCHEMATIC & CIRCUIT LABEL P-11E907

SCALE NONE

WESTERN ELECTRIC CO. INC

CDS

A-579260

A-579260

REDUCE TO 8½ IN.

A-579260