P-26E460

638CW & 639DW TYPE TELEPHONESET

ISSUE -3

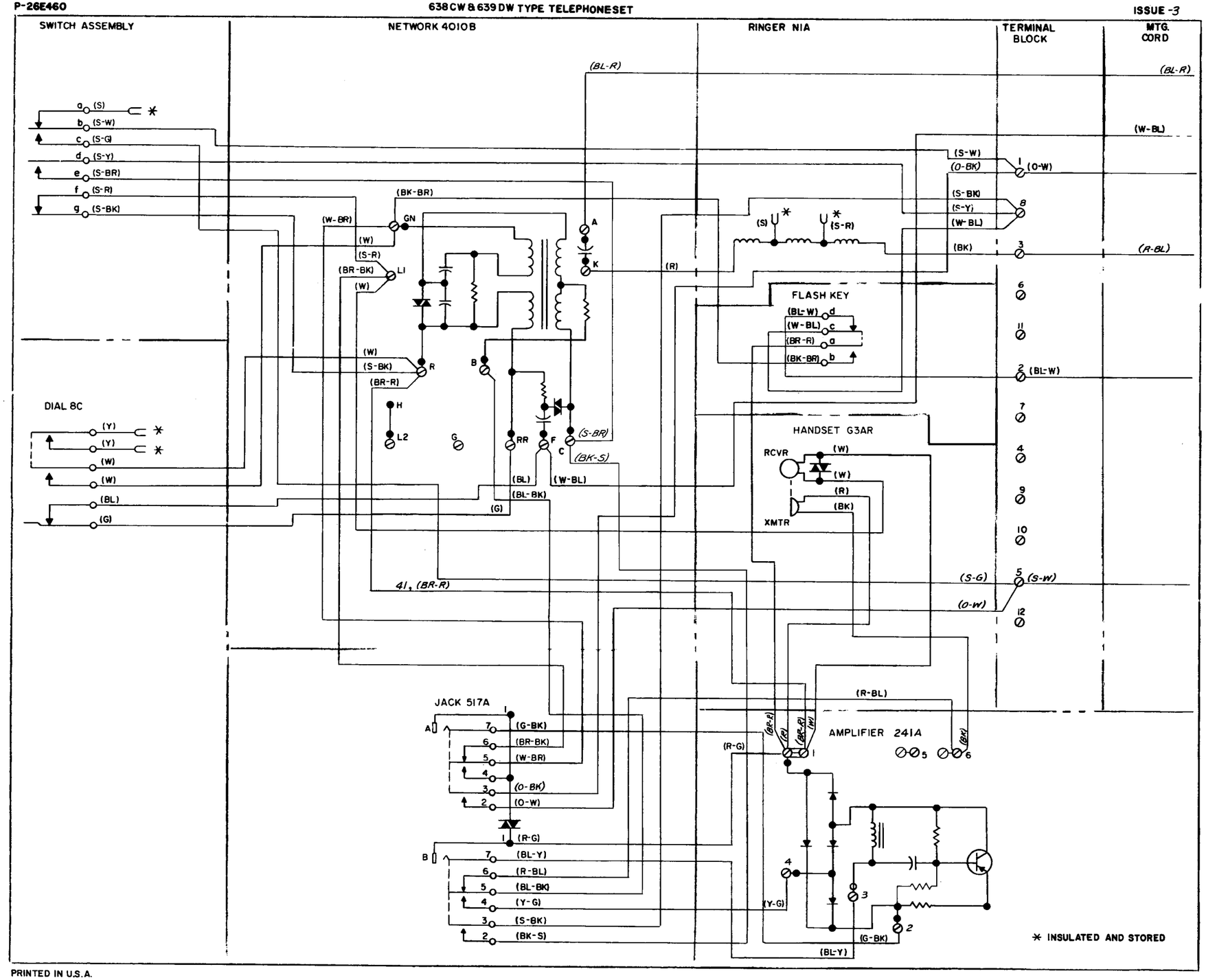

NOTES:

1. ITEM NUMBERS REFERRED TO ARE SHOWN ON P-82C000-83C999

REDUCE TO 8½ INCHES

P-26E460

DRAWN R.E. INGLEBRET	
DRAWN R.E. INGLEBRET	
3-6-63	ISSUE 1C
DRAWN R.E.	RLW
ENG WECO	
3-13-63	ISSUE-1
CHANGED: BK-S & S-BR LEADS WERE CONNECTED TO TERM. 7 OF TERM. BLOCK INSTEAD OF TO TERM. C OF NET. REMOVED: O-Y LEAD BET. TERM. 7 OF TERM. BLOCK & TERM. C OF NET.	
DRAWN	RLW
ENGR. WECO	
ENGR. BTL	
3-20-63	2
CHANGED: VARIOUS CONNECTIONS TO AGREE WITH LATEST DESIGN. PRODUCT NOT AFFECTED.	
DRAWN	RLW
ENGR. WECO	
ENGR. BTL	
4-9-63	3
ADDED: "241A" IN AMP. SECT.; MIDDLE RES IN AMP. SECT.; CHANGED: IN AMP. SECT. SCREW TERM. DESIGS. 4,3&2 WERE 2,4&3 RESP.; SCREW TERMS. 5&6 WERE SINGLE TERMS.; ISSUE OF CIRCUIT LABEL WAS 1	
LETTERED	591427A1C
6-14-63	* 4
CHANGED: O-BK LEAD FROM 517A JACK WAS V-O; ISS. NO. OF LABEL WAS 2	
PUB	591522-A1
8-13-63	5

P-26E460

FOR CHARGES REFER TO DFTG CARD INDEX

638C & 639D Tel. Set	P-580110
USED ON	DWG

LABEL, CIRCUIT AND CONNECTING DIAGRAM

SCALE

WESTERN ELECTRIC CO. INC. ENGINEER OF MANUFACTURE

MATERIAL: WHITE SULPHITE BOND PAPER, 20LB (500 SHEETS 17x22)

UNLESS OTHERWISE SPECIFIED, ALL DIMENSIONS ARE IN INCHES. NONLIMITED DIMENSIONS OTHER THAN SIZE OF RAW MATERIAL SHALL BE HELD AS FOLLOWS WHEN EXPRESSED:
TO 2 DECIMAL PLACES ± AS ANGLES ±
TO 3 DECIMAL PLACES ±
FOR GENERAL INFORMATION ON SYMBOLS AND NOTES REFER TO MANUFACTURING STANDARD 18.003, PART 2, SECTION 227.

DWG SIZE 6S

CDS P-26E460

PRINTED IN U.S.A.

PRINT BLACK