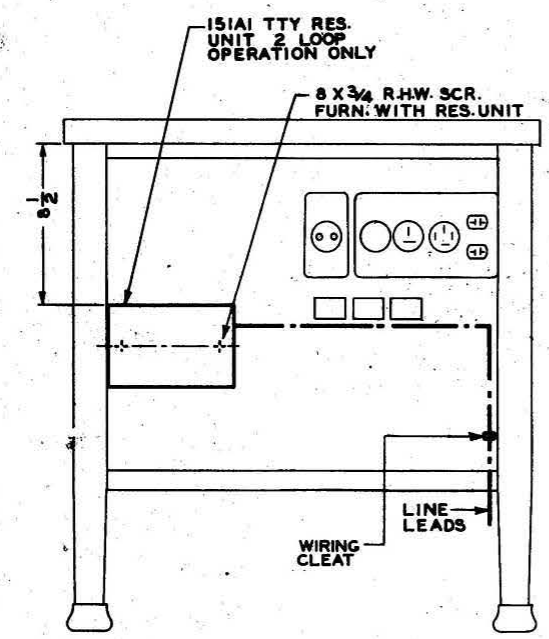

FRONT VIEW OF TABLE FOR EMERGENCY TTY

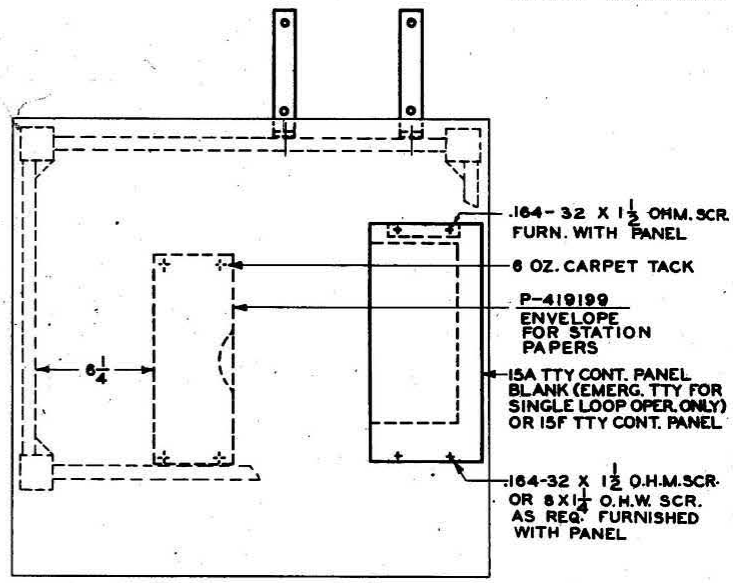

PLAN VIEW OF TABLE FOR REGULAR AND EMERGENCY TTY

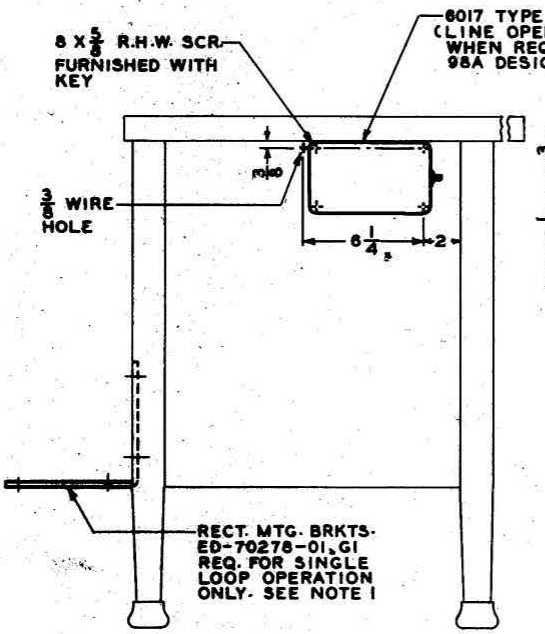

LEFT END VIEW OF TABLE FOR REGULAR TTY

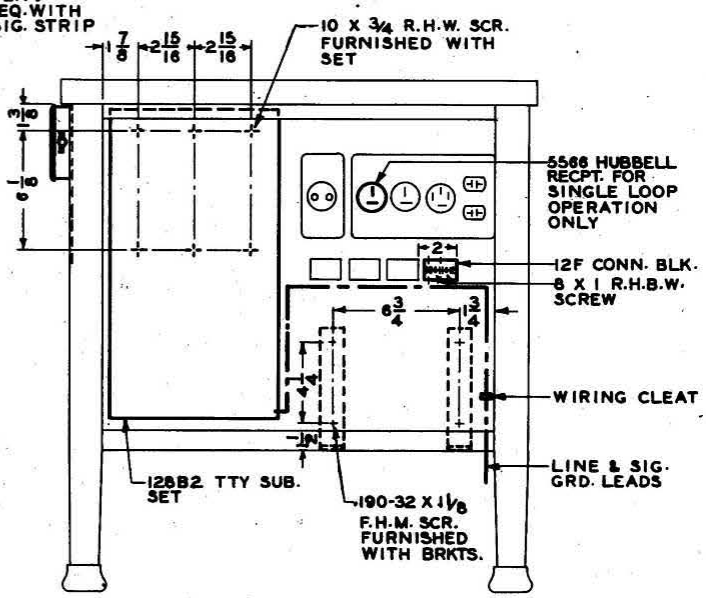

FRONT VIEW OF TABLE FOR REGULAR TTY

NOTES:
1. TABLE SHELF SHALL BE CUT AS REQUIRED TO PASS RECTIFIER CORDS BETWEEN SHELF AND REAR PANEL OF TABLE.

15 TTY-15 N TABLE
PRIVATE LINE SERVICE
WITH 128B2 TTY SUB SET