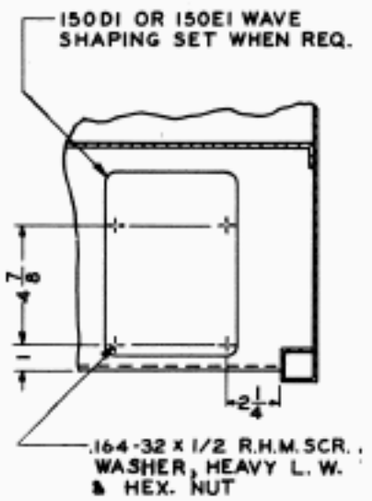

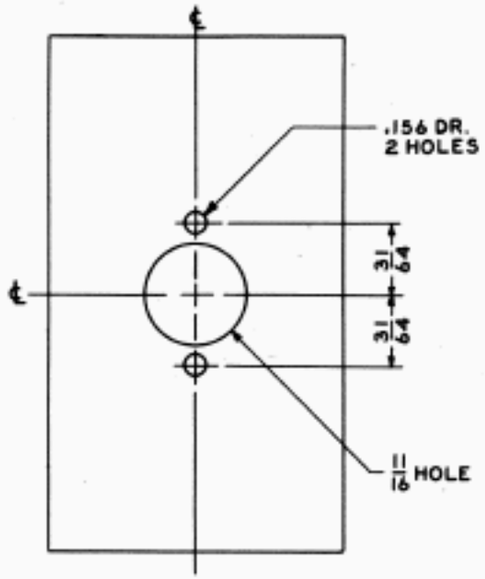

MODIFICATION OF METAL PLATE
(FURNISHED WITH TABLE)
TO DRILL FOR KS-8585,L12
PLUG
FIG. 2

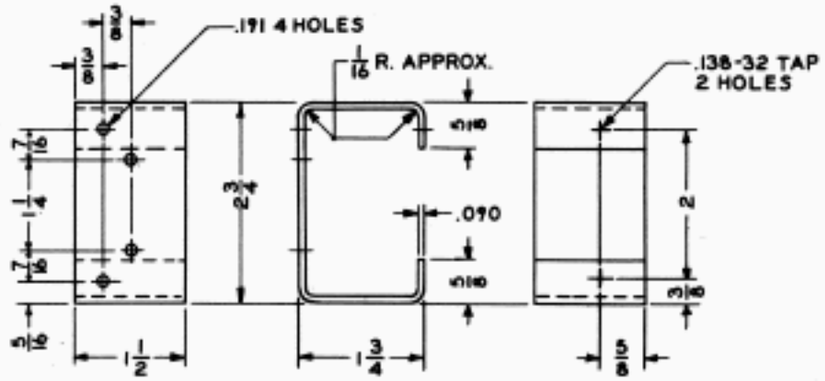

.090 STRIP STEEL, SPEC 57612, HRPOCQ
BRACKET FOR MTG. RELAY
FIG. 3

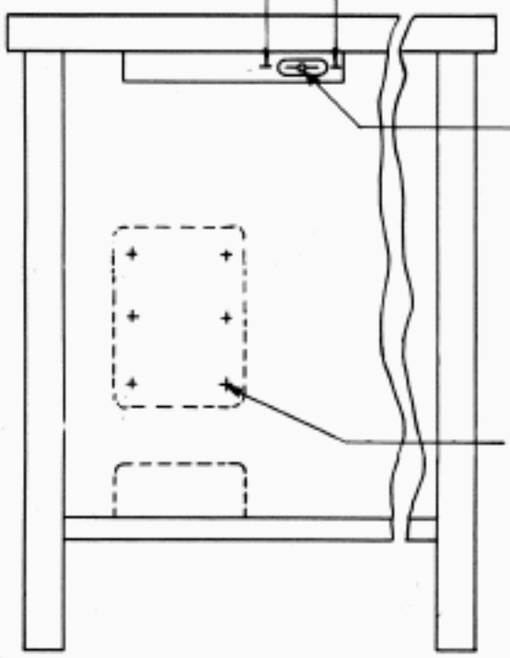

PARTIAL FRONT VIEW

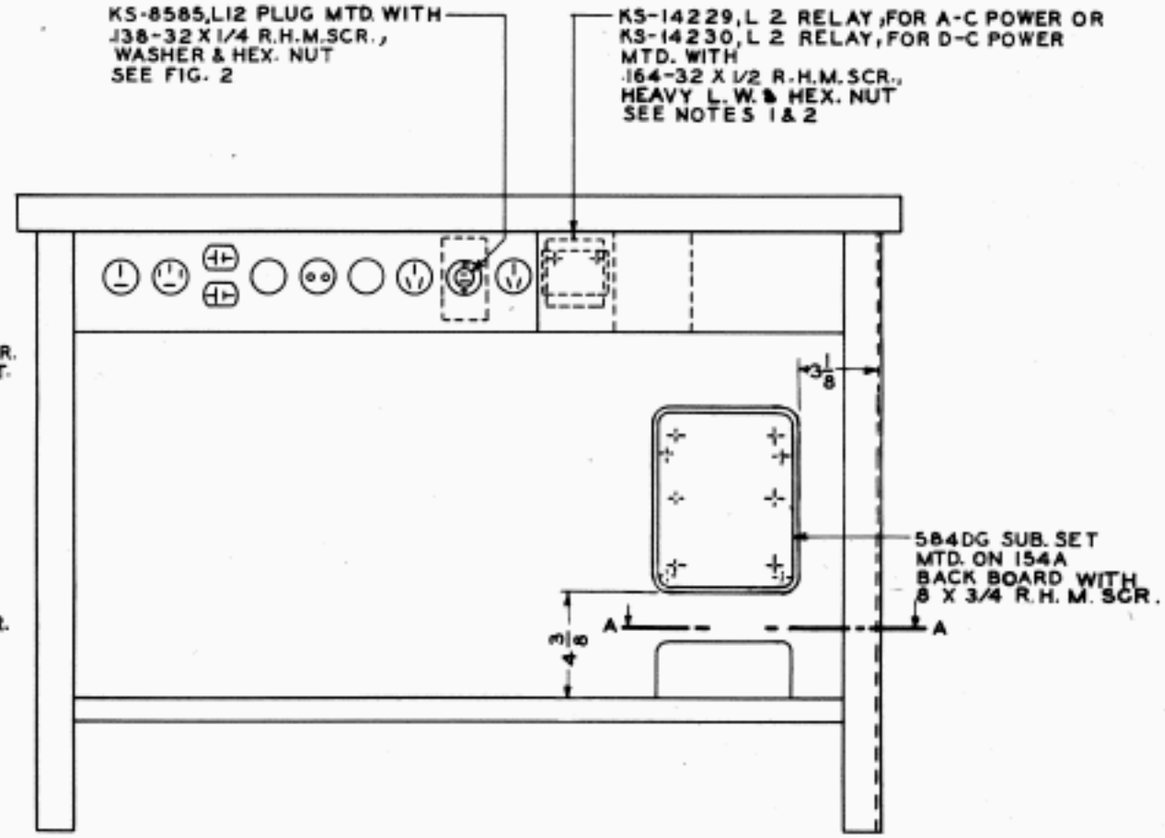

REAR VIEW - REAR PANEL REMOVED

FIG. 1

NOTES:
1. THE KS-14230 RELAY CAN BE OBTAINED BY MODIFYING A WARD LEONARD K-42220 RELAY. THE MODIFICATION CONSISTS OF DISCARDING THE HOUSING AND MOUNTING THE RELAY ON A BRACKET PER FIG. 3; THE BRACKET TO BE PROVIDED LOCALLY.
2. THE KS-14229 RELAY CAN BE OBTAINED BY MODIFYING A WARD LEONARD KS-42219 RELAY. THE MODIFICATION CONSISTS OF DISCARDING THE HOUSING AND MOUNTING THE RELAY ON A BRACKET PER FIG. 3; THE BRACKET TO BE PROVIDED LOCALLY.

ATTENDED TWX SERVICE
STATION ASSEMBLY
XRT205 OR XRT206 TTY TABLE

PRINTED IN U.S.A. COPYRIGHT, 1951 BY AMERICAN TELEPHONE AND TELEGRAPH CO.