PLANS USED	

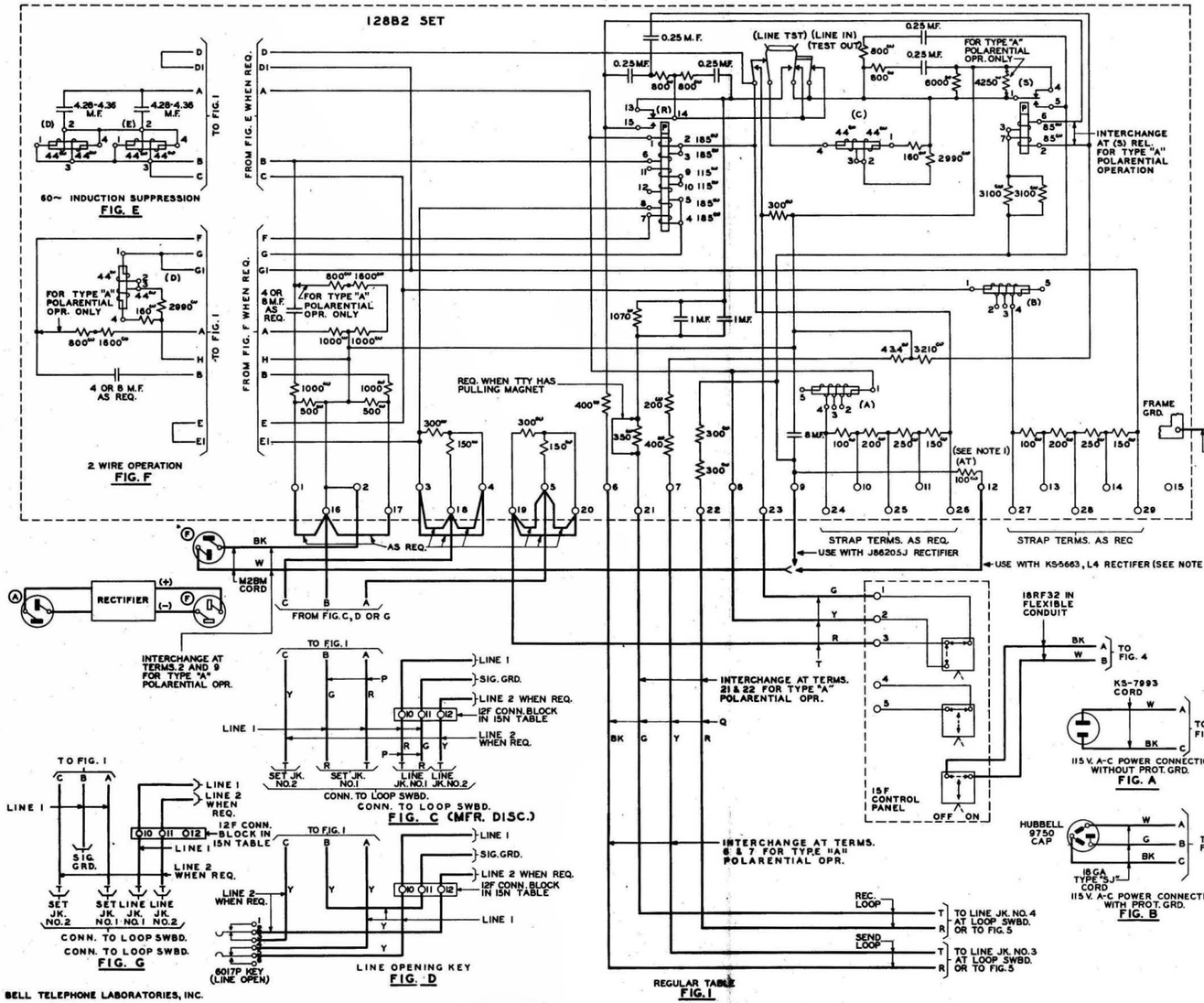

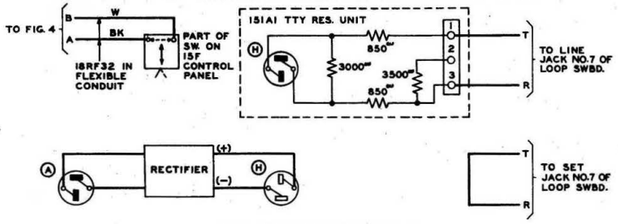

TEST EQPT. AT EMERGENCY TABLE
FIG. 2

NOTES:
1. SOME 128B2 SUBSCRIBER SETS ARE NOT EQUIPPED WITH THE (AT) RESISTANCE, AND WHEN A POWER CORD IS CONNECTED TO TERMINAL 12, A CHECK SHOULD BE MADE TO INSURE THAT RESISTANCE (AT) IS PRESENT.

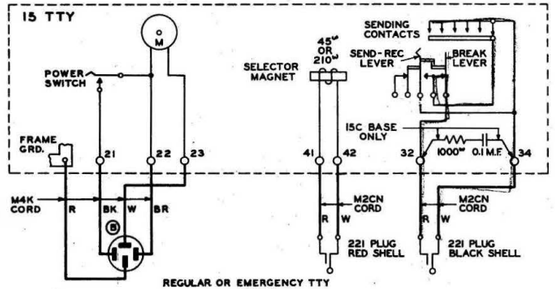

REGULAR OR EMERGENCY TTY
FIG. 3

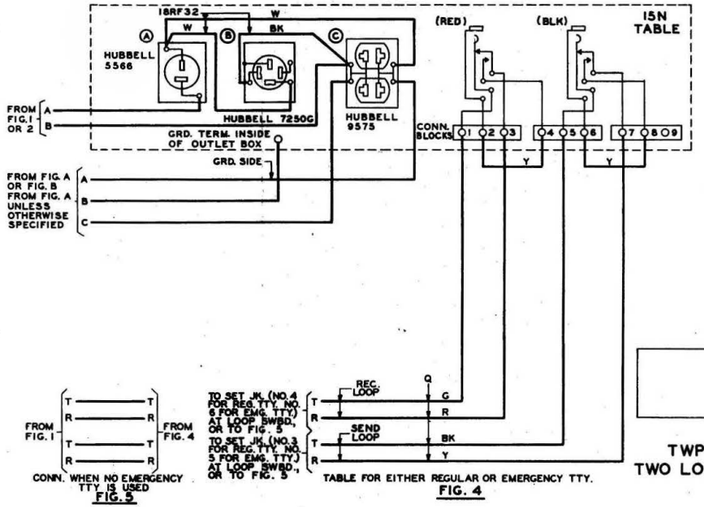

CONN. WHEN NO EMERGENCY TTY IS USED
FIG. 5

TABLE FOR EITHER REGULAR OR EMERGENCY TTY.
FIG. 4

STATION IDENTIFICATION

15 TTY-15N TABLE
TWP SERVICE-128B2 TTY SUB SET
TWO LOOP OPERATION-MAGNET RECEIVING

BELL TELEPHONE LABORATORIES, INC.
PRINTED IN U.S.A.