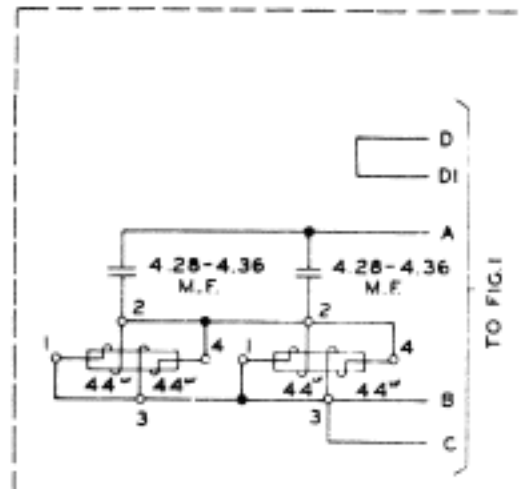


60 ~ INDUCTION SUPPRESSION

FIG. E

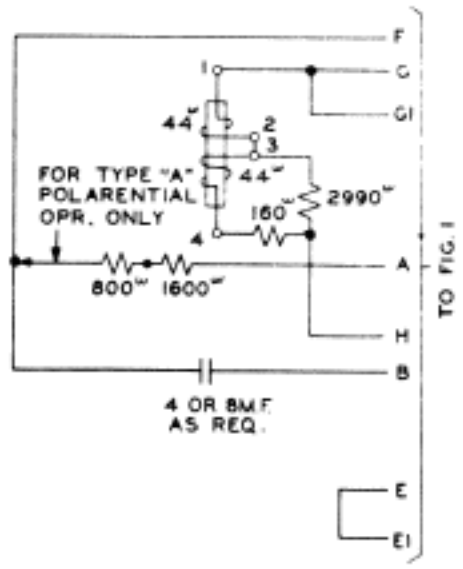


2 WIRE OPERATION

FIG. F

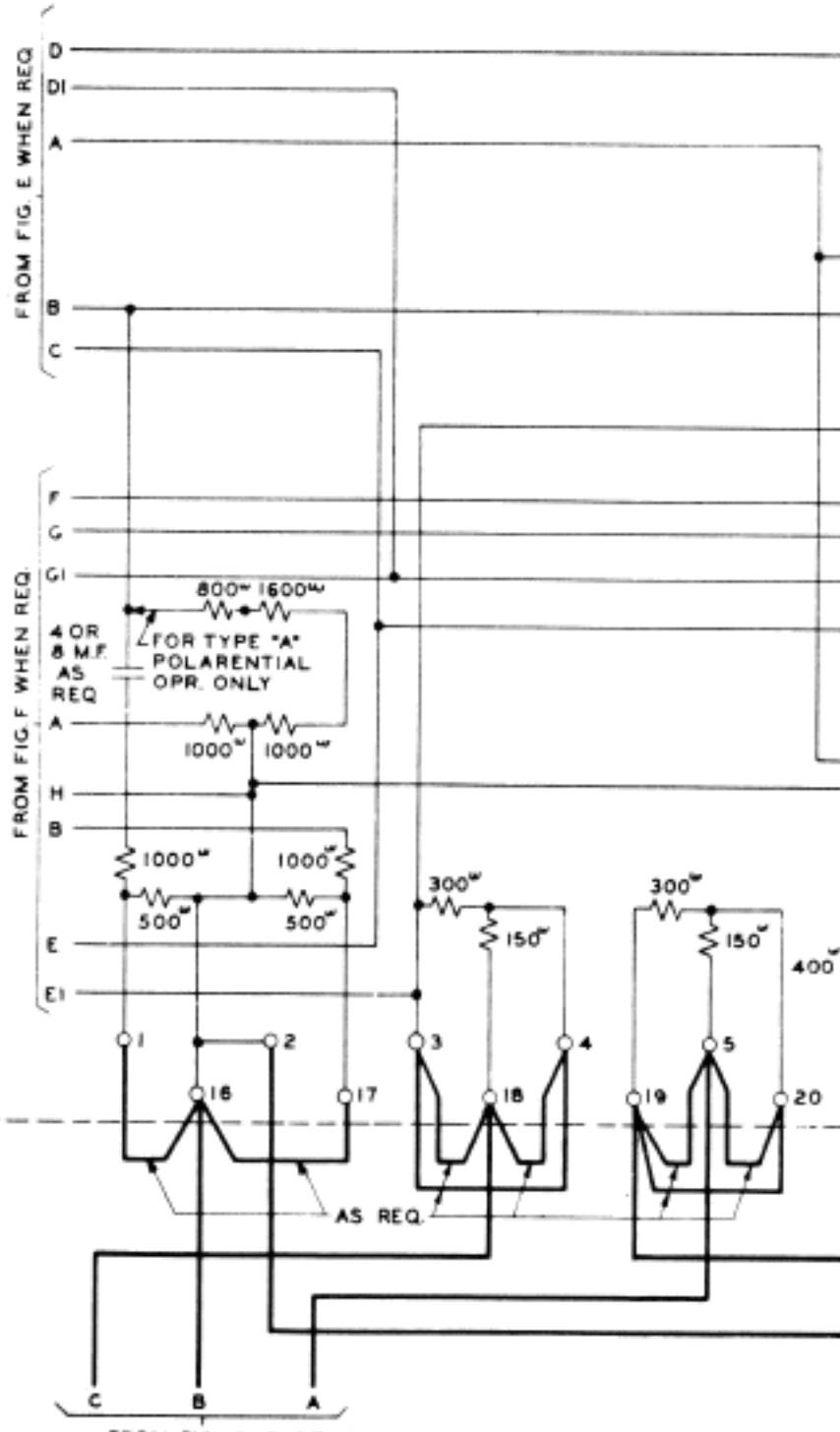


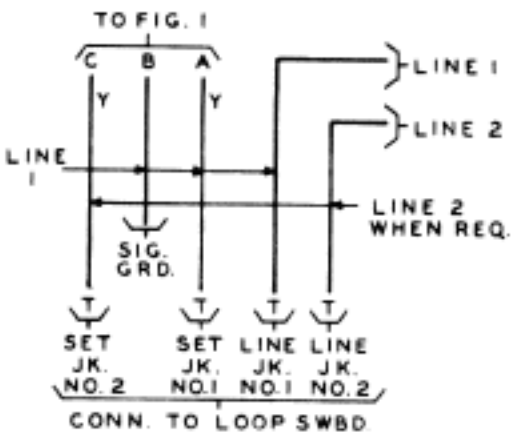


CONN. TO LOOP SWBD.

FIG. J

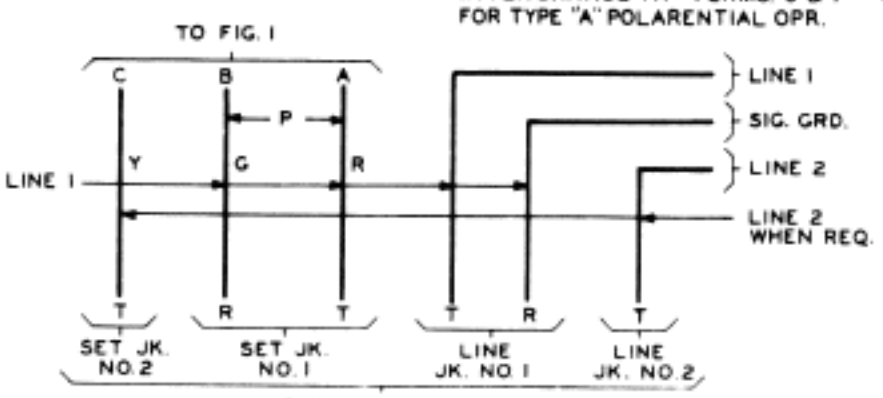


CONN. TO LOOP SWBD.

FIG. C (MFR. DISC.)

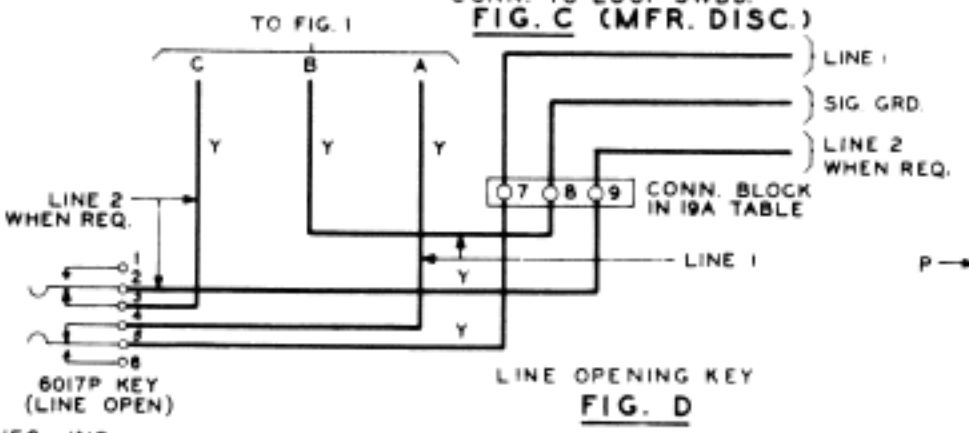


LINE OPENING KEY

FIG. D

BELL TELEPHONE LABORATORIES, INC.

PRINTED IN U.S.A.

COPYRIGHT, 1958, BY AMERICAN TELEPHONE AND TELEGRAPH COMPANY

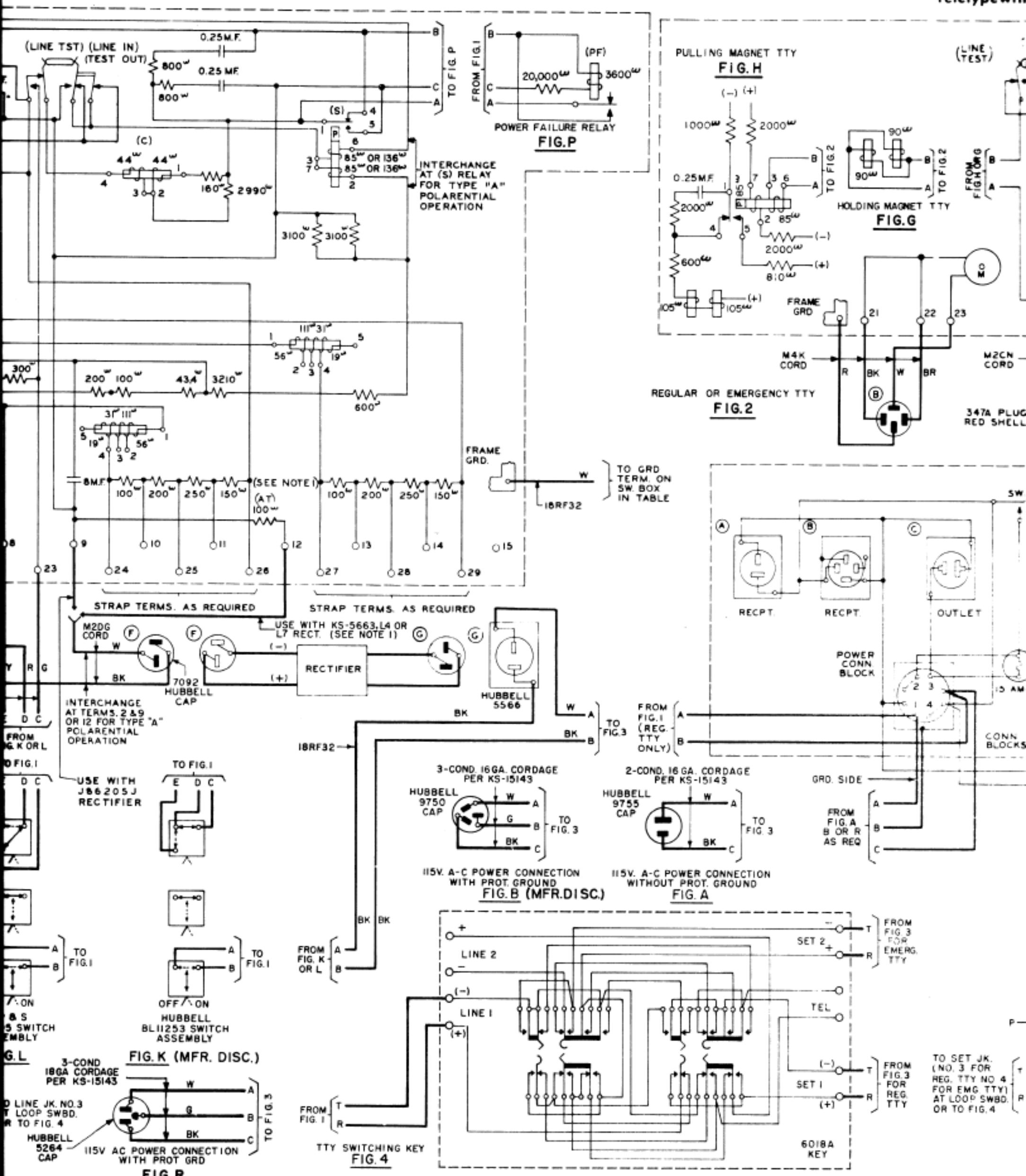
(LINE TST) (LINE IN) (TEST OUT)
0.25 M.F.
800
0.25 MF.
800
TO FIG. P
FROM FIG. 1
(PF)
20,000
3600
POWER FAILURE RELAY
FIG. P
(S)
(C)
44
44
160
2990
85 OR 136
85 OR 136
INTERCHANGE AT (S) RELAY FOR TYPE "A" POLARENTIAL OPERATION
3100
3100
111
31
56
19
300
200
100
43.4
3210
600
31
111
19
56
8 M.F.
100
200
250
150
(SEE NOTE 1)
(AT) 100
100
200
250
150
FRAME GRD.
W
TO GRD TERM. ON SW. BOX IN TABLE
18RF32
STRAP TERMS. AS REQUIRED
STRAP TERMS. AS REQUIRED
M2DG CORD
USE WITH KS-5663, L4 OR L7 RECT. (SEE NOTE 1)
RECTIFIER
7092 HUBBELL CAP
HUBBELL 5566
INTERCHANGE AT TERMS. 2 & 9 OR 12 FOR TYPE "A" POLARENTIAL OPERATION
FROM FIG. K OR L
TO FIG. 1
USE WITH J86205J RECTIFIER
TO FIG. 1
TO FIG. 1
TO FIG. 1
ON
& S
5 SWITCH
EMBLY
OFF ON
HUBBELL BL11253 SWITCH ASSEMBLY
FIG. K (MFR. DISC.)
3-COND 18GA CORDAGE PER KS-15143
LINE JK. NO. 3
LOOP SWBD.
TO FIG. 4
HUBBELL 5264 CAP
115V AC POWER CONNECTION WITH PROT GRD
FIG. R
TO FIG. 3
18RF32
FROM FIG. K OR L
3-COND. 16 GA. CORDAGE PER KS-15143
HUBBELL 9750 CAP
TO FIG. 3
115V. A-C POWER CONNECTION WITH PROT. GROUND
FIG. B (MFR. DISC.)
2-COND. 16 GA. CORDAGE PER KS-15143
HUBBELL 9755 CAP
TO FIG. 3
115V. A-C POWER CONNECTION WITHOUT PROT. GROUND
FIG. A
PULLING MAGNET TTY
FIG. H
1000
2000
0.25 M.F.
2000
600
105
105
TO FIG. 2
90
90
TO FIG. 2
HOLDING MAGNET TTY
FIG. G
(LINE TEST)
FROM FIG. H OR G
FRAME GRD
M4K CORD
M2CN CORD
REGULAR OR EMERGENCY TTY
FIG. 2
347A PLUG RED SHELL
RECPT.
RECPT.
OUTLET
POWER CONN BLOCK
15 AM
FROM FIG. 1 (REG. TTY ONLY)
CONN BLOCKS
GRD. SIDE
FROM FIG. A B OR R AS REQ
LINE 2
LINE 1
SET 2
SET 1
TEL
FROM FIG. 3 FOR EMERG. TTY
FROM FIG. 3 FOR REG. TTY
FROM FIG. 1
TTY SWITCHING KEY
FIG. 4
6018A KEY
TO SET JK. (NO. 3 FOR REG. TTY NO. 4 FOR EMG. TTY) AT LOOP SWBD. OR TO FIG. 4

| PLANS USED | |
|---|---|
| | |
| | |
| | |
| | |

19 TTY

PULLING MAGNET TTY
FIG. H

HOLDING MAGNET TTY
FIG. G

REGULAR OR EMERGENCY TTY
FIG. 2

19A TABLE

REQ. WITH MOT. GEN.
FIG. M (MFR. DISC.)

REQ. WITH RECT.
FIG. N

EQUIPMENT FOR EITHER REGULAR OR EMERGENCY TTY
FIG. 3

POWER CONNECTION
PROT. GROUND
FIG. A

NOTES:
1. SOME 128B2 SUBSCRIBER SETS DO NOT INCLUDE THE (AT) RES., AND WHEN THE KS-5663,L4 OR L7 RECTIFIER IS USED A CHECK SHOULD BE MADE TO INSURE THAT THE (AT) RESISTANCE IS PRESENT.

STATION IDENTIFICATION

# 19 TTY — 19A TABLE
# TWP SERVICE — 128B2 TTY SUB SET
# SINGLE LOOP OPERATION
# EMERGENCY TTY OPTIONAL