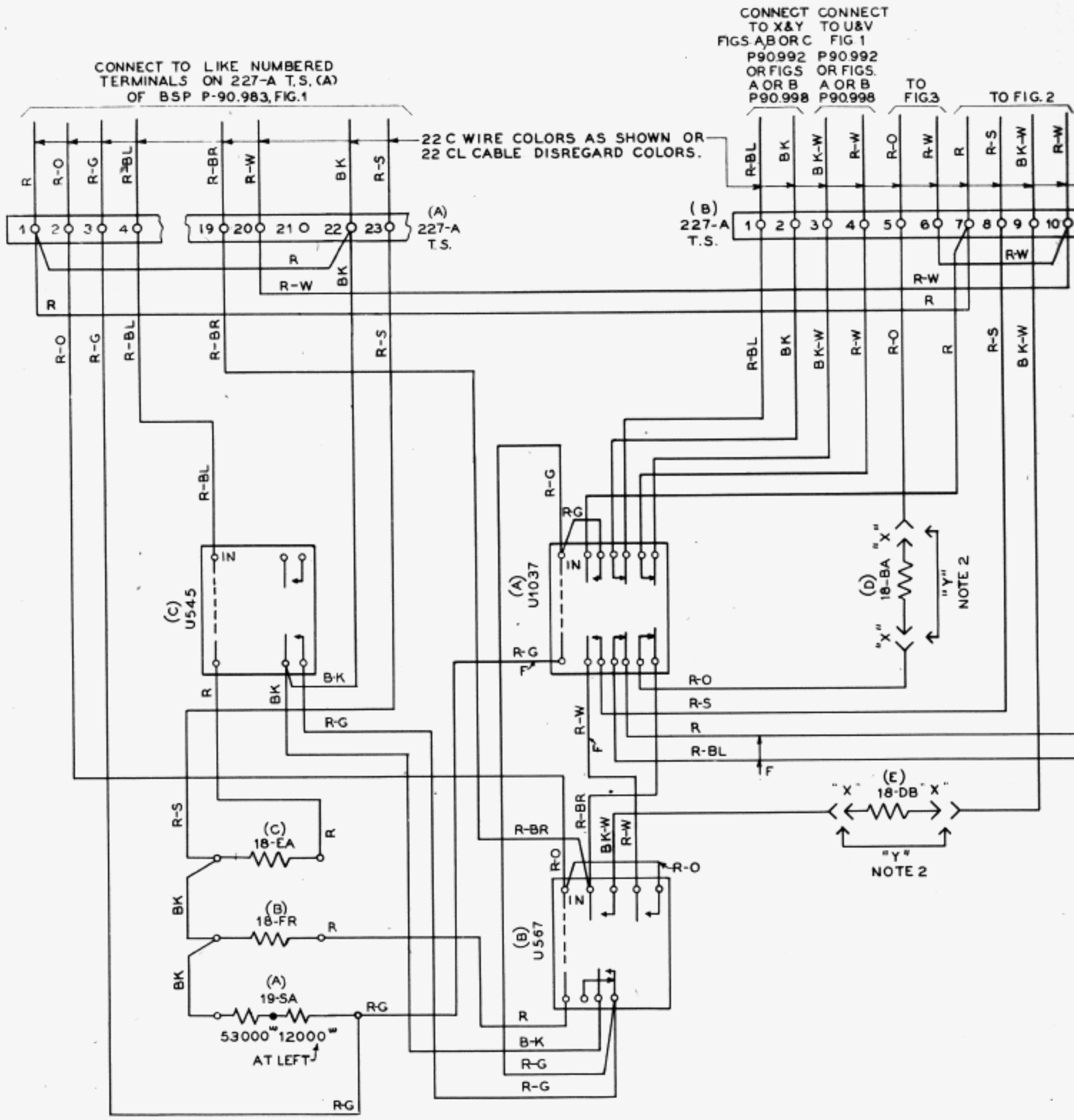
CONNECT TO LIKE NUMBERED TERMINALS ON 227-A T.S. (A) OF BSP P-90.983, FIG.1
CONNECT TO X&Y FIGS. A, B OR C P90.992 OR FIGS A OR B P90.998
CONNECT TO U&V FIG 1 P90.992 OR FIGS. A OR B P90.998
TO FIG.3
TO FIG. 2
22 C WIRE COLORS AS SHOWN OR 22 CL CABLE DISREGARD COLORS.
(A) 227-A T.S.
(B) 227-A T.S.
(C) U545
(A) U1037
(B) U567
(C) 18-EA
(B) 18-FR
(A) 19-SA
53000" 12000"
AT LEFT
(D) 18-BA
(E) 18-DB
"X"
"Y"
NOTE 2

FIG.1

Dist. Class. 600AC

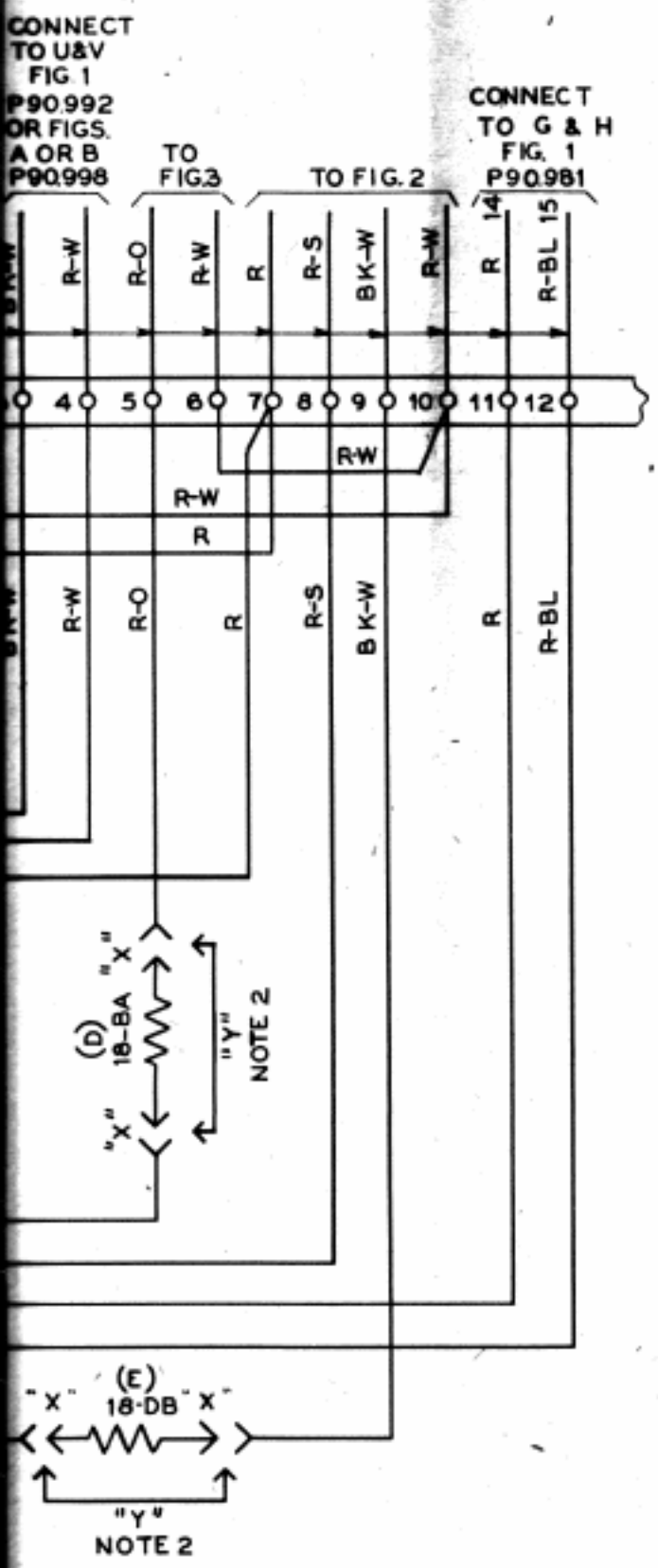

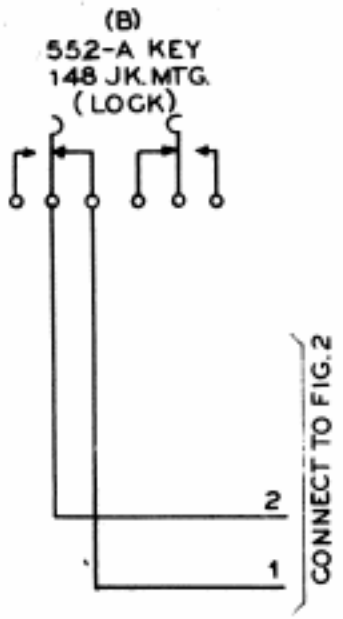

FIG. 4

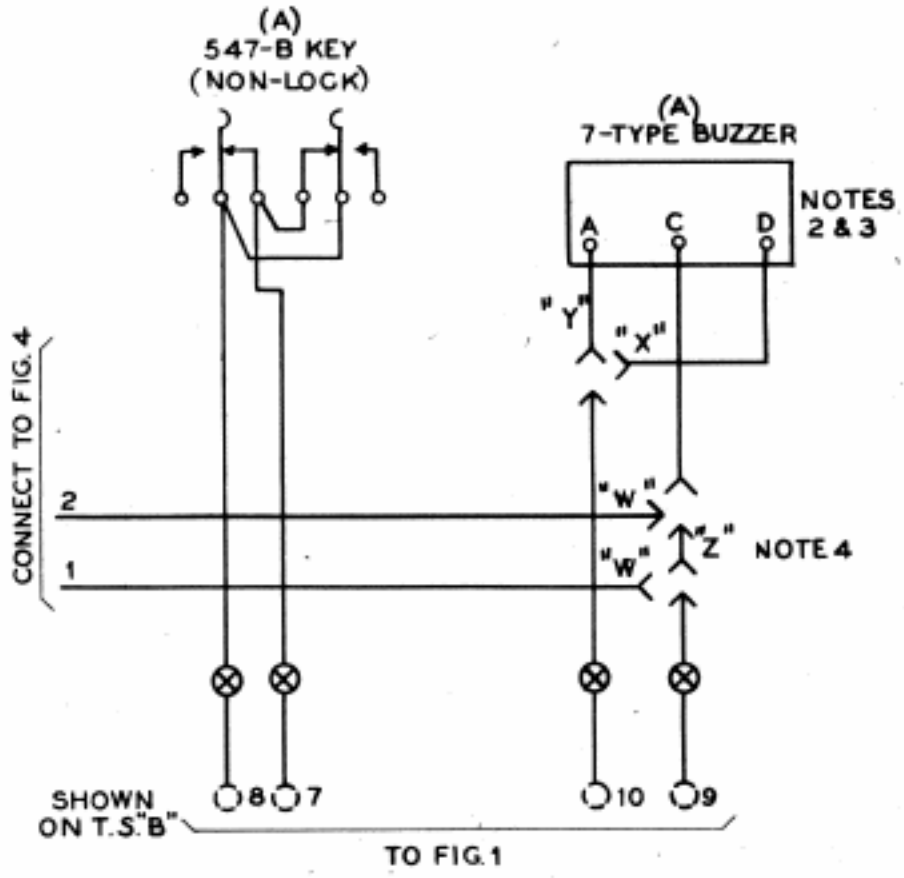

FIG. 2

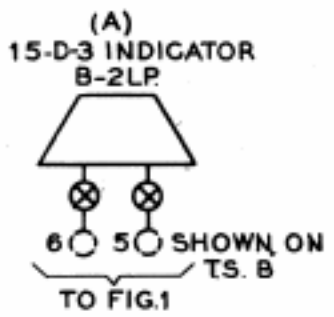

FIG. 3

NOTES

1. REPRODUCED FROM DWG. 21140-T-131
2. USE "X" WIRING AND APPARATUS FOR D.C. POWER OPERATION AND "Y" WIRING FOR A.C. POWER OPERATION.
3. USE 7-E BUZZER FOR 60 ~ A.C., 7-A FOR 25 ~ A.C., AND 7-F FOR D.C.
4. USE "W" WIRING IF KEY (B) IS REQUIRED, OTHERWISE USE "Z" WIRING.
5. ⊗ H.B. JONES NO. 10-141 TERM. STRIP OR EQUIVALENT ON TTY. TABLE.
6. USE 59D (115 ~) RESISTANCES FOR FIG. 7 OF BSP P90.983 WHEN THAT FIGURE IS USED.
7. WIRING NOT OTHERWISE SPECIFIED TO BE 22C.
8. SCHEMATIC SHOWN ON P90.973 . EQUIPMENT SHOWN ON 21140-ED-131

64-C-1 SELECTOR SYSTEM

APPLIQUE CIRCUIT TO PERMIT DISCONNECTION & CONNECTION OF TTY. DISABLES ASSOCIATED CALLING ARRANGEMENT PER P90.981 WHEN TTY IS DISCONNECTED TO BE USED WITH P90.983 WIRING