MAYBE P91.906

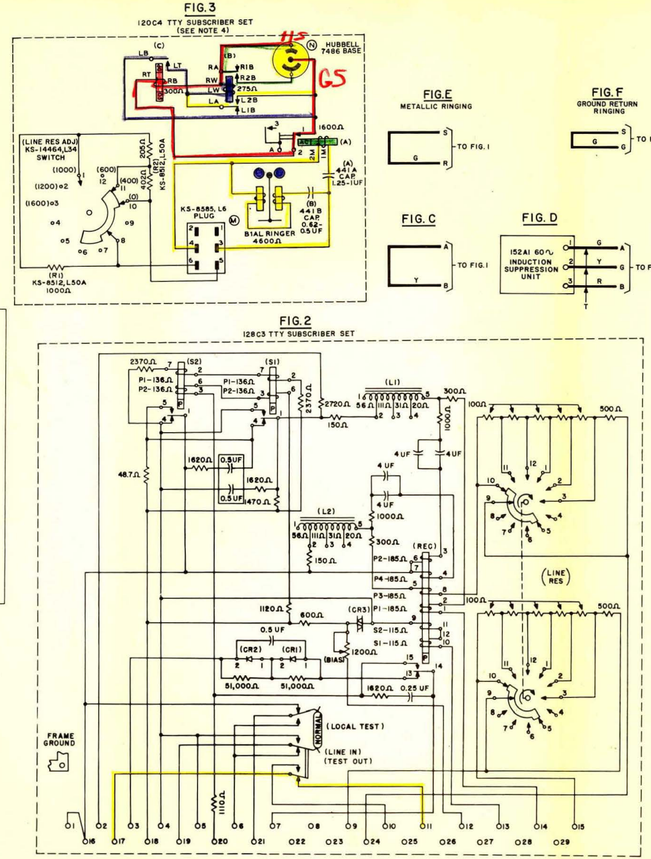

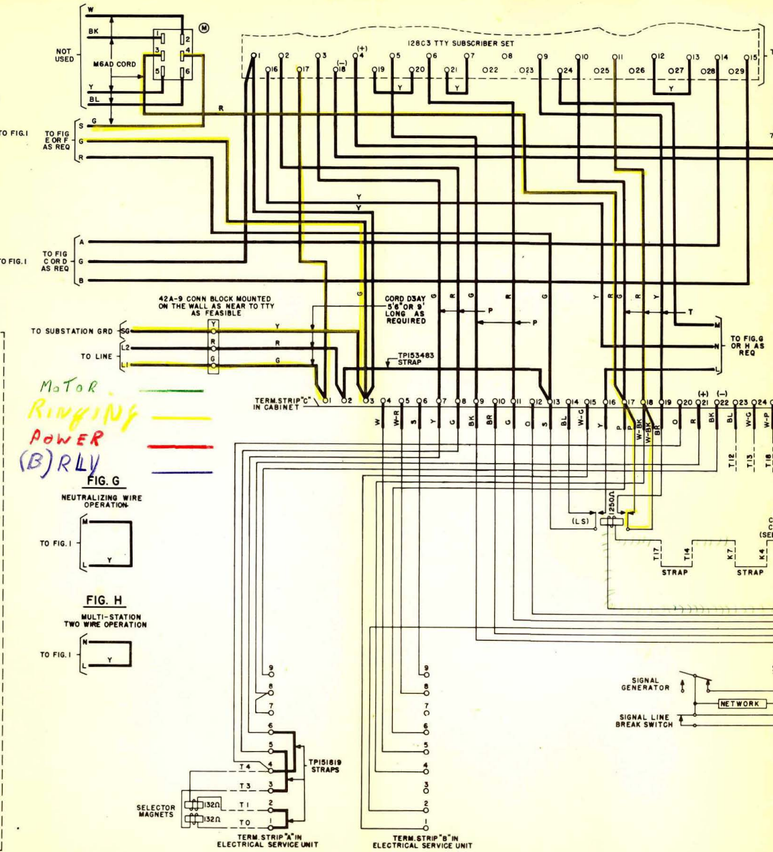

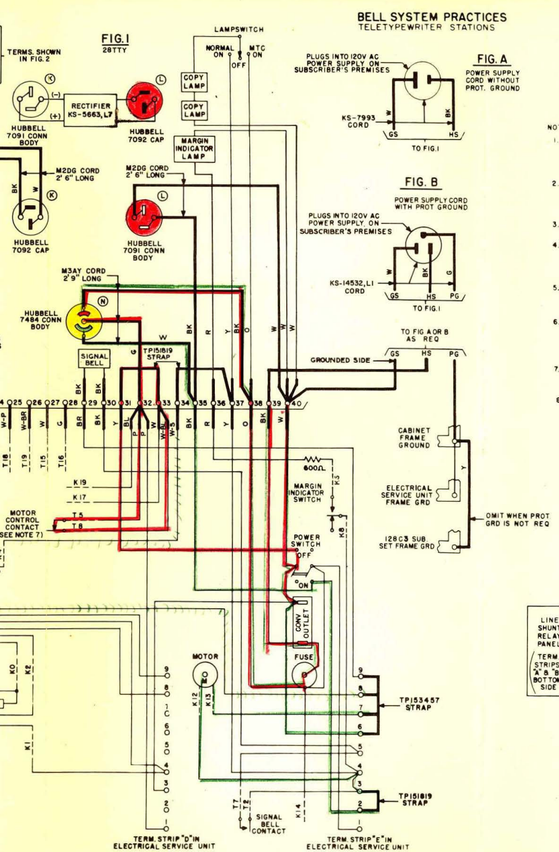

NOTES:

1. BROKEN LINES T2 INDICATE LEADS CARRIED THROUGH CORRESPONDINGLY NUMBERED CONTACTS OF PLUG AND SOCKET CONNECTORS. T INDICATES TYPING UNIT CONNECTOR; K, KEYBOARD.
2. ▬▬ INDICATES CONNECTIONS TO BE ADDED OR CHECKED FOR THEIR EXISTENCE. UNLESS OTHERWISE SPECIFIED ALL SUCH LEADS SHALL BE 22 GAUGE, BROWN, TYPE GS STATION WIRE PER AT&T SPEC. 7089.
3. ▬▬ INDICATES UNIT WIRING TO BE CONNECTED AS SHOWN.
4. THE 128C3 TTY SUBSCRIBER SET, THE 152A1 60~ INDUCTION SUPPRESSION UNIT (WHEN REQUIRED), THE KS-5663, L7 RECTIFIER, AND THE 120C4 TTY SUB. SET SHALL BE MOUNTED IN THE 28B TTY CABINET
5. PROVIDE FIG. C OR D, FIG. E OR F, AND FIG. G OR H AS REQUIRED.
6. THE 128C3 TTY SUBSCRIBER SET SHALL BE ADJUSTED AND STRAPPED FOR LINE CONDITIONS IN ACCORDANCE WITH B.S.P. INSTRUCTIONS IN THE "P" SERIES.
7. TP 153324 MOTOR CONTROL CONTACTS MUST BE PROVIDED WHICH ARE NORMALLY MADE AND MOMENTARILY BROKEN UPON RECEIPT OF THE STOP CHARACTER. (SEE BSP P34.101 FOR ORDERING INFORMATION.)
8. THE FOLLOWING EQUIPMENT IS REQUIRED:

28B TTY CABINET
28B ELECTRICAL SERVICE ASSEMBLY
28 TYPING UNIT
28C TTY BASE
28A MOTOR UNIT
128C3 TTY SUBSCRIBER SET
KS-5663, L7 RECTIFIER
120C4 TTY SUBSCRIBER SET
TP153324 CONTACT ASSEMBLY

FIG. 4
28B ELECTRICAL SERVICE UNIT EQUIPMENT ARRANGEMENT
(TOP VIEW)

LINE SHUNT RELAY PANEL (TERM. STRIPS "A" & "B" BOTTOM SIDE)	BLANK	BLANK	BLANK	BLANK	POWER PANEL (TERM. STRIPS "D" & "E" BOTTOM SIDE)

28 TYPE TELETYPEWRITER
IN 28B TTY CABINET
UNATTENDED TWX SERVICE
128C3 TTY SUBSCRIBER SET
120 VOLT AC POWER

COPYRIGHT, 1956, BY AMERICAN TELEPHONE AND TELEGRAPH CO.