SD-25958-01

SHEET INDEX

SHEET NO.	CONTENTS
1	SHEET INDEX SUPPORTING INFORMATION APPARATUS INDEX LEAD INDEX OPTION INDEX
2	CIRCUIT NOTES 101-104 INFORMATION NOTES
3	FS 1 SHORT TIME PRIMER FS 2 START SENDERS SHORT TIMING FS 3 HOLD OVER TIMING & END OF SHORT TIMING FS 4 ASSOCIATED CIRCUITS & LAMPS
4	APP FIGS. 1,2
5	CIRCUIT REQ TABLE TIMING REQ CAD 1,2

LEAD INDEX

DESIG	FS LOC
MISC CKTS SENDER MAKE BUSY FR	
BSG	3E7
STO	3F7
SENDER LINK & CONTROLLER CIRCUIT	
GB	3B2
SENDER CIRCUIT	
IST-	3F5
TRAFFIC REGISTER CIRCUIT	
IST	3H7
INTERRUPTER FRAME CIRCUIT	
GP	3H6
TRAFFIC SUPERVISORY CIRCUIT	
BSG	3F7
STO	3G7

OPTION INDEX

APP OR WIRING	LOCATION
2	3B6, 3F1, 3F6, 3G7
Z	3C6
Y	3C7

SUPPORTING INFORMATION

CATEGORY	NO.
EQUIPMENT DRAWINGS	J21850C-( )
EQUIPMENT DESIGN REQ	J21850

DWG ISSUE	CD ISSUE	DATE ISSUED	DRAWN	APP'D
1	1	12-10-56	G.L.Q. G.W.	WFH BWK
2D	2D	4-17-57	EH FGS	W.H. G.W.K.
3D	2D APP ID	1-19-62	RRH JJTS	WFH RBC TEB

APPARATUS INDEX

DESIG	LOCATION FS	LOCATION APP FIG	LOCATION EQPT
RELAYS			
EST	3C9	1	
HT	3B7	1	
STA	3F1	1	
STB	3G1	2	
STP	3B0	1	

DESIG	LOCATION FS	LOCATION APP FIG	LOCATION EQPT
CAPACITORS			
HT1	3C6	1	
HT2	3C6	1	
HT3	3C7	1	
HT4	3D6	1	
ELECTRON TUBES			
EST	3C5	1	
RESISTORS			
HT1	3C4	1	
HT2	3C5	1	
HT3	3B7	1	

SD- 25958-01

CROSSBAR SYSTEMS
TANDEM OFFICE
INTERSENDER TIMING CONTROL
CIRCUIT

(IST)

BELL TELEPHONE LABORATORIES INCORPORATED

DWG SIZE 2S

AT&TCO STANDARD 3

RR-102-1
SD-25958-01-1
5 SHEETS

PRINTED IN U.S.A.

SD-25958-01-1

CIRCUIT NOTES:

101.

DESIG	AMP	POTENTIAL FUSED	ONE PER
	1-1/3	-48V SIG	APP FIG. 1 OR 1 & 2
	0.5	+130V SIG	APP FIG. 1
A		GRD	APP FIG. 1
B		GRD	APP FIG. 2

BATTERY SYMBOL	VOLTAGE RANGE
-48	45-50V
+130	125-135V

102.

FEATURE OR OPTION		PROVIDE FIG.	PROVIDE APP OR WIR	PROVIDE QUANTITY
INTERSENDER TIMING CONTROL		1		ONE PER TYPE OF SENDERS
WHEN 21 TO 40 SUB GROUPS OF THE SAME TYPE OF SENDERS ARE FURNISHED		2		
HOLD OVER TIMING	10 SEC	1		
	20 SEC	1	Z	
	30 SEC	1	Y,Z	

FILE LETTER
3B4,6B
10-16-71
STRAPPED
11-13-69
RK

XBT 11-13-69 RK

103.

NETWORK VALUES		
NETWORK NO.	RESISTANCE IN OHMS	CAPACITANCE IN UF
1	470	0.11

104.

RECORD OF APP FIGURES, WIRING AND APPARATUS CHANGES							
CHANGED ON ISS	IF JOB RECORDS DO NOT SPECIFY	THIS OPTION WAS FURN	SEE NOTE	USE IN CIRCUIT STD	A & M	MD	

INFORMATION NOTES:

301.

DESIG	FS	MAKE AND BREAK INTERVALS					
OTR	4	B F	0.15 SEC	0.98 SEC	0.15 SEC	0.02 SEC	0.15 SEC
			ONE CYCLE				

DRAWING ISSUE
1
2D
3D

CROSSBAR SYSTEMS
TANDEM OFFICE
INTERSENDER TIMING CONTROL
CIRCUIT

BELL TELEPHONE LABORATORIES INCORPORATED

DWG SIZE 2S

SD-25958-01-2

3

SD-25958-01-2

FS 1
SHORT TIME PRIMER

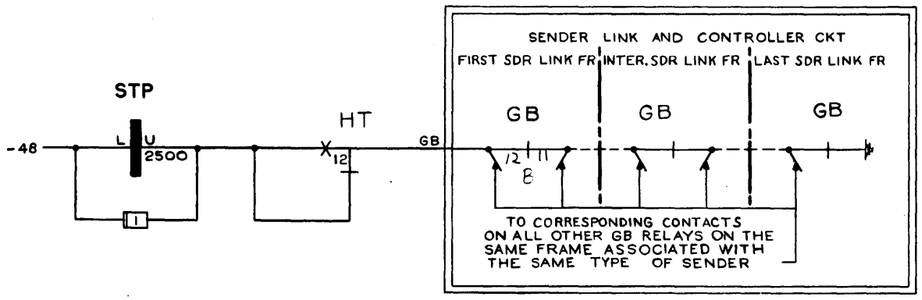

FS 2
START SENDERS SHORT TIMING

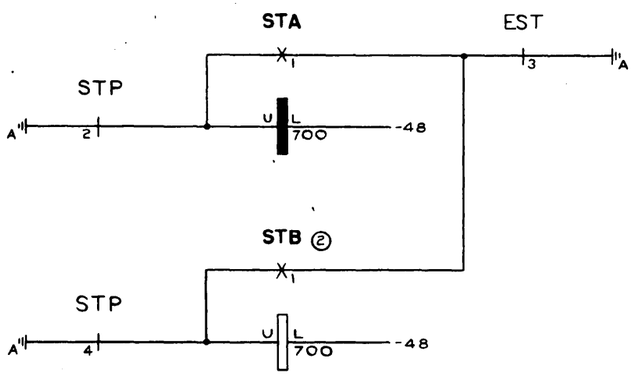

FS 3
HOLD OVER TIMING & END OF SHORT TIMING

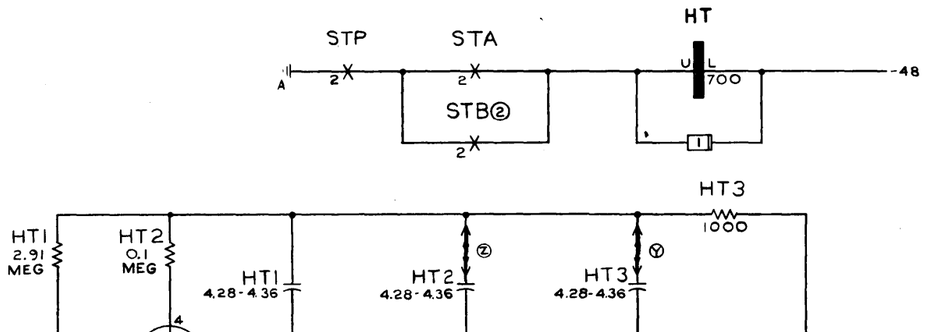

FS 4
ASSOCIATED CIRCUIT & LAMPS

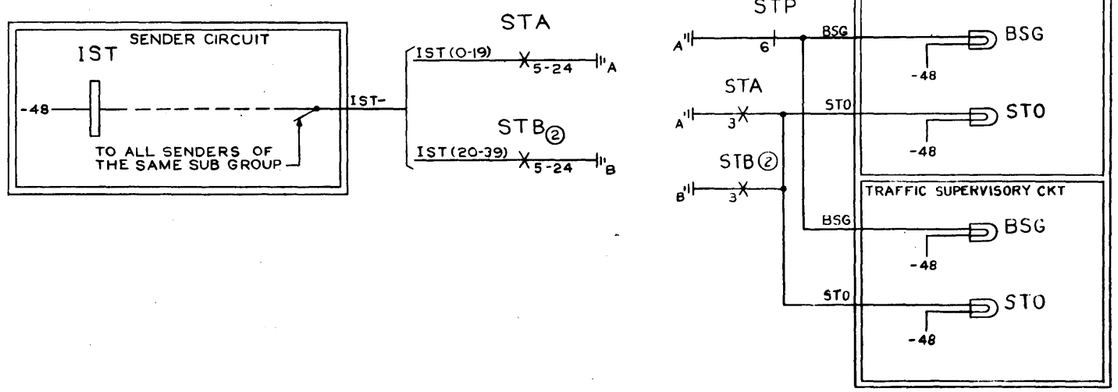

DRAWING ISSUE

1	
2D	
3D	

CROSSBAR SYSTEMS
TANDEM OFFICE
INTERSENDER TIMING CONTROL CIRCUIT

BELL TELEPHONE LABORATORIES INCORPORATED

25

SD-25958-01-3

SD-25958-01-3

APP FIG 1

RELAY

DESIG	EST				HT				STP												DESIG
CODE	AF64				AF32				AF30												CODE
OPTION																					OPTION
	CONT ARR	LOC	CONT ARR	LOC	CONT ARR	LOC	CONT ARR	LOC	CONT ARR	LOC	CONT ARR	LOC	CONT ARR	LOC	CONT ARR	LOC	CONT ARR	LOC	CONT ARR	LOC	
12	EMB				EMB	3C1			EBM												12
11	M																				11
10	M				EBM				EBM												10
9	BM																				9
8	M				EBM				EBM												8
7	BM																				7
6	EMB				EMB	3C8			EBM	3E7											6
5	BM																				5
4	M				EBM				EBM	3G0											4
3	BM	3E2																			3
2	M				EBM				EBM	a											2
1	M																				1
COIL		3C9				3B7				3B0											COIL
										a 3F0 3B6											

RELAY

DESIG	STA																				DESIG
CODE	AJ202																				CODE
OPTION																					OPTION
	CONT ARR	LOC	CONT ARR	LOC	CONT ARR	LOC	CONT ARR	LOC	CONT ARR	LOC	CONT ARR	LOC	CONT ARR	LOC	CONT ARR	LOC	CONT ARR	LOC	CONT ARR	LOC	
24	M	3E6																			24
23	M	3E6																			23
22	M	3E6																			22
21	M	3E6																			21
20	M	3E6																			20
19	M	3E6																			19
18	M	3E6																			18
17	M	3E6																			17
16	M	3E6																			16
15	M	3E6																			15
14	M	3E6																			14
13	M	3E6																			13
12	M	3E6																			12
11	M	3E6																			11
10	M	3E6																			10
9	M	3E6																			9
8	M	3E5																			8
7	M	3E6																			7
6	M	3E6																			6
5	M	3E6																			5
4	M	3H6																			4
3	M	3F7																			3
2	M	3B6																			2
1	M	3E1																			1
COIL		3F1																			COIL

CAPACITORS

DESIG	LOC	CODE
HT1	3C6	437QA
HT2	3C6	437QA
HT3	3C7	437QA
4T4	3D6	KS-13368,L1

ELECTRON TUBES

DESIG	LOC	CODE
EST	3C5	313CC

NETWORKS

DESIG	LOC	CODE
EST	3D9	185A
HT	3B7	185A
STP	3C0	185A

RESISTORS

DESIG	LOC	CODE
HT1	3C4	145A
HT2	3C5	145A
HT3	3B7	145C

APP FIG 2

RELAY

DESIG	STB																				DESIG
CODE	AJ202																				CODE
OPTION																					OPTION
	CONT ARR	LOC	CONT ARR	LOC	CONT ARR	LOC	CONT ARR	LOC	CONT ARR	LOC	CONT ARR	LOC	CONT ARR	LOC	CONT ARR	LOC	CONT ARR	LOC	CONT ARR	LOC	
24	M	3F6																			24
23	M	3F6																			23
22	M	3F6																			22
21	M	3F6																			21
20	M	3F6																			20
19	M	3F6																			19
18	M	3F6																			18
17	M	3F6																			17
16	M	3F6																			16
15	M	3F6																			15
14	M	3F6																			14
13	M	3F6																			13
12	M	3F6																			12
11	M	3F6																			11
10	M	3F6																			10
9	M	3F6																			9
8	M	3F6																			8
7	M	3F6																			7
6	M	3F6																			6
5	M	3F6																			5
4	M																				4
3	M	3F7																			3
2	M	3B6																			2
1	M	3F1																			1
COIL		3G1																			COIL

DRAWING ISSUE

1	
2D	
3D	

CIRCUIT REQUIREMENTS

APPARATUS DESIG	CODE	OPTION	FIG.	MECH REQT BSP FIG.	CONT PRESS.	ARM. TRVL	CIRCUIT PREPARATION BLOCK OR INSULATE	TEST CLIP DATA CONN BAT.	CONN GRD	TEST SET PREP	SEE TEST NOTE	DIRECT CURRENT FLOW REQT TEST WDG	TEST FOR	AFTER SOAK MA.	TEST MA.	READJ MA.	REMARKS
RELAYS																	
EST	AF64		1	219			(HT)NO	U(EST)		BAT			0		11.2	10.6	
[illegible]	AF32		1	208			(STP)NO		U(HT)	GRD			0		32.5	30.5	
STA	AJ202		1	500			(STP)O (EST)O		U(STA)	GRD			0		43	40.5	
STB	AJ202		2	500			(STP)O (EST)O		U(STB)	GRD			0		43	40.5	
STP	AF30		1	217			12(HT) (STA)NO (STB)NO		U(STP)	GRD			0		8.7	8.2	
ELECTRON TUBES																	
TIMING REQ																	
EST	313CC		1								1						

TEST NOTES:
1. TO MEASURE (EST) TIMER, MANUALLY OPERATE (HT) RELAY AND CHECK THAT (EST) RELAY OPERATES IN 8 TO 13 SECONDS, OR 16 TO 26 SECONDS WITH "Z" OPTION, OR 24 TO 39 SECONDS WITH "Y" AND "Z" OPTIONS.

DRAWING ISSUE: 1 / 2D / 3D

PAGES) PAGE

TANDEM OFFICE
INTERSENDER TIMING CONTROL
CIRCUIT

BELL TELEPHONE LABORATORIES, INC

SD-25958-01-5 3

PRINTED IN U.S.A.

SD-25958-01-5

CAD 1

FOR APP FIG. 1 & PART OF APP FIG. 2

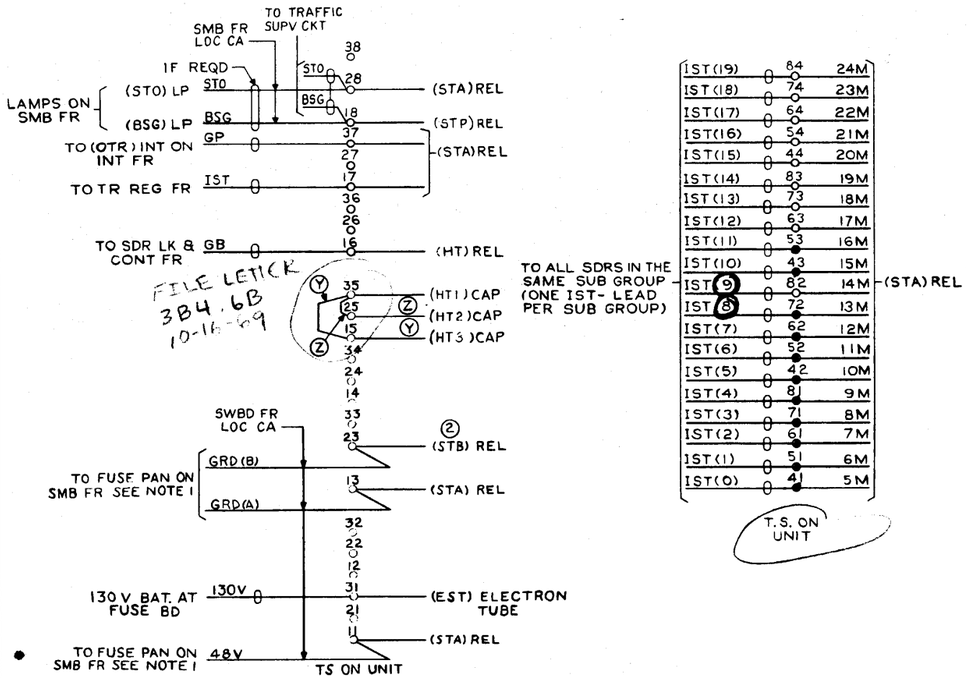

CAD 2

(FOR PART OF APP FIG 2)

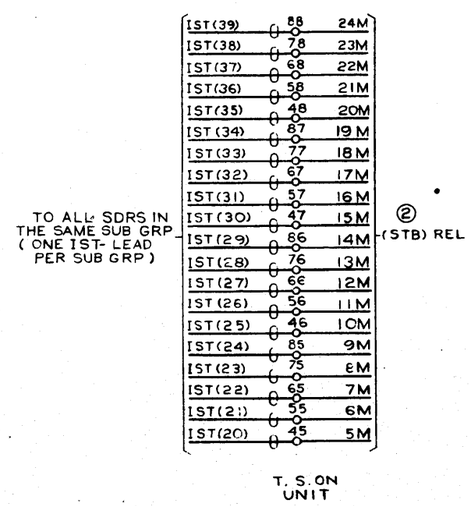

SHEET NOTES:
1. IF THE INTERSENDER TIMING CONTROL UNIT IS NOT LOCATED ON THE SDR MAKE BUSY FR THE 48V & GRD LEADS SHOULD BE RUN TO THE MISC FUSE BAY.

DRAWING ISSUE: 1 / 2D / 3D

CROSSBAR SYSTEMS
TANDEM OFFICE
INTERSENDER TIMING CONTROL
CIRCUIT

BELL TELEPHONE LABORATORIES, INC

SD-25958-01-5 3

PRINTED IN U.S.A.