CONTENTS	SHEET NO.	SHEET ISSUE NO.
SHEET INDEX LEAD INDEX OPTION INDEX	A1	15
APPARATUS INDEX	A2	14
MNEMONIC INDEX	A3	14
FS 1 POWER CIRCUIT	B1	11
FS 2 DCTU CONTROLLER CIRCUIT	B2A	6
	B2B	6
FS 3 PICB INTERFACE CIRCUIT	B3A*	
	B3B*	
	B3C	15
	B3D	15
FS 4 EQUIPMENT ACCESS NETWORK CIRCUITS	B4	13
FS 5 PMU CONTROLLER, INTERFACE, AND MEMORY CIRCUIT	B5A	13
	B5B	13
	B5C	15
	B5D	15
FS 6 PROGRAMMABLE SIGNAL GENERATOR CIRCUIT	B6	13
FS 7 LINE REFERENCE MODULE CIRCUIT	B7	13
FS 8 MEASUREMENT CONTROLLER 1 AND 2 CIRCUIT	B8A	13
	B8B	13
FS 9 DATA CONVERTER CIRCUIT	B9	13
FS 10 SIGNAL CONDITIONER CIRCUIT	B10	13
FS 11 FILTER CIRCUIT	B11	13
FS 12 CURRENT SENSOR CIRCUIT	B12	13
FS 13 TIP AND RING TERMINATION CIRCUIT	B13A	13
	B13B	13
	B13C	13
FS 14 SOURCE AMPLIFIER CIRCUIT	B14	13
FS 15 CORE ACCESS NETWORK CIRCUIT	B15	13
FS 16 PORT UNIT CIRCUIT	B16A	14
	B16B	14
FS 17 CPS982LM DCTU BACKPLANE RESISTOR CIRCUIT MODULE	B17	14
APP FIG. 1,2,3,4,5,6,7,8,9	C1	15

* SHEET B*3A, B*3B CANCELLED ON ISSUE 6A

CONTENTS	SHEET NO.	SHEET ISSUE NO.
CIRCUIT NOTES EQUIPMENT NOTES	D1	15
EQUIPMENT NOTES (CONT)	D2	5
INFORMATION NOTES	D3	15
CAD 1	G1	11
CAD 2,3	G2	2
CAD 4,5	G3	1
CAD 6,7	G4	1
CAD 8,9,10,11	G5	14
CAD 12,13,14	G6	13
CAD 15,16,17	G7	13
CAD 18	G8	2
CAD 19	G9	13
CAD 20	G10	13
CAD 21	G11	13
CAD 22,23,24,25	G12	14
CAD 26,27	G13	14

LEAD INDEX

DESIG	LOCATION FS	LOCATION CAD
5 ESS		
CN0 CN1 CP0 CP1	C/C1	5B1 5D1 5B1 5D1
IDN0 IDN1 IDP0 IDP1	C/C7	5B1 5D1 5B1 5D1
RMR00 RMR01 RMR02 RMR03		5B4
RMR10 RMR11 RMR12 RMR13		5D4
RMR20 RMR21 RMR22 RMR23		5F4
RMT00 RMT01 RMT02 RMT03	16A/C1, 16B/C0	5B4
RMT10 RMT11 RMT12 RMT13		5D4
RMT20 RMT21 RMT22 RMT23		5F4
NINTN0 NINTN1 NINTP0 NINTP1	3C/C7	5B1 5D1 5B1 5B1
ODN0 ODN1 ODP0 ODP1		5D1 5B1 5D1
SN0 SN1 SP0 SP1	3C/C1	5B1 5D1 5D1 5D1

OPTION INDEX

APP OR ARG	RATED ON ISSUE	REF NOTES	LOCATION
Z			1C9, CAD 1,9,10,11, 13,14,16,18,20,21, 23,24,26,27
Y			NOT TO BE REASSIGNED
X			NOT TO BE REASSIGNED
R	5B MD	305	13B/A2,13B/A5, 13B/F2,APP FIG.5,6
Q	5B STD	305	13C/A2,13C/A5, 13C/F2,APP FIG.5,6
N	8B MD	306	SHEET 1,APP FIG.1,8
M	8B STD	306	SHEET 1,APP FIG.1,8
K	13AC (A & MI)	312	APP FIG. 1,5,6
J	13AC STD	312	APP FIG 4,5,6

DWG ISSUE	CD ISSUE	DATE ISSUED		APPD
1	1	10-13-82	JGT	RWF OBD RNH
2A	2A	8-18-82	FJB	RWF SAH RNH
3A	3A	7-22-83	CDI JGT	RWF SAH EJK
4B	3A APP 1B	7-22-83	CDI JGT	RWF SAH EJK
5B	3A APP 2B	7-22-83	ADC JGT	RWF SAH DJC
6A	3A APP 3A	2-5-87	ADC	
7B	3A APP 4B	2-5-87	ADC	
8B	3A APP 5B	2-5-87	ADC	
9A	3A APP 6A	2-5-87	ADC	
10AC	3A APP 7AC	2-5-87	ADC	
11B	3A APP 8B	2-5-87	CDI	
12A	3A APP 9A	2-5-87	CDI	
13AC	3A APP 10C	2-5-87	CDI	
14A	3A APP 11A	3-1-88	ADC RSS	BT WSD LAM
15A	3A APP 12A	3-1-88	ADC RSS	BT WSD LAM

SUPPORTING INFORMATION

CATEGORY	NO.
EQUIPMENT DESIGN REQUIREMENTS	[illegible] (823-102-112)

SHEET INDEX NOTES

1. WHEN CHANGES ARE MADE IN THIS DRAWING ONLY THOSE SHEETS AFFECTED WILL BE REISSUED.
2. THIS SHEET INDEX WILL BE REISSUED AND BROUGHT UP TO DATE EACH TIME ANY SHEET OF THE DRAWING IS REISSUED, OR A NEW SHEET IS ADDED.
3. THE ISSUE NUMBER ASSIGNED TO A CHANGED OR NEW SHEET WILL BE THE SAME ISSUE NUMBER AS THAT OF THE SHEET INDEX.
4. SHEETS THAT ARE NOT CHANGED WILL RETAIN THEIR EXISTING ISSUE NUMBER.
5. THE LAST ISSUE NUMBER OF THE SHEET INDEX IS RECOGNIZED AS THE LATEST ISSUE NUMBER OF THE DRAWING.

COPYRIGHT © 1988 AT&T
ALL RIGHTS RESERVED

AL90

OPERATIONS SUPPORT SYSTEMS COMMON

DIRECTLY CONNECTED TEST UNIT CIRCUIT

DWG SIZE 6S | ISSUE 15A

AT&T BELL LABORATORIES | SD -2P077-01 | SHEET A1 OF 46

E-7410 10-761 PRINTED IN U.S.A.

APPARATUS INDEX

EQPT LOC	LOCATION FS	APP FIG.
PACKS, CIRCUIT LIST 1		
004-010	2A/A4, 2B/A3	4
004-018	5A/A3, 5B/A7	5
004-018	5C/A2	5
004-018	3C/B5, 3D/A5	4
004-026	5B/A2 5D/A2	5
004-030	8A/A2	5
004-034	8B/A2	5
004-042	12B2	5
004-050	11B2	5
004-058	10A2	5
004-070	10A2	5
004-078	9A3	5
004-086	6A2	5
004-094	7A3	5
004-102	7A3	5
004-110	13A/B2	5
004-118	13B/A2 13C/A2	5
004-130	14A2	5
004-138	14A2	5
004-146	15A2	5
004-154	4A4	4
004-154	16A/A4	5
004-162	16A/A4	5
004-170	16A/A4	5
004-178	16A/A4	5

EQPT LOC	LOCATION FS	APP FIG.
PACKS, CIRCUIT LIST 3		
004-010	5A/A7, 5B/A7	6
004-018	5C/A5	6
004-026	5D/A7	6
004-030	8A/A5	6
004-034	8B/A5	6
004-042	12B6	6
004-050	11B5	6
004-058	10C7	6
004-070	10C7	6
004-078	9A7	6
004-086	6A7	6
004-094	7A7	6
004-102	7A7	6
004-110	13A/A5	6
004-118	13B/A5, 13C/A5	6
004-130	14A6	6
004-138	14A6	6
004-146	15A7	6
004-154	16B/A2	6
004-162	16B/A2	6
004-170		
004-170		
004-178	16B/A2	6

DESIG	LOCATION FS	APP FIG.	EQPT
PACKS, CIRCUIT LIST 1			
CAN1	15A2	5	004-146
DCONV1	9A3	5	004-078
DCTUCTL	2A/A4, 2B/A3	4	004-010
FLTR1	11B2	5	004-050
ISENS1	12B2	5	004-042
LRM1	7A3	5	004-094
LRM1	7A3	5	004-102
MCTL1-1	8A/A2	5	004-030
MCTL2-1	8B/A2	5	004-034
PICB INTER	3C/B5, 3D/A5	4	004-018
PMUCTL1	5A/A3, 5B/A2	5	004-010
PMUINT1	5C/A2	5	004-018
PMUMEM1	5D/A2	5	004-026
PORT1	16A/A4	5	004-154
PORT1	16A/A4	5	004-162
PORT1	16A/A4	5	004-170
PORT1	16A/A4	5	004-178
PSG1	6A2	5	004-086
RTERM1	13B/A2, 13C/A2	5	004-118
SIG CON1	10A2	5	004-058
SIG CON1	10A2	5	004-070
SOAMP1	14A2	5	004-130
SOAMP1	14A2	5	004-138
SWU1	4A4	4	004-154
TTERM1	13A/B2	5	004-110

DESIG	LOCATION FS	APP FIG.	EQPT
PACKS, CIRCUIT LIST 3			
CAN( )	15A7	6	004-146
DCONV( )	9A7	6	004-078
FLTR( )	11B5	6	004-050
ISENS( )	12B6	6	004-042
LRM( )	7A7	6	004-094
LRM( )	7A7	6	004-102
MCTL1-1	8A/A5	6	004-030
MCTL2-1	8B/A5	6	004-034
PMUCTL1( )	5A/A7, 5B/A7	6	004-010
PMUINT( )	5C/A5	6	004-018
PMUMEM( )	5D/A7	6	004-026
PORT( )	16B/A2	6	004-154
PORT( )	16B/A2	6	004-162
PORT( )	16B/A2	6	004-170
PORT( )	16B/A2	6	004-178
PSG( )	6A7	6	004-086
RTERM( )	13B/A5, 13C/A5	6	004-118
SIG CON( )	10C7	6	004-058
SIG CON( )	10C7	6	004-070
SOAMP( )	14A6	6	004-130
SOAMP( )	14A6	6	004-138
SWU2	4A4	9	004-170
TTERM( )	13A/A5	6	004-110

DESIG	LOCATION FS	APP FIG.	EQPT
982LM CIRCUIT MODULE LIST 1,2,3			
982LM	17A4	3	004-178

PACKS, CIRCUIT LIST 2		
004-010	5A/A7, 5B/A7	6
004-018	5C/A5	6
004-026	5D/A7	6
004-030	8A/A5	6
004-034	8B/A5	6
004-042	12B6	6
004-050	11B5	6
004-058	10C7	6
004-070	10C7	6
004-078	9A7	6
004-086	6A7	6
004-094	7A7	6
004-102	7A7	6
004-110	13A/A5	6
004-118	13B/A5 13C/A5	6
004-130	14A6	6
004-138	14A6	6
004-146	15A7	6
004-154	16B/A2	6
004-162	4A4	7
004-162	16B/A2	6
004-170	16B/A2	6
004-178	16B/A2	6

RESISTOR LIST 1		
004-042	12G0	1

RESISTOR LIST 2			
004-042	12G0	6	

RESISTOR LIST 3			
004-042	12G0	6	

UNITS, POWER LIST 1			
004-042	1A2	1	
004-050	1D2	1	
004-058	1A8	1	
004-074	1C8	1	
004-090	1E8	1	

UNITS, POWER LIST 2			
004-114	1E2	8	

PACKS, CIRCUIT LIST 2			
CAN( )	15A7	6	004-146
DCONV( )	9A7	6	004-078
FLTR( )	11B5	6	004-050
ISENS( )	12B6	6	004-042
LRM( )	7A7	6	004-094
LRM( )	7A7	6	004-102
MCTL1-1	8A/A5	6	004-030
MCTL2-1	8B/A5	6	004-034
PMUCTL( )	5A/A7, 5B/A7	6	004-010
PMUINT( )	5C/A5	6	004-018
PMUMEM( )	5D/A7	6	004-026
PORT( )	16B/A2	6	004-154
PORT( )	16B/A2	6	004-162
PORT( )	16B/A2	6	004-170
PORT( )	16B/A2	6	004-178
PSG( )	6A7	6	004-086
RTERM( )	13B/A5, 13C/A5	6	004-118
SIG CON( )	10C7	6	004-058
SIG CON( )	10C7	6	004-070
SOAMP( )	14A6	6	004-130
SOAMP( )	14A6	6	004-138
SWU2	4A4	7	004-162
TTERM( )	13A/A5	6	004-110

RESISTOR LIST 1			
R1	12G0	1	004-042

RESISTOR LIST 2			
R( )	12G0	6	004-042

RESISTOR LIST 3			
R( )		6	004-042

UNITS, POWER LIST 1			
+5.1A	1A2	1	004-042
+12	1D2	1	004-050
-12	1A8	1	004-058
+15Q, -7Q	1C8	1	004-074
-15Q	1E8	1	004-090

UNITS, POWER LIST 2			
+5.1B	1E2	8	004-114

COPYRIGHT © 1988 AT&T
ALL RIGHTS RESERVED

DIRECTLY CONNECTED TEST UNIT CIRCUIT

DWG SIZE 6S | ISSUE 14A

AT&T BELL LABORATORIES | SD -2P077-01 | SHEET A2

DESIGNATION MNEMONIC INDEX

MNEMONIC	FS NO.	DESCRIPTION
1MHZ	8	DSP OUTPUT CLOCK SIGNAL
3MHZ_CLK	2	BUFFERED 3 MHZ CLOCK SIGNAL
4MHZ_CLK	5	PMU 4MHZ CLOCK
5_I_SENSE A	1	5 VOLT CURRENT SENSING FROM +5.1A POWER UNIT
5_I_SENSE B	1	5 VOLT CURRENT SENSING FROM +5.1B POWER UNIT
5_SAT	11	75MA SATURATION DETECTION CONTROL SIGNAL FOR SM258B
+/-9VREF	6	+/- DC REFERENCE VOLTAGE LEVEL FOR SM254
+/-15V	15	REFERENCE VOLTAGE FOR SM257
+/- SENSE	1	+5.1B REMOTE VOLTAGE SENSING FOR PMU2 AND PMU3
(A-B)_COS	7	SM254 COSINE CHANNEL SINUSOIDAL OUTPUTS
(A-B)_SIN	7	SM254 SINE CHANNEL SINUSOIDAL OUTPUTS
(A-B)_R	14	CROSS CONNECT BETWEEN TIP/RING SM263'S
(A-B)_T	14	CROSS CONNECT BETWEEN TIP/RING SM263'S
AC_CLR(1-2)	8	TIP/RING AC SATURATION DETECTOR RESET FOR SM258B
AC_PA(1-2)	8	TIP/RING AC PRE-AMP CONTROL FOR SM258B
AC_SAT_(1-2)	10	TIP/RING INTERRUPT FOR VOLTAGE OVERLOAD IN AC SECTION
ALMO(0-7)	3	POWER SUPPLY ALARM SIGNALS
AM_(1-3)	5	PMU MEMORY RAM TIEPOINTS
ARST	5	PMU INTERFACE ACQUISITION RESET
ATN8	2	BUFFERED GPIB ATTENTION SIGNAL
A/D_CLK	9	A/D CONVERTER CLOCK OUTPUT
A/D_DATA	9	A/D CONVERTER SERIAL DATA SYNCHRONOUS WITH A/D CLOCK
A/D_START	8	A/D CONVERTER START PULSE FOR SM257
CLK_PA	6	TIP AND RING DATA LATCH PULSE FOR SM254
CLK_PC	6	TIP AND RING CONTROL LATCH PULSE FOR SM254
CLR_RD	8	CLEAR TO READ FOR DSP
CN(0-1)	3	PICB CLOCK, NEGATIVE CHANNELS
CORE PULSE	12	50 KHZ TRANSFORMER CORE SATURATION TEST POINT PULSE
COSO	6	COSINE CHANNEL SINUSOIDAL OUTPUT
CP(0-1)	3	PICB CLOCK, POSITIVE CHANNELS
CS_(0-1)	6	TIP/RING DC CHANNEL SELECT FOR SM254
CST0	8	RING D/A CHIP SELECT FOR SM260
CS11	8	OCTAL LATCH CLOCK STROBE FOR SM259B
CS12	8	OCTAL LATCH CLOCK STROBE FOR SM264
CS1(3-4)	8	OCTAL LATCH CLOCK STROBE FOR SM257
CST5	8	D/A CONVERTER CHIP SELECT FOR SM257
CS1A	8	OCTAL LATCH CLOCK STROBE FOR SM264
CSOE	8	OCTAL LATCH CLOCK STROBE FOR SM260
CSOF	8	TIP D/A CHIP SELECT FOR SM260
DAC_REF	10	7.68V D/A REFERENCE VOLTAGE FOR SM260
DAV8	2	BUFFERED GPIB DATA VALID
DC_CLR(1-2)	8	TIP/RING DC SATURATION DETECTOR RESET FOR SM258B
DC_PA(1-2)	8	TIP/RING DC PRE-AMP CONTROL FOR SM258B
DC_SAT_(1-2)	10	TIP/RING INTERRUPT FOR VOLTAGE OVERLOAD IN DC SECTION
DC_(0-1)	7	POSITIVE/NEGATIVE DC LEVELS
DIO(1-8)	2	GPIB DATA BUS
DSP_RDY	8	INTERRUPT INDICATES DSP NOT READY FOR DATA
D_AB(00-15)	2	BUFFERED DCTU CONTROLLER ADDRESS BUS
D_CLK_OUT_8	2	BUFFERED BELLMAC-8 CLOCKOUT LEAD
D_DB(00-07)	2	BUFFERED BIDIRECTIONAL TRI-STATE DATA BUS SIGNALS
D_IACK8	2	BUFFERED BELLMAC-8 INTERRUPT ACKNOWLEDGE
D_IMRST	2	INPUT MASTER RESET SIGNAL
D_IOE8	2	BUFFERED I/O DECODE ENABLE
D_IREQ(00-07)	2	INTERRUPT REQUESTS
D_NMIR	2	NON-MASKABLE INTERRUPT REQUEST
D_OMRST	2	OUTPUT MASTER RESET SIGNAL
D_RD8	2	BUFFERED DCTU CONTROLLER BELLMAC-8 READ SIGNAL
D_RDP8	2	BUFFERED PERIPHERAL READ
D_RDY	2	8CLLMAC-8 DATA READY
D_SAN	2	CPU SANITY SIGNAL FOR TN629B
D_SWAIT	2	SINGLE WAIT STATE SELECT LEAD
D_TP1	2	DCTU CONTROLLER TEREDYNE CIRCUIT PACK TEST POINT
D_WAIT	5	MULTIPLE WAIT STATE SELECT LEAD
D_WR8	2	BUFFERED DCTU CONTROLLER BELLMAC-8 WRITE SIGNAL
D_WRP8	2	BUFFERED PERIPHERAL WRITE
D_U_CLK8	2	BUFFERED 8253 TIMER-1 OUTPUT
EAN(0-3)0	3	BUFFERED SWITCHING-UNIT WRITE ENABLE PULSE
EOI8	2	BUFFERED GPIB END OR IDENTITY

DESIGNATION MNEMONIC INDEX (CONT):

MNEMONIC	FS NO.	DESCRIPTION
FS(1-2)_(A-B)	5	PMU MEMORY BANK FEEDBACK
GPIB_DREQ	2	GPIB DMA REQUEST
GPIB_DACK8	2	GPIB DMA ACKNOWLEDGE
GPIB(0-2)	5	GPIB ADDRESS STRAPS FOR PMU# IDENTIFICATION
HAZ_SLV( )	16	PORT HAZARDOUS SLEEVE
HP(0-3)(0-3)	16	PORT HAZARDOUS POTENTIAL SIGNAL
IBF	5	PMU INTERFACE DSP INPUT BUFFER FULL SIGNAL
IDN(0-1)	3	PICB INPUT DATA, NEGATIVE CHANNELS
IDP(0-1)	3	PICB INPUT DATA, POSITIVE CHANNELS
IFC8	2	BUFFERED GPIB INTERFACE CLEAR
NRF08	2	BUFFERED GPIB NOT READY FOR DATA SIGNAL
NDAC8	2	BUFFERED GPIB NOT DATA ACCEPT
K(00-11)	6	TIP AND RING RELAY SELECTS FOR SM254
K9_TR	13	CROSS CONNECT BETWEEN SM261 AND SM262B
K10_T	13	CROSS CONNECT BETWEEN SM261 AND SM262B
K10_R	13	CROSS CONNECT BETWEEN SM261 AND SM262B
K11_R	13	CROSS CONNECT BETWEEN SM261 AND SM262B
K12_T	13	CROSS CONNECT BETWEEN SM261 AND SM262B
LDAC	6	TIP AND RING SM254'S LOAD D/A CONVERTER PULSE
LTT0	2	LONG TERM TONE SIGNAL MODULATED AT 1 HZ
LTT1	2	LONG TERM TONE SIGNAL MODULATED AT 5 HZ
MS(0-7)	8	TIMING SYNCHRONIZATION SIGNALS
M(1-2)_S(1-2)	9	TIP/RING MULTIPLEXER SELECTS FOR SM258B
NINTP(0-1)	3	PICB INTERRUPT, POSITIVE CHANNELS
NINTN(0-1)	3	PICB INTERRUPT, NEGATIVE CHANNELS
NMI(1-2)	6	TIP/RING SM254'S NON-MASKABLE INTERRUPT PULSE
M1/M2	8	CONTROL FOR 2-1 ANALOG MUX ON SM257
ODP(0-1)	3	PICB OUTPUT DATA, POSITIVE CHANNELS
ODN(0-1)	3	PICB OUTPUT DATA, NEGATIVE CHANNELS
OE/VPP	5	EPROM/ROM OUTPUT ENABLE AND PROGRAMMING LEAD
OM_(1-3)	5	PMU MEMORY ROM TIEPOINTS
OVRD	8	PROGRAMMABLE GAIN AMPLIFIER GAIN OVERRIDE FOR SM257
ORST	5	PMU INTERFACE CP OUTPUT RESET
PC2_(0-1)	7	TIP/RING LINE REFERENCE MODULE STATUS FLAG
PC3_(0-1)	7	TIP/RING LINE REFERENCE MODULE DATA ACCEPT FLAG
PGA(1,2,4,8)	8	PROGRAMMABLE GAIN AMPLIFIER GAIN LEVEL SELECTS
PGM	3	2712B EPROM PROGRAMMING ENABLE
PROMUS/NORM	5	PMU PROMUS MODE SELECT INPUT
PR_GRD	5	PMU MEMORY EPROM PROGRAMMING GROUND
PSUEDO_SAT	8	INTERRUPT CONDITION INDICATES PSUEDO-GAIN OVERLOAD
PSUEDO	8	INDICATES PSUEDO GAIN APPLIED TO MEASUREMENT
PTE(0-3)(0-3)	16	PORT ENABLES
RENB	2	BUFFERED GPIB REMOTE ENABLE
RMT(0-2)(0-3)	16	TIP SIDE OF TRUNK CONNECTION
RMR(0-2)(0-3)	16	RING SIDE OF TRUNK CONNECTION
RN_SAN	5	PMU CPU SANITY FOR SM256
RING1	14	RING SIDE AMPLIFIER FOR SM262B
RL	15	CURRENT TO LOOP THROUGH RING TRANSFORMER ON SM260
RN_SAN	5	PMU CPU SANITY FOR SM256
RO/AN_(A-C)	5	PMU MEMORY DEVICE TYPE JUMPER
RO/AN_D(1-2)	5	PMU MEMORY DEVICE TYPE JUMPER
R_AB(00-15)	5	PMU BUFFERED TRI-STATE ADDRESS BUS
R_AUX_CLK	5	PMU 8253 TIMER0 SIGNAL
R_CLK_OUT_8	5	PMU CONTROLLER OUTPUT CLOCK
R_DB0(0-7)	5	PMU BUFFERED BELLMAC-8 DATA BUS
R_DMA_ACK8	5	PMU DMA ACKNOWLEDGE
R_DMA_REQ	5	PMU CONTROLLER BELLMAC-8 DMA REQUEST
R_IACK8	5	PMU BELLMAC-8 INTERRUPT ACKNOWLEDGE
R_IOE8	5	PMU INTERFACE BUFFERED I/O ENABLE FOR ANALOG CPS
R_IREQ0(1-6)	5	PMU INTERRUPT REQUESTS
R_MB3_A	5	PMU MEMORY BANK SELECT
R_MB4_A	5	PMU MEMORY BANK SWITCHING
R_MB1-2)_(A-B)	5	PMU MEMORY BANK FEEDBACK
R_NMIR	5	PMU CONTROLLER BELLMAC-8 NON-MASKABLE INTERRUPT
R_OMRST	5	PMU CONTROLLER OUTPUT MASTER RESET
R_RD8	5	PMU BELLMAC-8 BUFFERED READ SIGNAL
R_RDP8	5	PMU BUFFERED PERIPHERAL READ
R_RDY	5	PMU CONTROLLER BELLMAC-8 DATA READY SIGNAL
R_SA	13	CURRENT APPLIED TO RING TRANSFORMER ON SM260

DESIGNATION MNEMONIC INDEX (CONT):

MNEMONIC	FS NO.	DESCRIPTION
R_SWAIT	5	PMU CONTROLLER SINGLE WAIT STATE LEAD
R_U_CLK8	5	PMU BUFFERED 8253 TIMER1 SIGNAL
R_WAIT	5	PMU CONTROLLER MULTIPLE WAIT STATE LEAD
R_WR8	5	PMU BELLMAC-8 BUFFERED WRITE
R_WRP8	5	PMU BUFFERED PERIPHERAL WRITE
SAN	13	PMU SANITY BUS ONLY
SAN1_R	14	SANITY CROSS CONNECT TO SM261
SAN1_T	14	SANITY CROSS CONNECT BETWEEN TIP/RING SM263'S
SAN2_R	14	SANITY CROSS CONNECT BETWEEN TIP/RING SM263'S
SAN(1)	9	PMU SANITY BUS OR D/A CONVERTER OUTPUT VOLTAGE
SAN_SC(1-2)	9	TIP/RING SANITY BUS SELECTS
SER_DATA	8	SERIAL INPUT DATA TO DSP
SHFT_CLK	8	INPUT DATA SHIFT CLOCK FOR DSP
(SIN,COS)_M	10	MEDIUM BAND SIGNALS BETWEEN TIP/RING SM258BS
(SIN,COS)_N	10	NARROW BAND SIGNALS BETWEEN TIP/RING SM258BS
SLV_DIAG( )	16	SLEEVE DIAGNOSTIC CONNECTION
SN(0-1)	3	PICB SELECT, NEGATIVE CHANNELS
SRC_SCAN	6	SANITY BUS
SRQ8	2	BUFFERED GPIB SERVICE REQUEST
SP(0-1)	3	PICB SELECT, POSITIVE CHANNELS
SYNC	8	INPUT SYNC LEAD TO DSP ON SM251
S/H	8	SAMPLE/HOLD CONTROL FOR AMPLIFIERS ON SM257
S(0-5)_T(0-5)	15	TIP SIDE OF EAN CONNECTION TO PMU
S(0-5)_R(0-5)	15	RING SIDE OF EAN CONNECTION TO PMU
TMR	6	TIP AND RING SM254 TIMER INTERRUPT PULSE
TIP1	14	TIP SIDE AMPLIFIER FOR SM261
TL	15	CURRENT TO LOOP THROUGH TIP TRANSFORMER ON SM260
TRST	5	PMU INTERFACE CP TEST RESET
TR_AUX	15	CURRENT TO LOOP FOR RESISTIVE FAULT SECTIONALIZATION
T_SA	13	CURRENT APPLIED TO TIP TRANSFORMER ON SM260
VPP	3	EPROM PROGRAMMING VOLTAGE LEAD
V_COS_R	10	RING CHANNEL SIGNAL FOR SM257
V_F_TIP	11	FILTERED TIP VOLTAGE FOR SM258B
V_F_RING	11	FILTERED RING VOLTAGE FOR SM258B
V_RING	12	VOLTAGE PROPORTIONAL TO RING CURRENT FOR SM259B
V_SIN_T	10	TIP CHANNEL SIGNAL FOR SM257
V_TIP	12	VOLTAGE PROPORTIONAL TO TIP CURRENT FOR SM259B
XTL1	6	TIP AND RING SM254'S 4.194 MHZ MICROPROCESSOR CLOCK
Y(0-3)_T(0-11)	16	TIP SIDE OF EAN CONNECTION TO PORT
Y(0-3)_R(0-11)	16	RING SIDE OF EAN CONNECTION TO PORT

COPYRIGHT © 1988 AT&T
ALL RIGHTS RESERVED

DIRECTLY CONNECTED TEST UNIT CIRCUIT

DWG SIZE: B3 | ISSUE: 14A

AT&T BELL LABORATORIES | SD -2P077-01 | SHEET: A3

FS 1
POWER CIRCUIT

P/O SD-50034-01

-48 BAT
F1 5A
-48 RTN
P1, 16GA

+5.1A
(M) 495FB POWER UNIT
(N) 495A POWER UNIT
004-042

006-008, 106-108
003-005, 102-104
109
110
045-056, 145-156 → +5.1A
018, 118 ← HW
032-043, 132-143 → D
113
119 ← HW
017 5-I-SENSE
117 5-I-SENSE
2B/G1, 3D/E1, 4G0
P 5-I-SENSE A
5-I-SENSE A
5D/H0 (VIA CAD 2, 19)
000-001, 100-101 → E

F6 5A
P6, 16GA

+5.1B
(M) 495FB POWER UNIT
(N) 495A POWER UNIT
004-114

006-008, 106-108
003-005, 102-104
109
110
3C/D0 ALM00 014
045-056, 145-156 → +5.1B
032-043, 132-143 → D
113
118
018
119
P +SENSE
-SENSE
5A/G5 (VIA CAD 20, 21)
017
117
P 5-I-SENSE B
5-I-SENSE B
5D/G6 (VIA CAD 3, 20, 21)
000-001, 100-101 → E

F2 2A
P2, 16GA

+12
(M) 494MA POWER UNIT
(N) 494E POWER UNIT
004-050

006-008, 106-108
003-005, 102-104
109
110
045-056, 145-156 → +12
018, 118 ← HW
019
032-043, 132-143 → A
119
113 → A
000-001, 100-101 → E

F3 2A
P3, 16GA

-12
(M) 494MA POWER UNIT
(N) 494E POWER UNIT
004-058

006-008, 106-108
003-005, 102-104
109
110
3C/E0 ALM06 014
032-043 132-143 → -12
119
045-056 145-156 → A
018, 118
019
113 → A
000-001, 100-101 → E

QUIET GRD → B
16GA

P/O SD-50034-01

-48 BAT
F4 5A
-48 RTN
P4, 16GA

+70, +150
495D POWER UNIT
004-074

006-008, 106-108
003-005, 102-104
HW
122, 022-023
3C/E0 ALM04 014
109
110
045-056, 145-156 → +150
018, 118 ← HW
019
024, 123, 124 → +70
032-043, 132-143 → A
119
113 → D
000-001, 100-101 → E

F5 5A
P5, 16GA

-150
495D POWER UNIT
004-090

006-008, 106-108
003-005, 102-104
3C/D0 ALM02 0M
109
110
032-043, 132-143 → -150
119
045-056, 145-156 → A
018, 118
019
113 → D
000-001, 100-101 → E

F7 0.5A → -48(A)
F8 0.5A → -48(B)
F9 0.5A → -48(C)
HW, 16GA → B

+12
(M) 494MA POWER UNIT
(N) 494E POWER UNIT
004-122
(SEE NOTE 1)

NC 006-008, 106-108
NC 003-005, 102-104
109
110
045-056, 145-156 → +12
018, 118, 019
032-043, 132-143 → A
119
113 → D
000-001, 100-101 → E

-12
(M) 494MA POWER UNIT
(N) 494E POWER UNIT
004-130
(SEE NOTE 1)

NC 006-008, 106-108
NC 003-005, 102-104
109
110
032-043, 132-143 → -12
119
045-056, 149-156 → A
018, 118, 019
113 → D
000-001 100-101 → E

NOTES:

1. ON 494E POWER UNITS, LOCATIONS 004-122, 004-130 ARE NOT USED. CORRESPONDING LUGS ARE NOT USED.

+12		-12	
E28	004-126, 007	E30	004-134, 007
E29	004-126, 003	E31	004-133, 001

COPYRIGHT © 1988 AT&T
ALL RIGHTS RESERVED

DIRECTLY CONNECTED TEST UNIT CIRCUIT

DWG SIZE	ISSUE
A3	11B

AT&T BELL LABORATORIES | SD -2P077-01 | SHEET B1

PART OF FS 2
DCTU CONTROLLER CIRCUIT

Ⓧ P/O DCTU CONTROLLER
P/O DCTUCTL
CONTROL
SMEZE
004-010

NC D-TPI 105

SANITY TIMER — 15.1 — 089 D.SAN 3C/B0

OSC

CPUCLK — CLOCK DIVIDER — 151 3MHZ CLK 3C/C0

CLK0 CLK1 CLK2

NC D.RDY 048

MAC8 CPU

PROGRAMMABLE INTERVAL TIMER — UCLK 28/D4

3C/B7 D.IMRST 121

RESET CNTL CKT

NC D.NMIR 057

38/C7, 3D/C7 D.WAIT 148 (HW)

NC D.SWAIT 022

INTERFACE CONTROLLER FOR MAC 8

DMAACK 28/B3

DMAACK

A0, A1

CNTL BUS

HA0, HA1

ADDR BUS 28/C3

BUFFER

HW (SEE NOTE 20)

114	(004-007,114)	D.AB00	D.AB00	16A/E1, 16B/E0 (VIA CAD 19,20,21)
014	(004-007,113)	D.AB01	D.AB01	3D/C1, 4F1
113	(004-007,112)	D.AB02	D.AB02	
013	(004-007,111)	D.AB03	D.AB03	3D/C1
112	(004-007,110)	D.AB04	D.AB04	3D/C1, 4F1
012	(004-007,109)	D.AB05	D.AB05	
111		D.AB06	D.AB06	3D/C0
011		D.AB07	D.AB07	
110		D.AB08	D.AB08	
010		D.AB09	D.AB09	
109		D.AB10	D.AB10	
009		D.AB11	D.AB11	
108		D.AB12	D.AB12	
008		D.AB13	D.AB13	
107		D.AB14	D.AB14	
007		D.AB15	D.AB15	

3C/D7 D.IREQ06 034
NC D.IREQ03 134
3B/C7 D.IREQ04 035
3C/B7 D.IREQ09 195
16A/G0, 16B/F4 (VIA CAD 19,20,21) D.IREQ01 (004-007,136) 036
3C/B7 D.IREQ00 136 (HW (SEE NOTE 20))

PROGRAMMABLE INTERRUPT CONTROLLER

IACK — CNTL BUS 28/B3

CNTL BUS

DATA BUS

IREQ2 28/C2

DATA BUS 28/D4

LONG TERM TONE GENERATOR

032 LTT0
033 LTT1 — P
16A/D8, 16B/D3 (VIA CAD 19,20,21)

POWER DATA

CP	EQPT LOC	A GRD	D GRD	+5.1A TERM.	+12 TERM.	-12 TERM.
SN422	004-010	003, 004, 005, 051, 052, 053	000, 001, 002, 054, 055, 056	100, 101, 102, 154, 155, 156	123, 124	132, 133

COPYRIGHT © 1988 AT&T
ALL RIGHTS RESERVED

DIRECTLY CONNECTED TEST UNIT CIRCUIT

DWG SIZE 65 | ISSUE 6A

AT&T BELL LABORATORIES | SD -2P077-01 | SHEET B2A

PART OF FS2
DCTU CONTROLLER CIRCUIT

P/O DCTU CONTROLLER
P/O DCTUCTL
CONTROL
SN 422
004-010

LOC 004-018 ONLY

HW, (SEE NOTE 20)

16A/F1, 16B/F0 (VIA CAD 19,20,21)

NC GPIB-DREQ 047

GENERAL PURPOSE INTERFACE

BUS ADAPTER INTERFACE

CNTL BUS

IRREQ2 2A/E4

2A/E4 CNTL BUS

2A/C6 DMAACK

DATA BUS

2A/D4 ADDR BUS

RANDOM ACCESS MEMORY 4 KILOBYTES

READ ONLY MEMORY 8-16 KILOBYTES

DATA BUS 2A/E5

BI-DIRECTIONAL BUFFER

DMAACK

BUFFER

CNTL BUS

2A/C6 UCLK

BUFFER

BI-DIRECTIONAL BUFFER

118	(004-007,119)	D.DB00	D.DB00
018	(004-007,118)	D.DB01	D.DB01
117	(004-007,117)	D.DB02	D.DB02 — 3C/E0, 4E6
017		D.DB03	D.DB03
116	(004-007,116)	D.DB04	D.DB04
016		D.DB05	D.DB05 — 3C/E0
115	(004-007,115)	D.DB06	D.DB06 — 3C/E0, 4E6
015			D.DB07 — 3C/E0
020	(004-007,121)	D.RDB	D.RDB — 16A/D1, 16B/D0 (VIA CAD 19,20,21)
119	(004-007,120)	D.WRB	D.WRB — 3D/B1, 4D1
021		D.RDPB	D.RDPB
120		D.WRPB	D.WRPB — 3D/F1, 3D/F1
122	(004-007,122)	D.CMRST	D.CMRST — 5A/C0, 5A/C6 (VIA CAD 19,20,21)
		D.IFCB	D.IFCB — 3D/D1, 4D1
137		D.IACKB	D.IACKB — NC
038		D.IOEB	D.IOEB — 3D/D1
019		D.CLK_OUT_B	
050		D.U.CLKB	NC
147		GPIB_DACKB	
143	(004-007,143)	EOIB	
146	(004-007,146)	SRQB	
144	(004-007,144)	DAVB	
046	(004-007,142)	ATNB	
045	(004-007,145)	IFCB	
044	(004-007,144)	NRFDB	
145	(004-007,145)	NDACB	
043		RENB	5B/F6 OR TESTING AS REQUIRED (VIA CAD 17)
042		DIB1	
142		DIB2	
041		DIB3	
141		DIB4	
040		DIB5	
140		DIB6	
039		DIB7	
139		DIB8	

184 S.I. SENSE A 005 — S.I. SENSE A 106 — R_P

COPYRIGHT © 1988 AT&T
ALL RIGHTS RESERVED

DIRECTLY CONNECTED TEST UNIT CIRCUIT

DWG SIZE A5 | ISSUE 6A

AT&T BELL LABORATORIES | SD -2P077-01 | SHEET B28

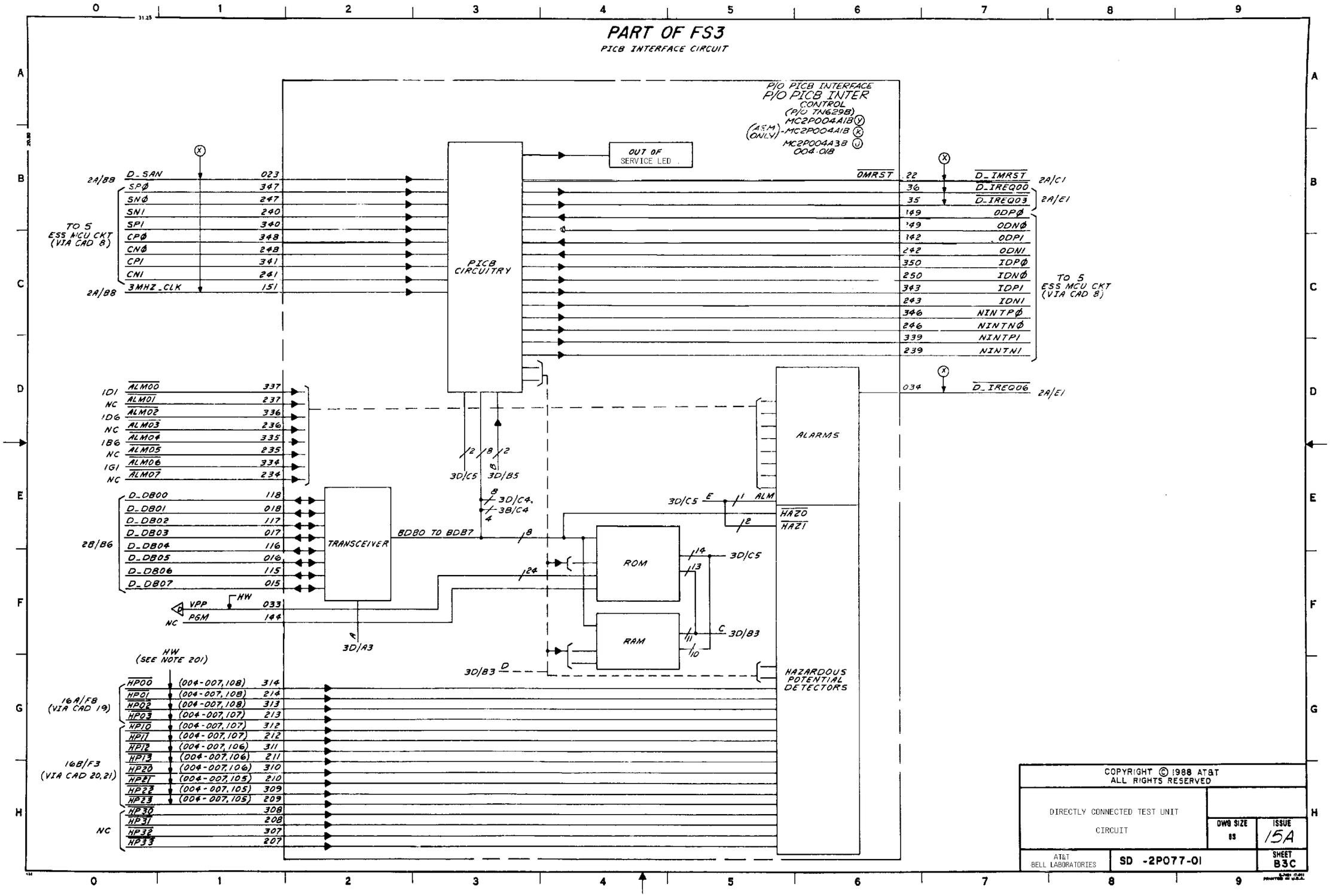
PART OF FS3
PICB INTERFACE CIRCUIT
P/O PICB INTERFACE
P/O PICB INTER
CONTROL
(P/O TN629B)
MC2P004A1B
(ASM ONLY)-MC2P004A1B
MC2P004A3B
004-018
OUT OF SERVICE LED
PICB CIRCUITRY
TRANSCEIVER
ALARMS
ROM
RAM
HAZARDOUS POTENTIAL DETECTORS
TO 5 ESS MCU CKT (VIA CAD 8)
D_SAN
SPØ
SNØ
SN1
SP1
CPØ
CNØ
CP1
CN1
3MHZ_CLK
OMRST
D_IMRST
D_IREQ00
D_IREQ03
ODPØ
ODNØ
ODP1
ODN1
IDPØ
IDNØ
IDP1
IDN1
NINTPØ
NINTNØ
NINTP1
NINTN1
D_IREQ06
ALM00
ALM01
ALM02
ALM03
ALM04
ALM05
ALM06
ALM07
D_DB00
D_DB01
D_DB02
D_DB03
D_DB04
D_DB05
D_DB06
D_DB07
VPP
PGM
HW
HW (SEE NOTE 201)
HP00
HP01
HP02
HP03
HP10
HP11
HP12
HP13
HP20
HP21
HP22
HP23
HP30
HP31
HP32
HP33
16A/F8 (VIA CAD 19)
16B/F3 (VIA CAD 20,21)
BD80 TO BD87
3D/C5
3D/B5
3D/C4,
3B/C4
3D/A3
3D/B3
ALM
HAZ0
HAZ1
COPYRIGHT © 1988 AT&T
ALL RIGHTS RESERVED
DIRECTLY CONNECTED TEST UNIT
CIRCUIT
DWG SIZE
ISSUE
15A
AT&T BELL LABORATORIES
SD -2P077-01
SHEET
B3C

PART OF FS3

PICB INTERFACE CIRCUIT

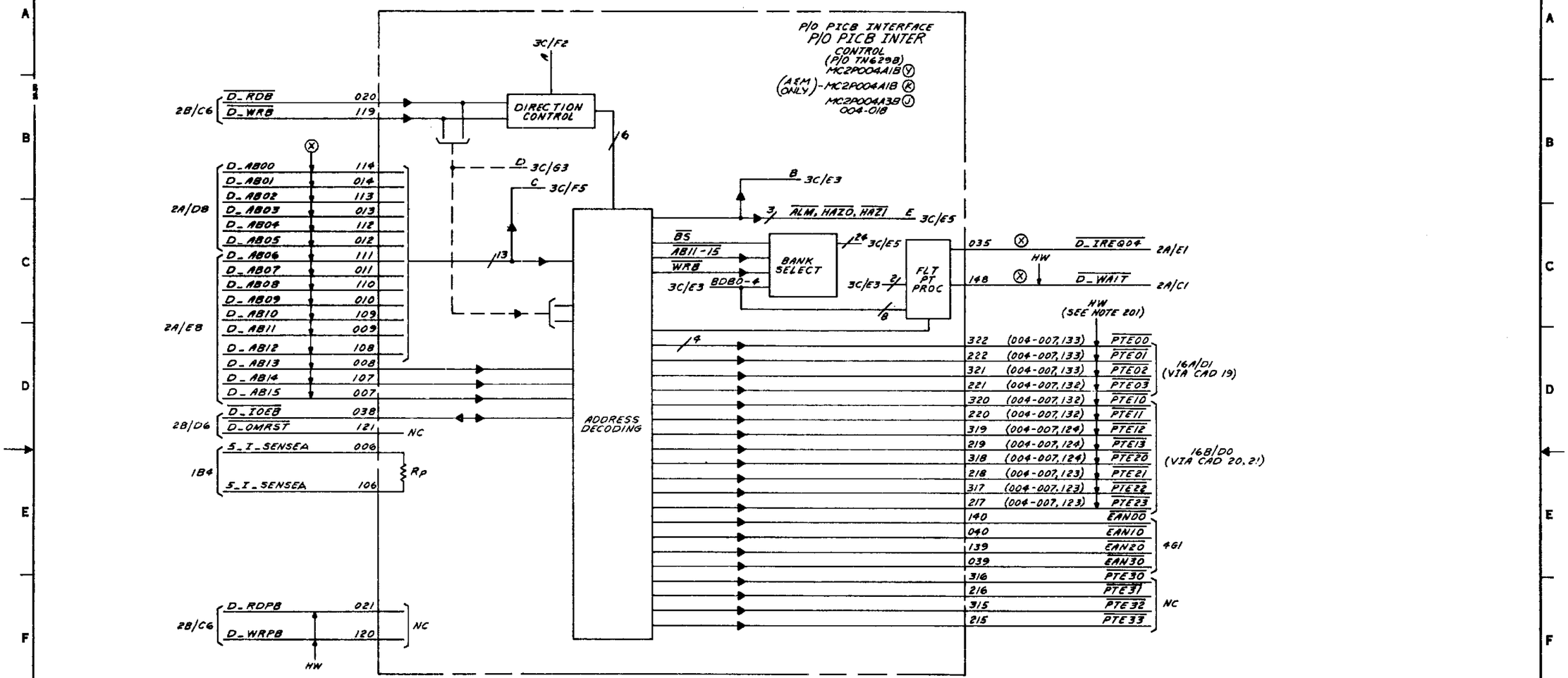

POWER DATA

CP	EQPT LOC	A GRD	B GRD	+5.1A TERM.	+12 TERM.	-12 TERM.
MC2P004A3B (TN629B) (Y) MC2P004A1B (TN629)	004-018	003, 004, 005, 051, 052, 053	000, 001, 002, 054, 055, 056	100, 101, 102, 154, 155, 156	123, 124	132, 133

COPYRIGHT © 1988 AT&T
ALL RIGHTS RESERVED

DIRECTLY CONNECTED TEST UNIT CIRCUIT

DWG SIZE: 00 | ISSUE: 15A

AT&T BELL LABORATORIES | SD -2P077-01 | SHEET 830

FS 4
EQUIPMENT ACCESS NETWORK CIRCUITS

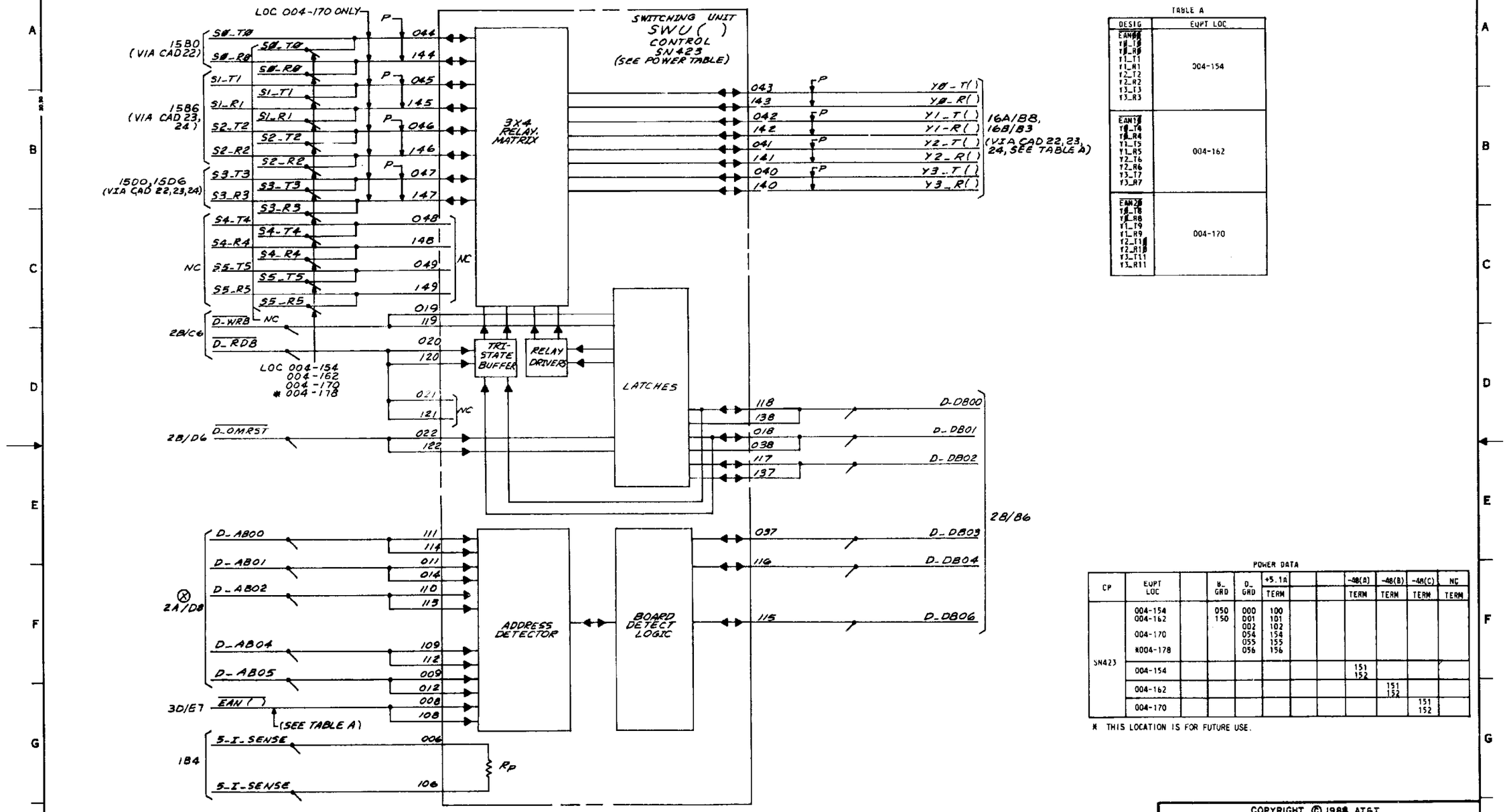

TABLE A

DESIG	EQPT LOC
EAN0 Y0_T0 Y0_R0 Y1_T1 Y1_R1 Y2_T2 Y2_R2 Y3_T3 Y3_R3	004-154
EAN1 Y0_T4 Y0_R4 Y1_T5 Y1_R5 Y2_T6 Y2_R6 Y3_T7 Y3_R7	004-162
EAN2 Y0_T8 Y0_R8 Y1_T9 Y1_R9 Y2_T10 Y2_R10 Y3_T11 Y3_R11	004-170

POWER DATA

CP	EQPT LOC		B_ GRD	D_ GRD	+5.1A TERM			-48(A) TERM	-48(B) TERM	-48(C) TERM	NC TERM
SN423	004-154 004-162 004-170 *004-178		050 150	000 001 002 054 055 056	100 101 102 154 155 156						
	004-154							151 152			
	004-162								151 152		
	004-170									151 152	

* THIS LOCATION IS FOR FUTURE USE.

COPYRIGHT © 1988 AT&T
ALL RIGHTS RESERVED

DIRECTLY CONNECTED TEST UNIT CIRCUIT

DWG SIZE: 4S

ISSUE: 13AC

AT&T BELL LABORATORIES

SD -2P077-01

SHEET: B4

PART OF FS 5

PMU CONTROLLER, INTERFACE AND MEMORY CIRCUIT

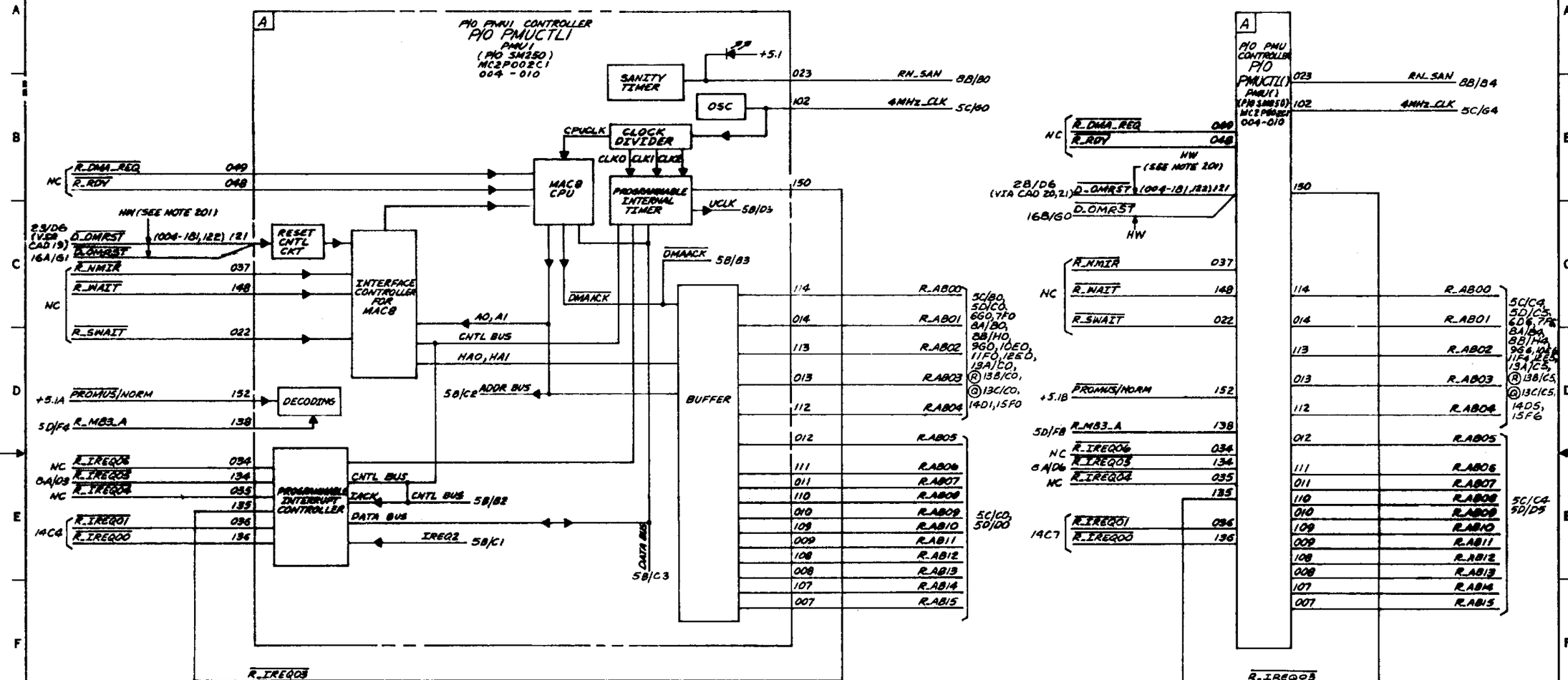

POWER DATA

CP	EQPT LOC	A_ GRD	D_ GRD		+5.1A	+12	-12
				PMU0	+5.1A	+12	-12
				PMU1	+5.1B	+12	-12
				PMU2	+5.1B	+12	-12
SM250	004-010	003 004 005 051 052 053	000 001 054 055 056		TERM. 100 101 153 154 155 156	TERM. 123 124	TERM. 132 133

SEE PROPRIETARY NOTICE ON COVER PAGE

DIRECTLY CONNECTED TEST UNIT CIRCUIT

DWG SIZE 6S

ISSUE 13AC

AT&T BELL LABORATORIES

SD -2P077-01

SHEET B5A

PART OF FS 5

PMU CONTROLLER, INTERFACE AND MEMORY CIRCUIT

P/O PMU CONTROLLER
P/O PMUCTL1
PMU1
(P/O SM250)
MC8P002C1
004-010

5A/E2 CNTL BUS

5A/D2 ADDR BUS

5A/E4 DATA BUS

5A/C4 UCLK

GENERAL PURPOSE INTERFACE

BUS ADAPTER INTERFACE

RANDOM ACCESS MEMORY 4 KILOBYTES

READ ONLY MEMORY 8-K KILOBYTES

BI-DIRECTIONAL BUFFER

BUFFER

BUFFER

BI-DIRECTIONAL BUFFER

SEE TABLE A

HW

GPIB2 103
GPIB1 104
GPIB0 105

+5.1A

VPP 153

CNTL BUS

TRIGG 5A/E2

DMAACK

DATA BUS

OE/VPP

R.I. SENSEA 006

NC

R.I. SENSEA 106

RP

118	R_DB00	5C/E0, 5D/B0, 6B0, 7C0, 8A/C0, 8B/G0, 9B0, 10D0, 11C0, 12D0, 13A/B0, (R)13B/B0, (A)13C/B0, 14D4, 15D0
018	R_DB01	
117	R_DB02	
017	R_DB03	
116	R_DB04	
016	R_DB05	
115	R_DB06	
015	R_DB07	
021	R_RDPB	5C/G0, 6G0, 7E0, 8A/C0, 8B/F0, 9D0, 10C0, 11B0, 12F0, 13A/B0, (R)13B/B0, (A)13C/B0, 14C0, 15F0
120	R_WRPB	
024	R_RDB	5C/D0, 5D/E0
020	R_WRB	
119	R_OMRST	5C/B0, 5D/A0
122	R_IOEB	5C/G0, 5D/A0
038	R_CLK_OUT_B	8A/F0
002	R_U_CLKB	8A/F0
050	R_DMA_ACKB	
149	R_IACKB	
137	GPIB_DACKB	NC
147	GPIB_DRQ	
047	EOIB	2B/F6 & OTHER CPS SM250, AS REQUIRED OR FOR TESTING PURPOSES ONLY (VIA CAD 15,17,18)
143(004-010,056)	SRQB	
146(004-010,055)	DAVB	
144(004-010,054)	ATNB	
046(004-010,056)	IFCB	
045(004-010,055)	NRFDB	
044(004-010,054)	NDACB	
145(004-010,053)	RENB	
043		
042	DIB1	
142	DIB2	
041	DIB3	
141	DIB4	
040	DIB5	
140	DIB6	
039	DIB7	
139	DIB8	

HW (SEE NOTE 201)

NW

TABLE A

FROM	TO		
DESIG	PMU0	PMU1	PMU2
GPIB0	D_GRD	NC	D_GRD
GPIB1	NC	NC	D_GRD
GPIB2	D_GRD	D_GRD	NC

P/O PMU-CONTROLLER
P/O PMUCTL( )
PMU1
(P/O SM250)
MC8P002C1
004-010

SEE TABLE A

HW

GPIB2 103
GPIB1 104
GPIB0 105

+5.1B VPP 153

NC GPIB_DACKB 147

R.I. SENSEB 006

NC

R.I. SENSEB 106

118	R_DB00	5C/E4, 5D/B5, 6B6, 7C7, 8A/C4, 8B/G4, 9B6, 10C6, 11B4, 12D5, 13A/A5, (R)13B/B5, (A)13C/A5, 14D7, 15D6
018	R_DB01	
117	R_DB02	
017	R_DB03	
116	R_DB04	
016	R_DB05	
115	R_DB06	
015	R_DB07	
021	R_RDPB	5C/F5, 6D6, 7E7, 8A/B4, 8B/F4, 9D6, 10C6, 11E4, 12F5, 13A/B5, (R)13B/B5, (A)13C/B5, 14C5, 15F6
120	R_WRPB	
024	OE/VPP	
020	R_RDB	5C/D4, 5D/E5
119	R_WRB	
122	R_OMRST	5C/B5, 5D/A5
038	R_IOEB	5C/G4, 5D/A5
002	R_CLK_OUT_B	8A/F6
050	R_U_CLKB	8A/F6
149	R_DMA_ACKB	
137	R_IACKB	
147	GPIB_DACKB	NC
047	EOIB	2B/F6 & OTHER CPS SM250 AS REQ'D OR FOR TESTING PURPOSES ONLY (VIA CAD 16,18)
143(004-010,056)	SRQB	
146(004-010,055)	DAVB	
144(004-010,054)	ATNB	
046(004-010,056)	IFCB	
045(004-010,055)	NRFDB	
044(004-010,054)	NDACB	
145(004-010,053)	RENB	
043		
042	DIB1	
142	DIB2	
041	DIB3	
141	DIB4	
040	DIB5	
140	DIB6	
039	DIB7	
139	DIB8	

HW (SEE NOTE 201)

HW

SEE PROPRIETARY NOTICE ON COVER PAGE

DIRECTLY CONNECTED TEST UNIT CIRCUIT

DWG SIZE A3

ISSUE 13AC

AT&T BELL LABORATORIES

SD--2P077-01

SHEET B58

PART OF FS 5

PMU CONTROLLER, INTERFACE AND MEMORY CIRCUIT

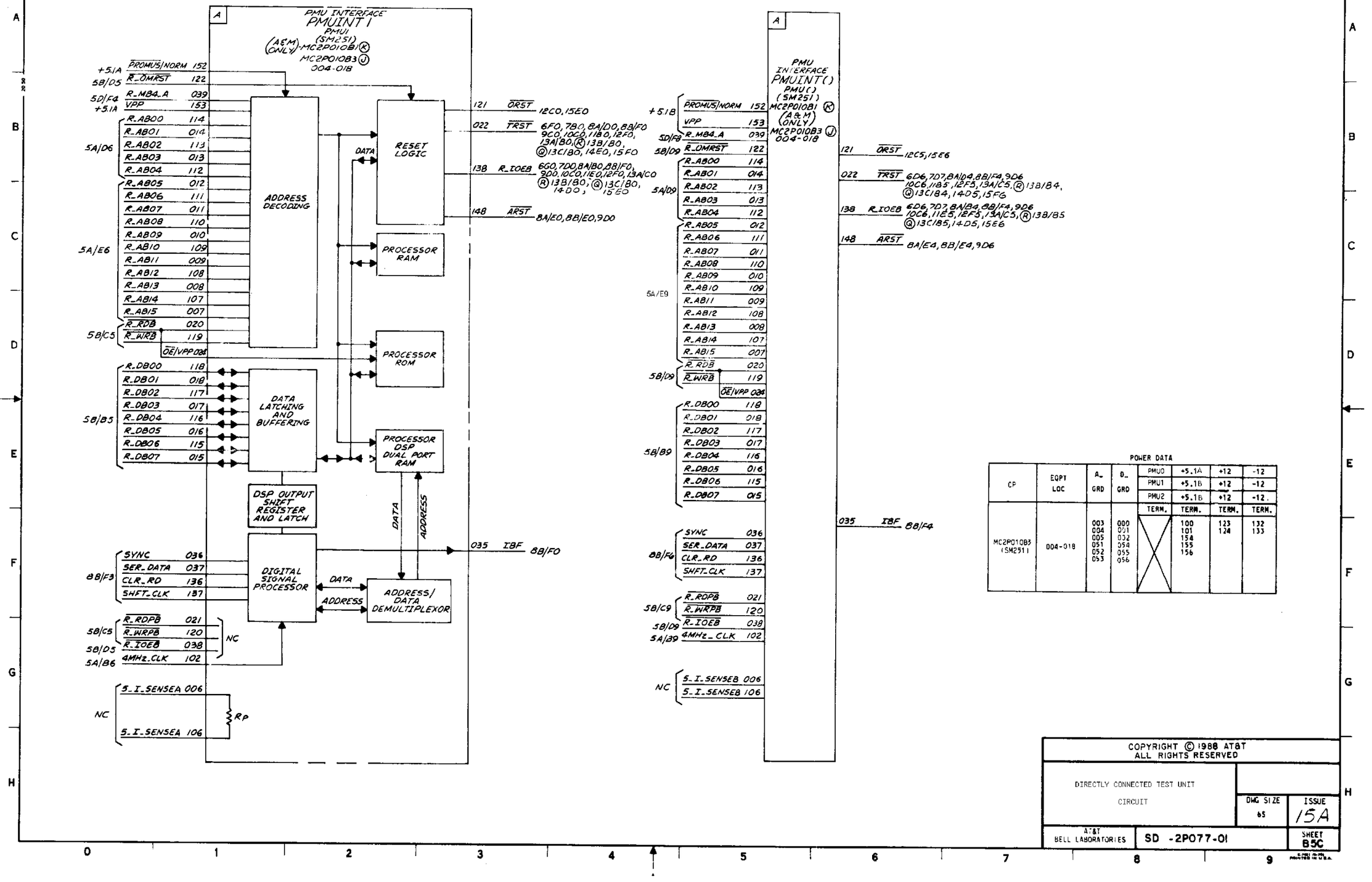

POWER DATA

CP	EQPT LOC	A_ GRD	D_ GRD	PMU0	+5.1A	+12	-12
				PMU1	+5.1B	+12	-12
				PMU2	+5.1B	+12	-12.
				TERM.	TERM.	TERM.	TERM.
MC2P010B3 (SM251)	004-018	003 004 005 051 052 053	000 001 002 054 055 056		100 101 154 155 156	123 124	132 133

COPYRIGHT © 1988 AT&T
ALL RIGHTS RESERVED

DIRECTLY CONNECTED TEST UNIT

CIRCUIT

DWG SIZE 65

ISSUE 15A

AT&T BELL LABORATORIES

SD -2P077-01

SHEET 85C

PART OF FS 5

PMU CONTROLLER, INTERFACE AND MEMORY CIRCUIT

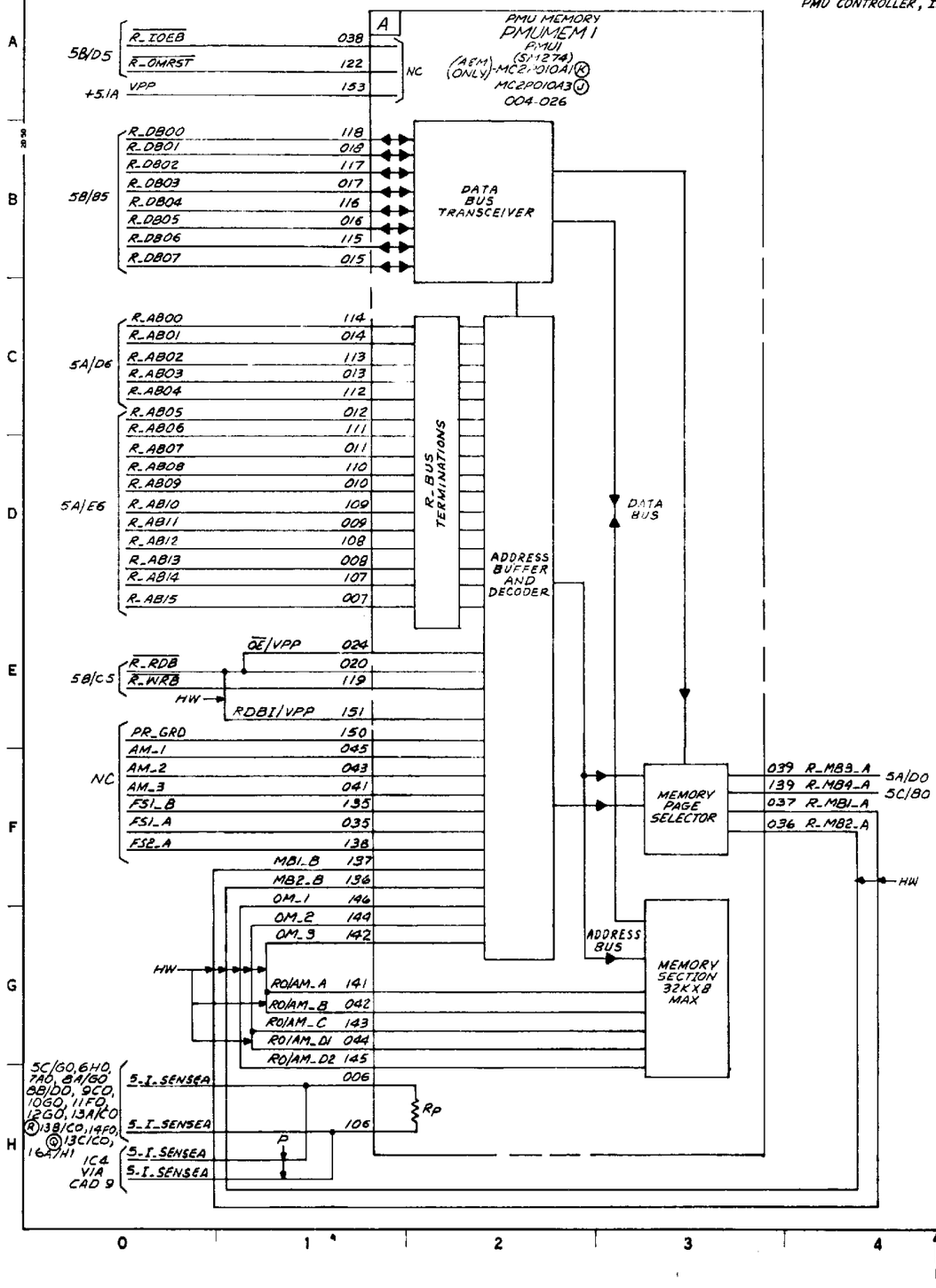

POWER DATA

CP	EQPT LOC	A_ GRD	D_ GRD	PMU0	+5.1A	+12	-12
				PMU1	+5.1B	+12	-12
				PMU2	+5.1B	+12	-12
					TERM.	TERM.	TERM.
MC2P010A3 (SM274)	004 026	003 004 005 051 052 053	000 001 054 055 056 002		100 101 102 154 155 156	123 124	132 133

COPYRIGHT © 1988 AT&T
ALL RIGHTS RESERVED

DIRECTLY CONNECTED TEST UNIT

CIRCUIT

DWG SIZE 6S

ISSUE 15A

AT&T BELL LABORATORIES

SD -2P077-01

SHEET B5D

FS 6
PROGRAMMABLE SIGNAL GENERATOR CIRCUIT

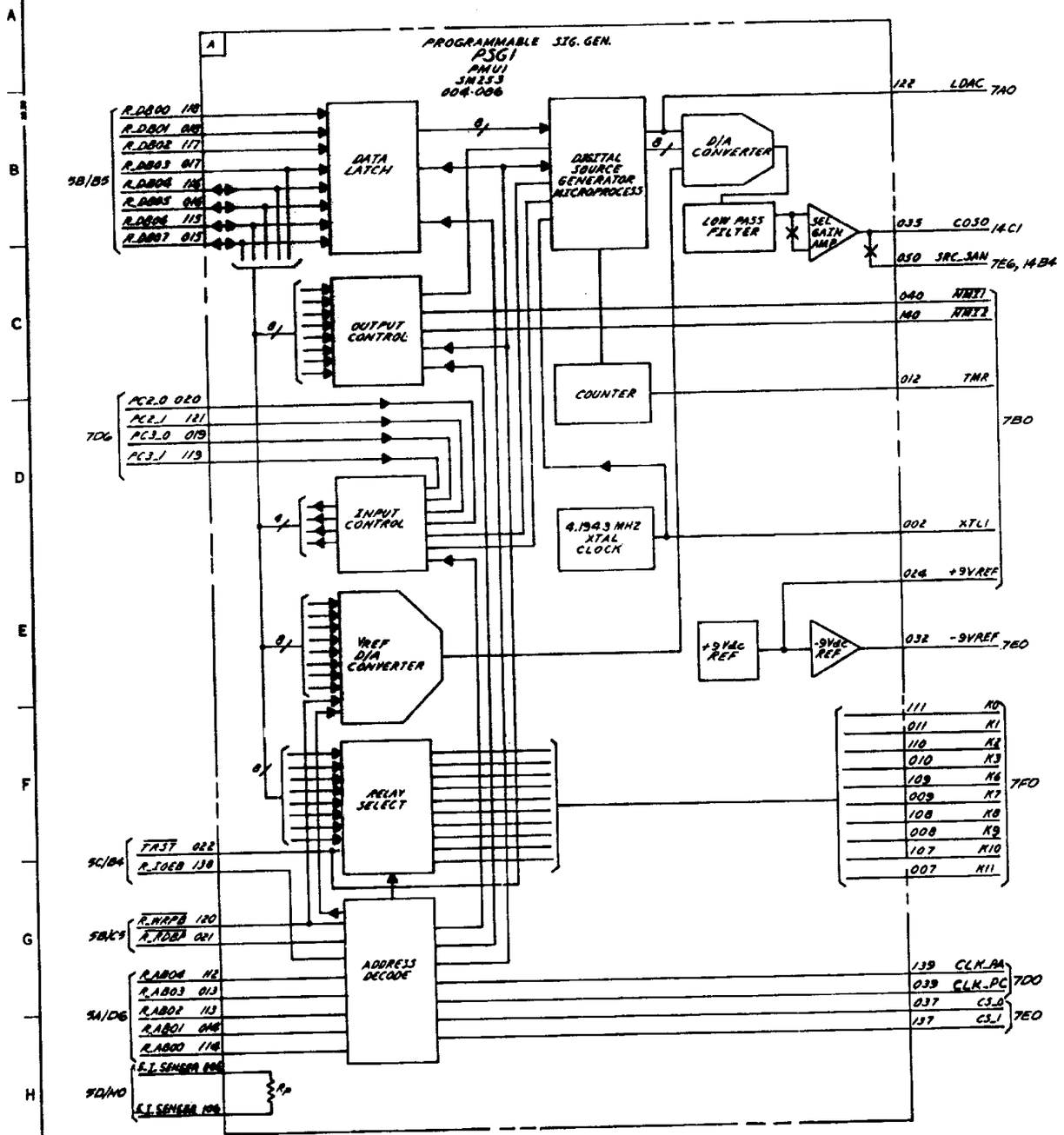

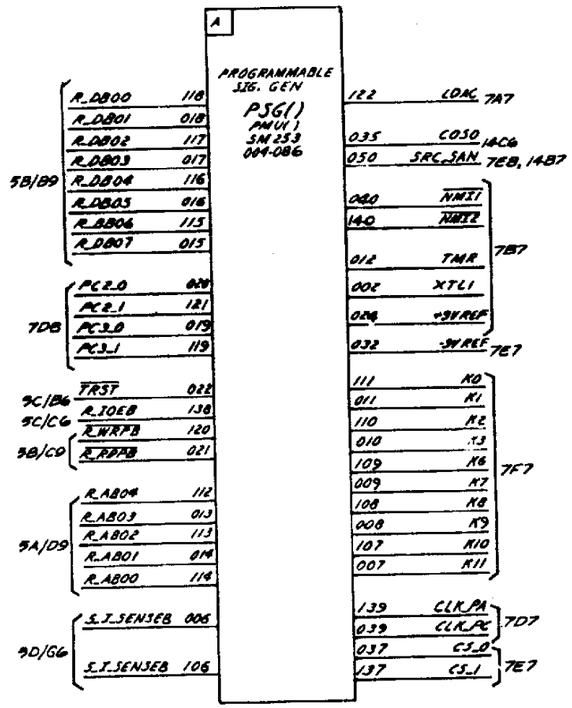

POWER DATA

CP	EQPT LOC	A_ GRD	D_ GRD	PMU0	+5.1A	+12	-12
				PMU1	+5.1B	+12	-12
				PMU2	+5.1B	+12	-12
					TERM.	TERM.	TERM.
SM253	004-086	003 004 005 051 052 053	000 001 054 055 056		100 101 102 154 155 156	123 124	132 133

SEE PROPRIETARY NOTICE ON COVER PAGE

DIRECTLY CONNECTED TEST UNIT CIRCUIT

DWG SIZE A3

ISSUE 13AC

AT&T BELL LABORATORIES

SD -2P077-01

SHEET 86

FS 7
LINE REFERENCE MODULE CIRCUIT

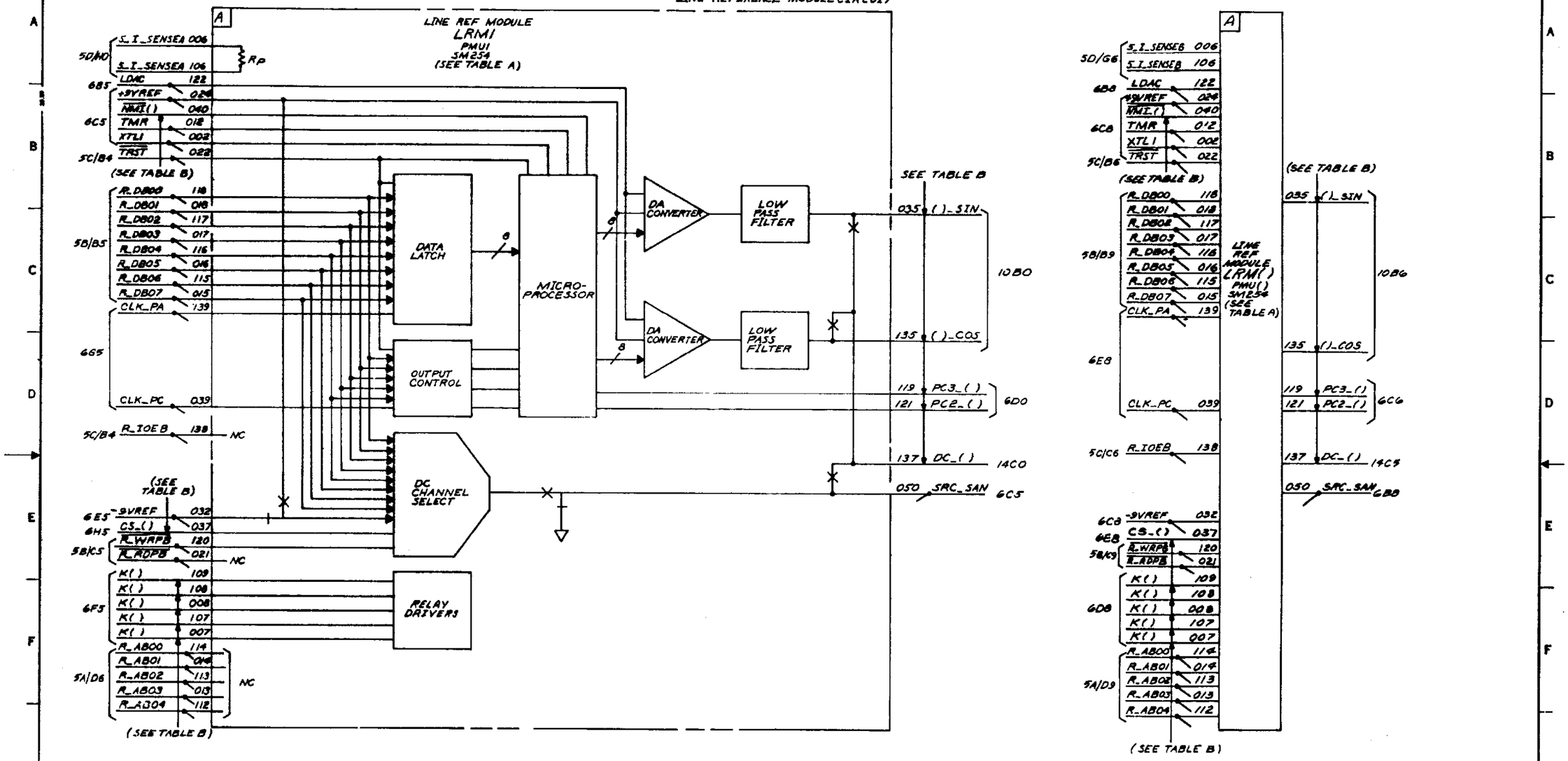

TABLE A

EQPT LOC SM254	
SHELF	LOC
PMU0	004-094 004-102
PMU1	004-094 004-102
PMU2	004-094 004-102

TABLE B

SM254			
DESIG	EQPT LOC	DESIG	EQPT LOC
NMI1 CS_0 K0 K2 K6 K7 K10 PC2_0 PC3_0 (A)_SIN (B)_COS DC_0	004-094	NMI2 CS_1 K1 K3 K8 K9 K11 PC2_1 PC3_1 (B)_SIN (A)_COS DC_1	004-102

POWER DATA

CP	EQPT LOC	A-GRD	D-GRD	PMU0	+5.1A	+12	-12
				PMU1	+5.1B	+12	-12
				PMU2	+5.1C	+12	-12
					TERM.	TERM.	TERM.
SM254	004-094 004-102	003 004 005 051 052 053	000 001 054 055 056		100 101 102 154 155 156	123 124	132 133

SEE PROPRIETARY NOTICE ON COVER PAGE

DIRECTLY CONNECTED TEST UNIT CIRCUIT

DWG SIZE 6S | ISSUE 13AC

AT&T BELL LABORATORIES | SD 1-2P077-01 | SHEET 87

PART OF FS 8

MEASUREMENT CONTROLLER 1 AND 2 CIRCUIT

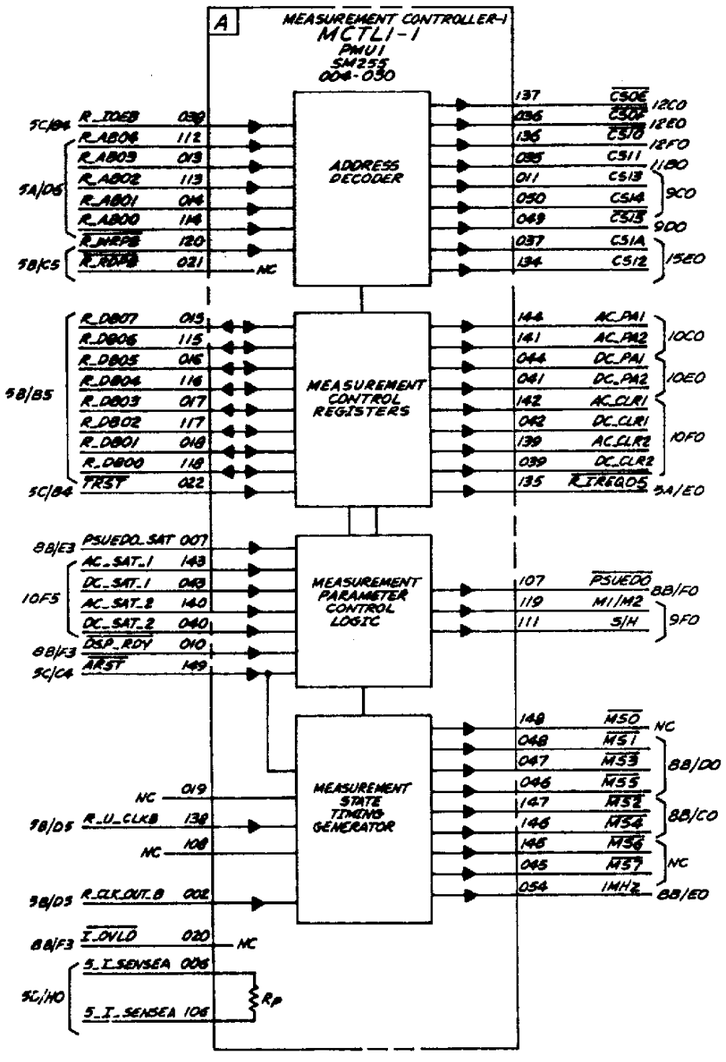

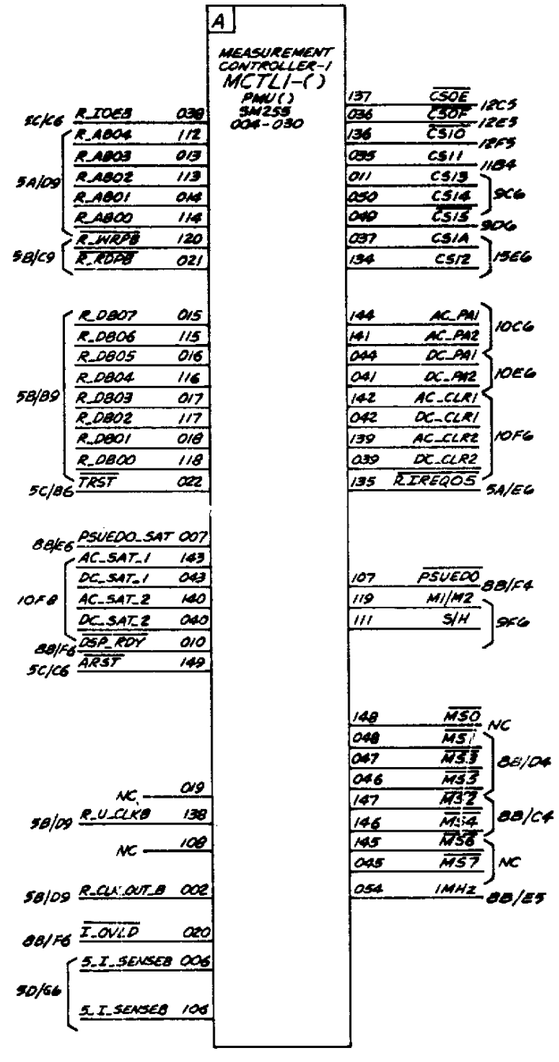

POWER DATA

CP	EQPT LOC	A_ GRD	D_ GRD				
				PMU0	+5.1A	+12	-12
				PMU1	+5.1B	+12	-12
				PMU2	+5.1B	+12	-12
SM255	004-030	003 004 005 051 052 053	D00 001 055 056		TERM. 100 101 102 154 155 156 153	TERM. 123 124	TERM. 132 133

SEE PROPRIETARY NOTICE ON COVER PAGE

DIRECTLY CONNECTED TEST UNIT CIRCUIT

DWG SIZE 65

ISSUE 13AC

AT&T BELL LABORATORIES

SD (-2P077-01

SHEET 88A

P/O FS 8

MEASUREMENT CONTROLLER 1 AND 2 CIRCUIT

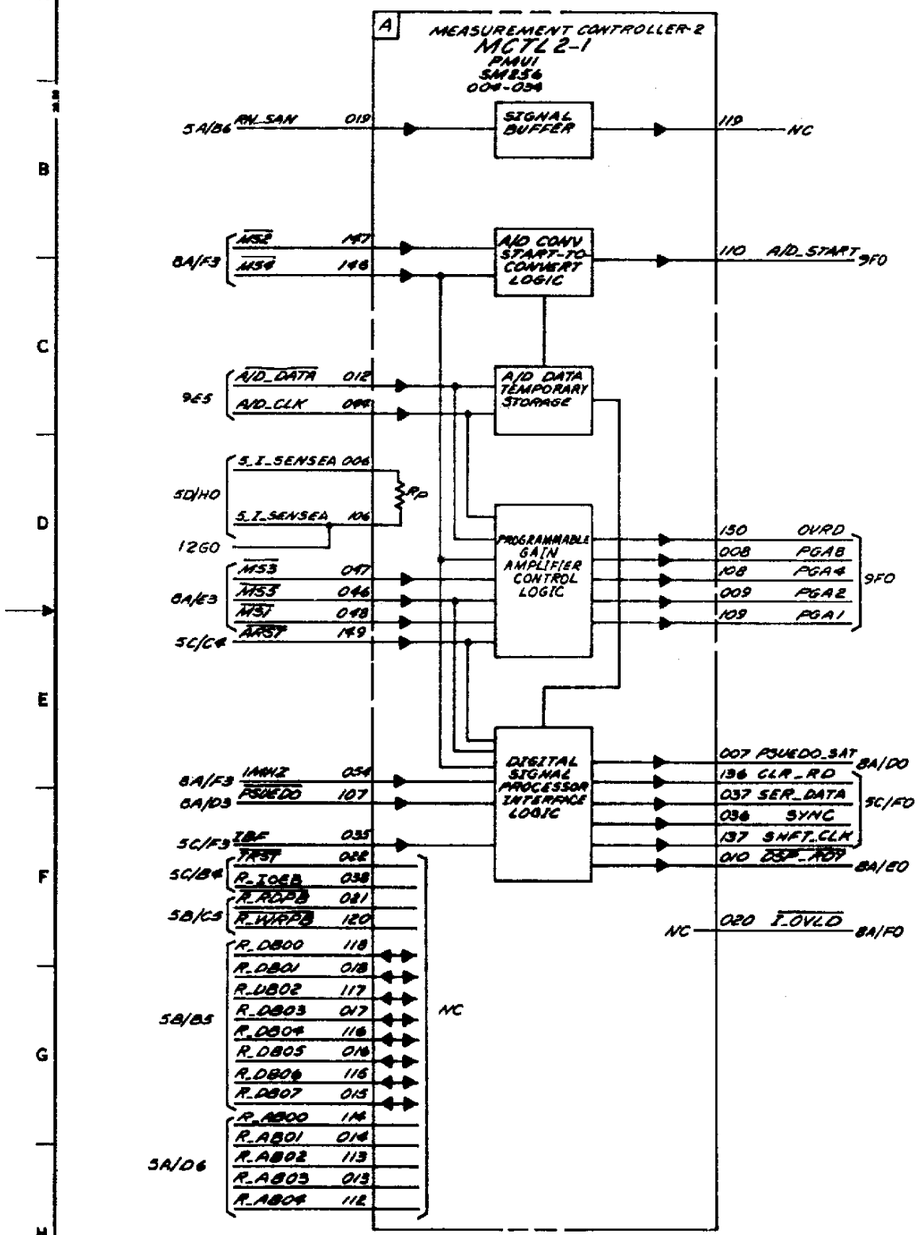

POWER DATA

CP	EQPT LOC	A_ GRD	D_ GRD				
				PMU0	+5.1A	+12	-12
				PMU1	+5.1B	+12	-12
				PMU2	+5.1B	+12	-12
SM256	004-034	003 004 005 051 052 053	000 001 002 055 056		TERM. 100 101 102 154 155 156	TERM. 123 124	TERM. 132 133

SEE PROPRIETARY NOTICE ON COVER PAGE

DIRECTLY CONNECTED TEST UNIT CIRCUIT

DWG SIZE 63

ISSUE 13AC

AT&T BELL LABORATORIES

SD -2P077-01

SHEET 888

FS 9
DATA CONVERTER CIRCUIT

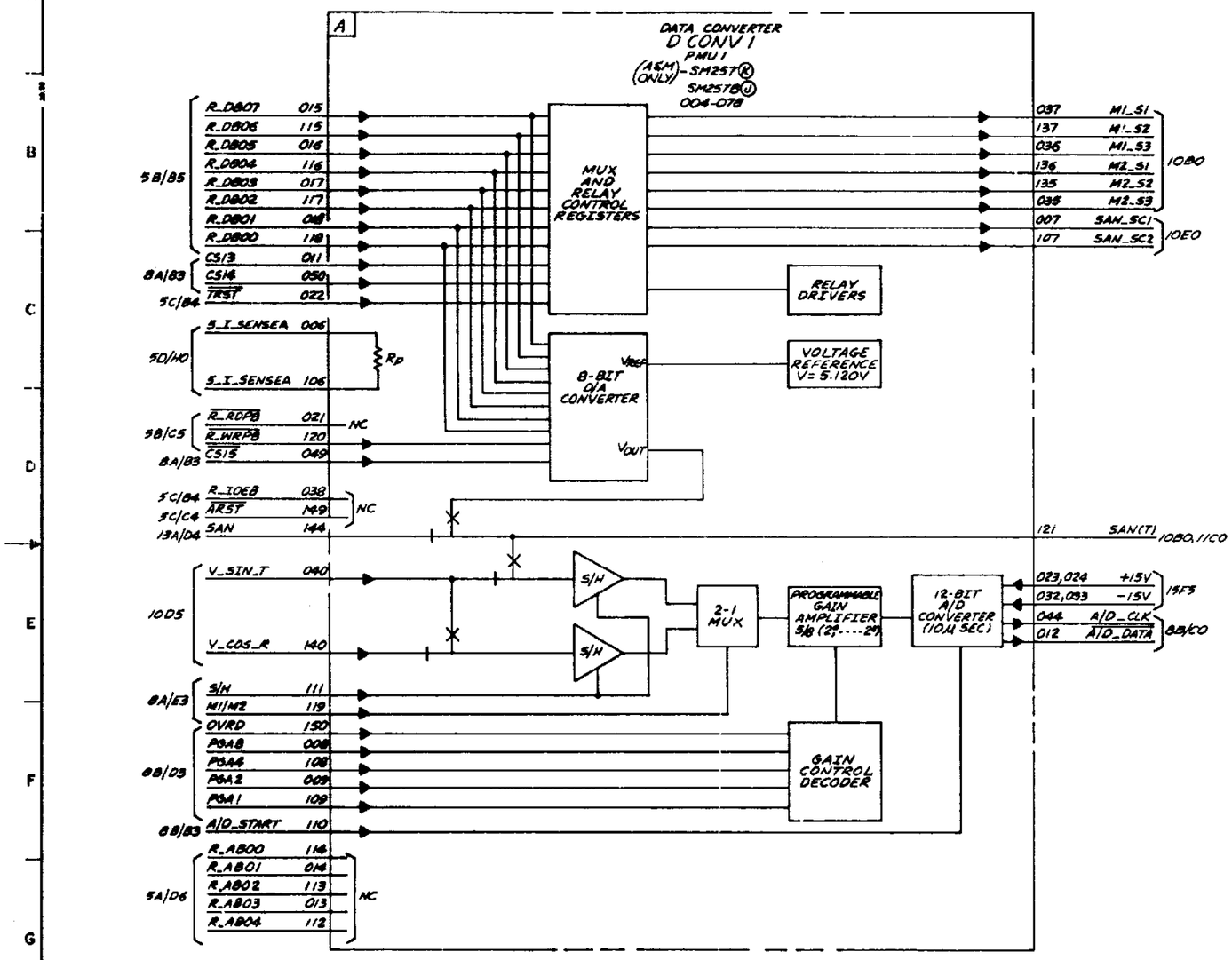

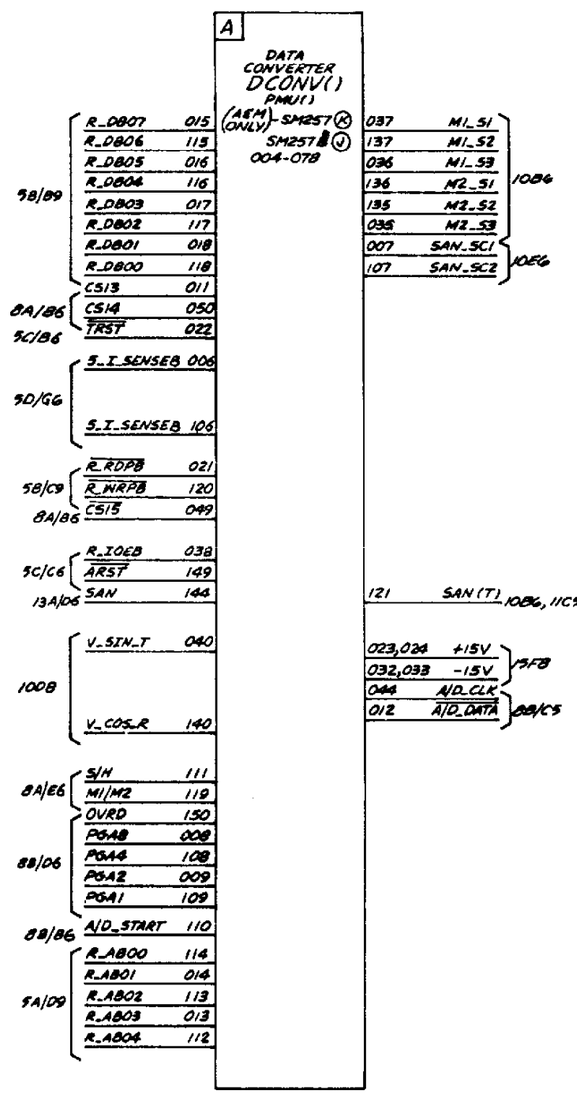

POWER DATA

CP	EQPT LOC	A_ GRD	D_ GRD	PMU0	+5.1A	+12	-12
				PMU1	+5.1B	+12	-12
				PMU2	+5.1B	+12	-12
					TERM.	TERM.	TERM.
SM257	004-078	003 004 005 051 052 053	000 001 002 054 055 056		100 101 102 154 155 156	123 124	132 133

SEE PROPRIETARY NOTICE ON COVER PAGE

DIRECTLY CONNECTED TEST UNIT CIRCUIT

DWG SIZE 6S

ISSUE 13AC

AT&T BELL LABORATORIES

SD -2P077-01

SHEET B9

FS 10

SIGNAL CONDITIONER CIRCUIT

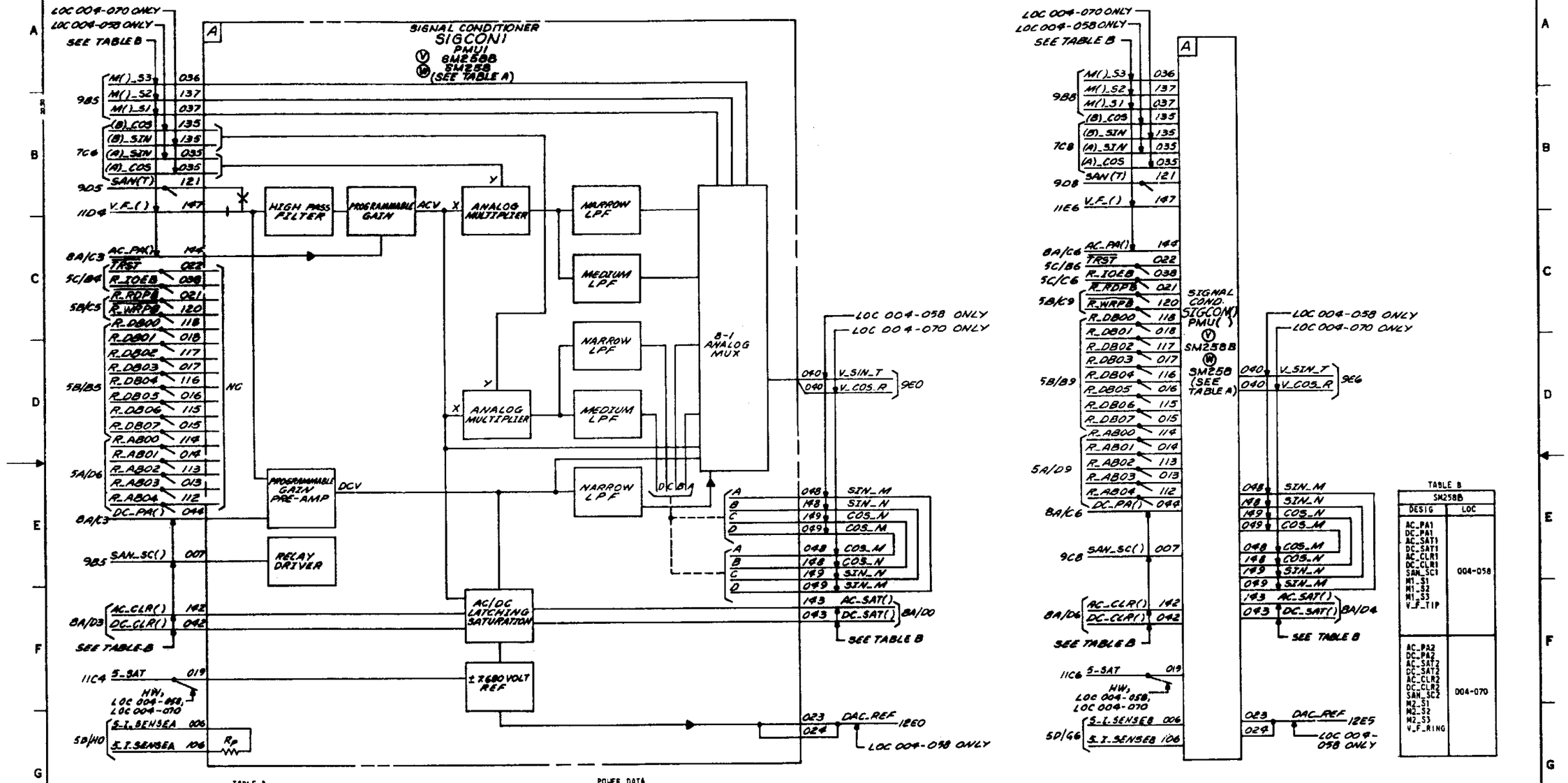

TABLE A

EQPT LOC	
SM2588	
SHELF	LOC
PMU0	004-058 004-070
PMU1	004-058 004-070
PMU2	004-058 004-070

POWER DATA

CP	EQPT LOC	A_ GRD	D_ GRD					
				PMU0	+5.1A	+12	-12	
				PMU1	+5.1B	+12	-12	
				PMU2	+5.1B	+12	-12	
					TERM.	TERM.	TERM	
V SM2588 W SM258	004-058 004-070	003 004 005 051 052 053	000 001 002 054 055 056		100 101 102 154 155 156	123 124	132 133	

SEE PROPRIETARY NOTICE ON COVER PAGE

DIRECTLY CONNECTED TEST UNIT CIRCUIT

AT&T BELL LABORATORIES	SD -2P077-01	DWG SIZE: 4S	ISSUE: 13AC	SHEET: B10

FS 11
FILTER CIRCUIT

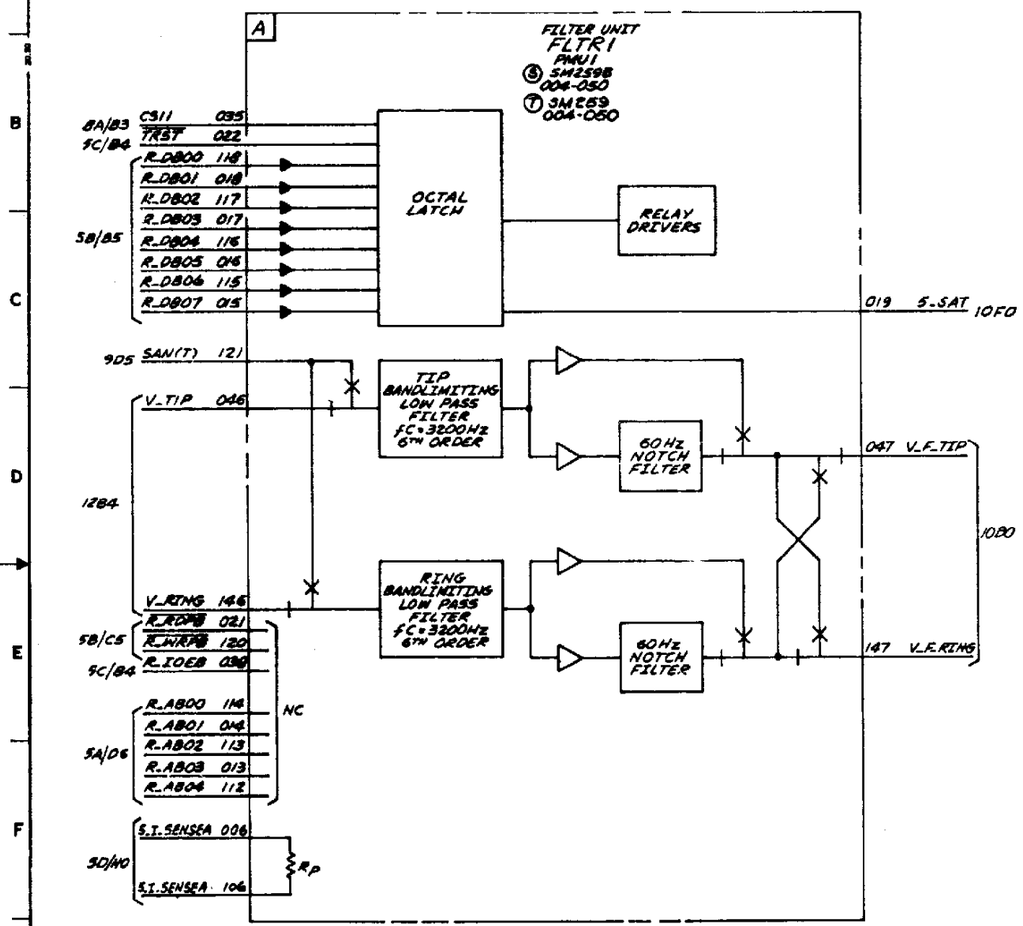

POWER DATA

CP	EQPT LOC	A_ GRD	D_ GRD		+5.1A	+12	-12
				PMU0	+5.1A	+12	-12
				PMU1	+5.1B	+12	-12
				PMU2	+5.1B	+12	-12
					TERM.	TERM.	TERM.
S SM2598 T SM259	004-050	003 004 005 051 052 053	000 001 002 054 055 056		100 101 102 154 155 156	123 124	132 133

SEE PROPRIETARY NOTICE ON COVER PAGE

DIRECTLY CONNECTED TEST UNIT CIRCUIT

DWG SIZE 63 | ISSUE 13AC

AT&T BELL LABORATORIES | SD -2P077-01 | SHEET B11

FS 12
CURRENT SENSOR CIRCUIT

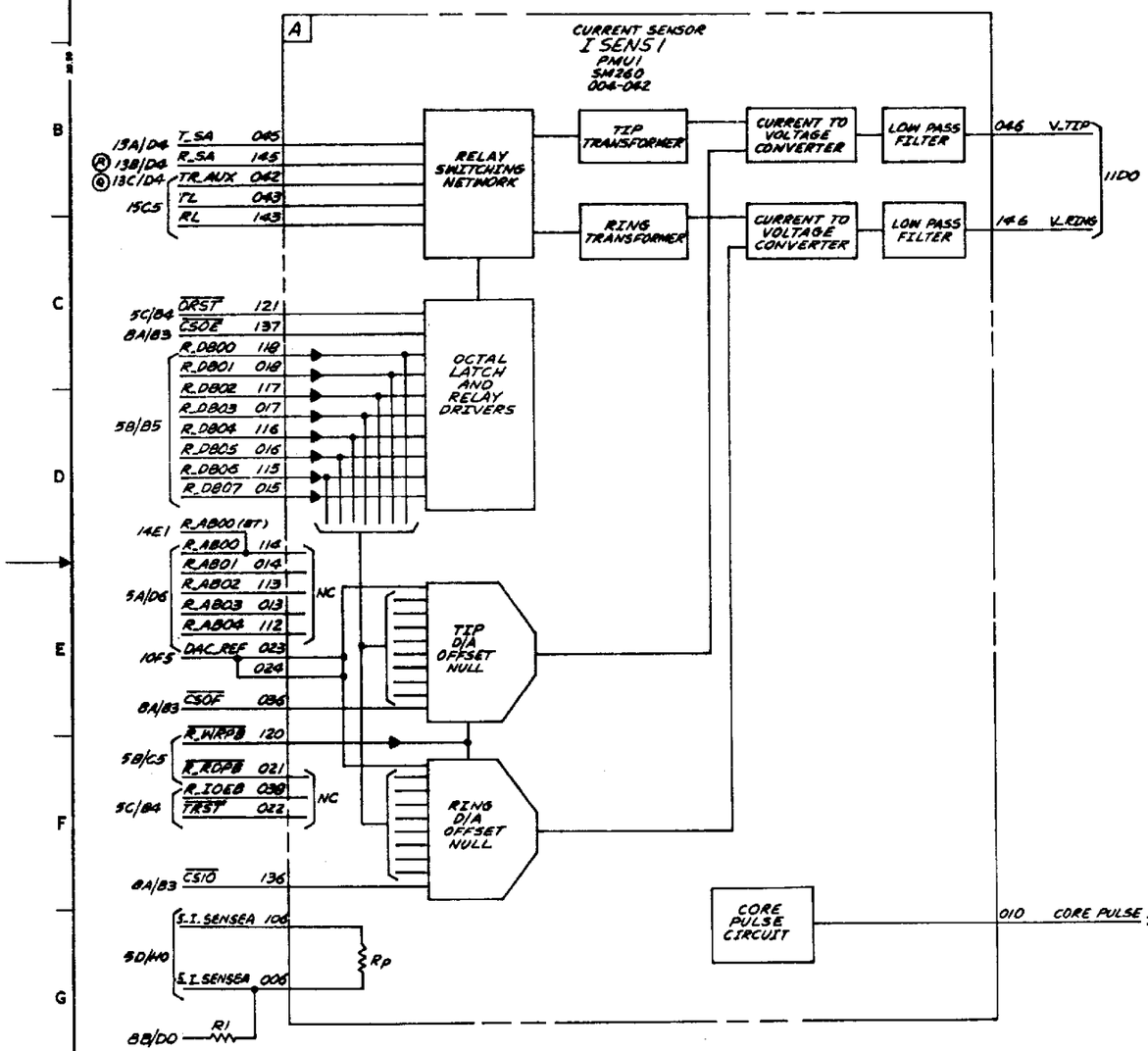

POWER DATA

CP	EQPT LOC	A_ GRD	D_ GRD			+5.1A	+12	-12
					PMU0	+5.1A	+12	-12
					PMU1	+5.1B	+12	-12
					PMU2	+5.1B	+12	-12
						TERM.	TERM.	TERM.
SM260	004-042	003 004 005 051 052 053	000 001 002 054 055 056			100 101 102 154 155 156	123 124	132 133

SEE PROPRIETARY NOTICE ON COVER PAGE

DIRECTLY CONNECTED TEST UNIT CIRCUIT

DWG SIZE	ISSUE
65	13AC

AT&T BELL LABORATORIES	SD -2P077-01	SHEET B12

P/O FS 13

TIP AND RING TERMINATION CIRCUIT

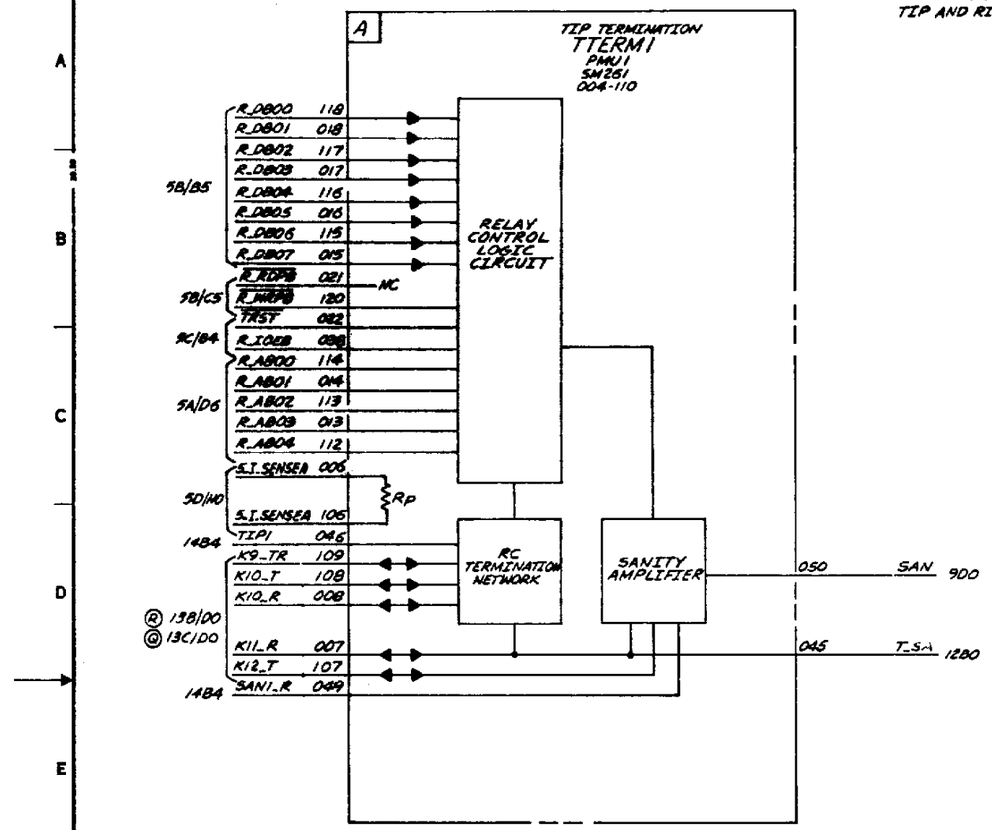

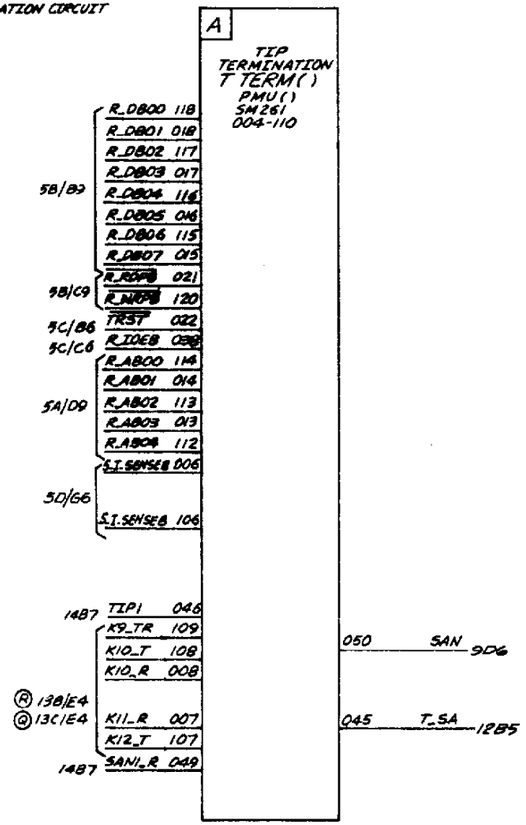

POWER DATA

CP	EQPT LOC	A_ GRD	D_ GRD				
				PMU0	+5.1A	+12	-12
				PMU1	+5.1B	+12	-12
				PMU2	+5.1B	+12	-12
SM261	004-110	003 004 005 051 052 053	000 001 002 054 055 056		TERM. 100 101 102 154 155 156	TERM. 123 124	TERM. 132 133

SEE PROPRIETARY NOTICE ON COVER PAGE

DIRECTLY CONNECTED TEST UNIT CIRCUIT

DWG SIZE 6S

ISSUE 13AC

AT&T BELL LABORATORIES

SD -2P077-01

SHEET 313A

P/O FS 13

TIP AND RING TERMINATION CIRCUIT

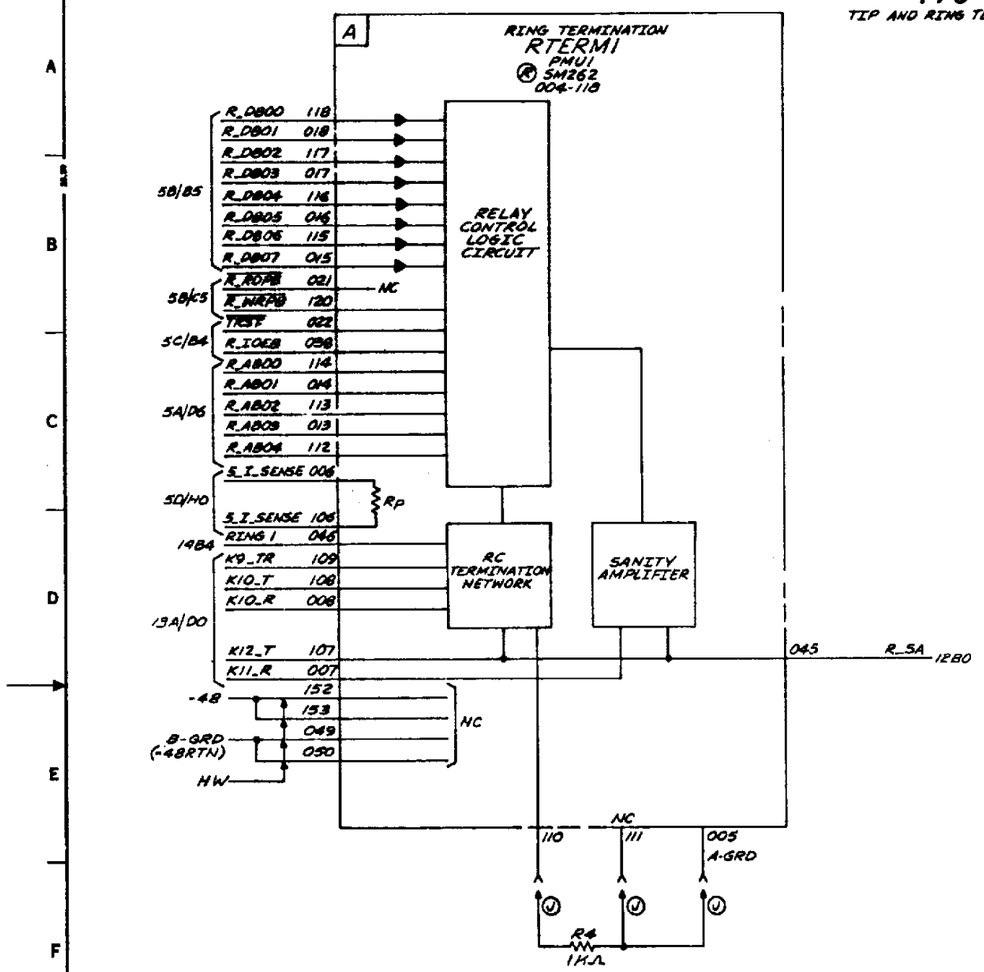

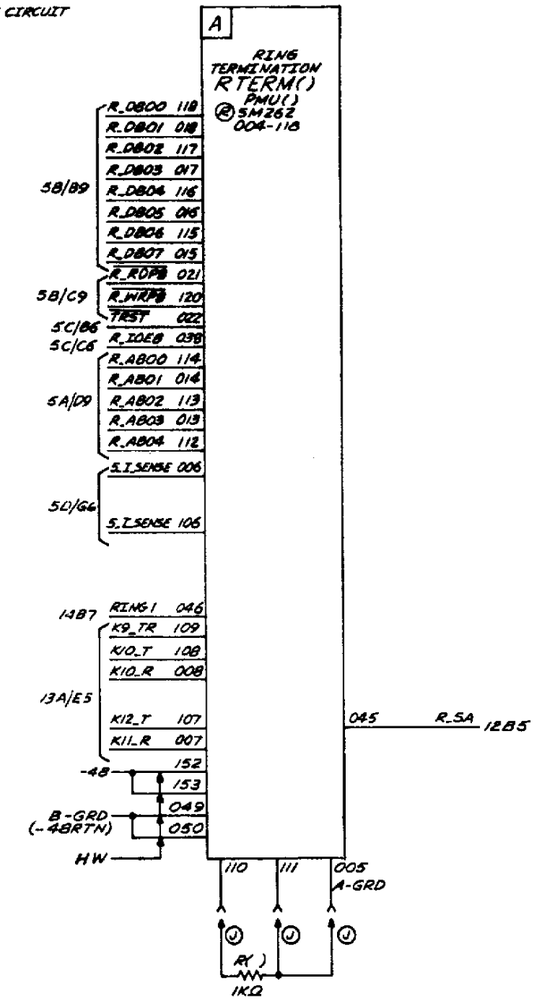

POWER DATA

CP	EQPT LOC	A_ GRD	D_ GRD						
				PMU0	+5.1A	+12	-12	B-GRD	-48
				PMU1	+5.1A	+12	-12		
				PMU2	+5.1A	+12	-12		
R SM262	004-118	003 004 005 051 052 053	000 001 002 054 055 056		TERM. 100 101 102 154 155 156	TERM. 123 124	TERM. 132 133	049 050	152 153

SEE PROPRIETARY NOTICE ON COVER PAGE

DIRECTLY CONNECTED TEST UNIT CIRCUIT

DWG SIZE 63

ISSUE 13AC

AT&T BELL LABORATORIES

SD -2P077-01

SHEET B138

P/O FS 13

TIP AND RING TERMINATION CIRCUIT

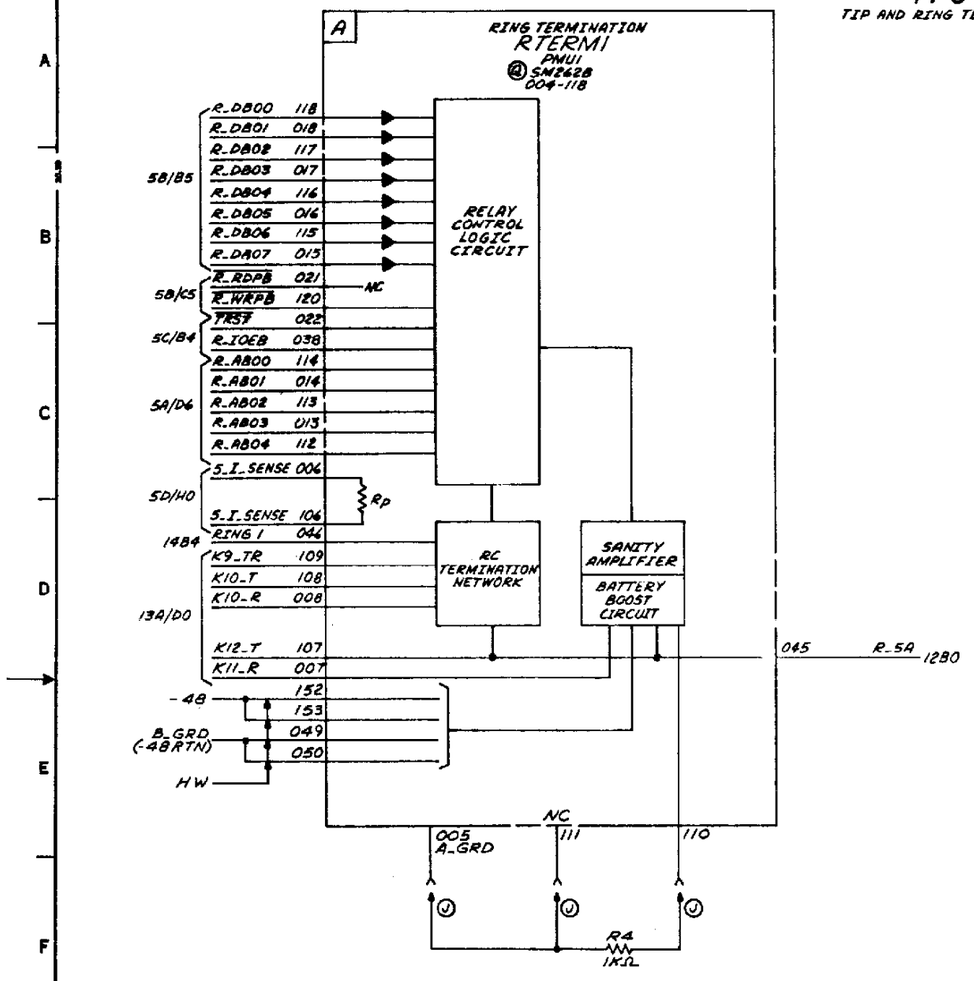

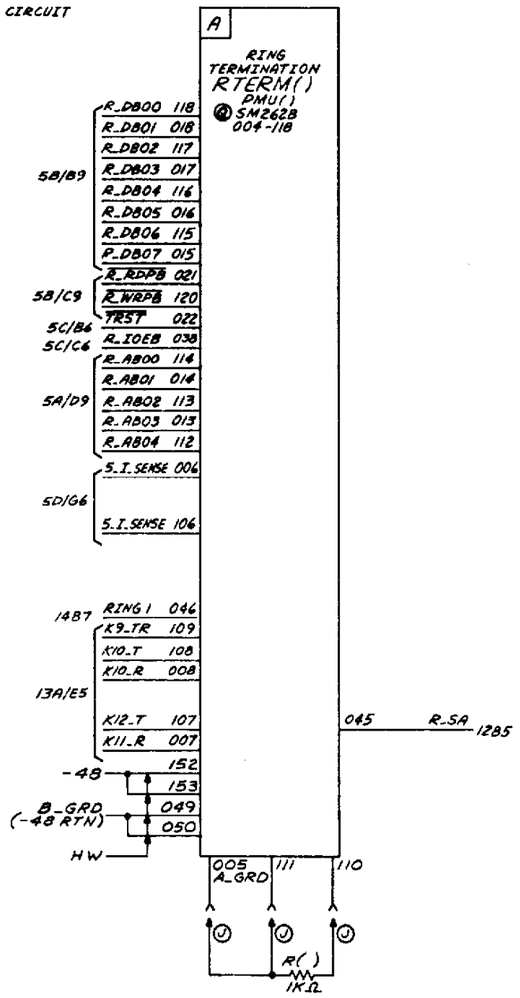

POWER DATA

CP	EQPT LOC	A-GRD	D-GRD	PMU0	+5.1A	+12	-12	B-GRD	-48
				PMU1	+5.1B	+12	-12		
				PMU2	+5.1B	+12	-12		
					TERM.	TERM.	TERM.		
① SM2628	004-118	003 004 005 051 052 053	000 001 002 054 055 056		100 101 102 154 155 156	123 124	132 133	049 050	152 153

SEE PROPRIETARY NOTICE ON COVER PAGE

DIRECTLY CONNECTED TEST UNIT CIRCUIT

DWG SIZE: 06

ISSUE: 13AC

AT&T BELL LABORATORIES

SD -2P077-01

SHEET: B13C

FS 14

SOURCE AMPLIFIER CIRCUIT

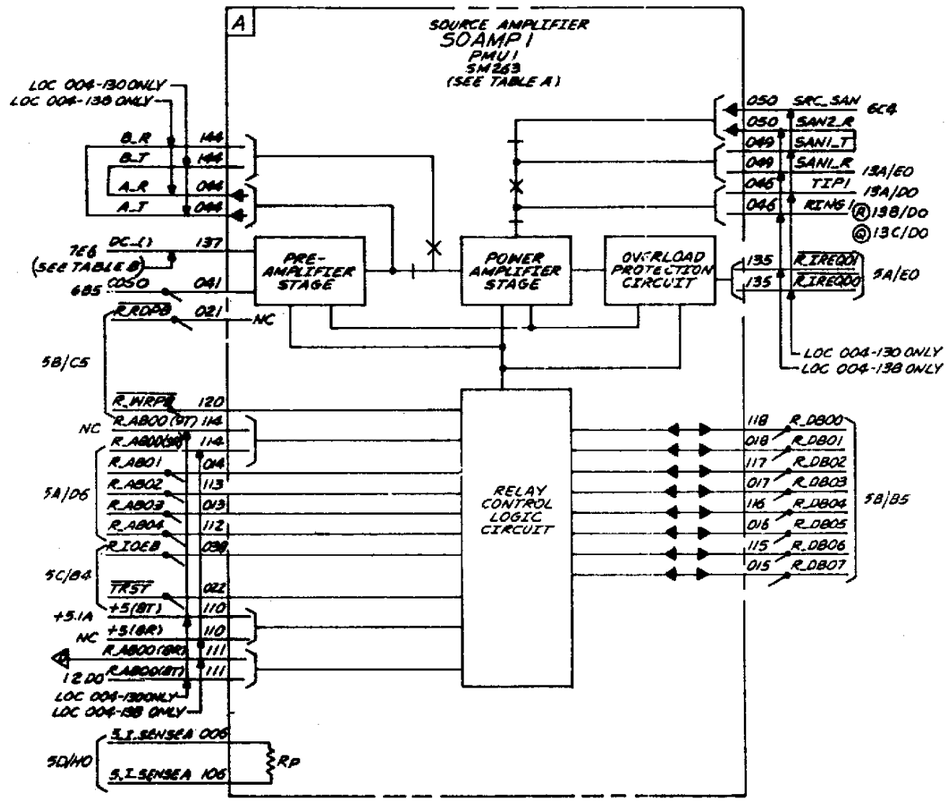

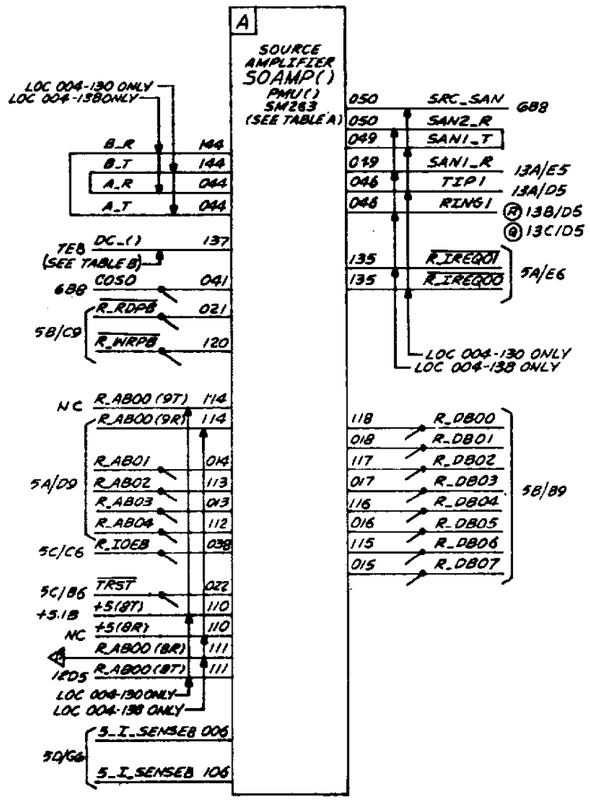

TABLE A

EQPT. LOC	
SM263	
SHELF	LOC
PMU0	004-130 004-138
PMU1	004-130 004-138
PMU2	004-130 004-138

TABLE B

SM263	
DESIG	LOC
DC_0	004-130
DC_1	004-138

POWER DATA

CP	EQPT LOC	A_ GRD	D_ GRD						
				PMU0	+5.1A	+12	-12	+150	-150
				PMU1	+5.1B	+12	-12	+150	-150
				PMU2	+5.1B	+12	-12	+150	-150
					TERM.	TERM.	TERM.	TERM.	TERM.
SM263	004-130 004-138	003 004 005 051 052 053	000 001 002 054 055 056		100 101 102 154 155 156	123 124	132 133	104 105	151 152

SEE PROPRIETARY NOTICE ON COVER PAGE

DIRECTLY CONNECTED TEST UNIT CIRCUIT

DWG SIZE: 6S

ISSUE: 13AC

AT&T BELL LABORATORIES

SD -2P077-01

SHEET: 814

FS 15
CORE ACCESS NETWORK CIRCUIT

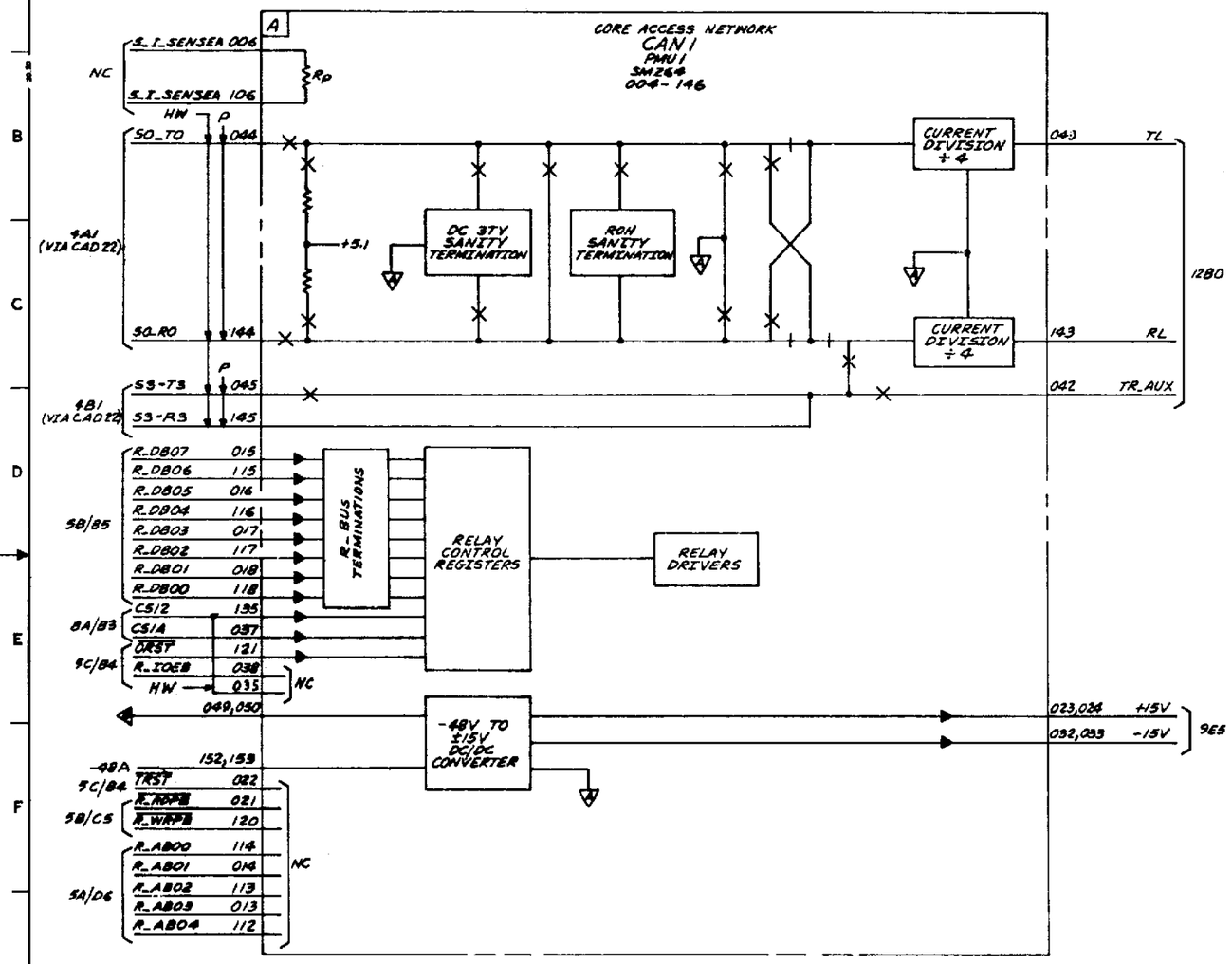

TABLE A

SM264	
DESIG	SHELF
S1_T1 S1_R1	PMU1
S2_T2 S2_R2	PMU2

POWER DATA

CP	EQPT LOC	A_ GRD	D_ GRD					
				PMU0	+5.1A	+12	-12	-48(A)
				PMU1	+5.1B	+12	-12	-48(B)
				PMU2	+5.1B	+12	-12	-48(C)
SM264	004-146	003 004 005 051 052 053	000 001 002 054 055 056		TERM. 100 101 102 154 155 156	TERM. 123 124	TERM. 132 133	TERM. 152 153

SEE PROPRIETARY NOTICE ON COVER PAGE

DIRECTLY CONNECTED TEST UNIT CIRCUIT

DWG SIZE 6S

ISSUE 13AC

AT&T BELL LABORATORIES

SD- -2P077-01

SHEET 815

PART OF FS16
PORT UNIT CIRCUIT

PORT AUXILIARY UNIT

PORT PMUD (A&M ONLY) SM248 (K) SM248B (J)
(SEE TABLE A)

NC SLV_DIAG( ) 111

HW, PMUD LOC 004-178 ONLY

(SEE TABLE C)

RMT( )3 049
RMR( )3 149
RMT( )2 048
RMR( )2 148
RMT( )1 047
RMR( )1 147
RMT( )0 046
RMR( )0 146

TO FS17 (VIA CAD 25)

NC

(SEE TABLE C)

HW, (SEE NOTE 201) (SEE TABLE B)
HW, LOC 004-178 ONLY (SEE NOTE 201)

3D/D7 (VIA CAD 19) PTE( ) (004-181,140 *139) 039
D_RDB (004-181,120) 020
2B/C6 (VIA CAD 19) D_RDB 020
D_WRB (004-181,119) 119
D_WRB 119
D_AB00 (004-181,114) 114
D_AB00 114
D_AB01 (004-181,114) 014
(X) 2A/C8 (VIA CAD 19) D_AB01 014
D_AB02 (004-181,113) 113
D_AB02 113
D_AB03 (004-181,113) 013
D_AB03 013
D_AB04 (004-181,112) 112
D_AB04 112
D_AB05 (004-181,112) 012
D_AB05 012
D_DB00 (004-181,118) 118
D_DB00 118
D_DB01 (004-181,118) 018
2B/A6 (VIA CAD 19) D_DB01 018
D_DB02 (004-181,117) 117
D_DB02 117
D_DB04 (004-181,116) 116
D_DB04 116
D_DB06 (004-181,115) 115
D_DB06 115
5A/C0 D_OMRST 122
D_OMRST 122

NC

HW, LOC 004-154 ONLY

LOC 004-154
LOC 004-162
LOC 004-170
LOC 004-178

PORT DECODING

5I/H0 S_I_SENSE A 006
S_I_SENSE A 106

Rp

* THE PIN NUMBER FOLLOWING THE ASTERISK IS USED ON LOC 004-178 ONLY.

B

+5.1
+5.1
+5.1

LONG TERM TONE APPLIQUE
DISCHARGE CIRCUIT
POSITIVE VOLTAGE DETECTOR
NEGATIVE VOLTAGE DETECTOR
DISCHARGE CIRCUIT
REFERENCE SOURCE
COMPARATOR
GROUND & SHORT DETECTOR

B

P, (SEE TABLE A)
044 Y( )_T( )
144 Y( )_R( )
4B6 (VIA CAD 22)

(X) P, LOC 004-178 ONLY
LTT0
LTT1
2A/F8 (VIA CAD 19)
045 LTT0
145 LTT1
NC

LOC 004-154
LOC 004-162
LOC 004-170
LOC 004-178

HW, (SEE NOTE 201) (SEE TABLE B)
037 (004-181,137,*138) HPI( ) 3C/G0 (VIA CAD 19)

HW, LOC 004-178 ONLY (SEE NOTE 201)
(004-181,136) D_IREQ01 2A/E1 (VIA CAD 19)
(X) 036 D_IREQ01 NC

LOC 004-154, LOC 004-162, LOC 004-170, LOC 004-178
011 HAZ_SLV( ) NC

COPYRIGHT © 1988 AT&T
ALL RIGHTS RESERVED

DIRECTLY CONNECTED TEST UNIT
CIRCUIT

DWG SIZE 65
ISSUE 14A

AT&T BELL LABORATORIES
SD -2P077-01
SHEET B16A

K 7661 (6-77) PRINTED IN U.S.A.

PART OF FS 16

PORT UNIT CIRCUIT

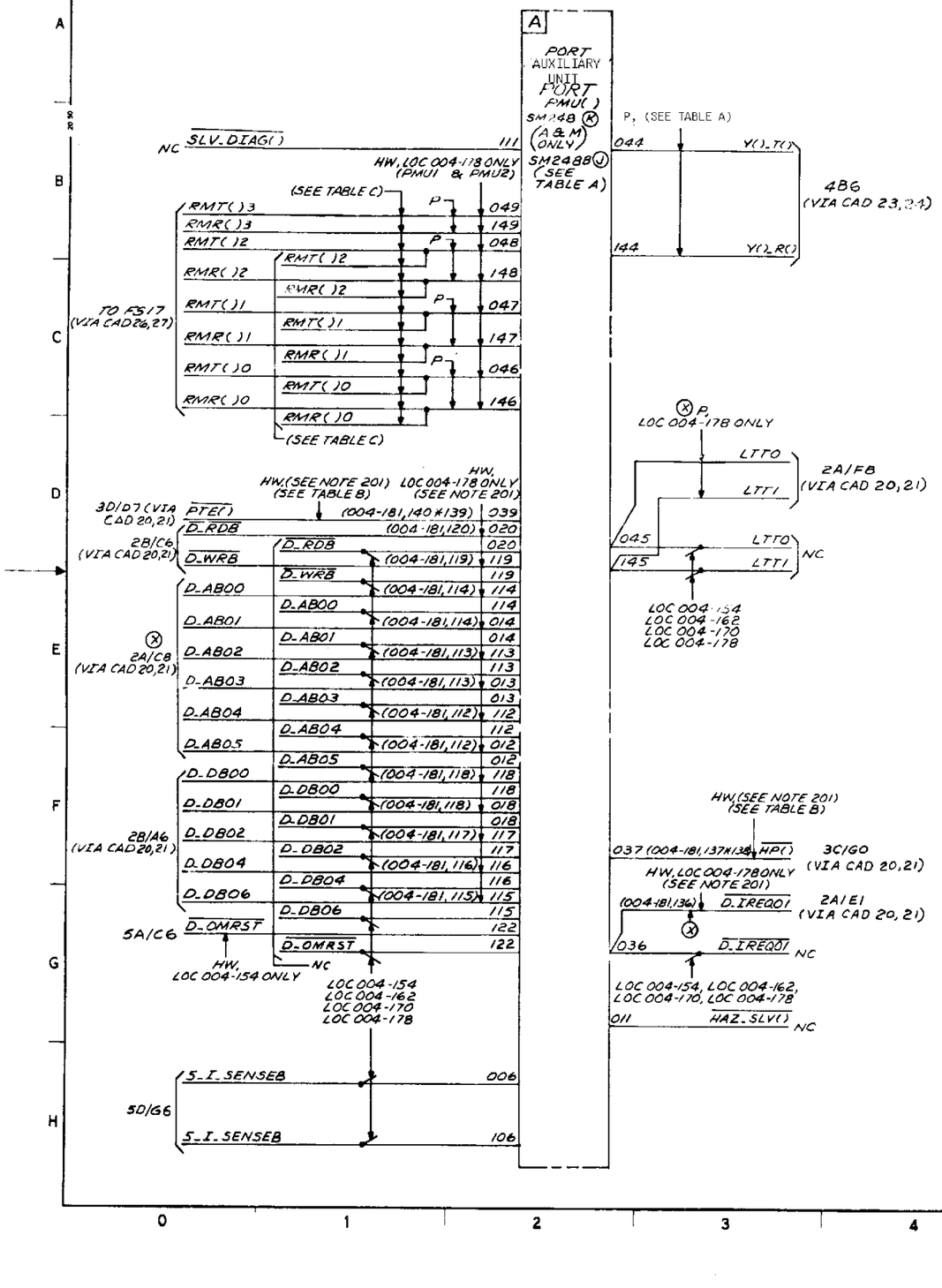

TABLE A

PORT UNITS	DESIG	EQPT LOC	PMU UNIT
3	Y3_T3	004-154	PMU0
	Y3_R3		
1	Y1_T1	004-162	
	Y1_R1		
2	Y2_T2	004-170	
	Y2_R2		
3	Y3_T3	004-178	
	Y3_R3		
0	Y0_T4	004-154	PMU1
	Y0_R4		
1	Y1_T5	004-162	
	Y1_R5		
2	Y2_T6	004-170	
	Y2_R6		
3	Y3_T7	004-178	
	Y3_R7		
0	Y0_T8	004-154	PMU2
	Y0_R8		
1	Y1_T9	004-162	
	Y1_R9		
2	Y2_T10	004-170	
	Y2_R10		
3	Y3_T11	004-178	
	Y3_R11		

POWER DATA

CP	EQPT LOC	PMU0			+5.1A	+12	-12	-48(A)	+70
		PMU1			+5.1B	+12	-12	-48(B)	+70
		PMU2			+5.1C	+12	-12	-48(C)	+70
		A_GRD	B_GRD	C_GRD	TERM	TERM	TERM	TERM	TERM
SM248	004-154	003 004 005 051 052 053	050 150	000 001 002 054 055 056	100 101 102 154 155 156	123 124	132 133	151 152	104 105
	004-162	003 004 005 051 052 053	050 150	000 001 002 054 055 056	100 101 102 154 155 156	123 124	132 133	151 152	104 105
	004-170	003 004 005 051 052 053	050 150	000 001 002 054 055 056	100 101 102 154 155 156	123 124	132 133	151 152	104 105
	004-178	003 004 005 051 052 053	050 150	000 001 002 054 055 056	100 101 102 154 155 156	123 124	132 133	151 152	104 105

TABLE B

PMU UNIT	DESIG	EQPT LOC
PMU0	RPD0 PTE00	004-154
	RPD1 PTE01	004-162
	RPD2 PTE02	004-170
	RPD3 PTE03	004-178
PMU1	RPT0 PTE10	004-154
	RPT1 PTE11	004-162
	RPT2 PTE12	004-170
	RPT3 PTE13	004-178
PMU2	RPT0 PTE20	004-154
	RPT1 PTE21	004-162
	RPT2 PTE22	004-170
	RPT3 PTE23	004-178

TABLE C

PMU UNIT	DESIG	EQUIPMENT LOCATION FROM	TO
PMU0	RMT00	004-178, 046	004-154, 049
	RMR00	004-178, 146	004-154, 149
	RMT01	004-178, 047	004-162, 049
	RMR01	004-178, 147	004-162, 149
	RMT02	004-178, 048	004-170, 049
	RMR02	004-178, 148	004-170, 149
	RMT03	004-178, 049	-
	RMR03	004-178, 149	-
PMU1	RMT10	004-178, 046	004-154, 049
	RMR10	004-178, 146	004-154, 149
	RMT11	004-178, 047	004-162, 049
	RMR11	004-178, 147	004-162, 149
	RMT12	004-178, 048	004-170, 049
	RMR12	004-178, 148	004-170, 149
	RMT13	004-178, 049	-
	RMR13	004-178, 149	-
PMU2	RMT20	004-178, 046	004-154, 049
	RMR20	004-178, 146	004-154, 149
	RMT21	004-178, 047	004-162, 049
	RMR21	004-178, 147	004-162, 149
	RMT22	004-178, 048	004-170, 049
	RMR22	004-178, 148	004-170, 149
	RMT23	004-178, 049	-
	RMR23	004-178, 149	-

COPYRIGHT © 1988 AT&T
ALL RIGHTS RESERVED

DIRECTLY CONNECTED TEST UNIT CIRCUIT

DWG SIZE: 6S | ISSUE: 14A

AT&T BELL LABORATORIES | SD -2P077-01 | SHEET: 8168

FS 17

CPS982LM DCTU BACKPLANE RESISTOR CIRCUIT MODULE (1043B9059) (SEE SHEET NOTE 2)

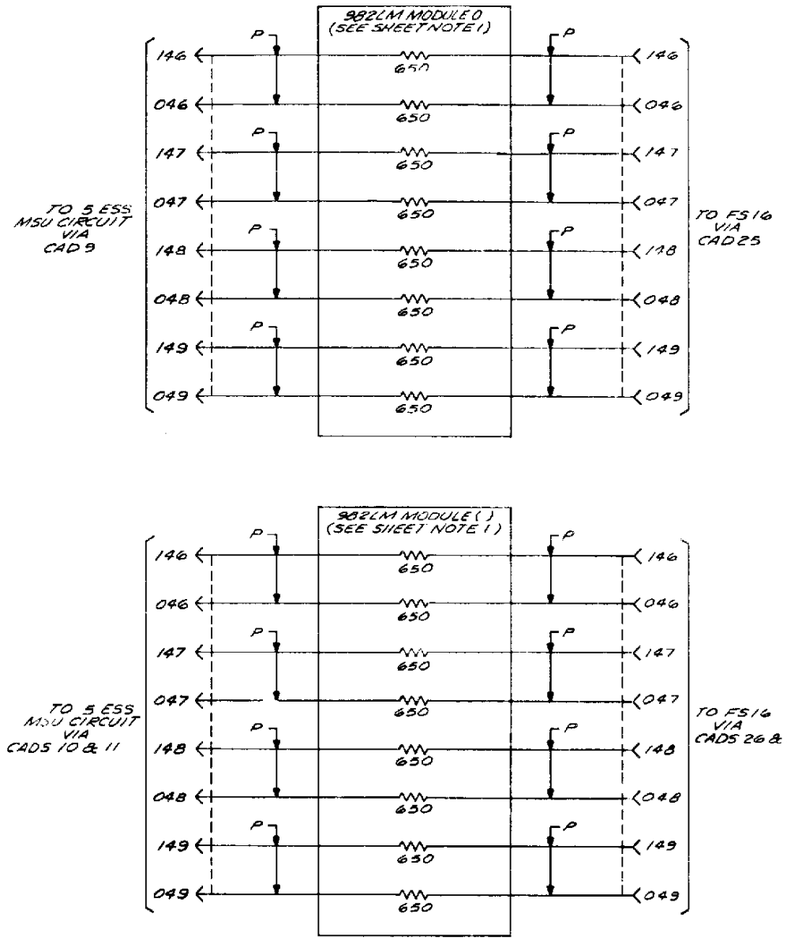

SHEET NOTES :

1. THE 982LM RESISTOR MODULE PLUGS INTO THE BACKPLANE PINS.
2. THE AT&T-T LEXINGTON ROAD FACTORY SHIPS DCTU'S WITHOUT THE 982LM BACKPLANE CIRCUIT MODULE. THESE MODULES ARE INSTALLED ON EACH DCTU'S BACKPLANE AT THE OKLAHOMA CITY WORKS. THE OKLAHOMA CITY WORKS PROCURES THESE MODULES FROM THE KANSAS CITY WORKS.

COPYRIGHT © 1968 AT&T
ALL RIGHTS RESERVED

DIRECTLY CONNECTED TEST UNIT CIRCUIT

DWG SIZE	ISSUE
8S	14A

AT&T BELL LABORATORIES | SD-2P077-01 | SHEET B17

APP FIG. 1

(J1P023AM: LIST 1)

PACK, CIRCUIT

OPTION	DESIG	EQPT LOC	FS LOC	CLEI CODE	CODE	STOP CODE
M	+5.1A	U04-042	1A2	PWPQ54CA	495FB	LB
N	+5.1A	004-042	1A2	PWPQ21A	495A	LB
M	+12	004-050	1D2	PWPQ53YA	494MA	LA
N	-12	004-050	1D2	PWPQ2QE	494E	LA
	+70,+150	004 074	1C8	PWPQ21D	495D	LE
M	-12	CL4-058	1A8	PWPQ53YA	494MA	LA
N	-12	004-058	1A8	PWPQ2QE	494E	LA
	-150	004-090	1E8	PWPQ21D	495D	LE

APP FIG. 2

(J1P023AM: LIST 1)

CONTROL SHELF

OPTION	DESIG	LOC	CODE
	BACKPLANE WIRING PER FS1-FS4	-	ED-2P383-30

APP FIG. 3

(J1P023AM: LIST 1, 2, 3)

PRECISION MEASUREMENT UNIT SELF

OPTION	DESIG	LOC	CODE
	BACKPLANE WIRING PER FS5-FS16	-	ED-2P384-30
	982LM RESISTOR MODULE	17A4	104385059

APP FIG. 4

(J1P023AM: LIST 1)

PACK, CIRCUIT

OPTION	DESIG	EQPT LOC	FS LOC	CLEI CODE	CODE	STOP CODE
	DCTUCTL	004-010	2A/A4,2B/A3	LMPQ15A	SN422	AF
J	PICB INTER	004-018	3C/B5,3D/A5	LMMQ04FAXX	MC2P004A3B (TN629B)	AH
K	PICB INTER	004-018	3C/B5,3D/A5	LMMQ048 (A&M ONLY)	MC2P004A1B (TN629B)	AH
X	PICB INTER	004-018	3A/B6,3B/B5	LMMQ04A	MC2P004A1 (TN629)	AH
Y	PICB INTER	004-018	3C/B5,3D/A5	LMMQ04B	MC2P004A1B (TN629B)	AH
	SWU1	004-154 004-162 004-170	4A4	LMPQQ5CAXX LMPQQ5CAXX LMPQQ5CAXX	SN423 SN423 SN423	AG

APP FIG. 5

(J1P023AM: LIST 1)

PACK, CIRCUIT

OPTION	DESIG	EQPT LOC	FS LOC	CLEI CODE	CODE	STOP CODE
	CAN1	004-146	15A2	LMPQ23Y	SM264	
J	DCONV1	004-078	9A3	LMPQ18A	SM257B	
K	DCONV1	004-078	9A3	LMPQ03R	SM257 (A&M ONLY)	
S	FLTR1	004-050	11B2	LMPQ13T	SM259B	
T	FLTR1	004-050	11B2	LMPQ13T	SM259	
	ISENS1	004-042	12B2	LMPQ13U	SM260	
	(2) LRM1	004-094, 004-102	7A3	LMPQ03H	SM254	
	MCTL1-1	004-030	8A/A2	LMPQ03J	SM255	
	MCTL2-1	004-034	8B/A2	LMPQ03K	SM256	
	PMUCTL1	004-010	5A/A3,5B/A2	LMMQ08BA	MC2P002C1 (SM250)	
J	PMUINT1	004-018	5C/A2	LMMQ20FAXX	MC2P010B3 (SM251)	
K	PMUINT1	004-018	5C/A2	LMMQ20CAXX	MC2P010B1 (SM251)	
J	PMUMEM1	004-026	5D/A2	LMMQ21CAXX	MC2P010A3 (SM274)	
K	PMUMEM1	004-026	5D/A2	LMMQ21A (A&M ONLY)	MC2P010A1 (SM274)	
J	(4) PORT1	004-154, 004-162, 004-170, 004-178	16A/A5	LMPQ17B LMPQ03B	SM248B SM248 (A&M ONLY)	
	PSG1	004-086	6A2	LMPQ03G	SM253	
Q	RTERM1	004-118	13C/A5	LMPQ04R	SM262B	
R	RTERM1	004-118	13B/A2	LMPQ03W	SM262	
V	(2) SIG CON1	004-058, 004-070	10A2	LMPQ13S	SM258B	
W	(2) SIG CON1	004-130, 004-138	14A2	LMPQ24X	SM263	
	TTERM1	004-110	13A/B2	LMPQ03V	SM261	

RESISTOR

OPTION	DESIG	LOC	CODE
	R1		KS-20616,L1A, 348Ω
J	R4	13B/F2, 13C/F2	KS-20616,L1A, 1KΩ

APP FIG. 6

(J1P023AM: LIST 2, 3)

PACK, CIRCUIT

OPTION	DESIG	EQPT LOC	FS LOC	CLEI CODE	CODE	STOP CODE
	CAN( )	004-146	15A7	LMPQ13Y	SM264	
J	DCONV( )	004-078	9A7	LMPQ18A	SM257B	
K	DCONV( )	004-078	9A7	LMPQ03R	SM257 (A&M ONLY)	
S	FLTR( )	004-050	11B5	LMPQ13T	SM259B	
T	FLTR( )	004-050	11B5	LMPQ13T	SM259	
	ISENS( )	004-042	12B6	LMPQ03U	SM260	
	(2) LRM( )	004-094 004 102	7C7	LMPQ03H	SM254	
	MCTL1( )	004-030	8A/A5	LMPQ03J	SM255	
	MCTL2( )	004-034	8B/A5	LMPQ03K	SM256	
	PMUCTL( )	004-010	5A/A7,5B/A7	LMMQ08BA	MC2P002C1 (SM250)	
J	PMUINT( )	004-018	5C/A5	LMMQ20FAXX	MC2P010B3 (SM251)	
K	PMUINT( )	004-018	5C/A5	LMMQ20CAXX	MC2P010B1 (SM251)	
J	PMUMEM( )	004-026	5D/A7	LMMQ21CAXX	MC2P010A3 (SM274)	
K	PMUMEM( )	004-026	5D/A7	LMMQ21A	MC2P01CA1 (SM274)	
J	(4) PORT( )	004-154, 004-162, 004-170, 004 178	16B/A2	LMPQ17B LMPQ03B	SM248B SM248 (A & M ONLY)	

APP FIG. 6 (CONT)

(J1P023AM: LIST 2, 3)

PACK, CIRCUIT (CONT)

OPTION	DESIG	EQPT LOC	FS LOC	CLEI CODE	CODE	STOP CODE
	PSG( )	004-086	6B7	LMPQ03G	SM253	
Q	RTERM( )	004-118	13C/A5	LMPQ04R	SM262B	
R	RTERM( )	004-118	13B/A5	LMPQ03W	SM262	
V	(2) SIG CON( )	004-056 007-070	10C7	LMPQ13S	SM258B	
W	(2) SIG CON( )	004-058 007-070	10C7	LMPQ13S	SM258	
	(2) SOAMP( )	004-130 004-138	14A6	LMPQ24X	SM263	
	TTERM( )	004-110	13A/A5	LMPQ03V	SM261	

RESISTOR

OPTION	DESIG	LOC	CODE
	R1)		KS-20616,L1A, 348Ω
J	R1)	13B/F5,13C/F5	KS-20616,L1A, 1KΩ
	R1		KS-20615,L1A, 348Ω

APP FIG. 7

(J1P023AM: LIST 2)

PACK, CIRCUIT

OPTION	DESIG	EQPT LOC	FS LOC	CLEI CODE	CODE	STOP CODE
	SWU2	004-162 004-154 004-170	4A4	LMPQ05CAXX LMPQ05CAXX LMPQ05CAXX	SN423 SN423 SN423	AG

APP FIG. 8

(J1P023AM: LIST 2)

PACK, CIRCUIT

OPTION	DESIG	EQPT LOC	FS LOC	CLEI CODE	CODE	STOP CODE
M	-5.1B	004-114	1E2	PWPQ54CA	495FB	LB
N	+5.1B	004-114	1E2	PWPQ22A	496A	LB

APP FIG. 9

(J1P023AM: LIST 3)

PACK, CIRCUIT

OPTION	DESIG	EQPT LOC	FS LOC	CLEI CODE	CODE	STOP CODE
	SWU3	004-170 004-162 004-154	4A4	LMPQ05CAXX LMPQ05CAXX LMPQ05CAXX	SN423 SN423 SN423	AG

COPYRIGHT © 1988 AT&T
ALL RIGHTS RESERVED

DIRECTLY CONNECTED TEST UNIT CIRCUIT

DWG SIZE: 8S | ISSUE: 15A

AT&T BELL LABORATORIES | SD -2P077-01 | SHEET: C1

STAR 1P001 PRINTED IN U.S.A.

CIRCUIT NOTES:

101.

DESIG	FUSE AMP	POTENTIAL	ONE PER
F1	5	-48V	CIRCUIT
F2	2	-48V	CIRCUIT
F3	2	-48V	CITCUIT
F4	5	-48V	CIRCUIT
F5	5	-48V	CIRCUIT
F6	5	-48V	CIRCUIT
F7	0.5	-48V	CIRCUIT
F8	0.5	-48V	CIRCUIT
F9	0.5	-48V	CIRCUIT
F1		GRD	CIRCUIT
F2		GRD	CIRCUIT
F3		GRD	CIRCUIT
F4		GRD	CIRCUIT
F5		GRD	CIRCUIT
F6		GRD	CIRCUIT
F7		GRD	CIRCUIT
F8		GRD	CIRCUIT
F9		GRD	CIRCUIT

BATTERY SYMBOL	VOLTAGE RANGE
-48	-43.2 to -52.8

EQUIPMENT NOTES:

201. SIGNAL LEADS REFERENCING THIS NOTE ARE PAIRED WITH INDIVIDUAL GROUND LEADS. THE TERMINAL NUMBER CLOSEST TO THE CIRCUIT PACK IS THE SIGNAL LEAD. THE GROUND LEAD IS CONNECTED TO THE TERMINAL NUMBER SHOWN IN PARENTHESES.

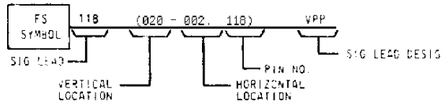

202. ON ALL SHEETS THE LOCATION OF THE APPARATUS IS AS SHOWN.

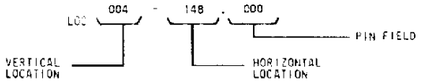

203. UNLESS OTHERWISE SPECIFIED, ALL WIRE SHALL BE 26 GAUGE. ALL 14, 16, 18, AND 22 GAUGE WIRE SHALL BE STRANDED.

204. ALL TIP AND RING LEADS SHALL BE PAIRED.

205. THE QUIET GROUND SYSTEM CONSISTS OF A NO. 16 GAUGE INSULATED WIRE CONNECTED BETWEEN THE DCTU (LOC 004-037) AND 5 ESS GROUND BAR.

206. D5 WIRING TO BE RUN USING TYPE BY, 26 GAUGE WITH ONE RIGHT ANGLE TURN. EACH RUN STARTING IN THE HORIZONTAL DIRECTION.

207. KEYING ARRANGEMENTS FOR THE CONTROL UNIT BACKPLANE (ED-2P370-30). THIS IS TO PREVENT POWER SUPPLIES AND CIRCUIT PACKS FROM BEING PLUGGED INTO THE WRONG POSITION.

CIRCUIT	EQL	BACKPLANE KEYCODE	FIVE KEY POSITIONS
495A	004-042	2B1LB	0-1-5-7-9
494E	004-050	2B1LD	0-1-5-8-9
494E	004-058	2B1LA	0-1-5-8-9
495D	004-074	2B1LE	0-1-5-8-9
495D	004-090	2B1LE	0-1-5-6-8
496A	004-114	2B1LB	0-1-5-7-9
SN422	004-010	2B1AF	4-5-6-7-8
MC2P004A3B	004-018	2B1AH	3-5-7-8-9
SN423	004-154	2B1AG	3-6-7-8-9
SN423	004-162	2B1AG	3-6-7-8-9
SN423	004-170	2B1AG	3-6-7-8-9

208. WIRING TO BE RUN BY AN INSTALLER IS SPECIFIED IN AT&T TECHNOLOGIES DRAWING T-2P077-31.

209. UNLESS OTHERWISE SPECIFIED, ALL STANDARD WIRE SHOULD BE CRIMPED TO TERMINALS (41898 FASTON TYPE0 AND THEN THE CONNECTION SOLDERED BEFORE MOUNTING TO "E" NUMBERED (221C TYPE) LUGS, (SEE CADS 1-7, 12-14).

COPYRIGHT © 1988 AT&T
ALL RIGHTS RESERVED

DIRECTLY CONNECTED TEST UNIT CIRCUIT

DWG SIZE 6S

ISSUE 15A

AT&T BELL LABORATORIES

SD -2P077-01

SHEET D1

EQUIPMENT NOTES (CONT):

206. UNLESS OTHERWISE SPECIFIED, ALL WIRES ARE 26 GA. DS. PATHS W1 THROUGH W6 (SEE BELOW) ARE REQUIRED TO PROVIDE SEPARATION OF NOISY LEADS AND QUIET LEADS. THE LEADS MARKED W1 THROUGH W6 ARE SHOWN IN THE FUNCTIONAL SCHEMATIC (B SHEETS) AND CADS (G SHEETS).

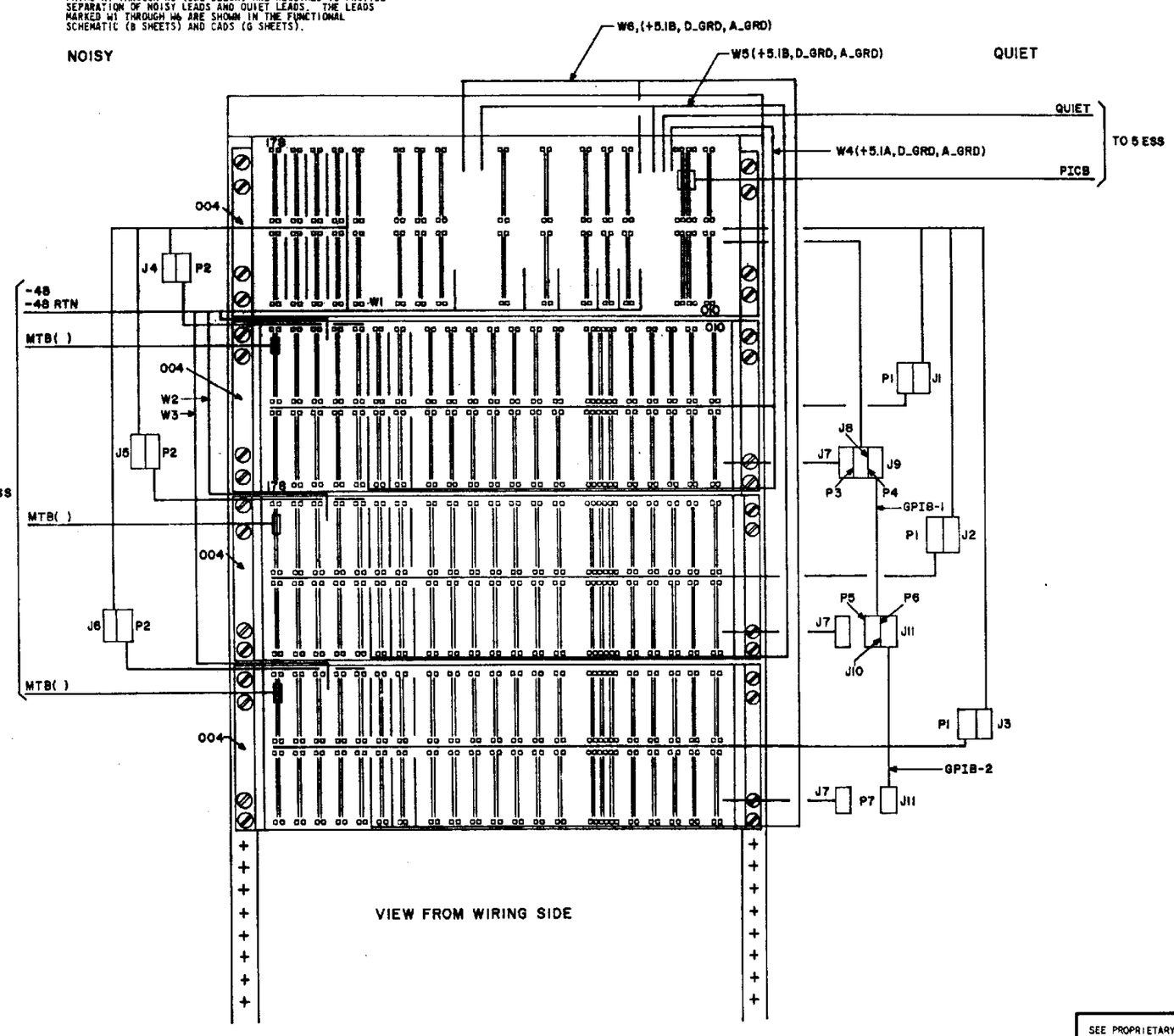

SEE PROPRIETARY NOTICE ON COVER PAGE

DIRECTLY CONNECTED TEST UNIT CIRCUIT

DWG SIZE A3

ISSUE 5B

AT&T BELL LABORATORIES

SD -2P077-01

SHEET D2

INFORMATION NOTES:

301. UNLESS OTHERWISE SPECIFIED:
RESISTANCE VALUES ARE IN OHMS.
CAPACITANCE VALUES ARE IN MICROFARADS.
VALUES PRECEDED BY THE SYMBOL + (PLUS) OR - (MINUS) ARE IN VOLTS.

302.

FEATURE OR OPTION	PROVIDE: APP FIU	PROVIDE: APP OR WRG	PROVIDE: QUANTITY
SYSTEM TO TEST 10,000 SUBSCRIBER LINES (4 PORTS, 1 PMU)	1, 2, 3, 4, 5		1 PER CKT
PMU1 & 4 PORTS TO TEST 40,000 ADDITIONAL	3, 6, 7, 8	Z	1 PER CKT
PMU2 & 4 PORTS TO TEST 50,000 ADDITIONAL LINES	3, 6, 9	Z	1 PER CKT
5 ESS WITH GENERIC 5E2 OR HIGHER		J	1 PER CKT
5 ESS WITH GENERICS PR OR TO 5E2		K	1 PER CKT

303.

RECORD OF FIGURES, WIRING AND APPARATUS CHANGES						
CHANGED ON ISS	IF JOB RECORDS DO NOT SPECIFY	THIS OPTION WAS FURN	SEE NOTE	USE IN CIRCUIT: STD	A&M	MD
4B	Y	X	304	Y	X	
5B	Q OR R	R	305	Q		R
6A	V OR W	W	308	V		W
6A	S OR T	T	308	S		T
8B	M OR N	N	306	M		N
13AC	J OR K	K	312	J	K	
				AVAIL		DA
15A			313			

304. TO PROVIDE THE DCTU FLOATING POINT CAPABILITY, PER 5 ESS REQUEST. IT WAS NECESSARY TO MAKE CHANGES ON MC2P004A1 (TN629). THESE CHANGES CREATED A NEW RELEASE OF THIS CIRCUIT PACK, MC2P004A1B (TN629B) WHIC IS THE STANDARD.

MC2P004A1 (TN629) WILL BE MANUFACTURE DISCONTINUED.

305. TO PROVIDE THE DCTU WITH A CIRCUIT PACK WHICH HAS AN INCREASED RESISTANCE RANGE WHICH DIAL TONE CAN BE DRAWN. IT WAS NECESSARY TO MAKE CHANGES ON SM262.

SM262B WILL BECOME-STD
SM262 WILL BECOME-MD

306. POWER UNITS 495A,496A,494E ARE BEING MANUFACTURED DISCONTINUED. THEY WILL BE REPLACED BY 495FB, 495FB, AND 494MA RESPECTIVELY WHICH WILL BECOME THE STANDARD.

INFORMATION NOTES (CONT):

307. TO PROVIDE THE DCTU WITH THE CAPACITY OF BEING MOUNTED IN A 5ESS 6 FOOT HIGH SINGLE BAY FRAME (ED-50184-70) IT WAS NECESSARY FOR AT&T BL-WH TO DESIGN A BRACKET (L5311169) FOR THE PMU SHELVES AT&T BL-IH DESIGNED THE MOUNTING BRACKET AND SUPPORT BAR FOR THE CONTROL SHELF.

308. TO PROVIDE THE DCTU WITH SOFTWARE CONTROLLED SATURATION DETECTION ON THE SIGCON CIRCUIT PACK, PER 5ESS REQUEST. IT WAS NECESSARY TO MAKE CHANGES ON SM258 AND SM259. SM258A AND SM259B WILL BECOME THE STANDARD AND SM258 AND SM259 WILL BECOME MANUFACTURE DISCONTINUED.

309. DCTU PHYSICAL ARRANGEMENTS (FRONT VIEW)

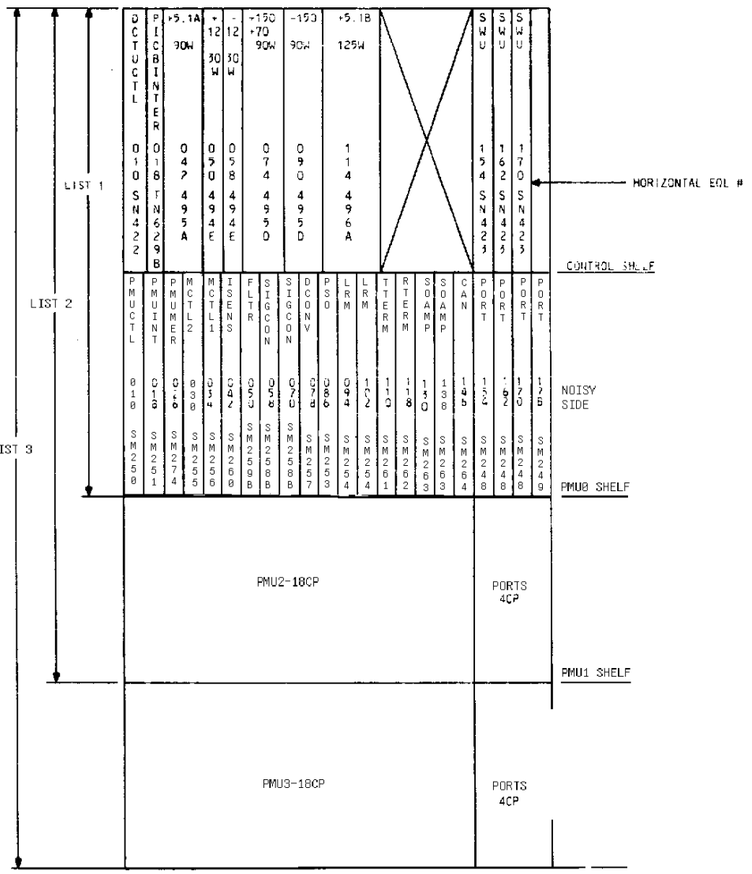

NOTES:
1. 5.1A IS FOR CONTROL AND PMU0 SHELVES.
2. 5.1B IS FOR PMU1 AND PMU2 SHELVES.

INFORMATION NOTES: (CONT)

310. TO PERMIT USE OF A SM262B IN A DCTV ADD 4W STRAPS FOR -48V AND B-3RD ON THE PMU SHELF BACKPLANE.

311. TO COMPLY WITH 5ESS STANDARDS ALL PMU NUMBERS WILL CHANGE FROM PMU1, PMU2, PMU3 TO PMU0, PMU1, PMU2. THIS CHANGE ONLY AFFECTS THE SD-2P077-01.

312. OPTION (J) PROVIDES THE PRODUCT CODES NECESSARY FOR IMLT2 TESTING, THIS FEATURE ALLOWS THE ARSB TO PERFORM MLT TESTING DIRECTLY OVER A DATA LINK USING AN INTEGRATED DCTU IN A 5 ESS OFFICE. OPTION (J) IS TO BE APPLIED ONLY TO DCTU'S CONNECTED TO 5 ESS SWITCHES THAT ARE RUNNING UNDER GENERIC 5E2(1) OR HIGHER SOFTWARE. THE SOFTWARE MUST BE INSTALLED BEFORE OPTION (J) IS APPLIED. OPTION (K) IS TO BE APPLIED IN ALL OTHER CASES AND SHALL BE RATED ARM ONLY.

313. PRIOR TO ISSUE 15A, COLUMNS HEADED "STD","MD",ETC.. CONVEYED APPLICATION INFORMATION. AT ISSUE 15A, COLUMNS HEADED "AVAIL" AND "DA" NOW INDICATE THE AVAILABILITY OF THE PRODUCT.

COPYRIGHT © 1988 AT&T
ALL RIGHTS RESERVED

DIRECTLY CONNECTED TEST UNIT CIRCUIT

DWG SIZE	ISSUE
6S	15A

AT&T BELL LABORATORIES	SD -2P077-01	SHEET D3

CAD 1
APP FIG. 1

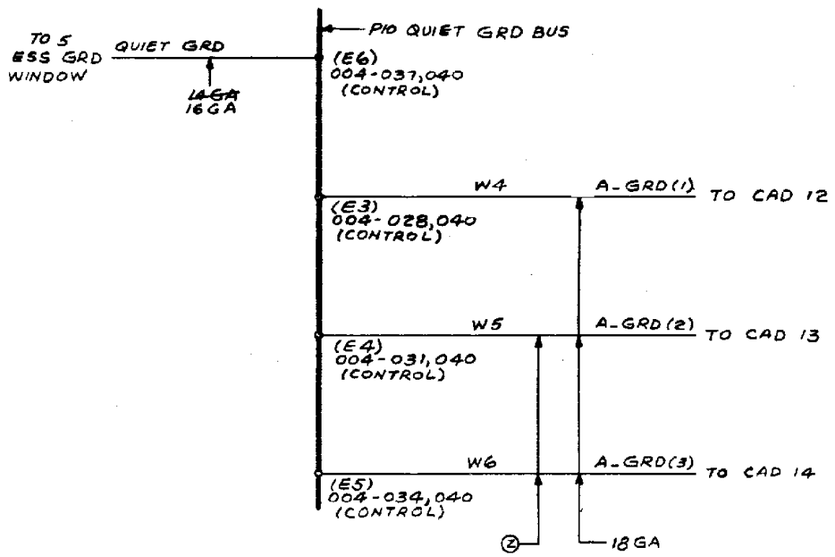

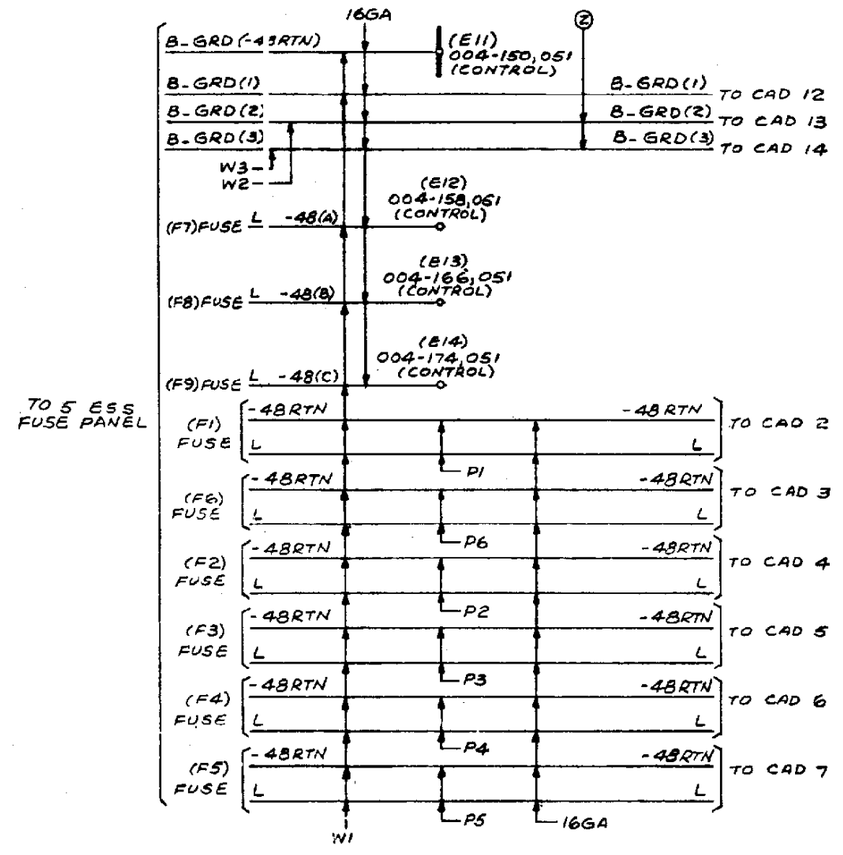

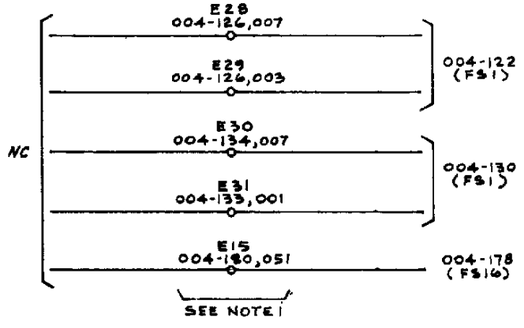

NOTES:

1. LUGS ARE NOT INSERTED IN BACKPLANE LOCATIONS, E NUMBERS ARE FOR REFERENCE ONLY.

SEE PROPRIETARY NOTICE ON COVER PAGE

DIRECTLY CONNECTED TEST UNIT CIRCUIT

DWG SIZE: 4S

ISSUE: 11B

AT&T BELL LABORATORIES

SD -2P077-01

SHEET: 61

CAD 2
APP FIG. 1

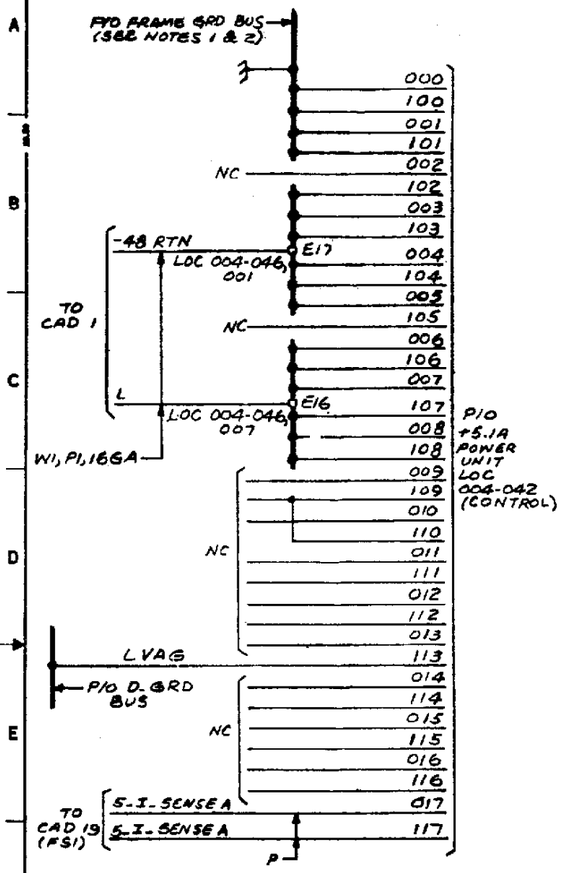

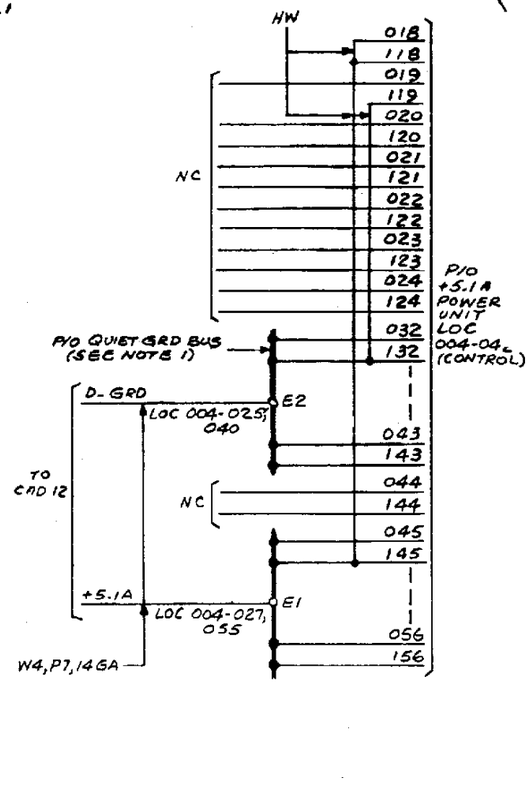

CAD 3
APP FIG. 8

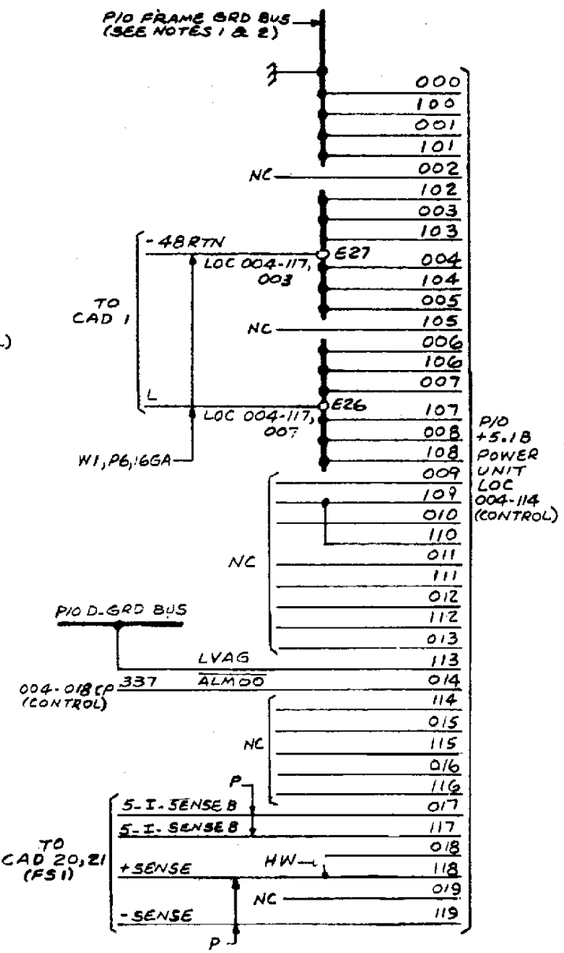

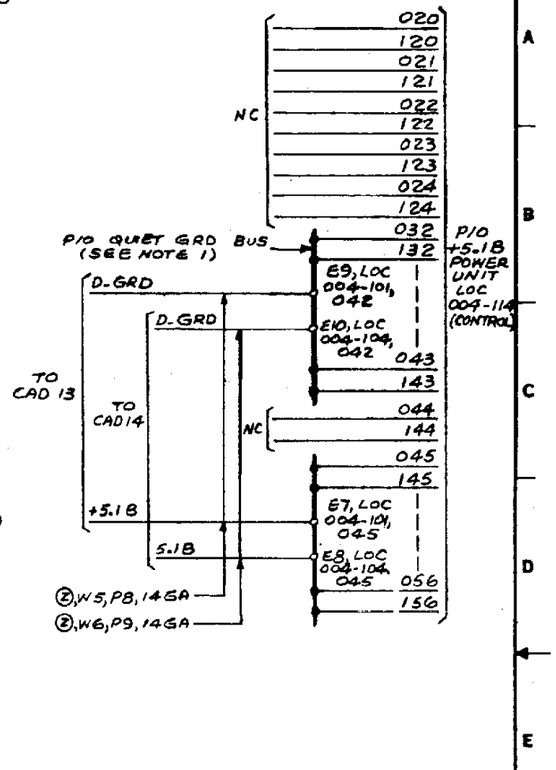

NOTES:

1. ALL BUS CONNECTIONS INDICATE PRINTED WIRING PATHS TO THEIR RESPECTIVE TERMINALS ON THE BACKPLANE.
2. THE FRAME GROUND BUS CONNECTION IS MECHANICALLY MADE WHEN THE BACKPLANE WIRING BOARD IS FASTENED BY THREE SCREWS TO THE MAIN FRAME.

SEE PROPRIETARY NOTICE ON COVER PAGE

DIRECTLY CONNECTED TEST UNIT CIRCUIT

DWG SIZE	ISSUE
A3	2A

AT&T BELL LABORATORIES	SD -2P077-01	SHEET G2

CAD 6
APP FIG. 1

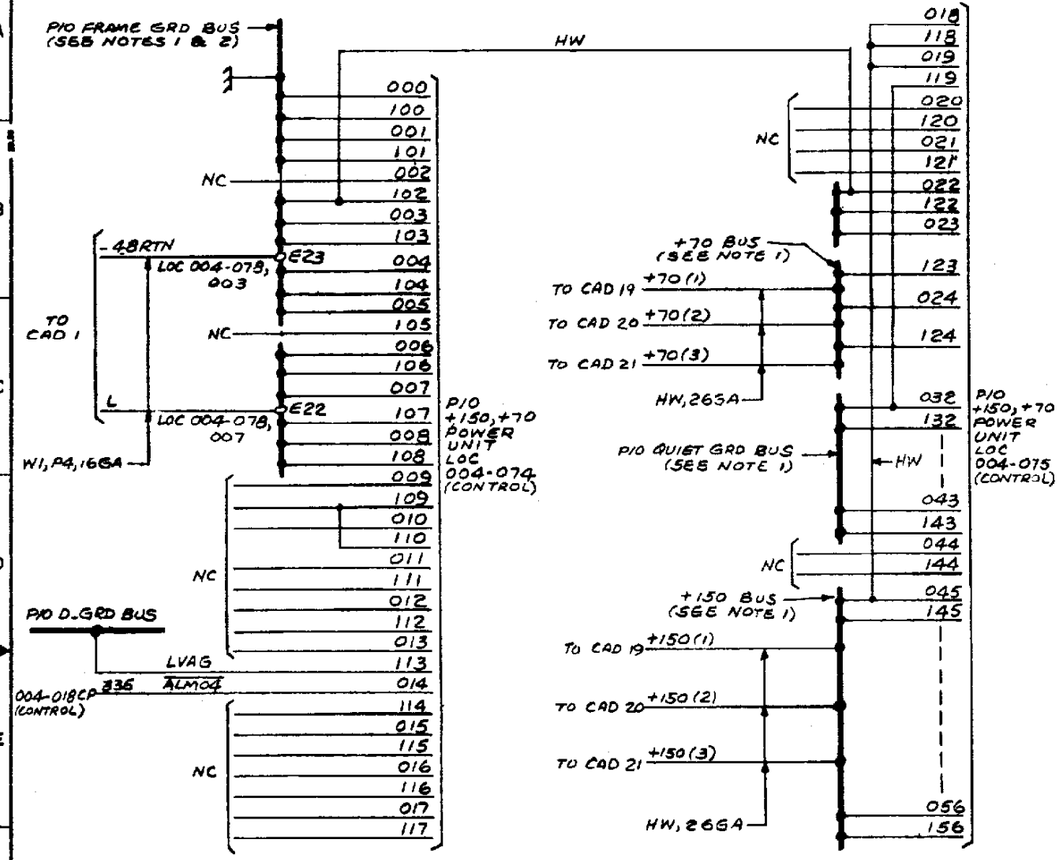

CAD 7
APP FIG. 1

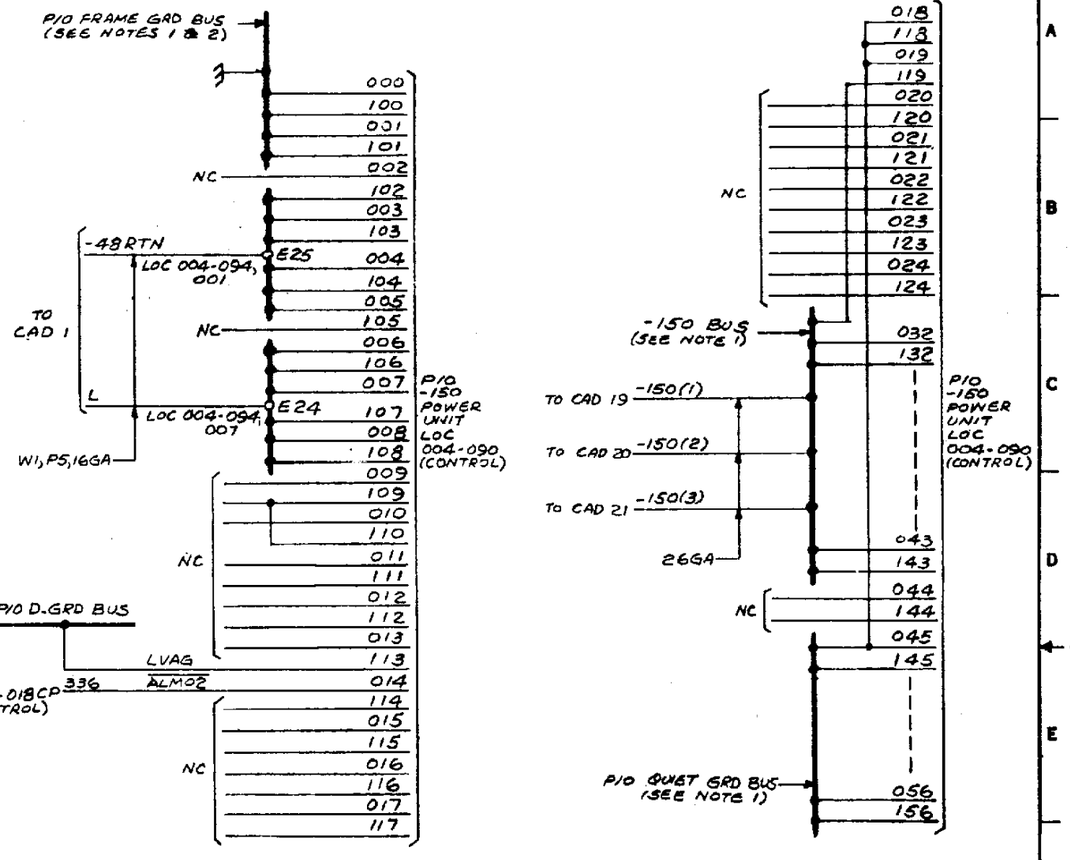

NOTES:

1. ALL BUS CONNECTIONS INDICATE PRINTED WIRING PATHS TO THEIR RESPECTIVE TERMINALS ON THE BACKPLANE.
2. THE FRAME GROUND BUS CONNECTION IS MECHANICALLY MADE WHEN THE BACKPLANE WIRING BOARD IS FASTENED BY THREE SCREWS TO THE MAIN FRAME.

SEE PROPRIETARY NOTICE ON COVER PAGE

DIRECTLY CONNECTED TEST UNIT CIRCUIT

DWG SIZE A3 | ISSUE 1

AT&T BELL LABORATORIES | SD -2P077-01 | SHEET G4

CAD 6
APP FIG. 1

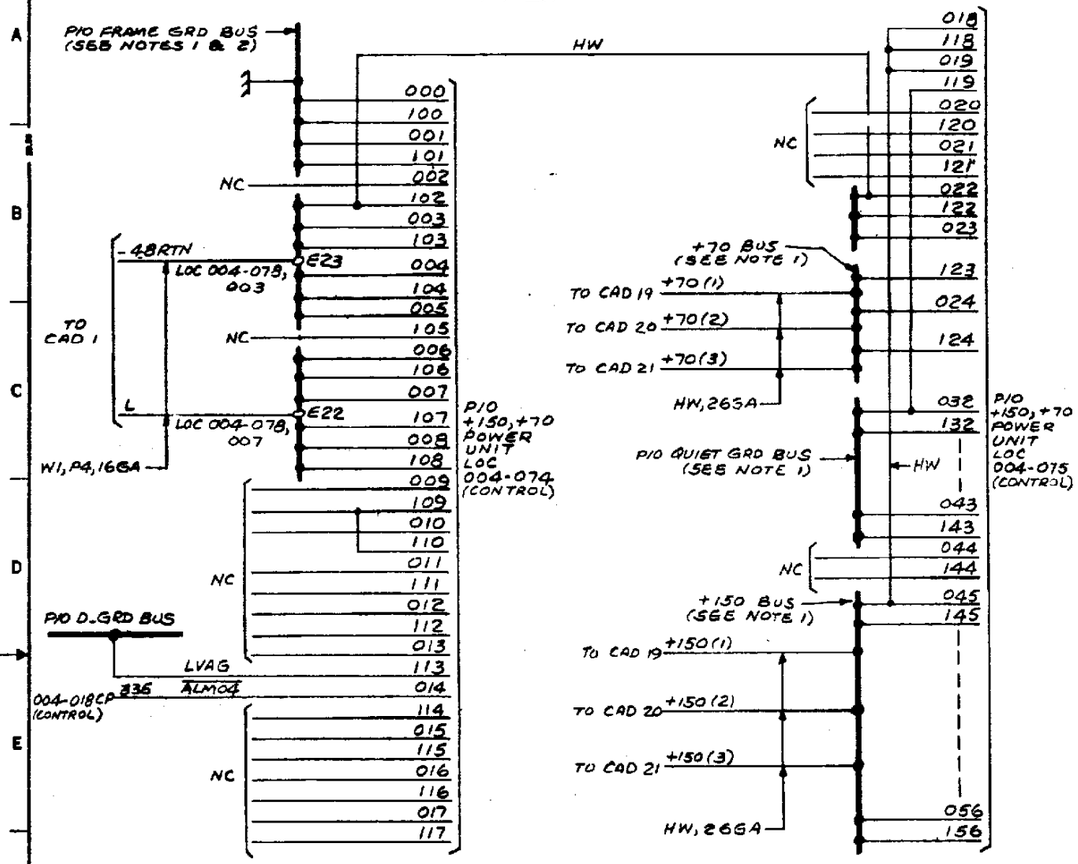

CAD 7
APP FIG. 1

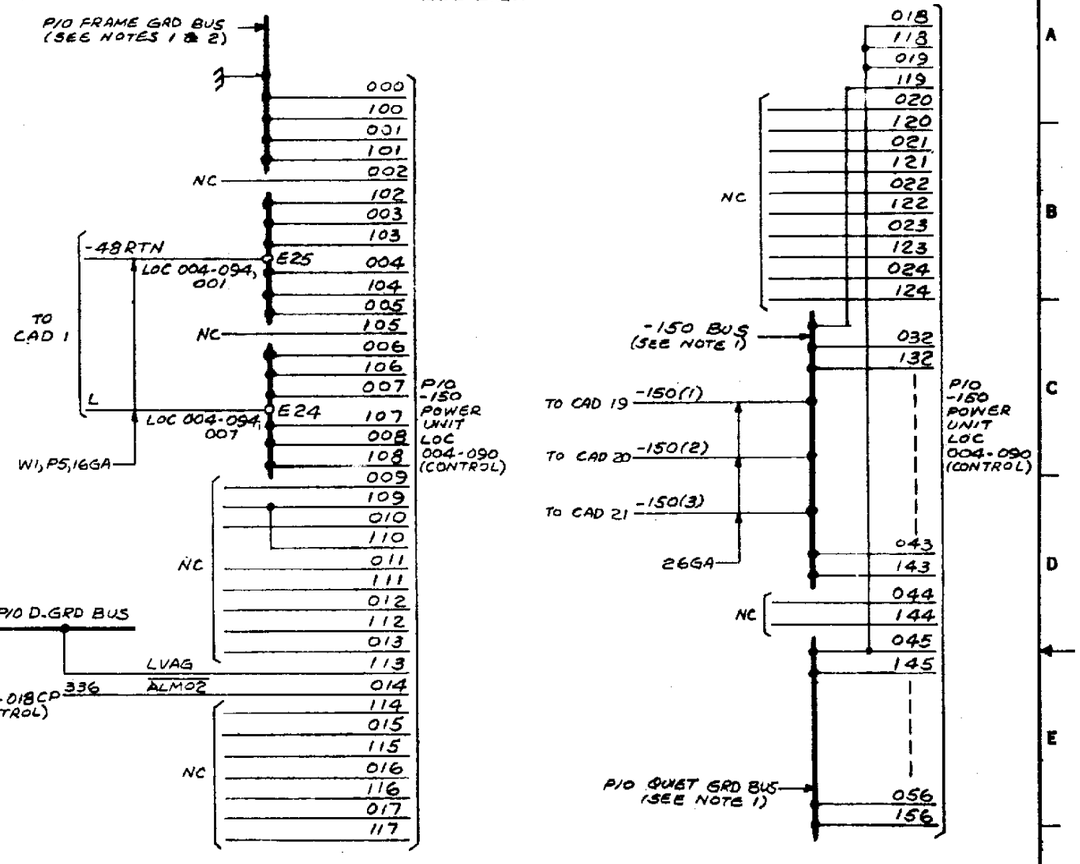

NOTES:

1. ALL BUS CONNECTIONS INDICATE PRINTED WIRING PATHS TO THEIR RESPECTIVE TERMINALS ON THE BACKPLANE.
2. THE FRAME GROUND BUS CONNECTION IS MECHANICALLY MADE WHEN THE BACKPLANE WIRING BOARD IS FASTENED BY THREE SCREWS TO THE MAIN FRAME.

SEE PROPRIETARY NOTICE ON COVER PAGE

DIRECTLY CONNECTED TEST UNIT CIRCUIT

DWG SIZE	ISSUE
A3	1

AT&T BELL LABORATORIES | SD -2P077-01 | SHEET G4

CAD 8
APP FIG. 2,4

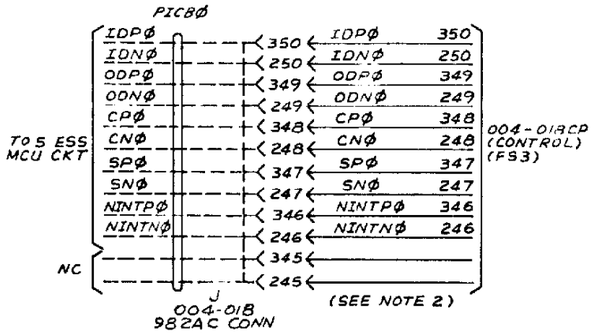

CAD 9
APP FIG. 3,5

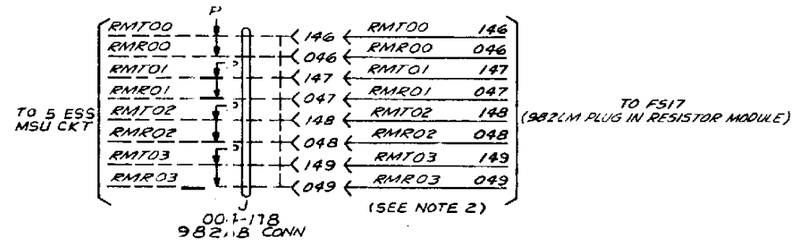

CAD 10
APP FIG. 3,6

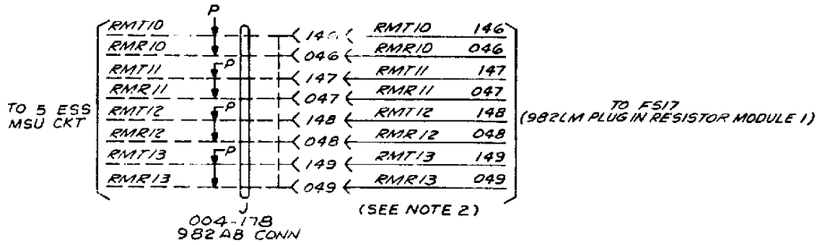

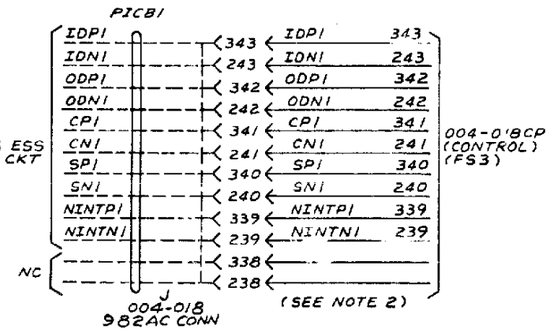

CAD 11
APP FIG. 3,6

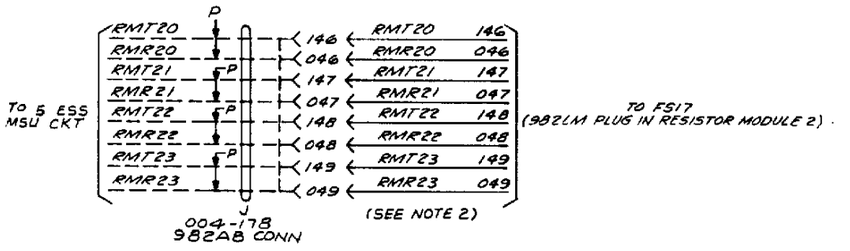

NOTES:

1. STRAPS ARE PRINTED WIRING PATHS ON BACKPLANE.
2. CPS982LM RESISTOR MODULE (104386859) PLUGS INTO THE BACKPLANE PINS. THE 982 TYPE PADDLEBOARD CONNECTOR MATES WITH THE CPS982LM CIRCUIT MODULE.

COPYRIGHT © 1988 AT&T
ALL RIGHTS RESERVED

DIRECTLY CONNECTED TEST UNIT CIRCUIT

DWG SIZE	ISSUE
65	14A

AT&T BELL LABORATORIES | SD -2P077-01 | SHEET G5

CAD 12
APP FIG. 5

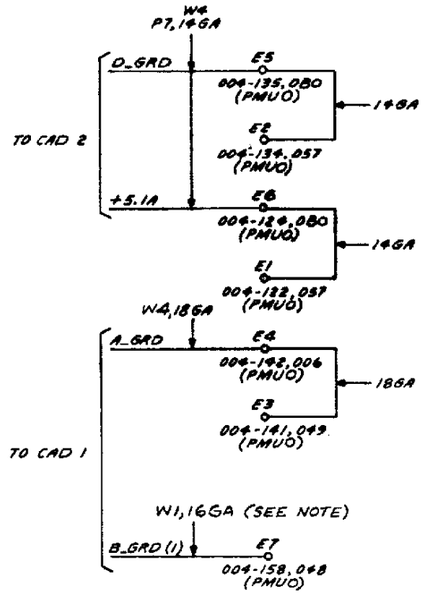

② CAD 13
APP FIG. 6

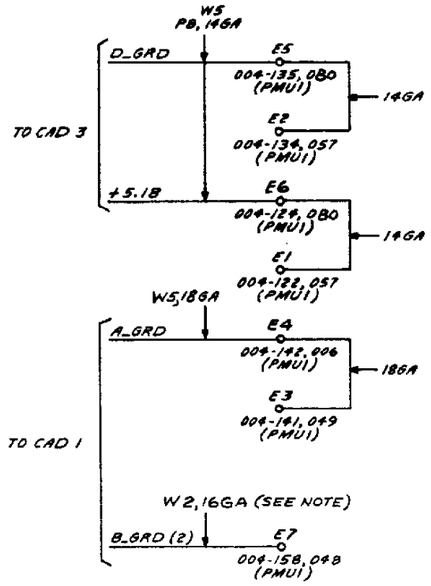

② CAD 14
APP FIG. 6

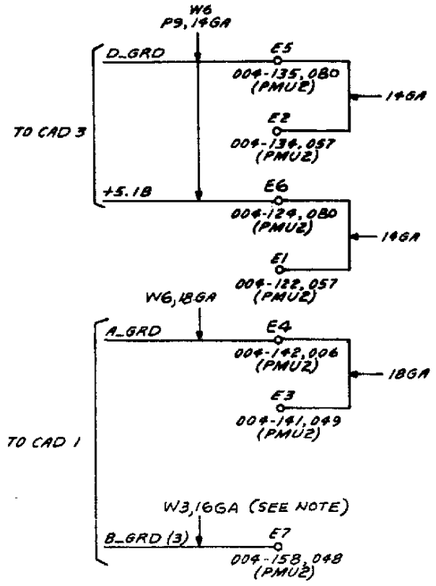

NOTES:

1. B_GRD IS EQUIVALENT TO 5ESS -48RTN.

SEE PROPRIETARY NOTICE ON COVER PAGE

DIRECTLY CONNECTED TEST UNIT CIRCUIT

DWG SIZE: 6S

ISSUE: 13AC

AT&T BELL LABORATORIES

SD-2P077-01-

SHEET: 66

CAD 15
APP FIG. 3, 5

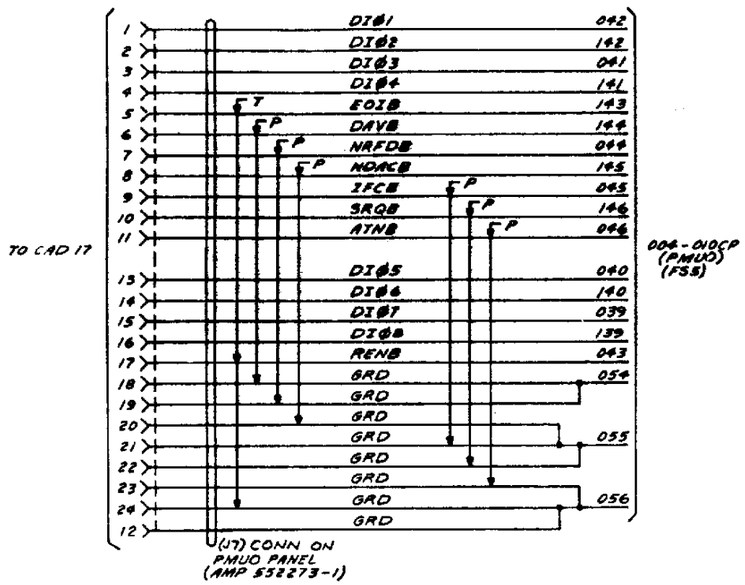

② CAD 16
APP FIG. 3, 6

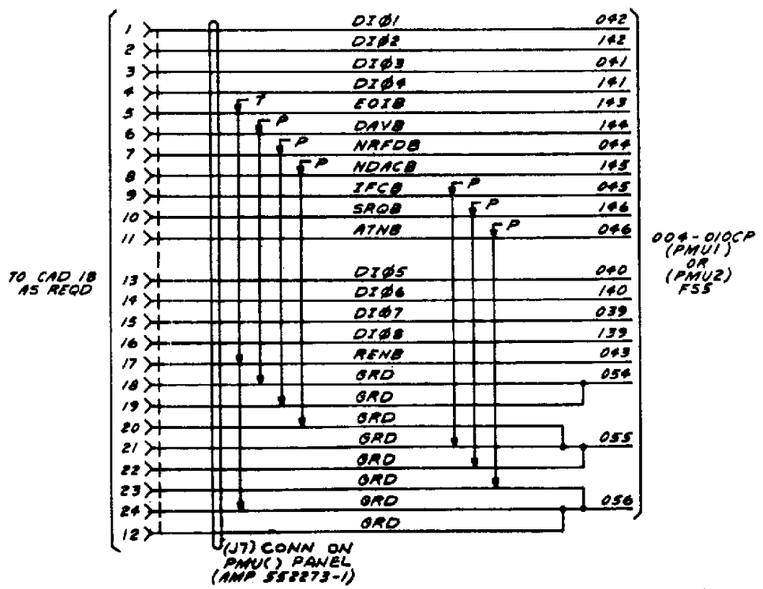

CAD 17
APP FIG. 2

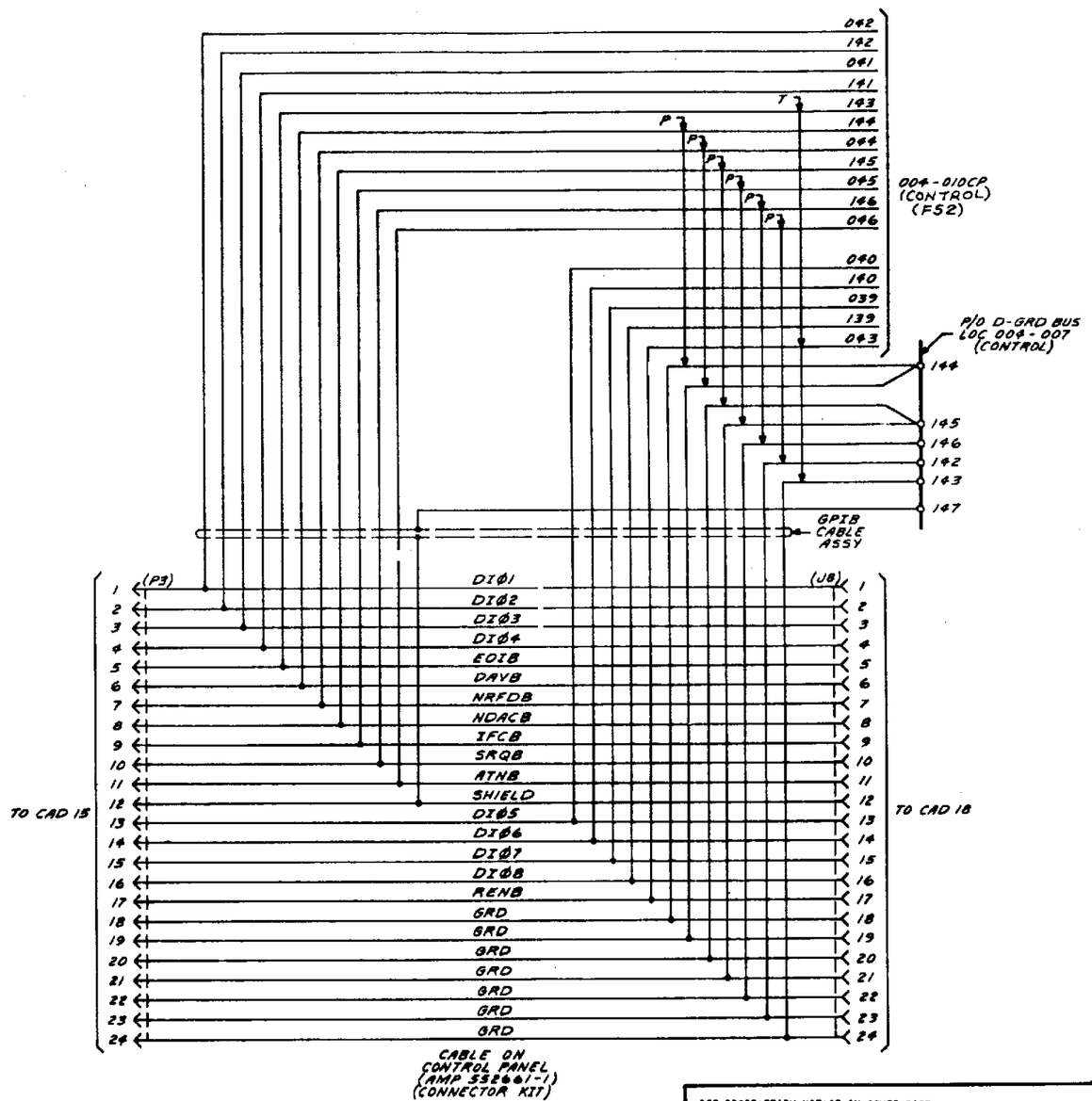

SEE PROPRIETARY NOTICE ON COVER PAGE

DIRECTLY CONNECTED TEST UNIT CIRCUIT

DWG SIZE: A5 | ISSUE: 13AC

AT&T BELL LABORATORIES | SD -2P077-01 | SHEET 07

② CAD 18

APP FIG. 5, 6

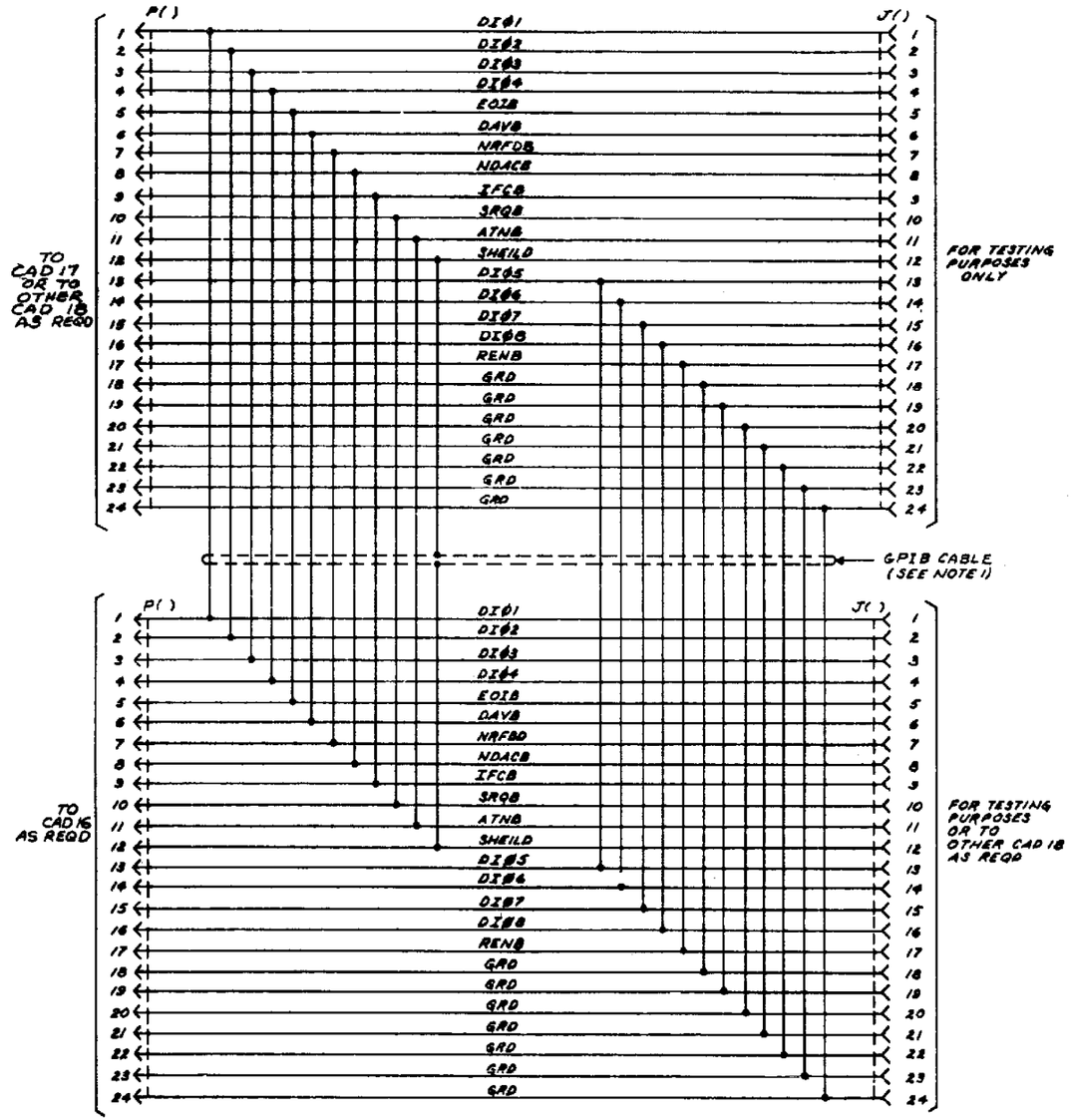

NOTES:

1. THE FOLLOWING DESIGNATIONS SHALL BE STAMPED ON THE CONNECTORS:

CAD	LOC	PLUG	CONNECTOR	GROUP NO.
1ST CAD 18	TOP	P4	J9	3
	BOTTOM	P5	J10	
2ND CAD 18	TOP	P6	J11	4
	BOTTOM	P7	J12	

SEE PROPRIETARY NOTICE ON COVER PAGE

DIRECTLY CONNECTED TEST UNIT CIRCUIT

DWG SIZE: 6S

ISSUE: 2A

AT&T BELL LABORATORIES

SD -2P077-01

SHEET: G8

CAD 19

APP FIG. 2,3,5
QUIET SIDE

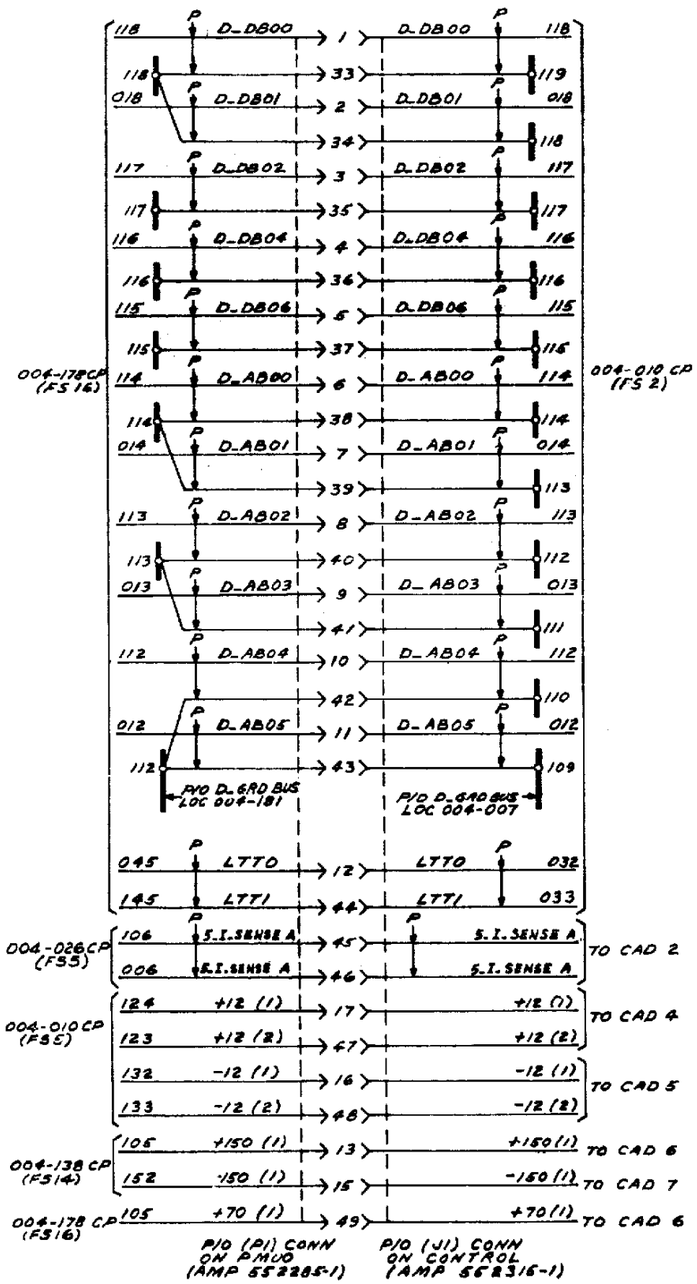

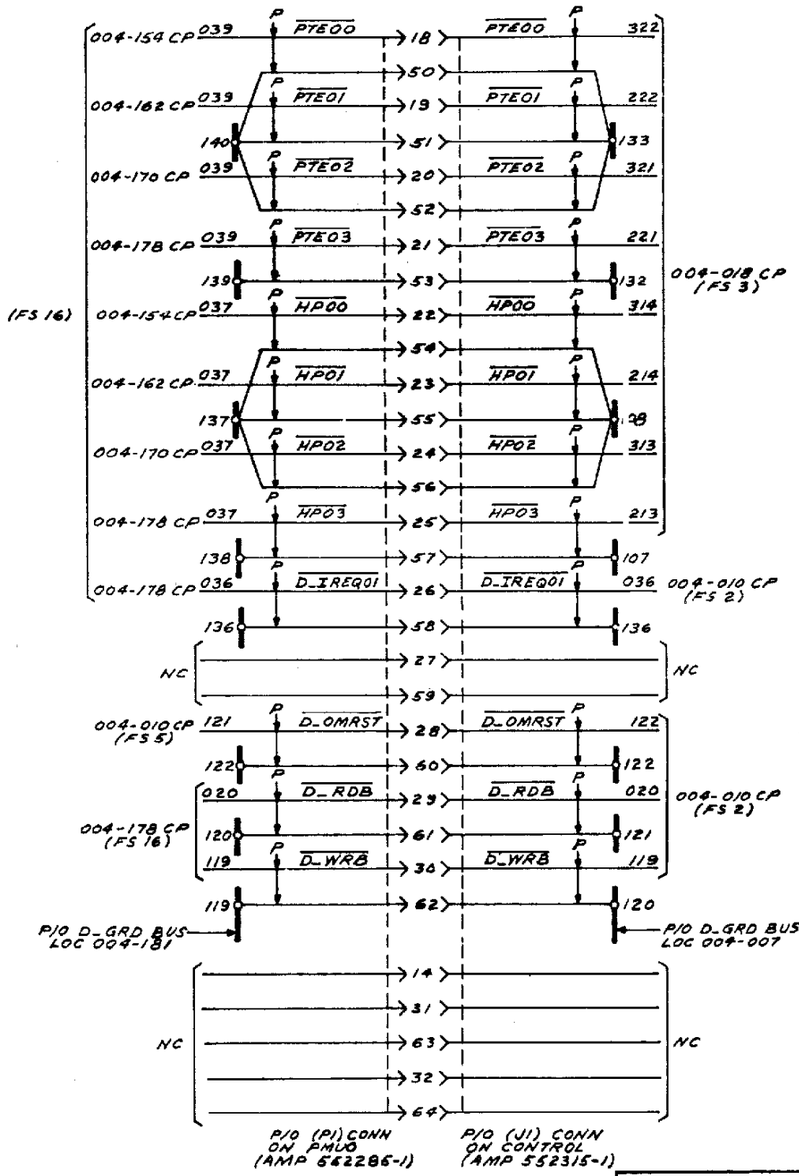

SEE PROPRIETARY NOTICE ON COVER PAGE

DIRECTLY CONNECTED TEST UNIT CIRCUIT

DWG SIZE	ISSUE
65	13AC

AT&T BELL LABORATORIES | SD -2P077-01 | SHEET G9

CAD 20

APP FIG. 2, 3, & 6
QUIET SIDE

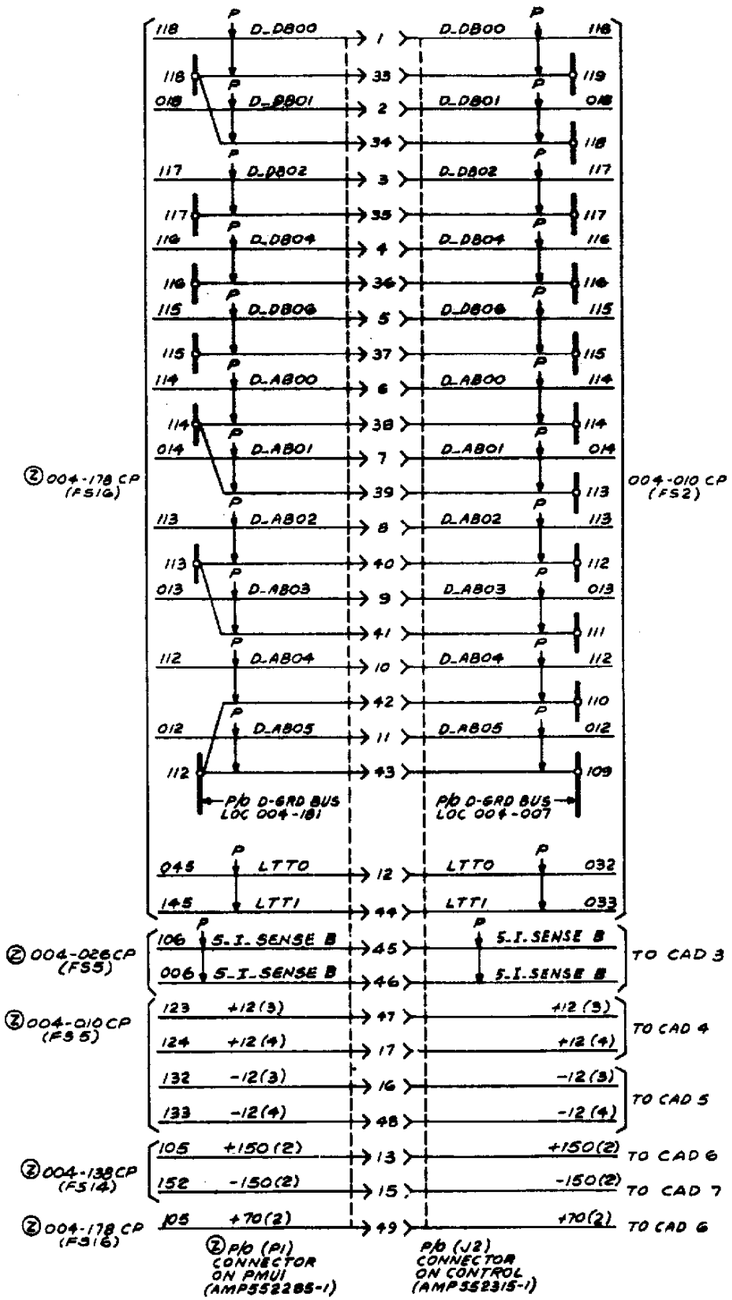

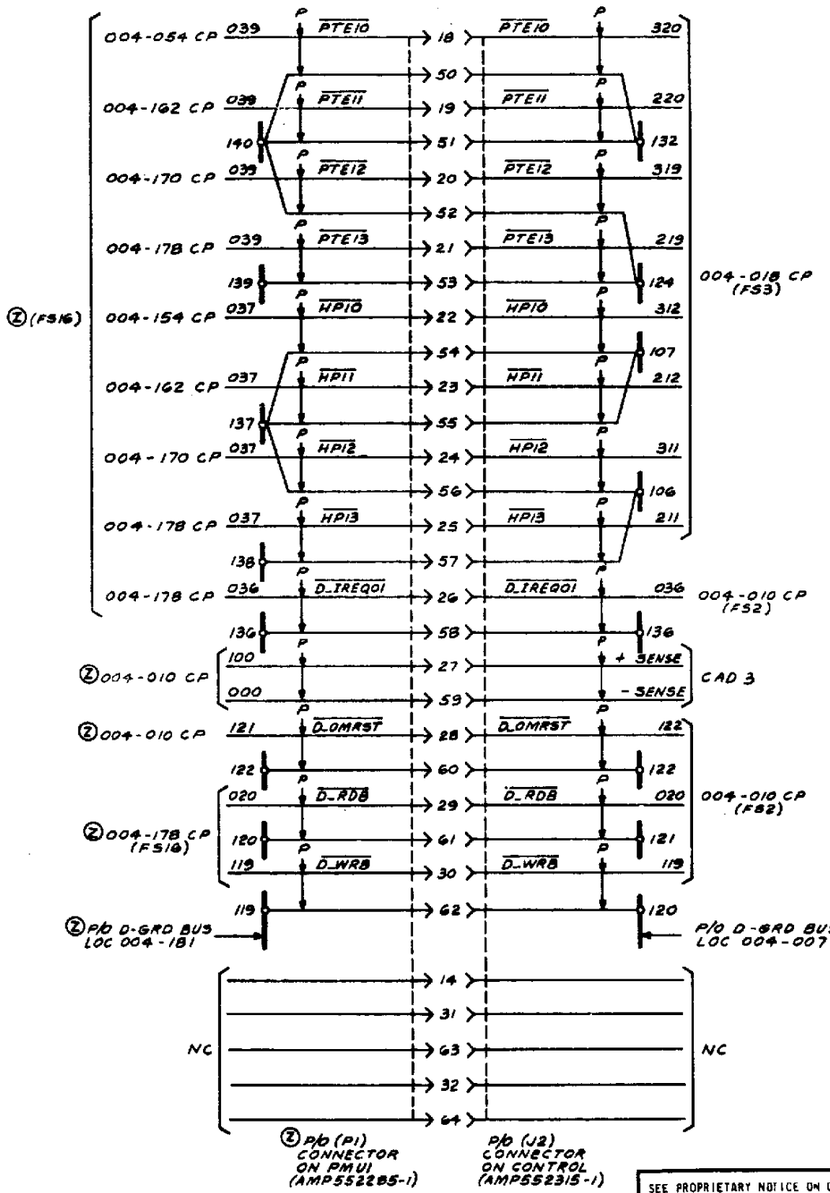

SEE PROPRIETARY NOTICE ON COVER PAGE

DIRECTLY CONNECTED TEST UNIT CIRCUIT

DWG SIZE	ISSUE
6S	13AC

AT&T BELL LABORATORIES | SD -2P077-01 | SHEET G10

CAD 21

APP FIG. 2, 3 & 6
QUIET SIDE

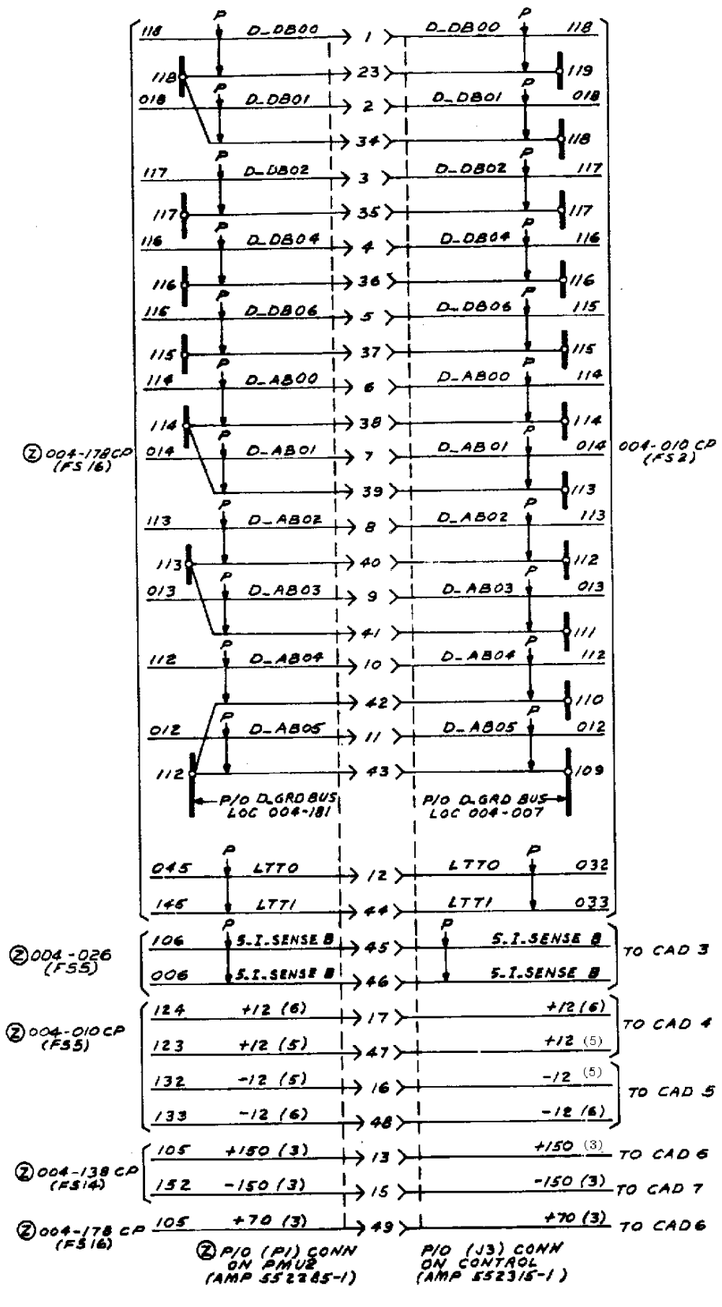

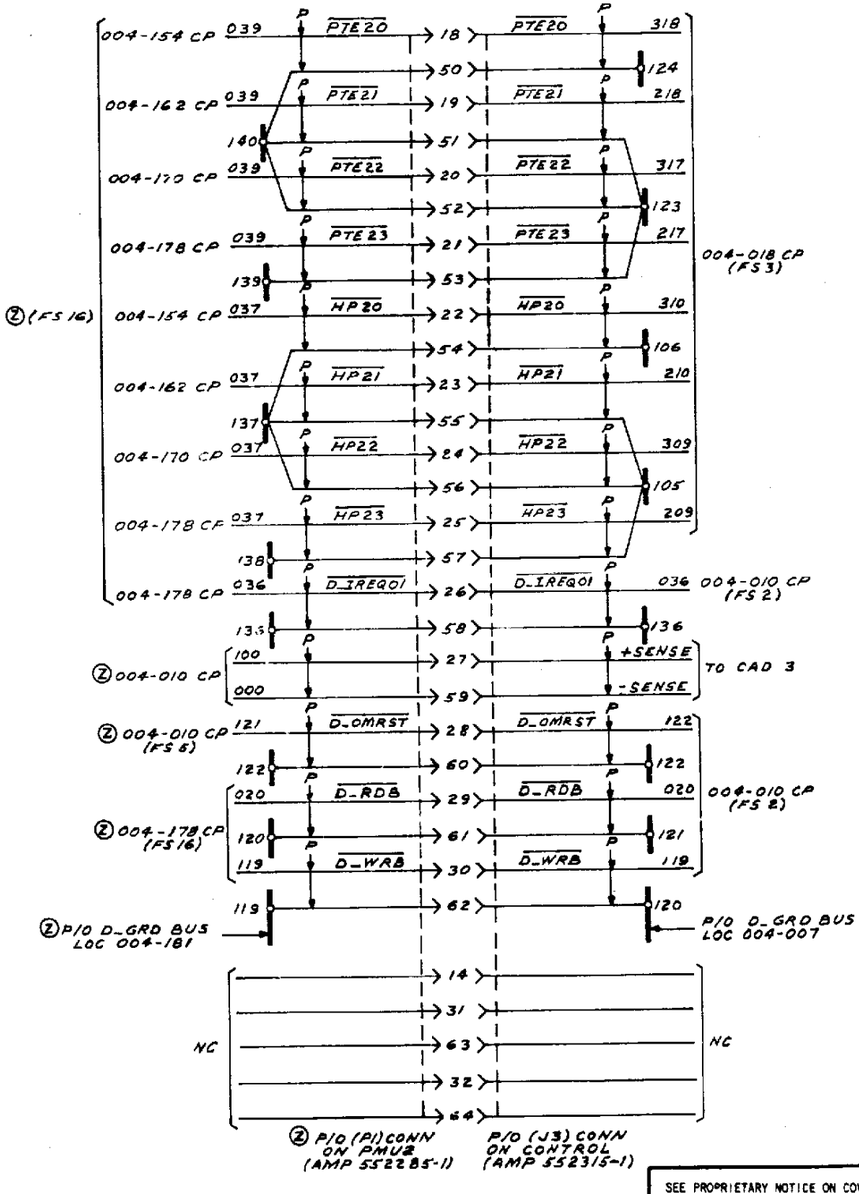

SEE PROPRIETARY NOTICE ON COVER PAGE

DIRECTLY CONNECTED TEST-UNIT CIRCUIT

DWG SIZE	ISSUE
6S	13AC

AT&T BELL LABORATORIES	SD -2P077-01	SHEET G11

CAD 22
FOR APP FIG. 2 & 3
NOISY SIDE

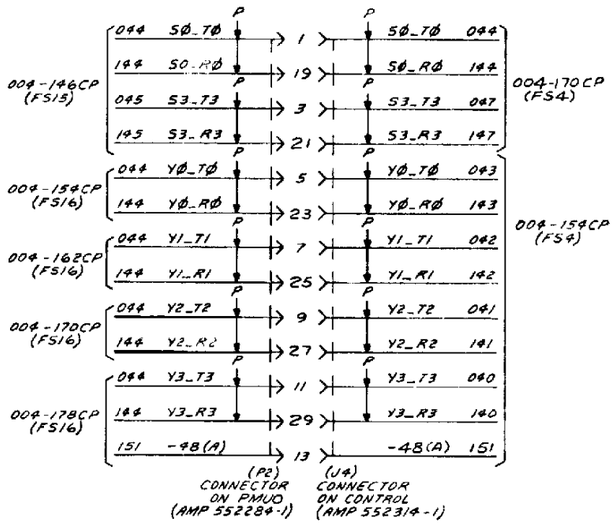

CAD 24
FOR APP FIG. 2 & 3
NOISY SIDE

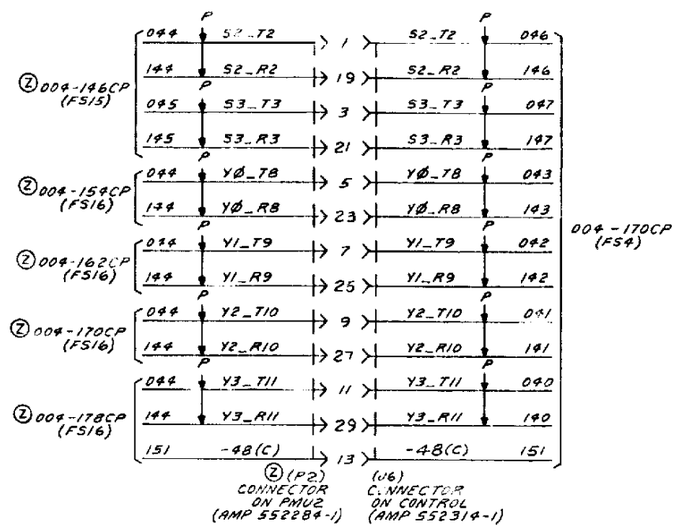

CAD 23
FOR APP FIG. 2 & 3
NOISY SIDE

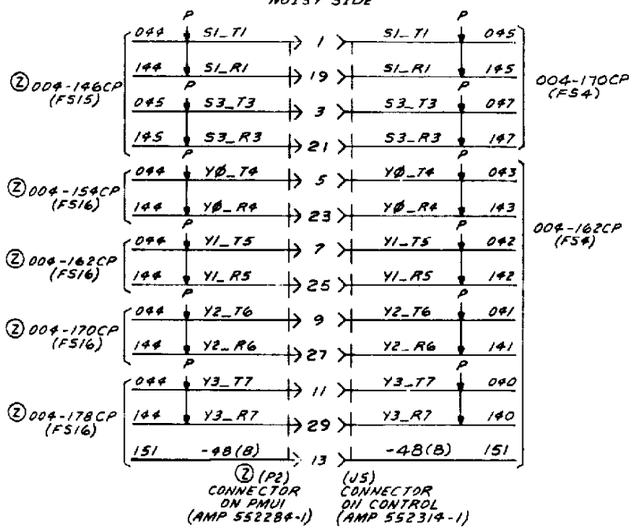

CAD 25
APP FIG 3,5

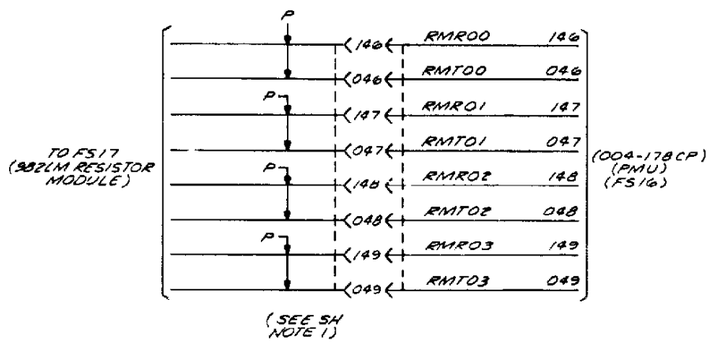

SHEET NOTES:

1. CPS982LM RESISTOR MODULE (1043850591) PLUGS INTO THE BACKPLANE PINS. THE 982 TYPE PADDLEBOARD CONNECTOR MATES WITH THE CPS982LM CIRCUIT MODULE.

COPYRIGHT © 1988 AT&T
ALL RIGHTS RESERVED

DIRECTLY CONNECTED TEST UNIT CIRCUIT

DWG SIZE	ISSUE
6S	14A

AT&T BELL LABORATORIES | SD -2P077-01 | SHEET G12

②CAD 26
APP FIG. 3,6

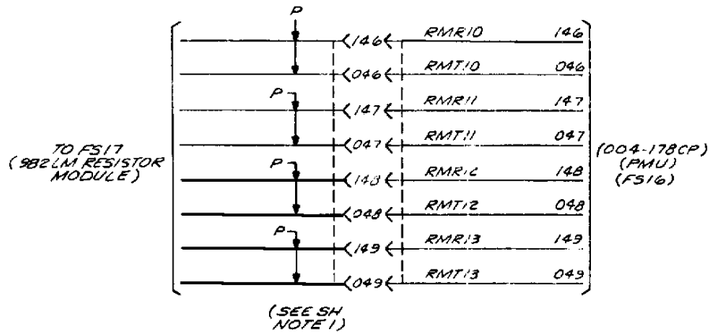

②CAD 27
APP FIG. 3,6

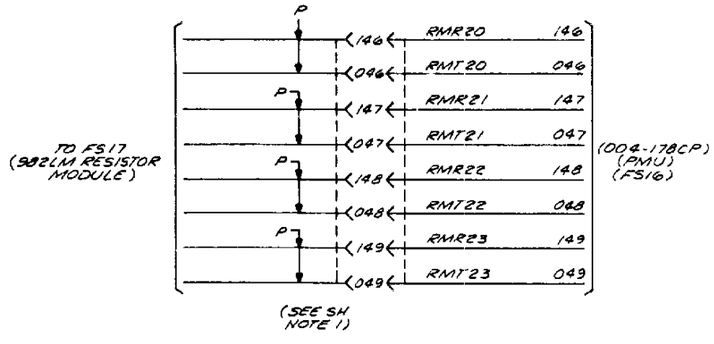

SHEET NOTES:

1. CPS982LM RESISTOR MODULE (1043850591) PLUGS INTO THE BACKPLANE PINS. THE 982 TYPE PADDLEBOARD CONNECTOR MATES WITH THE CPS982LM CIRCUIT MODULE.

COPYRIGHT © 1988 AT&T
ALL RIGHTS RESERVED

DIRECTLY CONNECTED TEST UNIT
CIRCUIT

DWG SIZE	ISSUE
6S	14A

AT&T BELL LABORATORIES	SD-2P077-01	SHEET
		G13