DWG. ISS.	EE OR CD ISSUE	DATE ISSUED	APPROVED
1	1	4-8-49	G.N.T.
2-A	2-A	6-8-49	G.N.T.
3-A	2-A APP. 1-A	9-1-49	G.N.T.
4-AR	3-AR	11-22-49	G.N.T.

FIG. 1
IF BUFFER AMPLIFIER

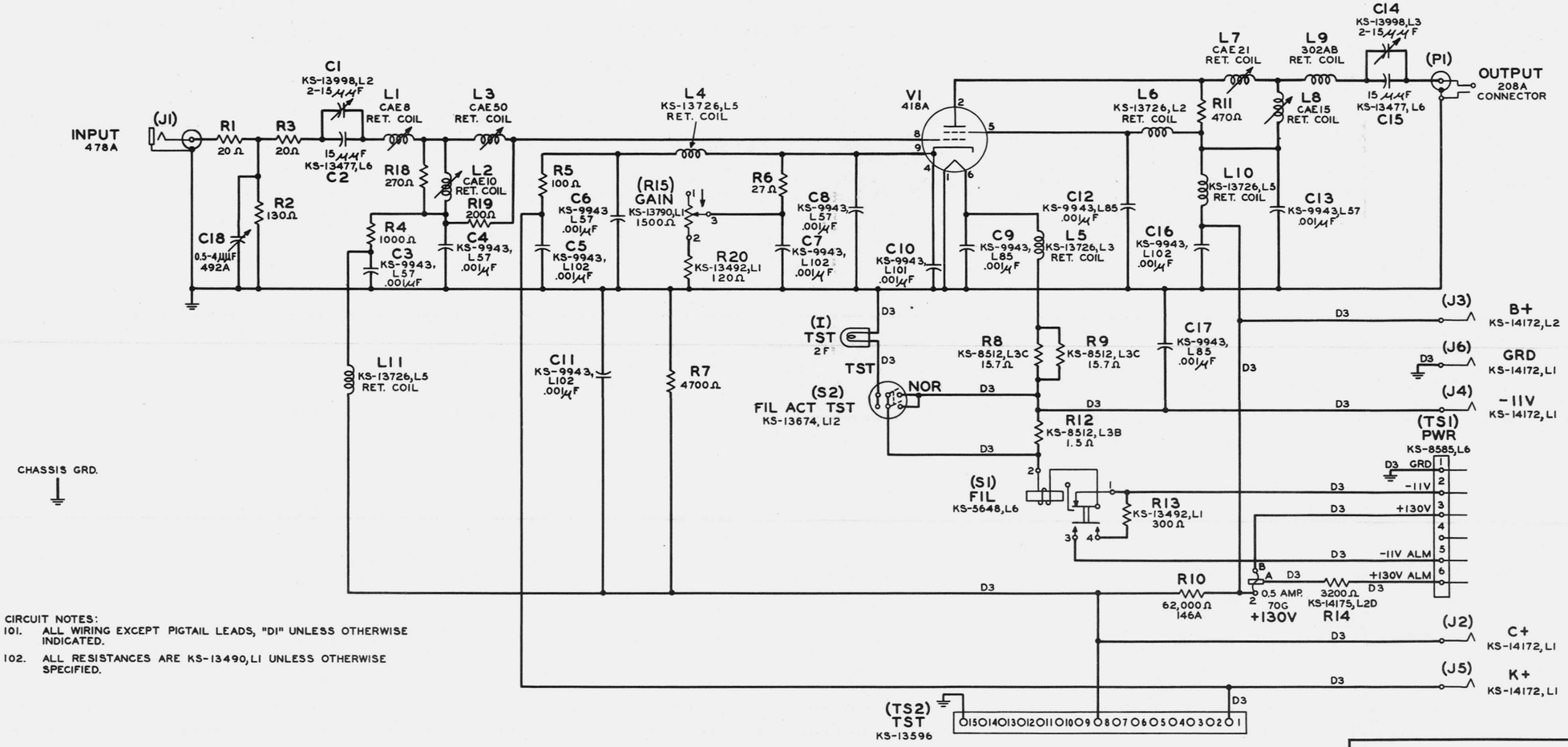

CIRCUIT NOTES:

101. ALL WIRING EXCEPT PIGTAIL LEADS, "D1" UNLESS OTHERWISE INDICATED.

102. ALL RESISTANCES ARE KS-13490,L1 UNLESS OTHERWISE SPECIFIED.

EQUIPMENT NOTES:

201. THE PLACEMENT OF APPARATUS AND ARRANGEMENT OF CRITICAL WIRING MUST BE IN ACCORDANCE WITH EQUIPMENT REQUIREMENTS.

LAST RES. AND COND. USED ON THIS DWG.	
R20	C18
R16 AND R17 NOT USED.	

ED-63539-01
EQUIPMENT INFO.

SD-59396-01

TOLL SYSTEMS
TD RADIO
IF BUFFER AMPLIFIER CKT.

(IF BUFFER AMP)

AT&TCO
STANDARD

O

SD-59396-01

BELL TELEPHONE LABORATORIES, INC.

PRINTED IN U.S.A.

SD-59396-01