CIRCUIT NOTES:
101 ALL WIRING IN FIG. 1 EXCEPT PIGTAIL LEADS IS DI UNLESS OTHERWISE INDICATED.

EQUIPMENT NOTES:
201. THE PLACEMENT OF APPARATUS AND ARRANGEMENT OF CRITICAL WIRING MUST BE IN ACCORDANCE WITH EQUIPMENT REQUIREMENTS.

OPTIONS ON THIS DWG.		
FIGS.		
1		
2		
3		
APP OR WIRING		

LAST RES. AND COND. USED ON THIS DWG.	
R27	C32
C16 NOT USED	
C12 NOT USED	

CHASSIS GRD.

RECORD OF FIGURES, WIRING, AND APPARATUS CHANGES							
CHANGED ON ISS.	IF JOB RECORDS DO NOT SPECIFY	THIS OPTION WAS FURN.	SEE NOTE	USE IN CIRCUIT			
				STD.	A & M	M.D.	
4-D	A & B	A		B		A	

DWG ISS.	C.D. ISSUE	DATE ISSUED	DWG ISS.	C.D. ISSUE	DATE ISSUED
1	1	12-30-48	2-A	APP.	10-27-49

DWG ISS.	C.D. ISSUE	DATE ISSUED	APPROVED
3-A	2-A	2-21-49	G.N.T.
4-D	3-D	12-22-49	G.N.T.

FIG. 1
SEE NOTE 101

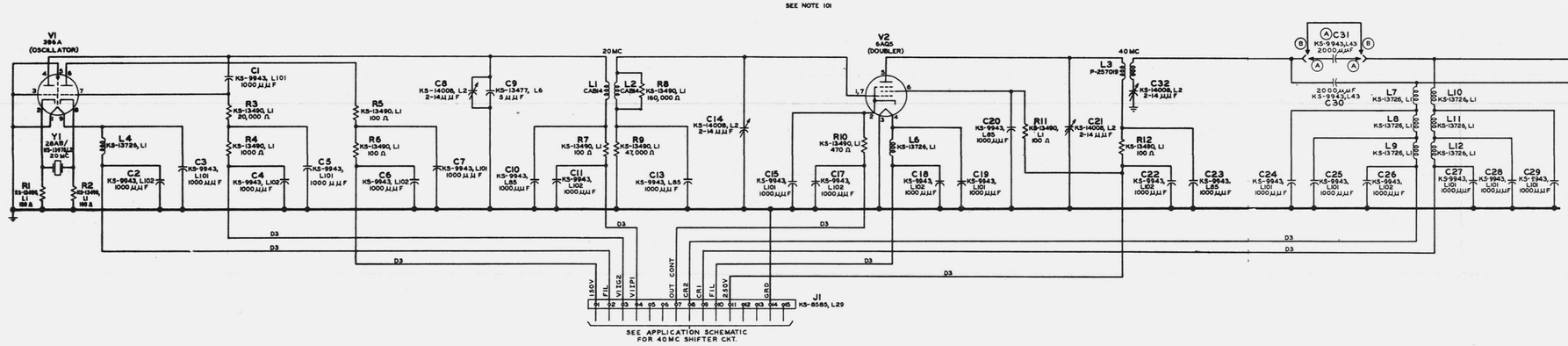

FIG. 2

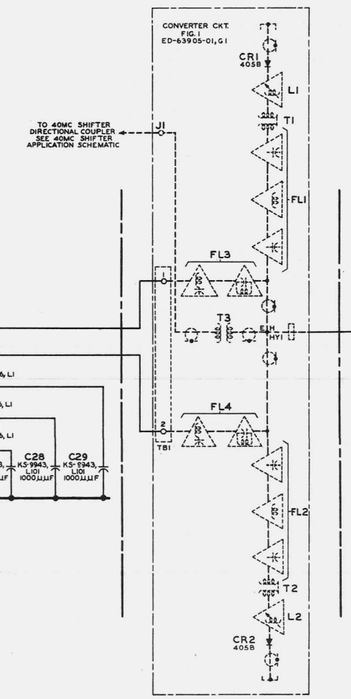

FIG. 3

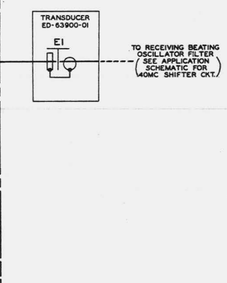

ED-63934-01
ED-63905-01
EQUIPMENT INFO.

SD-59410-01

TOLL SYSTEMS
TD RADIO
40 MC GENERATOR
AND SHIFTER CONVERTER CKT.
(40MC GENERATOR & SHIFTER CONVERTER)

AT&TCO
STANDARD

R3

SD-59410-01

BELL TELEPHONE LABORATORIES, INC.

PRINTED IN U.S.A.

SD-59410-01