SHEET INDEX

CONTENTS	SHEET NO.	SHEET ISSUE NO.
SHEET INDEX SUPPORTING INFORMATION USED ON TABLE	A1	3
DESIGNATION MNEMONICS INDEX	A2	1
	A3	1
APPARATUS INDEX	A4	2
LEAD INDEX OPTION INDEX	A5	1
PART OF FS 1 & 2 COMPOSITE DIAGRAMS 1-5	B1AA	2
	B1AB	2
	B1AC	2
	B1AD	2
	B1AE	2
	B1AF	2
FS 1 LU3 LOWER SHELF	B1CA	1
	B1CB	1
	B1CC	1
	B1CD	2
	B1CE	2
	B1CF	1
	B1CG	1
	B1CH	1
	B1CJ	1
	B1CK	1
	B1CL	1
	B1CM	1
	B1CN	1
	B1CP	1
	B1CR	1
	B1CT	1
	B1CU	1
	B1CV	2
	B1CW	2
	B1CX	2
	B1CY	2
	B1DA	2
	B1DB	2
	B1DC	2
	B1DD	1
FS 2 LU3 UPPER SHELF	B2CA	1
	B2CB	1
	B2CC	1
	B2CD	2
	B2CE	2
	B2CF	1
	B2CG	1
	B2CH	1
	B2CJ	1
FS 2 LU3 UPPER SHELF (CONT)	B2CK	1
	B2CL	1
	B2CM	1
	B2CN	1
	B2CP	1
	B2CR	1
	B2CT	2
	B2CU	2
	B2CV	2
	B2CW	2
	B2CX	2
	B2CY	2
	B2DA	2
	B2DB	1
APPARATUS FIGURES 1-41	C1	3
	C2	2
	C3	3
	C4	2
CIRCUIT NOTES	D1A	1
EQUIPMENT NOTES	D2A	3
INFORMATION NOTES	D3A	3
UNIT SYMBOL TABLE OF CONTENTS	GB1A	1
	GB1B	1
CIRCUIT ACCESS REFERENCE DATA	GB1C	1
CAD 1 UNIT SYMBOL	GB2	1
	GB3	1
	GB4	1
	GB5	1
	GB6	1
	GB7	1
	GB8	1
	GB9	1
CAD 1 UNIT SYMBOL (CONT)	GB10	1
	GB11	1
	GB12	1
BD 1 BLOCK DIAGRAM	H1	2

DWG ISSUE	CD ISSUE	DATE ISSUED		APPR
1	1	9-20-87		
2M	1 APPX 1M	4-17-87		
3M	1 APPX 2M	4-8-88		

USED ON

FRAME SD	PROJECT	DSGN CONT
SD-50012-02	5ESS	IH

SUPPORTING INFORMATION

CATEGORY	NO.
EQUIPMENT DRAWING	J50004AD

Copyright 1988 AT&T
All Rights Reserved

AT13

5ESS® SWITCHING EQUIPMENT
LINE UNIT, MODEL 3
CIRCUIT

(LU3)

DWG SIZE 6B

ISSUE 3M

AT&T | SD-50180-01 | SHEET A1 OF 81

DESIGNATION MNEMONICS INDEX

MNEMONIC	ES/SYM	DEFINITION
+260V(0,1)	1,2/10	+260V(SERVICE GROUP): V+ POWER SUPPLY FOR THE ACCESS NETWORK IN A SERVICE GROUP
+295V(0,1)	1,2/10	+295V(SERVICE GROUP): VO POWER SUPPLY FOR THE ACCESS NETWORK IN A SERVICE GROUP
+297V(0,1)	1,2/10	+297V(SERVICE GROUP): V+G POWER SUPPLY FOR THE ACCESS NETWORK IN A SERVICE GROUP
+300V(00-19)	1/14,17, 20,23,26, 29,32,35, 38,41	+300V(HALF-GRID): V++ POWER SUPPLY FOR A GRID
+300VR(0,1)	1,2/10	+300VR(SERVICE GROUP): V++OR POWER SUPPLY FOR THE ACCESS NETWORK IN A SERVICE GROUP
+300VSG(0,1)	1/11	+300VSG(SERVICE GROUP): V++ POWER SUPPLY FOR THE ACCESS NETWORK IN A SERVICE GROUP
+5V(0,1)	1,2/10	+5V(SERVICE GROUP): +5 VOLT POWER FOR THE ACCESS NETWORK IN A SERVICE GROUP
+5V(04,13)	1/1	+5 VOLT POWER FOR SERVICE GROUPS (0,1)
-48RTN(0,1)C	1/1,9	-48RTN(SERVICE GROUP)C: THE CONTROL LEAD TO THE POWER CONVERTER FROM THE COMDAC PACK FOR CONTROL OF THE OUT-OF-SERVICE LAMP IN A SERVICE GROUP
-48V(00,10)	1,2/1	-48 VOLT POWER SUPPLY FOR THE POWER CONVERTER AND HIGH LEVEL SERVICE CIRCUITS IN SERVICE GROUP (0,1)
-48V(01,11)	1,2/5	-48 VOLT POWER SUPPLY FOR THE CHANNEL PACKS, COMDAC PACK, AND ACCESS NETWORK IN SERVICE GROUP(0,1)
-48V(02-06)	1/14,20, 26,32,38	-48 VOLT POWER SUPPLY FOR GRIDS 0,2,4,6, AND 8 RESPECTIVELY
-48V(12-16)	2/14,20, 26,32,38	-48 VOLT POWER SUPPLY FOR GRIDS 1,3,5,7, AND 9 RESPECTIVELY
-48V(07,17)	1,2/42	-48 VOLT POWER SUPPLY FOR THE AUXILIARY PACK IN SERVICE GROUP (0,1)
-5V(0,1)	1,2/1	-5 VOLT POWER SUPPLY FOR SERVICE GROUP (0,1)
FGRD	1/1	FRAME GROUND FOR THE LINE UNIT
GRD(EQL)	FS 1 & 2	GROUND RETURN FOR THE LINE UNIT
RB(0-63)	1/10,11, 14,17	RING B-LINK(B-LINK)
RNG(00-31)	1/5-8	RING(C-LINK): C-LINKS IN SERVICE GROUP 0
RNG(32-63)	2/5-8	RING(C-LINK): C-LINKS IN SERVICE GROUP 1
R(0-9)(0,1)(0-7) (0-3)	1,2/12,15, 18,21,24, 27,30,33, 36,39	LINE RING(GRID)(SWITCH GROUP) (SWITCH)(SWITCH INPUT LEVEL)
TB(0-63)	1/10,11, 14,17	TIP B-LINK (B-LINK)

MNEMONIC	ES/SYM	DEFINITION
TIP(00-31)	1/5-8	TIP(C-LINK): C-LINKS IN SERVICE GROUP 0
TIP(32-63)	2/5-8	TIP(C-LINK): C-LINKS IN SERVICE GROUP 1
T(0-9)(0,1)(0-7) (0-3)	1,2/13,16, 19,22,25, 28,31,34, 37,40	LINE TIP(GRID)(SWITCH GROUP) (SWITCH)(SWITCH INPUT LEVEL)
(0,1)AASW(0,1)	1,2/9	(SERVICE GROUP)AASW(0,1): THE CONTROL ASW FROM THE AUXILIARY PACK TO THE COMDAC PACK
(0,1)ACASW0	1,2/9	(SERVICE GROUP)ACASW0: THE CONTROL ASW FROM THE ACCESS POWER AND CONTROL PACK TO THE COMDAC PACK
(0,1)ACASW1	1,2/9	(SERVICE GROUP)ACASW1: THE CONTROL ASW FROM THE LINEARIZATION PACK TO THE COMDAC PACK
(0,1)ACBUS(0-7)R	1,2/2-4, 10	(SERVICE GROUP)ACBUS(BUS)R: THE RING LEAD OF THE ACCESS BUSES FOR THE HLSC AND THE ACCESS NETWORK IN A SERVICE GROUP
(0,1)ACBUS(0-7)T	1,2/2-4, 10	(SERVICE GROUP)ACBUS(BUS)T: THE TIP LEAD OF THE ACCESS BUSES FOR THE HLSC AND THE ACCESS NETWORK IN A SERVICE GROUP
(0,1)ACCK0	1,2/9	(SERVICE GROUP)ACCK0: THE DATA SHIFT CLOCK LEAD FROM THE COMDAC PACK TO THE ACCESS POWER AND CONTROL PACK IN A SERVICE GROUP
(0,1)ACCK1	1,2/9	(SERVICE GROUP)ACCK1: THE DATA SHIFT CLOCK LEAD FROM THE COMDAC PACK TO THE LINEARIZATION PACK IN A SERVICE GROUP
(0,1)ACDATA0	1,2/9	(SERVICE GROUP)ACDATA0: THE SERIAL DATA LEAD FROM THE COMDAC PACK TO THE ACCESS POWER AND CONTROL PACK IN A SERVICE GROUP
(0,1)ACDATA1	1,2/9	(SERVICE GROUP)ACDATA1: THE SERIAL DATA LEAD FROM THE COMDAC PACK TO THE LINEARIZATION PACK IN A SERVICE GROUP
(0,1)ACEN0	1,2/9	(SERVICE GROUP)ACEN0: THE CONTROL ENABLE LEAD FROM THE COMDAC PACK TO THE ACCESS POWER AND CONTROL PACK IN A SERVICE GROUP
(0,1)ACEN1	1,2/9	(SERVICE GROUP)ACEN1: THE CONTROL ENABLE LEAD FROM THE COMDAC PACK TO THE LINEARIZATION PACK IN A SERVICE GROUP
(0,1)ANLED	1/9,11	(SERVICE GROUP)ANLED: THE OUT-OF-SERVICE INDICATOR LEAD FROM THE COMDAC PACK TO AN ACCESS NETWORK IN A SERVICE GROUP
(0,1)ASWG(0-9) (0,1)	1/9,14,17, 20,23,26, 29,32,35, 38,41,2/9	(SERVICE GROUP)ASWG (GRID)(HALF-GRID): ALL SEEMS WELL (ASW) FROM A HALF-GRID WITHIN A GRID TO THE COMDAC PACK IN A SERVICE GROUP

MNEMONIC	ES/SYM	DEFINITION
(0,1)CASW(0,1) (0-3)	1,2/5-8	(SERVICE GROUP)CASW(0,1) (CHANNEL PACK): THE ALL SEEMS WELL (ASW) FROM THE CHANNEL PACKS TO THE COMDAC PACK IN A SERVICE GROUP
(0,1)CA(0-7)	1,2/5-8	(SERVICE GROUP)CA(ADDRESS LEAD): THE A0-A7 CONTROL ADDRESSING LEADS FROM THE COMDAC PACK TO THE CHANNEL PACKS IN A SERVICE GROUP
(0,1)CB(0-3)	1,2/5	(SERVICE GROUP)CB(ADDRESS LEAD): THE B0-B3 CONTROL ADDRESSING LEADS FROM THE COMDAC PACK TO THE CHANNEL PACKS IN A SERVICE GROUP
(0,1)CDSCLK	1,2/5	(SERVICE GROUP)CDSCLK: THE DATA SHIFT CLOCK LEAD FROM THE COMDAC PACK TO THE CHANNEL PACKS IN A SERVICE GROUP
(0,1)CDSYNC(0-3)	1,2/5-8	(SERVICE GROUP)CDSYNC(CHANNEL PACK): THE 256K SYNC FOR THE CHANNEL CIRCUIT CODEC FROM THE COMDAC PACK IN A SERVICE GROUP
(0,1)CDW	1,2/5	(SERVICE GROUP)CDW: THE SERIAL DATA LEAD FROM THE COMDAC PACK TO THE CHANNEL PACKS IN A SERVICE GROUP
(0,1)CHDAI(0-3)	1,2/5-8	(SERVICE GROUP)CHDAI(CHANNEL PACK): THE PCM DATA LEAD FROM THE CHANNEL PACKS TO THE COMDAC PACK IN A SERVICE GROUP
(0,1)CHDAO(0-3)	1,2/5-8	(SERVICE GROUP)CHDAO(CHANNEL PACK): THE PCM DATA LEAD FROM THE COMDAC PACK TO THE CHANNEL PACKS IN A SERVICE GROUP
(0,1)CHDI	1,2/5	(SERVICE GROUP)CHDI: THE SERIAL DATA LEAD FOR TRANSFER OF THE 16-BIT CONTROL BUFFER DATA FROM THE CHANNEL PACK TO THE COMDAC PACK IN A SERVICE GROUP
(0,1)CHRD	1,2/5	(SERVICE GROUP)CHRD: THE CONTROL READ LEAD FROM THE COMDAC PACK TO THE CHANNEL PACKS IN A SERVICE GROUP
(0,1)CLAUX	1,2/9	(SERVICE GROUP)CLAUX: THE DATA SHIFT CLOCK FROM THE COMDAC PACK TO THE AUXILIARY PACK IN A SERVICE GROUP
(0,1)CLG(0-7)	1/9,14,20, 26,32,2/9	(SERVICE GROUP)CLG(GRID): THE DATA SHIFT CLOCK FROM THE COMDAC PACK TO A GRID
(0,1)CLHG(8-9) (0,1)	1/9,38,41, 2/9	(SERVICE GROUP)CLHG(GRID) (HALF-GRID): THE DATA SHIFT CLOCK FROM THE COMDAC PACK TO A HALF-GRID WITHIN A GRID
(0,1)CLK(0,1) (N,P)	1,2/9	(SERVICE GROUP) CLK (MCU SIDE) (POLARITY): THE CLOCK LEAD IN THE PICB FROM THE MCU TO THE COMDAC PACK IN A SERVICE GROUP
(0,1)CURPR(N,P)	1,2/1	(SERVICE GROUP) CURPR (POLARITY): THE CURRENT PROGRAMMING RESISTOR LEAD FOR A SERVICE GROUP
(0,1)CW2	1,2/5	(SERVICE GROUP)CW2: THE W2 WRITE CONTROL LEAD FROM TH COMDAC PACK TO THE CHANNEL PACKS IN A SERVICE GROUP

MNEMONIC	ES/SYM	DEFINITION
(0,1)DAIN(0,1) (N,P)	1,2/9	(SERVICE GROUP)DAIN(TSIU SIDE) (POLARITY): THE PCM DATA LEAD IN THE PIDB FROM THE TSIU TO THE COMDAC PACK IN A SERVICE GROUP
(0,1)DAUX	1,2/9	(SERVICE GROUP)DAUX: BIDIRECTIONAL SERIAL DATA/ADDRESS LEAD BETWEEN THE COMDAC PACK AND AUXILIARY PACK OF A SERVICE GROUP
(0,1)DAOT(0,1) (N,P)	1,2/9	(SERVICE GROUP)DAOT(TSIU SIDE) (POLARITY): THE PCM DATA LEAD IN THE PIDB FROM THE COMDAC PACK IN A SERVICE GROUP TO THE TSIU
(0,1)DG(0-7)	1/9,14,20, 26,32,2/9	(SERVICE GROUP)DG(GRID): THE SERIAL DATA LEAD FROM THE COMDAC PACK TO A GRID
(0,1)DG(8,9)(0,1)	1/9,38,41, 2/9	(SERVICE GROUP)DG(GRID) (HALF-GRID): THE SERIAL DATA LEAD FROM THE COMDAC PACK TO A HALF-GRID WITHIN A GRID
(0,1)EAUX	1,2/9	(SERVICE GROUP)EAUX: THE CONTROL ENABLE LEAD FROM THE COMDAC PACK TO AN AUXILIARY PACK IN A SERVICE GROUP
(0,1)EG(0-9)(0,1)	1/9,14,17, 20,23,26, 29,32,35, 38,41,2/9	(SERVICE GROUP)EG(GRID) (HALF-GRID): THE CONTROL ENABLE LEAD FROM THE COMDAC PACK TO A HALF-GRID WITHIN A GRID
(0,1)HASW(0,1) (0-2)	1,2/2-4	(SERVICE GROUP)HASW(0,1) (HLSC): THE ALL SEEMS WELL (ASW) FROM THE HLSCS TO THE COMDAC PACK IN A SERVICE GROUP
(0,1)HCK(0-2)	1,2/2-4	(SERVICE GROUP)HCK(HLSC): THE DATA SHIFT CLOCK LEAD FROM THE COMDAC PACK TO THE HLSCS
(0,1)HDATA(0-2)	1,2/2-4	(SERVICE GROUP)HDATA (HLSC): THE SERIAL DATA LEAD FROM THE HLSCS TO THE COMDAC PACK IN A SERVICE GROUP
(0,1)HDATA(0-2)0	1,2/2-4	(SERVICE GROUP)HDATA (HLSC)(DATA LEAD): THE SERIAL DATA OUT LEAD TIE ON THE HLSCS IN A SERVICE GROUP
(0,1)HDCK(0-2)	1,2/2-4	(SERVICE GROUP)HDCK(HLSC): THE DATA SHIFT CLOCK LEAD TIE ON THE HLSCS IN A SERVICE GROUP
(0,1)HDW(0-2)	1,2/2-4	(SERVICE GROUP)HDW(HLSC): THE SERIAL DATA IN LEAD TIE ON THE HLSCS IN A SERVICE GROUP
(0,1)HEN(0-2)	1,2/2-4	(SERVICE GROUP)HEN(HLSC): THE CONTROL ENABLE LEAD FROM THE COMDAC PACK TO THE THE HLSCS IN A SERVICE GROUP
(0,1)HEN(0-2)0	1,2/2-4	(SERVICE GROUP)HEN(HLSC) (CONTROL LEAD): THE CONTROL ENABLE LEAD TIE ON THE HLSCS IN A SERVICE GROUP

COPYRIGHT (C) 1987 AT&T
ALL RIGHTS RESERVED

LINE UNIT, MODEL 3	DWG SIZE C2	ISSUE 1
AT&T BELL LABORATORIES	SD-5D180-01	A2

DESIGNATION MNEMONICS INDEX

MNEMONIC	ES/SYM	DEFINITION
(0,1)HR(0-2)	1,2/2-4	(SERVICE GROUP)HR(HLSC): THE READ CONTROL LEAD TIE ON THE HLSCS IN A SERVICE GROUP
(0,1)HW(0-2)	1,2/2-4	(SERVICE GROUP)HW(HLSC): THE WRITE CONTROL LEAD TIE ON THE HLSCS IN A SERVICE GROUP
(0,1)MSG(0,1) (N,P)	1,2/9	(SERVICE GROUP)MSG (MCU SIDE)(POLARITY): THE SERIAL CONTROL ORDER LEAD FROM THE MCU TO THE COMDAC PACK IN A SERVICE GROUP
(0,1)MTB(R,T)	1,2/10	(SERVICE GROUP)MTB(RING,TIP): THE MAINTENANCE TEST BUS FOR A SERVICE GROUP
(0,1)NINT(0,1) (N,P)	1,2/9	(SERVICE GROUP)NINT(MCU SIDE) POLARITY): THE REMOTE SERVICE REQUEST LEAD IN THE PIDB FROM THE COMDAC PACK IN A SERVICE GROUP TO THE MCU
(0,1)PAA	1,2/9	(SERVICE GROUP)PAA: THE POWER ALARM FROM AN AUXILIARY PACK TO THE COMDAC PACK IN A SERVICE GROUP
(0,1)PAG(0-9) (0,1)	1/9,14,17, 20,23,26, 29,32,35, 38,41,2/9	(SERVICE GROUP)PAG(GRID) (HALF-GRID): THE POWER ALARM FROM A HALF-GRID WITHIN A GRID TO THE COMDAC PACK IN A SERVICE GROUP
(0,1)PRALM0	1,2/9	(SERVICE GROUP)PRALM0: THE POWER ALARM FROM THE ACCESS POWER AND CONTROL PACK TO THE COMDAC PACK IN A SERVICE GROUP
(0,1)RNGSUP(0-2)	1,2/2-4	(SERVICE GROUP)RNGSUP(HLSC): THE RINGTRIP SUPERVISION FROM THE HLSCS TO THE COMDAC PACK IN A SERVICE GROUP
(0,1)RNG(0-2)	1,2/2-4	(SERVICE GROUP)RNG(HLSC): THE RING LEAD OF A BUS CONNECTING THE ACCESS RELAYS IN A HLSC TOGETHER
(0,1)RPLY(0,1) (N,P)	1,2/9	(SERVICE GROUP)RPLY (MCU SIDE)(POLARITY): THE SERIAL CONTROL LEAD FROM THE COMDAC PACK IN A SERVICE GROUP TO THE MCU
(0,1)RSON	1,2/1	(SERVICE GROUP)RSON: THE REMOTE START FEATURE OF THE FASTECH CONVERTER
(0,1)SLCT(0,1) (N,P)	1,2/9	(SERVICE GROUP)SLCT(MCU SIDE) (POLARITY): THE SELECT LEAD FOR A PIDB FROM THE MCU TO THE COMDAC PACK IN A SERVICE GROUP
(0,1)SLG(0-9)	1/9,14,20, 26,32,38, 2/9	(SERVICE GROUP)SLG (GRID): THE SELECT LEAD FROM THE COMDAC PACK TO A GRID
(0,1)TIP(0-2)	1,2/2-4	(SERVICE GROUP)TIP(HLSC): THE TIP LEAD OF A BUS CONNECTING THE ACCESS RELAYS OF A HLSC TOGETHER
(0,1)TSA(0-7)	1,2/5-8	(SERVICE GROUP)TSA(ADDRESS LEADS): THE PCM TIME SLOT ADDRESSING LEADS FROM THE COMDAC PACK TO THE CHANNEL PACKS IN A SERVICE GROUP
(0,1)TSB(0-3) (A-D)	1,2/5-8	(SERVICE GROUP)TSB(ADDRESS LEADS)(CHANNEL PACK): THE PCM TIME SLOT ADDRESSING LEADS FROM THE COMDAC PACK TO THE CHANNEL PACKS IN A SERVICE GROUP
(0,1)256KHZ(0-9)	1/9,14,20, 26,32,38, 2/9	(SERVICE GROUP)256KHZ(GRID): THE 256KHZ CLOCK LEAD TO THE GRID PACKS FROM THE COMDAC PACK IN A SERVICE GROUP
(0,1)4MCKI(0,1) (N,P)	1,2/9	(SERVICE GROUP)4MCKI(TSIU SIDE)(POLARITY): THE 4MHZ CLOCK IN THE PIDB FROM THE TSIU FOR THE COMDAC PACK IN A SERVICE GROUP
(0,1)4MCK(0-3)	1,2/5-8	(SERVICE GROUP)4MCK(PACK): THE 4MHZ CLOCK LEAD TO THE CHANNEL PACKS FROM THE COMDAC PACK IN A SERVICE GROUP
(0,1)64KHZ	1,2/1	(SERVICE GROUP)64KHZ: THE 64KHZ SYNCHRONIZATION CLOCK LEAD FROM THE COMDAC PACK TO THE FASTECH CONVERTER IN A SERVICE GROUP
(0,1)8KSNC(0,1) (N,P)	1,2/9	(SERVICE GROUP)8KSNC(TSIU SIDE)(POLARITY): THE 8K SYNC LEAD IN THE PIDB FROM THE TSIU FOR THE COMDAC PACK IN A SERVICE GROUP

COPYRIGHT (c) 1987 AT&T
ALL RIGHTS RESERVED

LINE UNIT, MODEL 3

DWG SIZE: D2 | ISSUE: 1

AT&T BELL LABORATORIES | SD-5D180-01 | A3

APPARATUS INDEX

CODE	EQUIP LOC	FS/SYM	APP FIG.	OPTION
AJT40B	04-042	1/5	2	(W)
AJT40B	04-050	1/6	2	(W)
AJT40B	04-058	1/7	2	(W)
AJT40B	04-066	1/8	2	(W)
AJT40B	13-042	2/5	2	(W)
AJT40B	13-050	2/6	2	(W)
AJT40B	13-058	2/7	2	(W)
AJT40B	13-066	2/8	2	(W)
AJT41	04-042	1/5	2	(V)
AJT41	04-050	1/6	2	(V)
AJT41	04-058	1/7	2	(V)
AJT41	04-066	1/8	2	(V)
AJT41	13-042	2/5	2	(V)
AJT41	13-050	2/6	2	(V)
AJT41	13-058	2/7	2	(V)
AJT41	13-066	2/8	2	(V)
AJT5	04-042	1/5	2	(Y)
AJT5	04-050	1/6	2	(Y)
AJT5	04-058	1/7	2	(Y)
AJT5	04-066	1/8	2	(Y)
AJT5	13-042	2/5	2	(Y)
AJT5	13-050	2/6	2	(Y)
AJT5	13-058	2/7	2	(Y)
AJT5	13-066	2/8	2	(Y)
AJT50	04-042	1/5	2	(T)
AJT50	04-050	1/6	2	(T)
AJT50	04-058	1/7	2	(T)
AJT50	04-066	1/8	2	(T)
AJT50	13-042	2/5	2	(T)
AJT50	13-050	2/6	2	(T)
AJT50	13-058	2/7	2	(T)
AJT50	13-066	2/8	2	(T)
AJT6	04-042	1/5	2	(X)
AJT6	04-050	1/6	2	(X)
AJT6	04-058	1/7	2	(X)
AJT6	04-066	1/8	2	(X)
AJT6	13-042	2/5	2	(X)
AJT6	13-050	2/6	2	(X)
AJT6	13-058	2/7	2	(X)
AJT6	13-066	2/8	2	(X)
AJT7	04-042	1/5	2	(U)
AJT7	04-050	1/6	2	(U)
AJT7	04-058	1/7	2	(U)
AJT7	04-066	1/8	2	(U)
AJT7	13-042	2/5	2	(U)
AJT7	13-050	2/6	2	(U)
AJT7	13-058	2/7	2	(U)
AJT7	13-066	2/8	2	(U)
MC5D045A3	04-016	1/3	2	(N)
MC5D045A3	04-024	1/3	2	(N)
MC5D045A3	04-032	1/4	24	
MC5D045A3	13-016	2/2	2	(N)

APPARATUS INDEX (CONT)

CODE	EQUIP LOC	FS/SYM	APP FIG.	OPTION
MC5D045A3	13-024	2/3	2	(N)
MC5D045A3	13-032	2/4	32	
MC5X242A1	04-016	1/2	2	(M)
MC5X242A1	04-024	1/3	2	(M)
MC5X242A1	04-032	1/4	25	
MC5X242A1	13-016	2/2	2	(M)
MC5X242A1	13-024	2/3	2	(M)
MC5X242A1	13-032	2/4	33	
MC5X251A1	04-016	1/2	2	(K)
MC5X251A1	04-024	1/3	2	(K)
MC5X251A1	04-032	1/4	26	
MC5X251A1	13-016	2/2	2	(K)
MC5X251A1	13-024	2/3	2	(K)
MC5X251A1	13-032	2/4	34	
TN1048	04-100	1/14	2	(S)
TN1048	04-108	1/17	2	(S)
TN1048	04-116	1/20	2	(S)
TN1048	04-124	1/23	2	(S)
TN1048	04-132	1/26	3	
TN1048	04-140	1/29	3	
TN1048	04-148	1/32	10	
TN1048	04-156	1/35	10	
TN1048	04-164	1/38	17	
TN1048	04-172	1/41	17	
TN1048	13-100	2/14	2	(S)
TN1048	13-108	2/17	2	(S)
TN1048	13-116	2/20	2	(S)
TN1048	13-124	2/23	2	(S)
TN1048	13-132	2/26	3	
TN1048	13-140	2/29	3	
TN1048	13-148	2/32	10	
TN1048	13-156	2/35	10	
TN1048	13-164	2/38	17	
TN1048	13-172	2/41	17	
TN1058	04-100	1/14	2	(R)
TN1058	04-108	1/17	2	(R)
TN1058	04-116	1/20	2	(R)
TN1058	04-124	1/23	2	(R)
TN1058	04-132	1/26	3	
TN1058	04-140	1/29	4	
TN1058	04-148	1/32	11	
TN1058	04-156	1/35	11	
TN1058	04-164	1/38	18	
TN1058	04-172	1/41	18	
TN1058	13-100	2/14	2	(R)
TN1058	13-108	2/17	2	(R)
TN1058	13-116	2/20	2	(R)
TN1058	13-124	2/23	2	(R)
TN1058	13-132	2/26	4	
TN1058	13-140	2/29	4	
TN1058	13-148	2/32	11	
TN1058	13-156	2/35	11	

APPARATUS INDEX (CONT)

CODE	EQUIP LOC	FS/SYM	APP FIG.	OPTION
TN1058	13-164	2/38	18	
TN1058	13-172	2/41	18	
MC5X254A1	04-178	1/42	40	
MC5X254A1	13-178	2/42	41	
TN1535	04-100	1/14	2	(P)
TN1535	04-108	1/17	2	(P)
TN1535	04-116	1/20	2	(P)
TN1535	04-124	1/23	2	(P)
TN1535	04-132	1/26	6	
TN1535	04-140	1/29	6	
TN1535	04-148	1/32	13	
TN1535	04-156	1/35	13	
TN1535	04-164	1/38	20	
TN1535	04-172	1/41	20	
TN1535	13-100	2/14	2	(P)
TN1535	13-108	2/17	2	(P)
TN1535	13-116	2/20	2	(P)
TN1535	13-124	2/23	2	(P)
TN1535	13-132	2/26	6	
TN1535	13-140	2/29	6	
TN1535	13-148	2/32	13	
TN1535	13-156	2/35	13	
TN1535	13-164	2/38	20	
TN1535	13-172	2/41	20	
TN10588	04-100	1/14	2	(Q)
TN10588	04-108	1/17	2	(Q)
TN10588	04-116	1/20	2	(Q)
TN10588	04-124	1/23	2	(Q)
TN10588	04-132	1/26	5	
TN10588	04-140	1/29	5	
TN10588	04-148	1/32	12	
TN10588	04-156	1/35	12	
TN10588	04-164	1/38	19	
TN10588	04-172	1/41	19	
TN10588	13-100	2/14	2	(Q)
TN10588	13-108	2/17	2	(Q)
TN10588	13-116	2/20	2	(Q)
TN10588	13-124	2/23	2	(Q)
TN10588	13-132	2/26	5	
TN10588	13-140	2/29	5	
TN10588	13-148	2/32	12	
TN10588	13-156	2/35	12	
TN10588	13-164	2/38	19	
TN10588	13-172	2/41	19	
TN535C	04-042	1/5	2	(Z)
TN535C	04-050	1/6	2	(Z)
TN535C	04-058	1/7	2	(Z)
TN535C	04-066	1/8	2	(Z)
TN535C	13-042	2/5	2	(Z)
TN535C	13-050	2/6	2	(Z)
TN535C	13-058	2/7	2	(Z)
TN535C	13-066	2/8	2	(Z)

APPARATUS INDEX (CONT)

CODE	EQUIP LOC	FS/SYM	APP FIG.	OPTION
TN831	04-084	1/10	2	
TN831	13-084	2/10	3	
TN832	04-092	1/11	3	
TN832	13-092	2/11	2	
UN322	04-074	1/9	3	(J)
UN322	13-074	2/9	3	(J)
484GB	04-008	1/1	2	
484GB	13-008	2/1	3	
UN402	04-074	1/9	2	(G)
UN402	13-074	2/9	2	(G)

Copyright © 1987 AT&T
All Rights Reserved

LINE UNIT, MODEL 3

DWG SIZE: 8S

ISSUE: 2M

AT&T BELL LABORATORIES

SD-5D180-01

SHEET: A4

LEAD INDEX

SEE CAD 1

OPTION INDEX

APP OR WRG	RATED ON ISS	REF NOTES	LOCATION
Z	1		1/5-8,2/5-8
Y	1		1/5-8,2/5-8
X	1		1/5-8,2/5-8
W	1		1/5-8,2/5-8
V	1		1/5-8,2/5-8
U	1		1/5-8,2/5-8
T	1		1/5-8,2/5-8
S	1		1/14,17,20,23 2/14,17,20,23
R	1		1/14,17,20,23 2/14,17,20,23
Q	1		1/14,17,20,23 2/14,17,20,23
P	1		1/14,17,20,23 2/14,17,20,23
N	1		1/2,3,2/2,3
M	1		1/2,3,2/2,3
K	1		1/2,3,2/2,3

Copyright © 1987 AT&T
All Rights Reserved

LINE UNIT, MODEL 3

DWG SIZE: B5

ISSUE: 1

AT&T BELL LABORATORIES | SD-5D180-01 | SHEET: A5

PART OF FS 1 & 2

P/O COMPOSITE DIAGRAM 1

P/O CUSTOMER LINE CONCENTRATION HALF-GRIDS

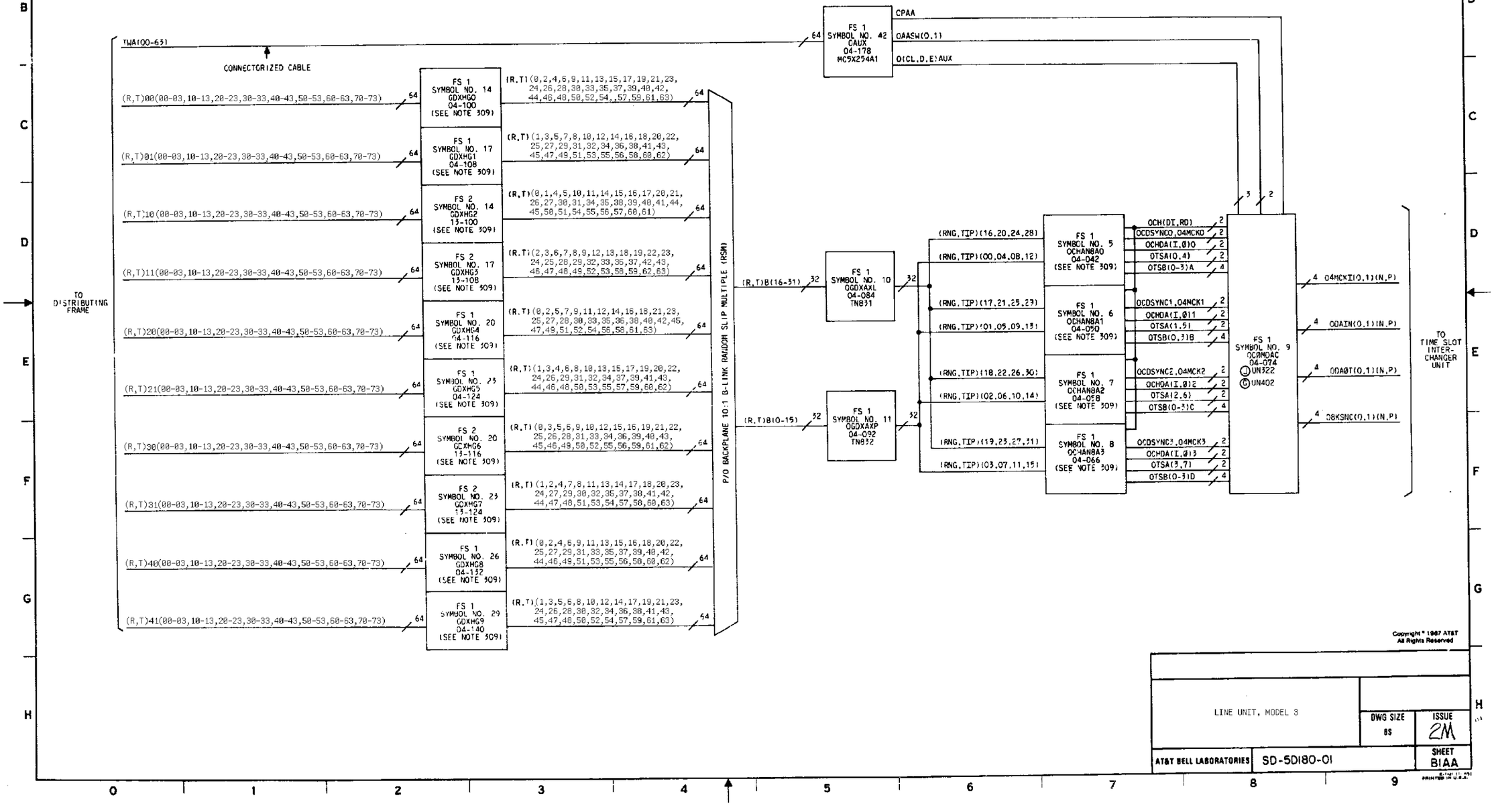

Copyright © 1987 AT&T
All Rights Reserved

LINE UNIT, MODEL 3	DWG SIZE: BS	ISSUE: 2M
AT&T BELL LABORATORIES: SD-5D180-01		SHEET: B1AA

PART OF FS 1 & 2

P/O COMPOSITE DIAGRAM 1

P/O CUSTOMER LINE CONCENTRATION HALF-CRIOS

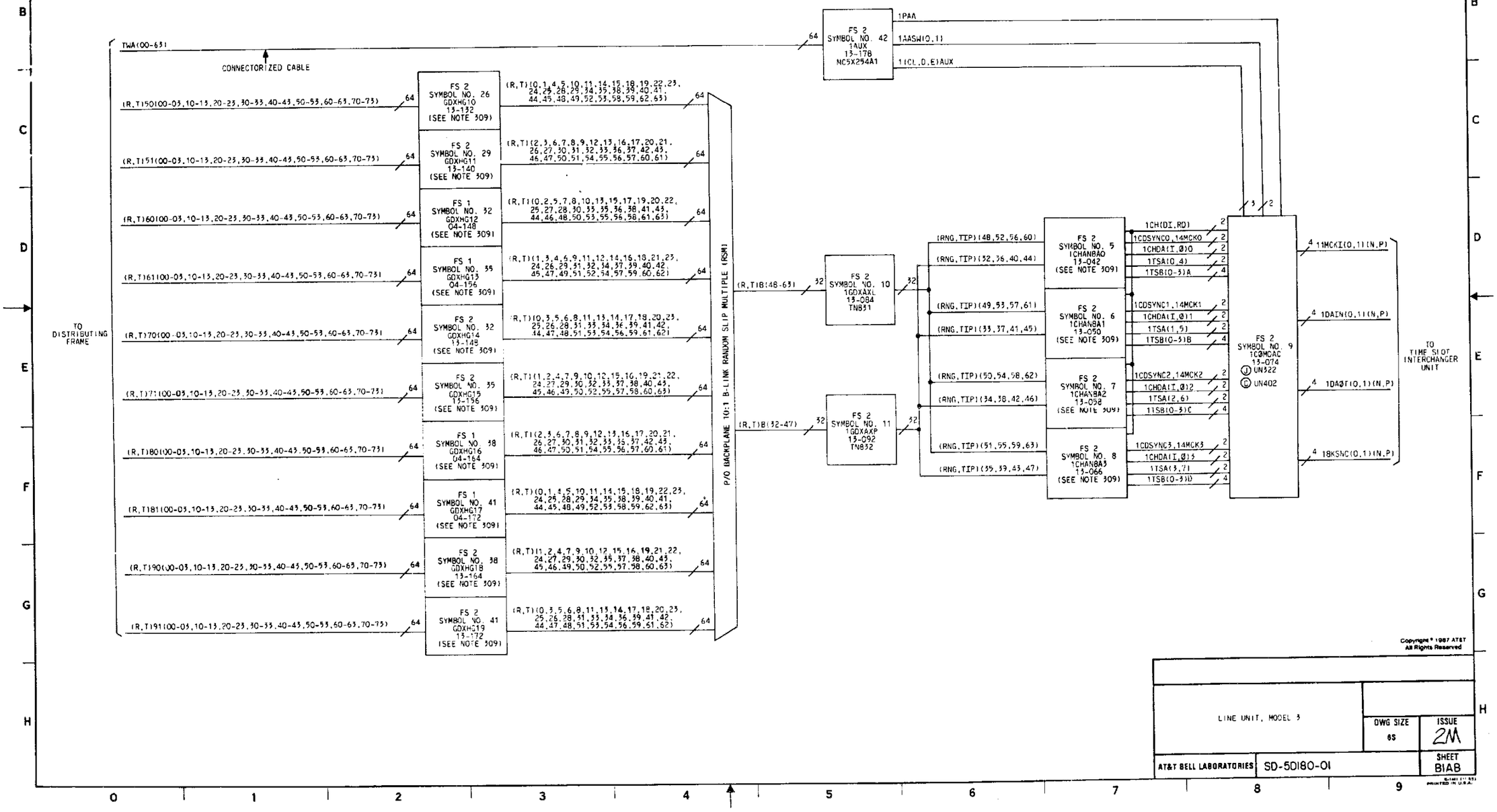

Copyright © 1987 AT&T
All Rights Reserved

LINE UNIT, MODEL 3	DWG SIZE 6S	ISSUE 2M
AT&T BELL LABORATORIES	SD-5D180-01	SHEET B1AB

PART OF FS 1 & 2

COMPOSITE DIAGRAM 2

RINGING, COIN CONTROL, TESTING
SERVICE GROUP 0,1

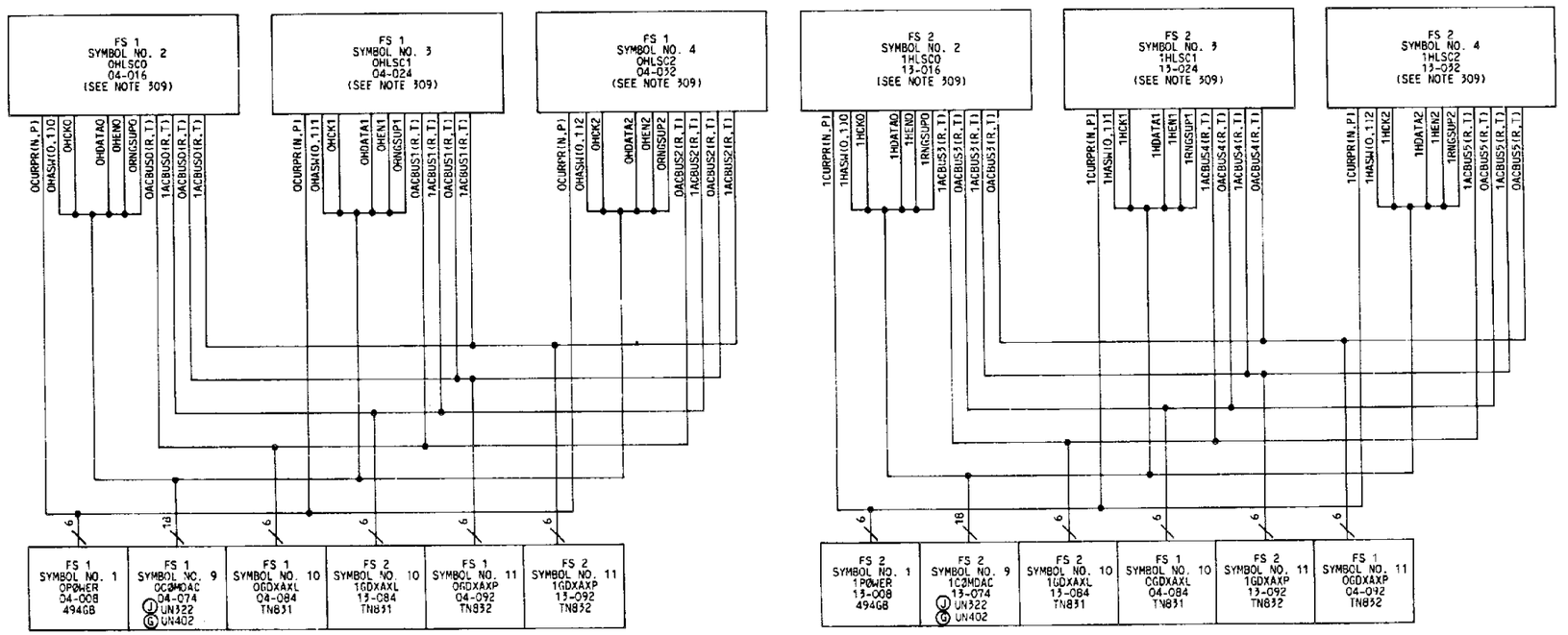

Copyright © 1987 AT&T
All Rights Reserved

LINE UNIT, MODEL 3

DWG SIZE	ISSUE
8S	2M

AT&T BELL LABORATORIES	SD-5D180-01	SHEET
		B1AC

PRINTED IN U.S.A.

PART OF FS 1 & 2
COMPOSITE DIAGRAM 3

UNIT CONTROL
(LOWER SHELF)

FS 1 SYMBOL NO. 1 OPONER 04-008 494GB

FS 1 SYMBOL NO. 2 UHLSCO 04-016 (SEE NOTE 309)

FS 1 SYMBOL NO. 3 OHLSC1 04-024 (SEE NOTE 309)

FS 1 SYMBOL NO. 4 OHLSC2 04-032 (SEE NOTE 309)

FS 1 SYMBOL NO. 5 OCHANBA0 04-042 (SEE NOTE 309)

FS 1 SYMBOL NO. 6 OCHANBA1 04-050 (SEE NOTE 309)

FS 1 SYMBOL NO. 7 OCHANBA2 04-058 (SEE NOTE 309)

FS 1 SYMBOL NO. 8 OCHANBA3 04-066 (SEE NOTE 309)

FS 1 SYMBOL NO. 10 OGDXAXL 04-084 TN831

FS 1 SYMBOL NO. 11 OGDXAXP 04-092 TME32

FS 2 SYMBOL NO. 11 1GDXAXP 13-092 TME32

TO MCU VIA PICB

FS 1 SYMBOL NO. 9 OCOMOAC 04-074 (J) UN322 (G) UN402

FS 2 SYMBOL NO. 14 GDXHG2 13-100 (SEE NOTE 309) — FS 2 SYMBOL NO. 17 GDXHG3 13-108 (SEE NOTE 309) — GRID 1

FS 2 SYMBOL NO. 20 GDXHG6 13-116 (SEE NOTE 309) — FS 2 SYMBOL NO. 23 GDXHG7 13-124 (SEE NOTE 309) — GRID 3

FS 2 SYMBOL NO. 26 GDXHG10 13-132 (SEE NOTE 309) — FS 2 SYMBOL NO. 29 GDXHG11 13-140 (SEE NOTE 309) — GRID 5

FS 2 SYMBOL NO. 32 GDXHG14 13-148 (SEE NOTE 309) — FS 2 SYMBOL NO. 35 GDXHG15 13-156 (SEE NOTE 309) — GRID 7

FS 2 SYMBOL NO. 38 GDXHG18 13-164 (SEE NOTE 309) — FS 2 SYMBOL NO. 41 GDXHG19 13-172 (SEE NOTE 309) — GRID 9

FS 1 SYMBOL NO. 14 GDXHG0 04-100 (SEE NOTE 309) — FS 1 SYMBOL NO. 17 GDXHG1 04-108 (SEE NOTE 309) — GRID 0

FS 1 SYMBOL NO. 20 GDXHG4 04-116 (SEE NOTE 309) — FS 1 SYMBOL NO. 23 GDXHG5 04-124 (SEE NOTE 309) — GRID 2

FS 1 SYMBOL NO. 26 GDXHG8 04-132 (SEE NOTE 309) — FS 1 SYMBOL NO. 29 GDXHG9 04-140 (SEE NOTE 309) — GRID 4

FS 1 SYMBOL NO. 32 GDXHG12 04-148 (SEE NOTE 309) — FS 1 SYMBOL NO. 35 GDXHG13 04-156 (SEE NOTE 309) — GRID 6

FS 1 SYMBOL NO. 38 GDXHG16 04-164 (SEE NOTE 309) — FS 1 SYMBOL NO. 41 GDXHG17 04-172 (SEE NOTE 309) — GRID 8

Copyright © 1987 AT&T
All Rights Reserved

LINE UNIT, MODEL 3

DWG SIZE	ISSUE
8S	2M

AT&T BELL LABORATORIES | SD-5D180-01 | SHEET B1AD

PRINTED IN U.S.A.

PART OF FS 1 & 2

COMPOSITE DIAGRAM 4

UNIT CONTROL
(UPPER SHELF)

FS 2 SYMBOL NO. 1 1POWER 13-008 494GB

FS 2 SYMBOL NO. 2 1HLSC0 13-016 (SEE NOTE 309)

FS 2 SYMBOL NO. 3 1HLSC1 13-024 (SEE NOTE 309)

FS 2 SYMBOL NO. 4 1HLSC2 13-032 (SEE NOTE 309)

FS 2 SYMBOL NO. 5 1CHANBA0 13-042 (SEE NOTE 309)

FS 2 SYMBOL NO. 6 1CHANBA1 13-050 (SEE NOTE 309)

FS 2 SYMBOL NO. 7 1CHANBA2 13-058 (SEE NOTE 309)

FS 2 SYMBOL NO. 8 1CHANBA3 13-066 (SEE NOTE 309)

FS 2 SYMBOL NO. 10 1GDXAXL 13-084 TN831

FS 2 SYMBOL NO. 11 1GDXAXP 13-092 TN832

FS 1 SYMBOL NO. 11 0GDXAXP 04-092 TN832

TO MCU VIA PICB

FS 2 SYMBOL NO. 9 1COMDAC 13-074
J UN322
P UN402

FS 2 SYMBOL NO. 14 GDXHG2 13-100 (SEE NOTE 309) — GRID 1

FS 2 SYMBOL NO. 17 GDXHG3 13-108 (SEE NOTE 309)

FS 1 SYMBOL NO. 14 GDXHG0 04-100 (SEE NOTE 309) — GRID 0

FS 1 SYMBOL NO. 17 GDXHG1 04-108 (SEE NOTE 309)

FS 2 SYMBOL NO. 20 GDXHG6 13-116 (SEE NOTE 309) — GRID 3

FS 2 SYMBOL NO. 23 GDXHG7 13-124 (SEE NOTE 309)

FS 1 SYMBOL NO. 20 GDXHG4 04-116 (SEE NOTE 309) — GRID 2

FS 1 SYMBOL NO. 23 GDXHG5 04-124 (SEE NOTE 309)

FS 2 SYMBOL NO. 26 GDXHG10 13-132 (SEE NOTE 309) — GRID 5

FS 2 SYMBOL NO. 29 GDXHG11 13-140 (SEE NOTE 309)

FS 1 SYMBOL NO. 26 GDXHG8 04-132 (SEE NOTE 309) — GRID 4

FS 1 SYMBOL NO. 29 GDXHG9 04-140 (SEE NOTE 309)

FS 2 SYMBOL NO. 32 GDXHG14 13-148 (SEE NOTE 309) — GRID 7

FS 2 SYMBOL NO. 35 GDXHG15 13-156 (SEE NOTE 309)

FS 1 SYMBOL NO. 32 GDXHG12 04-148 (SEE NOTE 309) — GRID 6

FS 1 SYMBOL NO. 35 GDXHG13 04-156 (SEE NOTE 309)

FS 2 SYMBOL NO. 38 GDXHG18 13-164 (SEE NOTE 309) — GRID 9

FS 2 SYMBOL NO. 41 GDXHG19 13-172 (SEE NOTE 309)

FS 1 SYMBOL NO. 38 GDXHG16 04-164 (SEE NOTE 309) — GRID 8

FS 1 SYMBOL NO. 41 GDXHG17 04-172 (SEE NOTE 309)

Copyright © 1987 AT&T
All Rights Reserved

LINE UNIT, MODEL 5

DWG SIZE 6S

ISSUE 2M

AT&T BELL LABORATORIES

SD-50180-01

SHEET B1AE

PRINTED IN U.S.A.

PART OF FS 1 & 2

COMPOSITE DIAGRAM 5

POWER

FROM FUSE PANEL
-48V00
-48V01
-48V02
-48V03
-48V04
-48V05
-48V06
-48V10
-48V11
-48V12
-48V13
-48V14
-48V15
-48V16

-48V10
-48V11
-5V1
+5V13
+5V04
-5V0

FS 2 SYMBOL NO. 1 1PØWER 13-008 494GB
FS 2 SYMBOL NO. 2 1HLSC0 13-016 (SEE NOTE 309)
FS 2 SYMBOL NO. 3 1HLSC1 13-024 (SEE NOTE 309)
FS 2 SYMBOL NO. 4 1HLSC2 13-032 (SEE NOTE 309)
FS 2 SYMBOL NO. 5 1CHANBA0 13-042 (SEE NOTE 309)
FS 2 SYMBOL NO. 6 1CHANBA1 13-050 (SEE NOTE 309)
FS 2 SYMBOL NO. 7 1CHANBA2 13-058 (SEE NOTE 309)
FS 2 SYMBOL NO. 8 1CHANBA3 13-066 (SEE NOTE 309)
FS 2 SYMBOL NO. 9 1CØMDAC 13-074 J UN322 G UN402
FS 2 SYMBOL NO. 10 1GDXAXL 13-084 TN831
+5V1
+26ØV1
+295V1
+297V1
+300VR1
FS 2 SYMBOL NO. 11 1GDXAXP 13-092 TN832

FS 2 SYMBOL NO. 14 GDXHG2 13-100 (SEE NOTE 309)
FS 2 SYMBOL NO. 17 GDXHG3 13-108 (SEE NOTE 309)
FS 2 SYMBOL NO. 20 GDXHG6 13-116 (SEE NOTE 309)
FS 2 SYMBOL NO. 23 GDXHG7 13-124 (SEE NOTE 309)
FS 2 SYMBOL NO. 26 GDXHG10 13-132 (SEE NOTE 309)
FS 2 SYMBOL NO. 29 GDXHG11 13-140 (SEE NOTE 309)
FS 2 SYMBOL NO. 32 GDXHG14 13-148 (SEE NOTE 309)
FS 2 SYMBOL NO. 35 GDXHG15 13-156 (SEE NOTE 309)
FS 2 SYMBOL NO. 38 GDXHG18 13-164 (SEE NOTE 309)
FS 2 SYMBOL NO. 41 GDXHG19 13-172 (SEE NOTE 309)
-48V10
FS 2 SYMBOL NO. 42 1AUX 13-178 MC5X254A1

+300V00 +300V01 +300V02 +300V03 +300V04 +300V05 +300V06 +300V07 +300V08 +300V09 +300V10 +300V11 +300V12 +300V13 +300V14 +300V15 +300V16 +300V17 +300V18 +300V19 +300VSG0 +300VSG1

FS 1 SYMBOL NO. 14 GDXHG4 04-100 (SEE NOTE 309)
FS 1 SYMBOL NO. 17 GDXHG1 04-108 (SEE NOTE 309)
FS 1 SYMBOL NO. 20 GDXHG4 04-116 (SEE NOTE 309)
FS 1 SYMBOL NO. 23 GDXHG5 04-124 (SEE NOTE 309)
FS 1 SYMBOL NO. 26 GDXHG8 04-132 (SEE NOTE 309)
FS 1 SYMBOL NO. 29 GDXHG9 04-140 (SEE NOTE 309)
FS 1 SYMBOL NO. 32 GDXHG12 04-148 (SEE NOTE 309)
FS 1 SYMBOL NO. 35 GDXHG13 04-156 (SEE NOTE 309)
FS 1 SYMBOL NO. 38 GDXHG16 04-164 (SEE NOTE 309)
FS 1 SYMBOL NO. 41 GDXHG17 04-172 (SEE NOTE 309)
-48V00
FS 1 SYMBOL NO. 42 QAUX 04-176 MC5X254A1

-48V02
-48V03
-48V04
-48V05
-48V06

FS 1 SYMBOL NO. 1 OPØWER 04-008 494GB
FS 1 SYMBOL NO. 2 OHLSC0 04-016 (SEE NOTE 309)
FS 1 SYMBOL NO. 3 OHLSC1 04-024 (SEE NOTE 309)
FS 1 SYMBOL NO. 4 OHLSC2 04-032 (SEE NOTE 309)
FS 1 SYMBOL NO. 5 OCHANBA0 04-042 (SEE NOTE 309)
FS 1 SYMBOL NO. 6 OCHANBA1 04-050 (SEE NOTE 309)
FS 1 SYMBOL NO. 7 OCHANBA2 04-058 (SEE NOTE 309)
FS 1 SYMBOL NO. 8 OCHANBA3 04-066 (SEE NOTE 309)
FS 1 SYMBOL NO. 9 OCØMDAC 04-074 J UN322 G UN402
FS 1 SYMBOL NO. 10 OGDXAXL 04-084 TN831
+5V0
+26ØV0
+295V0
+297V0
+300VR0
FS 1 SYMBOL NO. 11 OGDXAXP 04-092 TN832

-48V00
-48V01

Copyright © 1987 AT&T
All Rights Reserved

LINE UNIT, MODEL 3		DWG SIZE 6S	ISSUE 2M
AT&T BELL LABORATORIES	SD-5D180-01		SHEET B1AF

E-7487 (11-87)
PRINTED IN U.S.A.

PART OF FS 1

LU3 LOWER SHELF

SYMBOL NO. 1

SERVICE GROUP POWER

DESIG	EQPT LOC	CODE	ELEM IDENT	OPT
0POWER	04-008	494GB	A	

LEAD DESIG	FUNC	TERM. MOD	TERM.	TERM. OPT	DESTINATION	NOTE
+5V04	IO		018		1/1	
	IO		044		1/1	
	IO		045		1/1	
	IO		046		1/1	
	IO		047		1/1	
	IO		048		1/1	
	IO		049		1/1	
	IO		050		1/1	
	IO		051		1/1	
	IO		052		1/1	
	IO		053		1/1	
	IO		054		1/1	
	IO		056		1/1	
	IO		118		1/1	
	IO		144		1/1	
	IO		145		1/1	
	IO		146		1/1	
	IO		147		1/1	
	IO		148		1/1	
	IO		149		1/1	
	IO		150		1/1	
	IO		151		1/1	
	IO		152		1/1	
	IO		153		1/1	
	IO		154		1/1	
	IO		155		1/1	
	IO		156		1/1	
	IO		055		1/2,1/3 1/4,1/5 1/6,1/7 1/8,1/9 1/11,1/14 1/17,1/20 1/23,1/26 1/29,1/32 1/35,1/38 1/41,1/42 2/1,2/14 2/17,2/20 2/23,2/26 2/29,2/32 2/35,2/38 2/41	
+5V13	IO		015		1/14,1/17 1/20,1/23 1/26,1/29 1/32,1/35 1/38,1/41 2/1,2/2 2/3,2/4 2/5,2/6 2/7,2/8 2/9,2/11 2/14,2/17 2/20,2/23 2/26,2/29 2/32,2/35 2/38,2/41 2/42	
-48RTN0C	GRD		115		2/9	
-48V00	PWR		006		1/1	
	PWR		007		1/1	
	PWR		008		1/1	
	PWR		106		1/1	
	PWR		107		1/1	
	PWR		108		1/2,1/3 1/4,1/44 1/45	

SYMBOL NO. 1 (CONT)

SERVICE GROUP POWER

DESIG	EQPT LOC	CODE	ELEM IDENT	OPT
0POWER	04-008	494GB	A	

LEAD DESIG	FUNC	TERM. MOD	TERM.	TERM. OPT	DESTINATION	NOTE
-5V0	IO		022		1/1	
	IO		122		1/1	
	IO		023		1/2,1/3 1/4,1/5 1/6,1/7 1/8,1/42	
FGRD	IO		000		1/1	
	IO		001		1/1	
	IO		100		1/1	
	IO		101		1/9,2/1 2/9	
GRD04008	GRD		003			
	GRD		004			
	GRD		005			
	GRD		024			
	GRD		032			
	GRD		033			
	GRD		034			
	GRD		035			
	GRD		036			
	GRD		037			
	GRD		038			
	GRD		039			
	GRD		040			
	GRD		041			
	GRD		042			
	GRD		043			
	GRD		102			
	GRD		103			
	GRD		104			
	GRD		119			
	GRD		123			
	GRD		124			
	GRD		132			
	GRD		133			
	GRD		134			
	GRD		135			
	GRD		136			
	GRD		137			
	GRD		138			
	GRD		139			
	GRD		140			
	GRD		141			
	GRD		142			
	GRD		143			
0CURPRN	IO		117		1/2,1/3 1/4,1/5 1/6,1/7 1/8,1/9 1/42	
0CURPRP	IO		017		1/2,1/3 1/4,1/5 1/6,1/7 1/8,1/9 1/42	
0RSDN	IO		109			
	IO		110			
064KHZ	IO		120		1/9	

SYMBOL NO. 2

SERVICE CIRCUIT

DESIG	EQPT LOC	CODE	ELEM IDENT	OPT
0HLSC0	04-016	SEE NOTE 309	A	

LEAD DESIG	FUNC	TERM. MOD	TERM.	TERM. OPT	DESTINATION	NOTE
+5V04	IO		034		1/1	
	IO		035		1/1	
	IO		134		1/1	
	IO		135		1/1	
-48V00	PWR		000		1/1	
	PWR		001		1/1	
	PWR		002		1/1	
	PWR		100		1/1	
	PWR		101		1/1	
	PWR		102		1/1	
-5V0	IO		032		1/1	
	IO		132		1/1	
GRD04016	GRD		014			
	GRD		015			
	GRD		016			
	GRD		019			
	GRD		114			
	GRD		115			
	GRD		116			
	GRD		119			
	GRD		200			
	GRD		201			
	GRD		219			
	GRD		224			
	GRD		232			
	GRD		234			
	GRD		235			
	GRD		300			
	GRD		301			
	GRD		319			
	GRD		324			
	GRD		332			
	GRD		334			
	GRD		335			
0ACBUS0R	IO		348		1/10,1/11	
0ACBUS0T	IO		248		1/10,1/11	
0CURPRN	IO		012		1/1	
0CURPRP	IO		112		1/1	
0HASW00	IO		323		1/9	
0HASW10	IO		223		1/9	
0HCK0	IO		320		1/9	
0HDATA0	IO		321		1/9	
0HDATA00	IO		318			
	IO		322			
0HDCK0	IO		311			
	IO		313			
0HDW0	IO		215			
	IO		216			
0HEN0	IO		220		1/9	
0HEN00	IO		315			
	IO		316			
0HR0	IO		312			
	IO		314			
0HW0	IO		213			
	IO		214			
0RNGSUP0	IO		317		1/9	
0RNG0	IO		245			
	IO		246			
	IO		250			
0TIP0	IO		345			

SYMBOL NO. 2 (CONT)

SERVICE CIRCUIT

DESIG	EQPT LOC	CODE	ELEM IDENT	OPT
0HLSC0	04-016	SEE NOTE 309	A	

LEAD DESIG	FUNC	TERM. MOD	TERM.	TERM. OPT	DESTINATION	NOTE
	IO		346			
	IO		350			
1ACBUS0R	IO		347		2/10,2/11	
1ACBUS0T	IO		247		2/10,2/11	

PART OF FS 1
SYMBOL(S) 1 2

COPYRIGHT (c) 1987 AT&T
ALL RIGHTS RESERVED

LINE UNIT, MODEL 3

DWG SIZE: C2

ISSUE: 1

AT&T BELL LABORATORIES

SD-5D180-01

B1CA

PART OF FS 1

LU3 LOWER SHELF

SYMBOL NO. 3

SERVICE CIRCUIT

DESIG	EQPT LOC	CODE	ELEM IDENT	OPT
OHLSC1	04-024	SEE NOTE 309	A	

LEAD DESIG	FUNC	TERM. MOD	TERM.	TERM. OPT	DESTINATION	NOTE
+5V04	IO		034		1/1	
	IO		035		1/1	
	IO		134		1/1	
	IO		135		1/1	
-48V00	PWR		000		1/1	
	PWR		001		1/1	
	PWR		002		1/1	
	PWR		100		1/1	
	PWR		101		1/1	
	PWR		102		1/1	
-5V0	IO		032		1/1	
	IO		132		1/1	
GRD04024	GRD		014			
	GRD		015			
	GRD		016			
	GRD		019			
	GRD		114			
	GRD		115			
	GRD		116			
	GRD		119			
	GRD		200			
	GRD		201			
	GRD		219			
	GRD		224			
	GRD		232			
	GRD		234			
	GRD		235			
	GRD		300			
	GRD		301			
	GRD		319			
	GRD		324			
	GRD		332			
	GRD		334			
	GRD		335			
OACBUS1R	IO		348		1/10,1/11	
OACBUS1T	IO		248		1/10,1/11	
OCURPRN	IO		012		1/1	
OCURPRP	IO		112		1/1	
OHASW01	IO		323		1/9	
OHASW11	IO		223		1/9	
OHCK1	IO		320		1/9	
OHDATA1	IO		321		1/9	
OHDATA10	IO		318			
	IO		322			
OHDCK1	IO		311			
OHDW1	IO		313			
	IO		215			
	IO		216			
OHEN1	IO		220		1/9	
OHEN10	IO		315			
	IO		316			
OHR1	IO		312			
	IO		314			
OHW1	IO		213			
	IO		214			
ORNGSUP1	IO		317		1/9	
ORNG1	IO		245			
	IO		246			
	IO		250			
OTIP1	IO		345			

SYMBOL NO. 3 (CONT)

SERVICE CIRCUIT

DESIG	EQPT LOC	CODE	ELEM IDENT	OPT
OHLSC1	04-024	SEE NOTE 309	A	

LEAD DESIG	FUNC	TERM. MOD	TERM.	TERM. OPT	DESTINATION	NOTE
	IO		346			
	IO		350			
1ACBUS1R	IO		347		2/10,2/11	
1ACBUS1T	IO		247		2/10,2/11	

SYMBOL NO. 4

SERVICE CIRCUIT

DESIG	EQPT LOC	CODE	ELEM IDENT	OPT
OHLSC2	04-032	SEE NOTE 309	A	

LEAD DESIG	FUNC	TERM. MOD	TERM.	TERM. OPT	DESTINATION	NOTE
+5V04	IO		034		1/1	
	IO		035		1/1	
	IO		134		1/1	
	IO		135		1/1	
-48V00	PWR		000		1/1	
	PWR		001		1/1	
	PWR		002		1/1	
	PWR		100		1/1	
	PWR		101		1/1	
	PWR		102		1/1	
-5V0	IO		032		1/1	
	IO		132		1/1	
GRD04032	GRD		014			
	GRD		015			
	GRD		016			
	GRD		019			
	GRD		114			
	GRD		115			
	GRD		116			
	GRD		119			
	GRD		200			
	GRD		201			
	GRD		219			
	GRD		224			
	GRD		232			
	GRD		234			
	GRD		235			
	GRD		300			
	GRD		301			
	GRD		319			
	GRD		324			
	GRD		332			
	GRD		334			
	GRD		335			
OACBUS2R	IO		348		1/10,1/11	
OACBUS2T	IO		248		1/10,1/11	
OCURPRN	IO		012		1/1	
OCURPRP	IO		112		1/1	
OHASW02	IO		323		1/9	
OHASW12	IO		223		1/9	
OHCK2	IO		320		1/9	
OHDATA2	IO		321		1/9	

SYMBOL NO. 4 (CONT)

SERVICE CIRCUIT

DESIG	EQPT LOC	CODE	ELEM IDENT	OPT
OHLSC2	04-032	SEE NOTE 309	A	

LEAD DESIG	FUNC	TERM. MOD	TERM.	TERM. OPT	DESTINATION	NOTE
OHDATA20	IO		318			
	IO		322			
OHDCK2	IO		311			
	IO		313			
OHDW2	IO		215			
	IO		216			
OHEN2	IO		220		1/9	
OHEN20	IO		315			
	IO		316			
OHR2	IO		312			
	IO		314			
OHW2	IO		213			
	IO		214			
ORNGSUP2	IO		317		1/9	
ORNG2	IO		245			
	IO		246			
	IO		250			
OTIP2	IO		345			
	IO		346			
	IO		350			
1ACBUS2R	IO		347		2/10,2/11	
1ACBUS2T	IO		247		2/10,2/11	

SYMBOL NO. 5

CHANNEL CIRCUIT

DESIG	EQPT LOC	CODE	ELEM IDENT	OPT
OCHAN8A0	04-042	SEE NOTE 309	A	

LEAD DESIG	FUNC	TERM. MOD	TERM.	TERM. OPT	DESTINATION	NOTE
+5V04	IO		032		1/1	
	IO		034		1/1	
	IO		035		1/1	
	IO		132		1/1	
	IO		134		1/1	
	IO		135		1/1	
-48V01	PWR		000		1/5	
	PWR		001		1/5	
	PWR		004		1/5	
	PWR		100		1/5	
	PWR		101		1/5	
	PWR		204		1/5	
	PWR		304		1/5	
	PWR		104		1/6,1/7 1/8,1/9 1/10,1/11 1/47	
-5V0	IO		024		1/1	
	IO		124		1/1	
GRD04042	GRD		136			
	GRD		200			
	GRD		201			
	GRD		224			
	GRD		232			

SYMBOL NO. 5 (CONT)

CHANNEL CIRCUIT

DESIG	EQPT LOC	CODE	ELEM IDENT	OPT
OCHAN8A0	04-042	SEE NOTE 309	A	

LEAD DESIG	FUNC	TERM. MOD	TERM.	TERM. OPT	DESTINATION	NOTE
	GRD		234			
	GRD		235			
	GRD		300			
	GRD		301			
	GRD		324			
	GRD		332			
	GRD		334			
	GRD		335			
RNG00	IO		256		1/11	
RNG04	IO		056		1/11	
RNG08	IO		255		1/11	
RNG12	IO		055		1/11	
RNG16	IO		202		1/10	
RNG20	IO		002		1/10	
RNG24	IO		203		1/10	
RNG28	IO		003		1/10	
TIP00	IO		356		1/11	
TIP04	IO		156		1/11	
TIP08	IO		355		1/11	
TIP12	IO		155		1/11	
TIP16	IO		302		1/10	
TIP20	IO		102		1/10	
TIP24	IO		303		1/10	
TIP28	IO		103		1/10	
OCASH00	IO		019		1/5	
	IO		118		1/9	
OCASH10	IO		020			
	IO		041			
OCA0	IO		315		1/5	
	IO		341		1/9	
OCA4	IO		216		1/5	
	IO		241		1/9	
OCB0	IO		242		1/6,1/7 1/8,1/9	
OCB1	IO		342		1/6,1/7 1/8,1/9	
OCB2	IO		316		1/6,1/7 1/8,1/9	
OCB3	IO		217		1/6,1/7 1/8,1/9	
OCDSCLK	IO		244		1/5	
	IO		318		1/6,1/7 1/8,1/9	
OCDSYNCO	IO		123		1/5	
	IO		238		1/9	
OCDW	IO		317		1/5	
	IO		243		1/6,1/7 1/8,1/9	
OCHDAI0	IO		320		1/5	
	IO		339		1/9	
OCHDAO0	IO		036		1/5	

PART OF FS 1

SYMBOL(S) 3 4 5

COPYRIGHT (c) 1987 AT&T
ALL RIGHTS RESERVED

LINE UNIT, MODEL 3

DWG SIZE: D2

ISSUE: 1

AT&T BELL LABORATORIES

SD-5D180-01

B1CB

PART OF FS 1

LU3 LOWER SHELF

SYMBOL NO. 5 (CONT)

CHANNEL CIRCUIT

DESIG	EQPT LOC	CODE	ELEM IDENT	OPT
0CHAN8A0	04-042	SEE NOTE 309	A	

LEAD DESIG	FUNC	TERM. MOD	TERM.	TERM. OPT	DESTINATION	NOTE
	IO		220		1/9	
0CHDI	IO		017		1/6,1/7	
					1/8,1/9	
0CHRD	IO		016		1/6,1/7	
					1/8,1/9	
0CURPRN	IO		012		1/1	
0CURPRP	IO		112		1/1	
0CW2	IO		218		1/5	
	IO		343		1/6,1/7	
					1/8,1/9	
0TSA0	IO		139		1/9	
	IO		222		1/5	
0TSA4	IO		236		1/5	
	IO		321		1/9	
0TSB0A	IO		221		1/9	
	IO		336		1/5	
0TSB1A	IO		239		1/9	
0TSB2A	IO		322		1/5	
	IO		338		1/9	
0TSB3A	IO		223		1/9	
04MCK0	IO		323		1/5	
	IO		337		1/9	

SYMBOL NO. 6

CHANNEL CIRCUIT

DESIG	EQPT LOC	CODE	ELEM IDENT	OPT
0CHAN8A1	04-050	SEE NOTE 309	A	

LEAD DESIG	FUNC	TERM. MOD	TERM.	TERM. OPT	DESTINATION	NOTE
+5V04	IO		032		1/1	
	IO		034		1/1	
	IO		035		1/1	
	IO		132		1/1	
	IO		134		1/1	
	IO		135		1/1	
-48V01	PWR		000		1/5	
	PWR		001		1/5	
	PWR		004		1/5	
	PWR		100		1/5	
	PWR		101		1/5	
	PWR		104		1/5	
	PWR		204		1/5	
	PWR		304		1/5	
-5V0	IO		024		1/1	
	IO		124		1/1	
GRD04050	GRD		136			
	GRD		200			
	GRD		201			
	GRD		224			
	GRD		232			
	GRD		234			
	GRD		235			
	GRD		300			

SYMBOL NO. 6 (CONT)

CHANNEL CIRCUIT

DESIG	EQPT LOC	CODE	ELEM IDENT	OPT
0CHAN8A1	04-050	SEE NOTE 309	A	

LEAD DESIG	FUNC	TERM. MOD	TERM.	TERM. OPT	DESTINATION	NOTE
	GRD		301			
	GRD		324			
	GRD		332			
	GRD		334			
	GRD		335			
RNG01	IO		256		1/11	
RNG05	IO		056		1/11	
RNG09	IO		255		1/11	
RNG13	IO		055		1/11	
RNG17	IO		202		1/10	
RNG21	IO		002		1/10	
RNG25	IO		203		1/10	
RNG29	IO		003		1/10	
TIP01	IO		356		1/11	
TIP05	IO		156		1/11	
TIP09	IO		355		1/11	
TIP13	IO		155		1/11	
TIP17	IO		302		1/10	
TIP21	IO		102		1/10	
TIP25	IO		303		1/10	
TIP29	IO		103		1/10	
0CASW01	IO		019			
	IO		118			
0CASW11	IO		020		1/9	
	IO		041		1/6	
0CA1	IO		315		1/9	
	IO		341		1/6	
0CA5	IO		216		1/9	
	IO		241		1/6	
0CB0	IO		242		1/5	
0CB1	IO		342		1/5	
0CB2	IO		316		1/5	
0CB3	IO		217		1/5	
0CDSCLK	IO		244		1/5	
0CDSYNC1	IO		123		1/6	
	IO		238		1/9	
0CDW	IO		243		1/5	
	IO		317		1/5	
0CHDA11	IO		320		1/9	
	IO		339		1/6	
0CHDA01	IO		036		1/9	
	IO		220		1/6	
0CHDI	IO		017		1/5	
0CHRD	IO		016		1/5	
0CURPRN	IO		012		1/1	
0CURPRP	IO		112		1/1	
0CW2	IO		218		1/5	
	IO		343		1/5	
0TSA1	IO		139		1/6	
	IO		222		1/9	
0TSA5	IO		236		1/6	
	IO		321		1/9	
0TSB0B	IO		221		1/9	
	IO		336		1/6	
0TSB1B	IO		239		1/9	
0TSB2B	IO		322		1/6	
	IO		338		1/9	
0TSB3B	IO		223		1/9	
04MCK1	IO		323		1/6	

SYMBOL NO. 6 (CONT)

CHANNEL CIRCUIT

DESIG	EQPT LOC	CODE	ELEM IDENT	OPT
0CHAN8A1	04-050	SEE NOTE 309	A	

LEAD DESIG	FUNC	TERM. MOD	TERM.	TERM. OPT	DESTINATION	NOTE
	IO		337		1/9	

SYMBOL NO. 7

CHANNEL CIRCUIT

DESIG	EQPT LOC	CODE	ELEM IDENT	OPT
0CHAN8A2	04-058	SEE NOTE 309	A	

LEAD DESIG	FUNC	TERM. MOD	TERM.	TERM. OPT	DESTINATION	NOTE
+5V04	IO		032		1/1	
	IO		034		1/1	
	IO		035		1/1	
	IO		132		1/1	
	IO		134		1/1	
	IO		135		1/1	
-48V01	PWR		000		1/5	
	PWR		001		1/5	
	PWR		004		1/5	
	PWR		100		1/5	
	PWR		101		1/5	
	PWR		104		1/5	
	PWR		204		1/5	
	PWR		304		1/5	
-5V0	IO		024		1/1	
	IO		124		1/1	
GRD04058	GRD		136			
	GRD		200			
	GRD		201			
	GRD		224			
	GRD		232			
	GRD		234			
	GRD		235			
	GRD		300			
	GRD		301			
	GRD		324			
	GRD		332			
	GRD		334			
	GRD		335			
RNG02	IO		256		1/11	
RNG06	IO		056		1/11	
RNG10	IO		255		1/11	
RNG14	IO		055		1/11	
RNG18	IO		202		1/10	
RNG22	IO		002		1/10	
RNG26	IO		203		1/10	
RNG30	IO		003		1/10	
TIP02	IO		356		1/11	
TIP06	IO		156		1/11	
TIP10	IO		355		1/11	
TIP14	IO		155		1/11	
TIP18	IO		302		1/10	
TIP22	IO		102		1/10	
TIP26	IO		303		1/10	
TIP30	IO		103		1/10	

SYMBOL NO. 7 (CONT)

CHANNEL CIRCUIT

DESIG	EQPT LOC	CODE	ELEM IDENT	OPT
0CHAN8A2	04-058	SEE NOTE 309	A	

LEAD DESIG	FUNC	TERM. MOD	TERM.	TERM. OPT	DESTINATION	NOTE
0CASW02	IO		019		1/9	
	IO		118		1/7	
0CASW12	IO		020			
	IO		041			
0CA2	IO		315		1/9	
	IO		341		1/7	
0CA6	IO		216		1/9	
	IO		241		1/7	
0CB0	IO		242		1/5	
0CB1	IO		342		1/5	
0CB2	IO		316		1/5	
0CB3	IO		217		1/5	
0CDSCLK	IO		244		1/5	
	IO		318		1/5	
0CDSYNC2	IO		123		1/7	
	IO		238		1/9	
0CDW	IO		243		1/5	
	IO		317		1/5	
0CHDA12	IO		320		1/9	
	IO		339		1/7	
0CHDA02	IO		036		1/9	
	IO		220		1/7	
0CHDI	IO		017		1/5	
0CHRD	IO		016		1/5	
0CURPRN	IO		012		1/1	
0CURPRP	IO		112		1/1	
0CW2	IO		218		1/5	
	IO		343		1/5	
0TSA2	IO		139		1/9	
	IO		222		1/7	
0TSA6	IO		236		1/9	
	IO		321		1/7	
0TSB0C	IO		221		1/7	
	IO		336		1/9	
0TSB1C	IO		239		1/9	
0TSB2C	IO		322		1/9	
	IO		338		1/7	
0TSB3C	IO		223		1/9	
04MCK2	IO		323		1/7	
	IO		337		1/9	

PART OF FS 1

SYMBOL(S) 5 6 7

COPYRIGHT (C) 1987 AT&T
ALL RIGHTS RESERVED

LINE UNIT, MODEL 3

DWG SIZE	ISSUE
C2	1

AT&T BELL LABORATORIES	SD-5D180-01	B1CC

PART OF FS 1

LU3 LOWER SHELF

SYMBOL NO. 8

CHANNEL CIRCUIT

DESIG	EQPT LOC	CODE	ELEM IDENT	OPT
0CHAN8A3	04-066	SEE NOTE 309	A	

LEAD DESIG	FUNC	TERM. MOD	TERM.	TERM. OPT	DESTINATION	NOTE
+5V04	IO		032		1/1	
	IO		034		1/1	
	IO		035		1/1	
	IO		132		1/1	
	IO		134		1/1	
	IO		135		1/1	
-48V01	PWR		000		1/5	
	PWR		001		1/5	
	PWR		004		1/5	
	PWR		100		1/5	
	PWR		101		1/5	
	PWR		104		1/5	
	PWR		204		1/5	
	PWR		304		1/5	
-5V0	IO		024		1/1	
	IO		124		1/1	
GRD04066	GRD		136			
	GRD		200			
	GRD		201			
	GRD		224			
	GRD		232			
	GRD		234			
	GRD		235			
	GRD		300			
	GRD		301			
	GRD		324			
	GRD		332			
	GRD		334			
	GRD		334			
RNG03	IO		256		1/11	
RNG07	IO		056		1/11	
RNG11	IO		255		1/11	
RNG15	IO		055		1/11	
RNG19	IO		202		1/10	
RNG23	IO		002		1/10	
RNG27	IO		203		1/10	
RNG31	IO		003		1/10	
TIP03	IO		356		1/11	
TIP07	IO		156		1/11	
TIP11	IO		355		1/11	
TIP15	IO		155		1/11	
TIP19	IO		302		1/10	
TIP23	IO		102		1/10	
TIP27	IO		303		1/10	
TIP31	IO		103		1/10	
0CASW03	IO		019			
	IO		116			
0CASW13	IO		020		1/9	
	IO		041		1/8	
0CA3	IO		315		1/9	
	IO		341		1/8	
0CA7	IO		216		1/8	
	IO		241		1/9	
0CB0	IO		242		1/5	
0CB1	IO		342		1/5	
0CB2	IO		316		1/5	
0CB3	IO		217		1/5	
0CDSCLK	IO		244		1/5	
	IO		318		1/5	
0CDSYNC3	IO		123		1/8	

SYMBOL NO. 8 (CONT)

CHANNEL CIRCUIT

DESIG	EQPT LOC	CODE	ELEM IDENT	OPT
0CHAN8A3	04-066	SEE NOTE 309	A	

LEAD DESIG	FUNC	TERM. MOD	TERM.	TERM. OPT	DESTINATION	NOTE
	IO		238		1/9	
0CDW	IO		243		1/5	
	IO		317		1/5	
0CHDA13	IO		320		1/8	
	IO		339		1/9	
0CHDA03	IO		036		1/8	
	IO		220		1/9	
0CHD1	IO		017		1/5	
0CHRD	IO		016		1/5	
0CURPRN	IO		012		1/1	
0CURPRP	IO		112		1/1	
0CW2	IO		218		1/5	
	IO		343		1/5	
0TSA3	IO		139		1/9	
	IO		222		1/8	
0TSA7	IO		236		1/9	
	IO		321		1/8	
0TSB0D	IO		221		1/9	
	IO		336		1/8	
0TSB1D	IO		239		1/9	
0TSB2D	IO		322		1/8	
	IO		338		1/9	
0TSB3D	IO		223		1/9	
04MCK3	IO		323		1/9	
	IO		337		1/8	

SYMBOL NO. 9

COMMON DATA AND CONTROL

DESIG	EQPT LOC	CODE	ELEM IDENT	OPT
0COMDAC	04-074	UN322	A	(J)
0COMDAC	04-074	UN402	A	(G)

LEAD DESIG	FUNC	TERM. MOD	TERM.	TERM. OPT	DESTINATION	NOTE
+5V04	IO		249		1/1	
	IO		250		1/1	
	IO		251		1/1	
	IO		252		1/1	
	IO		253		1/1	
	IO		254		1/1	
	IO		255		1/1	
	IO		256		1/1	
-48RTN1C	GRD		248		2/1	
-48V01	PWR		000		1/5	
	PWR		100		1/5	
	PWR		200		1/5	
FGRD	IO		047		1/1	
	IO		147		1/1	
	IO		347		1/1	
	IO		447		1/1	
GRD04074	GRD		013			
	GRD		023			
	GRD		035			
	GRD		124			
	GRD		133			

SYMBOL NO. 9 (CONT)

COMMON DATA AND CONTROL

DESIG	EQPT LOC	CODE	ELEM IDENT	OPT
0COMDAC	04-074	UN322	A	(J)
0COMDAC	04-074	UN402	A	(G)

LEAD DESIG	FUNC	TERM. MOD	TERM.	TERM. OPT	DESTINATION	NOTE
	GRD		208			
	GRD		211			
	GRD		213			
	GRD		219			
	GRD		223			
	GRD		246			
	GRD		300			
	GRD		301			
	GRD		332			
	GRD		336			
	GRD		400			
	GRD		401			
	GRD		412			
	GRD		500			
	GRD		501			
	GRD		508			
	GRD		512			
	GRD		521			
	GRD		524			
	GRD		536			
	GRD		540			
	GRD		547			
	GRD		548			
	GRD		549			
	GRD		550			
	GRD		551			
	GRD		552			
	GRD		553			
	GRD		554			
	GRD		555			
	GRD		556			
0AASW0	IO		008		1/42	
0AASW1	IO		308		1/42	
0ACASW0	IO		106		1/11	
0ACASW1	IO		406		1/10	
0ACCK0	IO		544		1/11	
0ACCK1	IO		345		1/10	
0ACDATA0	IO		533		1/11	
0ACDATA1	IO		334		1/10	
0ACEN0	IO		144		1/11	
0ACEN1	IO		244		1/10	
0ASWG00	IO		002		1/14	
0ASWG01	IO		302		1/17	
0ASWG10	IO		102		2/14	
0ASWG11	IO		402		2/17	
0ASWG20	IO		202		1/20	
0ASWG21	IO		502		1/23	
0ASWG30	IO		003		2/20	
0ASWG31	IO		303		2/23	
0ASWG40	IO		103		1/26	
0ASWG41	IO		403		1/29	
0ASWG50	IO		203		2/26	
0ASWG51	IO		503		2/29	
0ASWG60	IO		004		1/32	
0ASWG61	IO		304		1/35	
0ASWG70	IO		104		2/32	
0ASWG71	IO		404		2/35	
0ASWG80	IO		206		1/38	
0ASWG81	IO		307		1/41	
0ASWG90	IO		107		2/38	

SYMBOL NO. 9 (CONT)

COMMON DATA AND CONTROL

DESIG	EQPT LOC	CODE	ELEM IDENT	OPT
0COMDAC	04-074	UN322	A	(J)
0COMDAC	04-074	UN402	A	(G)

LEAD DESIG	FUNC	TERM. MOD	TERM.	TERM. OPT	DESTINATION	NOTE
0ASWG91	IO		507		2/41	
0CASW00	IO		204		1/5	
0CASW02	IO		005		1/7	
0CASW11	IO		504		1/6	
0CASW13	IO		305		1/8	
0CA0	IO		020		1/5	
0CA1	IO		120		1/6	
0CA2	IO		220		1/7	
0CA3	IO		021		1/8	
0CA4	IO		121		1/5	
0CA5	IO		221		1/6	
0CA6	IO		022		1/7	
0CA7	IO		122		1/8	
0CB0	IO		108		1/5	
0CB1	IO		212		1/5	
0CB2	IO		119		1/5	
0CB3	IO		222		1/5	
0CDSCLK	IO		024		1/5	
0CDSYNC0	IO		233		1/5	
0CDSYNC1	IO		034		1/6	
0CDSYNC2	IO		134		1/7	
0CDSYNC3	IO		234		1/8	
0CDW	IO		224		1/5	
0CHDA10	IO		236		1/5	
0CHDA11	IO		037		1/6	
0CHDA12	IO		137		1/7	
0CHDA13	IO		237		1/8	
0CHDA00	IO		135		1/5	
0CHDA01	IO		235		1/6	
0CHDA02	IO		036		1/7	
0CHDA03	IO		136		1/8	
0CHD1	IO		001		1/5	
0CHRD	IO		101		1/5	
0CLAUX	IO		546		1/42	
0CLG0	IO		341		1/14,1/17	
0CLG1	IO		441		2/14,2/17	
0CLG2	IO		541		1/20,1/23	
0CLG3	IO		342		2/20,2/23	
0CLG4	IO		442		1/26,1/29	
0CLG5	IO		542		2/26,2/29	
0CLG6	IO		343		1/32,1/35	
0CLG7	IO		443		2/32,2/35	
0CLHG80	IO		445		1/38	
0CLHG81	IO		545		1/41	
0CLHG90	IO		346		2/38	
0CLHG91	IO		446		2/41	
0CLK0N	IO		050		TO CAD 1 - DC	
0CLK0P	IO		150		TO CAD 1 - DC	
0CLK1N	IO		350		TO CAD 1 - DE	

PART OF FS 1

SYMBOL(S) 8 9

COPYRIGHT (C) 1987 AT&T
ALL RIGHTS RESERVED

LINE UNIT, MODEL 3

DWG SIZE: C2

ISSUE: 2M

AT&T BELL LABORATORIES

SD-5D180-01

B1CD

PART OF FS 1

LUS LOWER SHELF

SYMBOL NO. 9 (CONT)

COMMON DATA AND CONTROL

DESIG	EQPT LOC	CODE	ELEM IDENT	OPT
0CCMDAC	04-074	UN322	A	(J)
0CCMDAC	04-074	UN402	A	(G)

LEAD DESIG	FUNC	TERM. MOD	TERM.	TERM. OPT	DESTINATION	NOTE
0CLK1P	IO		458		TO CAD 1 - DE	
0CURPRN	IO		012		1/1	
0CURPRP	IO		112		1/1	
0CW2	IO		123		1/5	
0DAIN0N	IO		153		TO CAD 1 - DG	
0DAIN0P	IO		053		TO CAD 1 - DG	
0DAIN1N	IO		455		TO CAD 1 - DI	
0DAIN1P	IO		355		TO CAD 1 - DI	
0DAOT0N	IO		154		TO CAD 1 - DG	
0DAOT0P	IO		054		TO CAD 1 - DG	
0DAOT1N	IO		454		TO CAD 1 - DI	
0DAOT1P	IO		354		TO CAD 1 - DI	
0DAUX	IO		535		1/42	
0DG0	IO		322		1/14,1/17	
0DG1	IO		422		2/14,2/17	
0DG2	IO		522		1/20,1/23	
0DG3	IO		323		2/20,2/23	
0DG4	IO		423		1/26,1/29	
0DG5	IO		523		2/26,2/29	
0DG6	IO		324		1/32,1/35	
0DG7	IO		424		2/32,2/35	
0DG80	IO		434		1/38	
0DG81	IO		534		1/41	
0DG90	IO		335		2/38	
0DG91	IO		435		2/41	
0EAUX	IO		144		1/42	
0EG00	IO		036		1/16	
0EG01	IO		136		1/17	
0EG10	IO		236		2/14	
0EG11	IO		039		2/17	
0EG20	IO		139		1/20	
0EG21	IO		239		1/23	
0EG30	IO		040		2/20	
0EG31	IO		140		2/23	
0EG40	IO		240		1/26	
0EG41	IO		041		1/29	
0EG50	IO		141		2/26	
0EG51	IO		241		2/29	
0EG60	IO		042		1/32	
0EG61	IO		142		1/35	
0EG70	IO		242		2/32	
0EG71	IO		043		2/35	
0EG80	IO		043		1/38	
0EG81	IO		143		1/41	
0EG90	IO		243		2/38	
0EG91	IO		044		2/41	
0HASM00	IO		105		1/2	
0HASM01	IO		205		1/3	
0HASM02	IO		006		1/4	
0HASM10	IO		405		1/2	
0HASM11	IO		105		1/3	
0HASM12	IO		306		1/4	
0HCK0	IO		343		1/2	
0HCK1	IO		344		1/3	
0HCK2	IO		444		1/4	
0HDATA0	IO		532		1/2	
0HDATA1	IO		333		1/3	
0HDATA2	IO		433		1/4	
0HEN0	IO		143		1/2	

SYMBOL NO. 9 (CONT)

COMMON DATA AND CONTROL

DESIG	EQPT LOC	CODE	ELEM IDENT	OPT
0CCMDAC	04-074	UN322	A	(J)
0CCMDAC	04-074	UN402	A	(G)

LEAD DESIG	FUNC	TERM. MOD	TERM.	TERM. OPT	DESTINATION	NOTE
OHEN1	IO		243		1/3	
OHEN2	IO		844		1/4	
OMSGON	IO		051		TO CAD 1 - DC	
OMSG0P	IO		151		TO CAD 1 - DC	
OMSG1N	IO		351		TO CAD 1 - DE	
OMSG1P	IO		451		TO CAD 1 - DE	
ONINTON	IO		048		TO CAD 1 - DC	
ONINTOP	IO		148		TO CAD 1 - DC	
ONINTIN	IO		348		TO CAD 1 - DE	
ONINT1P	IO		448		TO CAD 1 - DE	
OPAA	IO		421		1/42	
OPAC00	IO		915		1/14	
OPAG01	IO		415		1/17	
OPAG10	IO		515		2/14	
OPAG11	IO		314		2/17	
OPAG20	IO		414		1/20	
OPAG21	IO		514		1/23	
OPAG30	IO		315		2/20	
OPAG31	IO		415		2/23	
OPAG40	IO		115		1/26	
OPAG41	IO		316		1/29	
OPAG50	IO		416		2/26	
OPAG51	IO		516		2/29	
OPAG60	IO		317		1/32	
OPAG61	IO		417		1/35	
OPAG70	IO		517		2/32	
OPAG71	IO		318		2/35	
OPAG80	IO		418		1/38	
OPAG81	IO		518		1/41	
OPAG90	IO		519		2/38	
OPAG91	IO		321		2/41	
OPALPB	IO		419		1/11	
ORKCSLP0	IO		418		1/2	
ORKCSLP1	IO		518		1/3	
ORKCSLP2	IO		319		1/4	
ORPLY0N	IO		052		TO CAD 1 - DC	
ORPLY0P	IO		152		TO CAD 1 - DC	
ORPLY1N	IO		352		TO CAD 1 - DE	
ORPLY1P	IO		452		TO CAD 1 - DE	
OSLCT0N	IO		049		TO CAD 1 - DC	
OSLCT0P	IO		149		TO CAD 1 - DC	
OSLCT1N	IO		349		TO CAD 1 - DE	
OSLCT1P	IO		449		TO CAD 1 - DE	
OSLG0	IO		337		1/14,1/17	
OSLG1	IO		437		2/14,2/17	
OSLG2	IO		537		1/20,1/23	
OSLG3	IO		338		2/20,2/23	
OSLG4	IO		438		1/26,1/29	
OSLG5	IO		538		2/26,2/29	
OSLG6	IO		339		1/32,1/35	
OSLG7	IO		439		2/32,2/35	
OSLG8	IO		539		1/38,1/41	
OSLG9	IO		346		2/38,2/41	
OTSA0	IO		009		1/5	
OTSA1	IO		109		1/6	
OTSA2	IO		209		1/7	
OTSA3	IO		010		1/8	
OTSA4	IO		110		1/5	
OTSA5	IO		210		1/6	
OTSA6	IO		011		1/7	

SYMBOL NO. 9 (CONT)

COMMON DATA AND CONTROL

DESIG	EQPT LOC	CODE	ELEM IDENT	OPT
0CCMDAC	04-074	UN322	A	(J)
0CCMDAC	04-074	UN402	A	(G)

LEAD DESIG	FUNC	TERM. MOD	TERM.	TERM. OPT	DESTINATION	NOTE
OTSA7	IO		111		1/8	
OTSB0A	IO		014		1/5	
OTSB0B	IO		114		1/6	
OTSB0C	IO		214		1/7	
OTSB0D	IO		015		1/8	
OTSB1A	IO		115		1/5	
OTSB1B	IO		215		1/6	
OTSB1C	IO		016		1/7	
OTSB1D	IO		116		1/8	
OTSB2A	IO		216		1/5	
OTSB2B	IO		017		1/6	
OTSB2C	IO		117		1/7	
OTSB2D	IO		217		1/8	
OTSB3A	IO		018		1/5	
OTSB3B	IO		118		1/6	
OTSB3C	IO		218		1/7	
OTSB3D	IO		019		1/8	
025604Z0	IO		109		1/14,1/17	
025604Z1	IO		409		2/14,2/17	
025604Z2	IO		509		1/20,1/23	
025604Z3	IO		310		2/20,2/23	
025604Z4	IO		410		1/26,1/29	
025604Z5	IO		510		2/26,2/29	
025604Z6	IO		311		1/32,1/35	
025604Z7	IO		411		2/32,2/35	
025604Z8	IO		511		1/38,1/41	
025604Z9	IO		312		2/38,2/41	
04MDC10B	IO		156		TO CAD 1 - DG	
04MDC10P	IO		056		TO CAD 1 - DG	
04MDC11N	IO		456		TO CAD 1 - DI	
04MDC11P	IO		356		TO CAD 1 - DI	
04MDC0	IO		032		1/5	
04MDC1	IO		132		1/6	
04MDC2	IO		232		1/7	
04MDC3	IO		033		1/8	
04MDM2	IO		113		1/1	
0ARSMC0B	IO		155		TO CAD 1 - DG	
0ARSMC0P	IO		055		TO CAD 1 - DG	
0ARSMC1B	IO		455		TO CAD 1 - DI	
0ARSMC1P	IO		355		TO CAD 1 - DI	
TABLE3	IO		247		2/11	

PART OF FS 1

SYMBOL(S) 9

COPYRIGHT © 1987 AT&T
ALL RIGHTS RESERVED

LINE UNIT, MODEL 3

DWG SIZE: D2

ISSUE: 2M

AT&T BELL LABORATORIES

SD-50180-01

81CE

PART OF FS 1

LU3 LOWER SHELF

SYMBOL NO. 10

ACCESS LINERIZATION

DESIG	EQPT LOC	CODE	ELEM IDENT	OPT
OGDXAXL	04-084	TN831	A	

LEAD DESIG	FUNC	TERM. MOD	TERM.	TERM. OPT	DESTINATION	NOTE
+260V0	IO		306		1/11	
+295V0	IO		207		1/10	
	IO		307		1/11	
	IO		354		1/10	
+297V0	IO		206		1/11	
+300VR0	IO		007		1/10	
	IO		107		1/11	
+5V0	IO		001		1/10	
	IO		101		1/11	
-48V01	PWR		003		1/5	
	PWR		004		1/5	
GRD04084	GRD		000			
	GRD		005			
	GRD		006			
	GRD		033			
	GRD		034			
	GRD		100			
	GRD		105			
	GRD		106			
	GRD		133			
	GRD		134			
	GRD		200			
	GRD		203			
	GRD		204			
	GRD		300			
	GRD		301			
	GRD		302			
	GRD		303			
	GRD		304			
RB16	IO		235		1/17,1/20 1/26,1/35 1/38,2/14 2/20,2/29 2/35,2/38	
RB17	IO		234		1/14,1/23 1/29,1/32 1/38,2/14 2/23,2/29 2/32,2/41	
RB18	IO		035		1/17,1/20 1/26,1/35 1/41,2/17 2/23,2/26 2/32,2/41	
RB19	IO		236		1/14,1/23 1/29,1/32 1/41,2/17 2/20,2/26 2/35,2/38	
RB20	IO		036		1/17,1/23 1/26,1/32 1/38,2/14 2/23,2/29 2/32,2/41	
RB21	IO		241		1/14,1/20 1/29,1/35 1/38,2/14 2/20,2/29 2/35,2/38	
RB22	IO		242		1/17,1/23 1/26,1/32 1/41,2/17 2/20,2/26 2/35,2/38	
RB23	IO		243		1/14,1/20 1/29,1/35 1/41,2/17 2/23,2/26 2/32,2/41	
RB24	IO		214		1/14,1/23	

SYMBOL NO. 10 (CONT)

ACCESS LINERIZATION

DESIG	EQPT LOC	CODE	ELEM IDENT	OPT
OGDXAXL	04-084	TN831	A	

LEAD DESIG	FUNC	TERM. MOD	TERM.	TERM. OPT	DESTINATION	NOTE
					1/29,1/35 1/41,2/17 2/23,2/26 2/35,2/38	
RB25	IO		Z13		1/17,1/20 1/26,1/32 1/41,2/17 2/20,2/26 2/32,2/41	
RB26	IO		014		1/14,1/23 1/29,1/35 1/38,2/14 2/20,2/29 2/32,2/41	
RB27	IO		Z15		1/17,1/20 1/26,1/32 1/38,2/14 2/23,2/29 2/35,2/38	
RB28	IO		015		1/14,1/20 1/29,1/32 1/41,2/17 2/20,2/26 2/32,2/41	
RB29	IO		Z20		1/17,1/23 1/26,1/35 1/41,2/17 2/23,2/26 2/35,2/38	
RB30	IO		Z21		1/14,1/20 1/29,1/32 1/38,2/14 2/23,2/29 2/35,2/38	
RB31	IO		Z22		1/17,1/23 1/26,1/35 1/38,2/14 2/20,2/29 2/32,2/41	
RNG16	IO		038		1/5	
RNG17	IO		037		1/6	
RNG18	IO		238		1/7	
RNG19	IO		237		1/8	
RNG20	IO		239		1/5	
RNG21	IO		240		1/6	
RNG22	IO		039		1/7	
RNG23	IO		040		1/8	
RNG24	IO		017		1/5	
RNG25	IO		016		1/6	
RNG26	IO		217		1/7	
RNG27	IO		216		1/8	
RNG28	IO		218		1/5	
RNG29	IO		219		1/6	
RNG30	IO		018		1/7	
RNG31	IO		019		1/8	
TB16	IO		335		1/17,1/20 1/26,1/35 1/38,2/14 2/20,2/29 2/35,2/38	
TB17	IO		334		1/14,1/23 1/29,1/32 1/38,2/14 2/23,2/29 2/32,2/41	
TB18	IO		135		1/17,1/20 1/26,1/35 1/41,2/17 2/23,2/26 2/32,2/41	
TB19	IO		336		1/14,1/23 1/29,1/32 1/41,2/17	

SYMBOL NO. 10 (CONT)

ACCESS LINERIZATION

DESIG	EQPT LOC	CODE	ELEM IDENT	OPT
OGDXAXL	04-084	TN831	A	

LEAD DESIG	FUNC	TERM. MOD	TERM.	TERM. OPT	DESTINATION	NOTE
					2/20,2/26 2/35,2/38	
TB20	IO		136		1/17,1/23 1/26,1/32 1/38,2/14 2/23,2/29 2/32,2/41	
TB21	IO		341		1/14,1/20 1/29,1/35 1/38,2/14 2/20,2/29 2/35,2/38	
TB22	IO		342		1/17,1/23 1/26,1/32 1/41,2/17 2/20,2/26 2/35,2/38	
TB23	IO		343		1/14,1/20 1/29,1/35 1/41,2/17 2/23,2/26 2/32,2/41	
TB24	IO		314		1/14,1/23 1/29,1/35 1/41,2/17 2/23,2/26 2/35,2/38	
TB25	IO		313		1/17,1/20 1/26,1/32 1/41,2/17 2/20,2/26 2/32,2/41	
TB26	IO		114		1/14,1/23 1/29,1/35 1/38,2/14 2/20,2/29 2/32,2/41	
TB27	IO		315		1/17,1/20 1/26,1/32 1/38,2/14 2/23,2/29 2/35,2/38	
TB28	IO		115		1/14,1/20 1/29,1/32 1/41,2/17 2/20,2/26 2/32,2/41	
TB29	IO		320		1/17,1/23 1/26,1/35 1/41,2/17 2/23,2/26 2/35,2/38	
TB30	IO		321		1/14,1/20 1/29,1/32 1/38,2/14 2/23,2/29 2/35,2/38	
TB31	IO		322		1/17,1/23 1/26,1/35 1/38,2/14 2/20,2/29 2/32,2/41	
TIP16	IO		138		1/5	
TIP17	IO		137		1/6	
TIP18	IO		338		1/7	
TIP19	IO		337		1/8	
TIP20	IO		339		1/5	
TIP21	IO		340		1/6	
TIP22	IO		139		1/7	
TIP23	IO		140		1/8	
TIP24	IO		117		1/5	
TIP25	IO		116		1/6	

SYMBOL NO. 10 (CONT)

ACCESS LINERIZATION

DESIG	EQPT LOC	CODE	ELEM IDENT	OPT
OGDXAXL	04-084	TN831	A	

LEAD DESIG	FUNC	TERM. MOD	TERM.	TERM. OPT	DESTINATION	NOTE
TIP26	IO		317		1/7	
TIP27	IO		316		1/8	
TIP28	IO		318		1/5	
TIP29	IO		319		1/6	
TIP30	IO		118		1/7	
TIP31	IO		119		1/8	
OACASW1	IO		051		1/9	
OACBUS0R	IO		310		1/2	
OACBUS0T	IO		210		1/2	
OACBUS1R	IO		209		1/3	
OACBUS1T	IO		309		1/3	
OACBUS2R	IO		010		1/4	
OACBUS2T	IO		110		1/4	
OACBUS3R	IO		109		1/11,2/2	
OACBUS3T	IO		009		1/11,2/2	
OACBUS4R	IO		146		1/11,2/3	
OACBUS4T	IO		046		1/11,2/3	
OACBUS5R	IO		346		1/11,2/4	
OACBUS5T	IO		246		1/11,2/4	
OACBUS6R	IO		232		1/11	
OACBUS6T	IO		332		1/11	
OACBUS7R	IO		032		1/11	
OACBUS7T	IO		132		1/11	
OACCK1	IO		353		1/9	
OACDATA1	IO		352		1/9	
OACEN1	IO		153		1/9	
OMTBR	IO		324		TO CAD 1 - DK	
OMTBT	IO		224		TO CAD 1 - DK	

PART OF FS 1

SYMBOL(S) 10

COPYRIGHT (C) 1987 AT&T
ALL RIGHTS RESERVED

LINE UNIT, MODEL 3

DWG SIZE	ISSUE
C2	1

AT&T BELL LABORATORIES	SD-5D180-01	B1CF

PART OF FS 1

LU3 LOWER SHELF

SYMBOL NO. 11

ACCESS POWER AND CONTROL

DESIG: OGDXAXP | EQPT LOC: 04-092 | CODE: TN832 | ELEM IDENT: A | OPT:

LEAD DESIG	FUNC	TERM. MOD	TERM.	TERM. OPT	DESTINATION	NOTE
+260V0	IO		105		1/10	
+295V0	IO		207		1/10	
	IO		307		1/10	
	IO		354		1/10	
+297V0	IO		206		1/10	
+300VR0	IO		007		1/10	
	IO		107		1/10	
+300VSG0	IO		106		2/11	
+300VSG1	IO		006		2/11	
+5V0	IO		001		1/10	
	IO		101		1/10	
+5V04	IO		056		1/1	
-48V01	PWR		003		1/5	
	PWR		004		1/5	
GRD04092	GRD		000			
	GRD		033			
	GRD		034			
	GRD		100			
	GRD		133			
	GRD		134			
	GRD		200			
	GRD		203			
	GRD		204			
	GRD		252			
	GRD		300			
	GRD		301			
	GRD		302			
	GRD		303			
	GRD		304			
RB0	IO		235		1/14,1/20 1/26,1/32 1/41,2/14 2/20,2/26 2/32,2/41	
RB1	IO		234		1/17,1/23 1/29,1/35 1/41,2/14 2/23,2/26 2/35,2/38	
RB10	IO		014		1/17,1/23 1/29,1/32 1/41,2/14 2/20,2/26 2/35,2/38	
RB11	IO		215		1/14,1/20 1/26,1/35 1/41,2/14 2/23,2/26 2/32,2/41	
RB12	IO		015		1/17,1/20 1/29,1/35 1/38,2/17 2/20,2/29 2/35,2/38	
RB13	IO		220		1/14,1/23 1/26,1/32 1/38,2/17 2/23,2/29 2/32,2/41	
RB14	IO		221		1/17,1/20 1/29,1/35 1/41,2/14 2/23,2/26 2/32,2/41	
RB15	IO		222		1/14,1/23 1/26,1/32 1/41,2/14 2/20,2/26 2/35,2/38	
RB2	IO		035		1/14,1/20	

SYMBOL NO. 11 (CONT)

ACCESS POWER AND CONTROL

DESIG: OGDXAXP | EQPT LOC: 04-092 | CODE: TN832 | ELEM IDENT: A | OPT:

LEAD DESIG	FUNC	TERM. MOD	TERM.	TERM. OPT	DESTINATION	NOTE
					1/26,1/32 1/38,2/17 2/23,2/29 2/35,2/38	
RB3	IO		236		1/17,1/23 1/29,1/35 1/38,2/17 2/20,2/29 2/32,2/41	
RB4	IO		036		1/14,1/23 1/26,1/35 1/41,2/14 2/23,2/26 2/35,2/38	
RB5	IO		241		1/17,1/20 1/29,1/32 1/41,2/14 2/20,2/26 2/32,2/41	
RB6	IO		242		1/14,1/23 1/26,1/35 1/38,2/17 2/20,2/29 2/32,2/41	
RB7	IO		243		1/17,1/20 1/29,1/32 1/38,2/17 2/23,2/29 2/35,2/38	
RB8	IO		214		1/17,1/23 1/29,1/32 1/38,2/17 2/23,2/29 2/32,2/41	
RB9	IO		213		1/14,1/20 1/26,1/35 1/38,2/17 2/20,2/29 2/35,2/38	
RNG00	IO		038		1/5	
RNG01	IO		037		1/6	
RNG02	IO		238		1/7	
RNG03	IO		237		1/8	
RNG04	IO		239		1/5	
RNG05	IO		240		1/6	
RNG06	IO		039		1/7	
RNG07	IO		040		1/8	
RNG08	IO		017		1/5	
RNG09	IO		016		1/6	
RNG10	IO		217		1/7	
RNG11	IO		216		1/8	
RNG12	IO		218		1/5	
RNG13	IO		219		1/6	
RNG14	IO		018		1/7	
RNG15	IO		019		1/8	
TB0	IO		335		1/14,1/20 1/26,1/32 1/41,2/14 2/20,2/26 2/32,2/41	
TB1	IO		334		1/17,1/23 1/29,1/35 1/41,2/14 2/23,2/26 2/35,2/38	
TB10	IO		114		1/17,1/23 1/29,1/32 1/41,2/14 2/20,2/26 2/35,2/38	
TB11	IO		315		1/14,1/20 1/26,1/35 1/41,2/14	

SYMBOL NO. 11 (CONT)

ACCESS POWER AND CONTROL

DESIG: OGDXAXP | EQPT LOC: 04-092 | CODE: TN832 | ELEM IDENT: A | OPT:

LEAD DESIG	FUNC	TERM. MOD	TERM.	TERM. OPT	DESTINATION	NOTE
					2/23,2/26 2/32,2/41	
TB12	IO		115		1/17,1/20 1/29,1/35 1/38,2/17 2/20,2/29 2/35,2/38	
TB13	IO		320		1/14,1/23 1/26,1/32 1/38,2/17 2/23,2/29 2/32,2/41	
TB14	IO		321		1/17,1/20 1/29,1/35 1/41,2/14 2/23,2/26 2/32,2/41	
TB15	IO		322		1/14,1/23 1/26,1/32 1/41,2/14 2/20,2/26 2/35,2/38	
TB2	IO		135		1/14,1/20 1/26,1/32 1/38,2/17 2/23,2/29 2/35,2/38	
TB3	IO		336		1/17,1/23 1/29,1/35 1/38,2/17 2/20,2/29 2/32,2/41	
TB4	IO		136		1/14,1/23 1/26,1/35 1/41,2/14 2/23,2/26 2/35,2/38	
TB5	IO		341		1/17,1/20 1/29,1/32 1/41,2/14 2/20,2/26 2/32,2/41	
TB6	IO		342		1/14,1/23 1/26,1/35 1/38,2/17 2/20,2/29 2/32,2/41	
TB7	IO		343		1/17,1/20 1/29,1/32 1/38,2/17 2/23,2/29 2/35,2/38	
TB8	IO		314		1/17,1/23 1/29,1/32 1/38,2/17 2/23,2/29 2/32,2/41	
TB9	IO		313		1/14,1/20 1/26,1/35 1/38,2/17 2/20,2/29 2/35,2/38	
TIP00	IO		138		1/5	
TIP01	IO		137		1/6	
TIP02	IO		338		1/7	
TIP03	IO		337		1/8	
TIP04	IO		339		1/5	
TIP05	IO		340		1/6	
TIP06	IO		139		1/7	
TIP07	IO		140		1/8	
TIP08	IO		117		1/5	
TIP09	IO		116		1/6	

SYMBOL NO. 11 (CONT)

ACCESS POWER AND CONTROL

DESIG: OGDXAXP | EQPT LOC: 04-092 | CODE: TN832 | ELEM IDENT: A | OPT:

LEAD DESIG	FUNC	TERM. MOD	TERM.	TERM. OPT	DESTINATION	NOTE
TIP10	IO		317		1/7	
TIP11	IO		316		1/8	
TIP12	IO		318		1/5	
TIP13	IO		319		1/6	
TIP14	IO		118		1/7	
TIP15	IO		119		1/8	
OACASW0	IO		051		1/9	
OACBUS0R	IO		310		1/2	
OACBUS0T	IO		210		1/2	
OACBUS1R	IO		209		1/3	
OACBUS1T	IO		309		1/3	
OACBUS2R	IO		010		1/4	
OACBUS2T	IO		110		1/4	
OACBUS3R	IO		109		1/10	
OACBUS3T	IO		009		1/10	
OACBUS4R	IO		146		1/10	
OACBUS4T	IO		046		1/10	
OACBUS5R	IO		346		1/10	
OACBUS5T	IO		246		1/10	
OACBUS6R	IO		232		1/10	
OACBUS6T	IO		332		1/10	
OACBUS7R	IO		032		1/10	
OACBUS7T	IO		132		1/10	
OACCK0	IO		353		1/9	
OACDATA0	IO		352		1/9	
OACENO	IO		153		1/9	
OANLED	IO		154		2/9	
OPRALM0	IO		251		1/9	

PART OF FS 1
SYMBOL(S) 11

COPYRIGHT (c) 1987 AT&T
ALL RIGHTS RESERVED

LINE UNIT, MODEL 3

DWG SIZE: D2 | ISSUE: 1

AT&T BELL LABORATORIES | SD-5D180-01 | B1CG

PART OF FS 1

LU3 LOWER SHELF

SYMBOL NO. 12

TERMINAL FIELD

DESIG	EQPT LOC	CODE	ELEM IDENT	OPT
TF	04-098	TERMINAL FIELD	A	

LEAD DESIG	FUNC	TERM. MOD	TERM.	TERM. OPT	DESTINATION	NOTE
R0000	IO		002		1/14 TO CAD 1 - AA	
R0001	IO		003		1/14 TO CAD 1 - AA	
R0002	IO		004		1/14 TO CAD 1 - AA	
R0003	IO		005		1/14 TO CAD 1 - AA	
R0010	IO		006		1/14 TO CAD 1 - AA	
R0011	IO		007		1/14 TO CAD 1 - AA	
R0012	IO		008		1/14 TO CAD 1 - AA	
R0013	IO		009		1/14 TO CAD 1 - AA	
R0020	IO		015		1/14 TO CAD 1 - AB	
R0021	IO		016		1/14 TO CAD 1 - AB	
R0022	IO		017		1/14 TO CAD 1 - AB	
R0023	IO		018		1/14 TO CAD 1 - AB	
R0030	IO		019		1/14 TO CAD 1 - AB	
R0031	IO		020		1/14 TO CAD 1 - AB	
R0032	IO		021		1/14 TO CAD 1 - AB	
R0033	IO		022		1/14 TO CAD 1 - AB	
R0040	IO		034		1/14 TO CAD 1 - AC	
R0041	IO		035		1/14 TO CAD 1 - AC	
R0042	IO		036		1/14 TO CAD 1 - AC	
R0043	IO		037		1/14 TO CAD 1 - AC	
R0050	IO		038		1/14 TO CAD 1 - AC	
R0051	IO		039		1/14 TO CAD 1 - AC	
R0052	IO		040		1/14 TO CAD 1 - AC	
R0053	IO		041		1/14 TO CAD 1 - AC	
R0060	IO		047		1/14 TO CAD 1 - AD	
R0061	IO		048		1/14 TO CAD 1 - AD	
R006Z	IO		049		1/14 TO CAD 1 - AD	
R0063	IO		050		1/14 TO CAD 1 - AD	
R0070	IO		051		1/14 TO CAD 1 - AD	
R0071	IO		052		1/14 TO CAD 1 - AD	
R007Z	IO		053		1/14 TO CAD 1 - AD	
R0073	IO		054		1/14 TO CAD 1 - AD	

SYMBOL NO. 13

TERMINAL FIELD

DESIG	EQPT LOC	CODE	ELEM IDENT	OPT
TF	04-099	TERMINAL FIELD	A	

LEAD DESIG	FUNC	TERM. MOD	TERM.	TERM. OPT	DESTINATION	NOTE
T0000	IO		002		1/14 TO CAD 1 - AA	
T0001	IO		003		1/14 TO CAD 1 - AA	
T0002	IO		004		1/14 TO CAD 1 - AA	
T0003	IO		005		1/14 TO CAD 1 - AA	
T0010	IO		006		1/14 TO CAD 1 - AA	
T0011	IO		007		1/14 TO CAD 1 - AA	
T0012	IO		008		1/14 TO CAD 1 - AA	
T0013	IO		009		1/14 TO CAD 1 - AA	
T0020	IO		015		1/14 TO CAD 1 - AB	
T0021	IO		016		1/14 TO CAD 1 - AB	
T0022	IO		017		1/14 TO CAD 1 - AB	
T0023	IO		018		1/14 TO CAD 1 - AB	
T0030	IO		019		1/14 TO CAD 1 - AB	
T0031	IO		020		1/14 TO CAD 1 - AB	
T0032	IO		021		1/14 TO CAD 1 - AB	
T0033	IO		022		1/14 TO CAD 1 - AB	
T0040	IO		034		1/14 TO CAD 1 - AC	
T0041	IO		035		1/14 TO CAD 1 - AC	
T004Z	IO		036		1/14 TO CAD 1 - AC	
T0043	IO		037		1/14 TO CAD 1 - AC	
T0050	IO		038		1/14 TO CAD 1 - AC	
T0051	IO		039		1/14 TO CAD 1 - AC	
T0052	IO		040		1/14 TO CAD 1 - AC	
T0053	IO		041		1/14 TO CAD 1 - AC	
T0060	IO		047		1/14 TO CAD 1 - AD	
T0061	IO		048		1/14 TO CAD 1 - AD	
T0062	IO		049		1/14 TO CAD 1 - AD	
T0063	IO		050		1/14 TO CAD 1 - AD	
T0070	IO		051		1/14 TO CAD 1 - AD	
T0071	IO		052		1/14 TO CAD 1 - AD	
T007Z	IO		053		1/14 TO CAD 1 - AD	
T0073	IO		054		1/14 TO CAD 1 - AD	

SYMBOL NO. 14

HALF GRID

DESIG	EQPT LOC	CODE	ELEM IDENT	OPT
GDXHG0	04-100	SEE NOTE 309	A	

LEAD DESIG	FUNC	TERM. MOD	TERM.	TERM. OPT	DESTINATION	NOTE
+300V00	IO		106		2/14	
+300V01	IO		006		2/14	
+5V04	IO		001		1/1	
+5V13	IO		101		1/1	
-48V02	PWR		004		1/14	
	PWR		003		1/17,1/49	
GRD04100	GRD		000			
	GRD		036			
	GRD		036			
	GRD		037			
	GRD		037			
	GRD		055			
	GRD		056			
	GRD		100			
	GRD		136			
	GRD		136			
	GRD		137			
	GRD		137			
	GRD		140			
	GRD		141			
	GRD		155			
	GRD		156			
	GRD		200			
	GRD		203			
	GRD		204			
	GRD		206			
	GRD		207			
	GRD		208			
	GRD		255			
	GRD		256			
	GRD		300			
	GRD		301			
	GRD		302			
	GRD		303			
	GRD		304			
	GRD		306			
	GRD		307			
	GRD		308			
	GRD		355			
	GRD		356			
RB0	IO		017		1/11	
RB11	IO		220		1/11	
RB13	IO		224		1/11	
RB15	IO		024		1/11	
RB17	IO		034		1/10	
RB19	IO		234		1/10	
RB2	IO		217		1/11	
RB21	IO		244		1/10	
RB23	IO		044		1/10	
RB24	IO		033		1/10	
RB26	IO		233		1/10	
RB28	IO		243		1/10	
RB30	IO		043		1/10	
RB33	IO		019		1/20,1/26 1/32,1/38 2/11,2/17 2/20,2/29 2/32,2.41	
RB35	IO		219		1/20,1/26 1/32,1/41 2/11,2/14 2/23,2/26 2/35,2/38	
RB37	IO		223		1/23,1/26	

SYMBOL NO. 14 (CONT)

HALF GRID

DESIG	EQPT LOC	CODE	ELEM IDENT	OPT
GDXHG0	04-100	SEE NOTE 309	A	

LEAD DESIG	FUNC	TERM. MOD	TERM.	TERM. OPT	DESTINATION	NOTE
					1/35,1/38 2/11,2/17 2/23,2/29 2/35,2/38	
RB39	IO		023		1/23,1/26 1/35,1/41 2/11,2/14 2/20,2/26 2/32,2/41	
RB4	IO		221		1/11	
RB40	IO		018		1/23,1/26 1/35,1/41 2/11,2/14 2/20,2/26 2/35,2/38	
RB42	IO		218		1/20,1/29 1/35,1/38 2/11,2/17 2/23,2/29 2/32,2/41	
RB44	IO		222		1/23,1/26 1/32,1/41 2/11,2/14 2/23,2/26 2/32,2/41	
RB46	IO		022		1/23,1/26 1/32,1/38 2/11,2/17 2/23,2/29 2/35,2/38	
RB48	IO		032		1/23,1/29 1/32,1/41 2/10,2/17 2/23,2/26 2/32,2/41	
RB50	IO		232		1/23,1/29 1/32,1/38 2/10,2/14 2/20,2/29 2/35,2/38	
RB52	IO		242		1/20,1/29 1/35,1/41 2/10,2/17 2/20,2/26 2/35,2/38	
RB54	IO		042		1/20,1/29 1/35,1/38 2/10,2/14 2/23,2/29 2/32,2/41	
RB57	IO		035		1/23,1/29 1/35,1/38 2/10,2/14 2/23,2/29 2/35,2/38	
RB59	IO		235		1/23,1/29 1/35,1/41 2/10,2/17 2/20,2/26 2/32,2/41	
RB6	IO		021		1/11	

PART OF FS 1

SYMBOL(S) 12 13 14

COPYRIGHT (c) 1987 AT&T
ALL RIGHTS RESERVED

LINE UNIT, MODEL 3

DWG SIZE: C2

ISSUE: 1

AT&T BELL LABORATORIES

SD-5D180-01

B1CH

PART OF FS 1

LU3 LOWER SHELF

SYMBOL NO. 14 (CONT)

HALF GRID

DESIG	EQPT LOC	CODE	ELEM IDENT	OPT
GDXHG0	04-100	SEE NOTE 309	A	

LEAD DESIG	FUNC	TERM. MOD	TERM.	TERM. OPT	DESTINATION	NOTE
RB61	IO		245		1/20,1/29 1/32,1/38 2/10,2/14 2/20,2/29 2/32,2/41	
RB63	IO		045		1/20,1/29 1/32,1/41 2/10,2/17 2/23,2/26 2/35,2/38	
RB9	IO		020		1/11	
R0000	IO		010		1/12	
R0001	IO		011		1/12	
R0002	IO		213		1/12	
R0003	IO		215		1/12	
R0010	IO		014		1/12	
R0011	IO		016		1/12	
R0012	IO		210		1/12	
R0013	IO		212		1/12	
R0020	IO		013		1/12	
R0021	IO		015		1/12	
R0022	IO		209		1/12	
R0023	IO		211		1/12	
R0030	IO		009		1/12	
R0031	IO		012		1/12	
R0032	IO		214		1/12	
R0033	IO		216		1/12	
R0040	IO		353		1/12	
R0041	IO		351		1/12	
R0042	IO		349		1/12	
R0043	IO		347		1/12	
R0050	IO		152		1/12	
R0051	IO		150		1/12	
R0052	IO		148		1/12	
R0053	IO		146		1/12	
R0060	IO		153		1/12	
R0061	IO		151		1/12	
R0062	IO		149		1/12	
R0063	IO		147		1/12	
R0070	IO		352		1/12	
R0071	IO		350		1/12	
R0072	IO		348		1/12	
R0073	IO		346		1/12	
TB0	IO		117		1/11	
TB11	IO		320		1/11	
TB13	IO		324		1/11	
TB15	IO		124		1/11	
TB17	IO		134		1/10	
TB19	IO		334		1/10	
TB2	IO		317		1/11	
TB21	IO		344		1/10	
TB23	IO		144		1/10	
TB24	IO		133		1/10	
TB26	IO		333		1/10	
TB28	IO		343		1/10	
TB30	IO		143		1/10	
TB33	IO		119		1/20,1/26 1/32,1/38 2/11,2/17 2/20,2/29 2/32,2/41	
TB35	IO		319		1/20,1/26 1/32,1/41 2/11,2/14 2/23,2/26 2/35,2/38	

SYMBOL NO. 14 (CONT)

HALF GRID

DESIG	EQPT LOC	CODE	ELEM IDENT	OPT
GDXHG0	04-100	SEE NOTE 309	A	

LEAD DESIG	FUNC	TERM. MOD	TERM.	TERM. OPT	DESTINATION	NOTE
TB37	IO		323		1/23,1/26 1/35,1/38 2/11,2/17 2/23,2/29 2/35,2/38	
TB39	IO		123		1/23,1/26 1/35,1/41 2/11,2/14 2/20,2/26 2/32,2/41	
[illegible]	IO		321		1/11	
TB40	IO		118		1/20,1/26 1/35,1/41 2/11,2/14 2/20,2/26 2/35,2/38	
TB42	IO		318		1/20,1/26 1/35,1/38 2/11,2/17 2/23,2/29 2/32,2/41	
TB44	IO		322		1/23,1/26 1/32,1/41 2/11,2/14 2/23,2/26 2/32,2/41	
TB46	IO		122		1/23,1/26 1/32,1/38 2/11,2/17 2/20,2/29 2/35,2/38	
TB48	IO		132		1/23,1/29 1/32,1/41 2/10,2/17 2/23,2/26 2/32,2/41	
TB50	IO		332		1/23,1/29 1/32,1/38 2/10,2/14 2/20,2/29 2/35,2/38	
TB52	IO		342		1/20,1/29 1/35,1/41 2/10,2/17 2/20,2/26 2/35,2/38	
TB54	IO		142		1/20,1/29 1/35,1/38 2/10,2/14 2/23,2/29 2/32,2/41	
TB57	IO		135		1/23,1/29 1/35,1/38 2/10,2/14 2/23,2/29 2/35,2/38	
TB59	IO		335		1/23,1/29 1/35,1/41 2/10,2/17 2/20,2/26 2/32,2/41	
TB6	IO		121		1/11	
TB61	IO		345		1/20,1/29 1/32,1/38 2/10,2/14 2/20,2/29 2/32,2/41	
TB63	IO		145		1/20,1/29 1/32,1/41 2/10,2/17 2/23,2/26 2/35,2/38	

SYMBOL NO. 14 (CONT)

HALF GRID

DESIG	EQPT LOC	CODE	ELEM IDENT	OPT
GDXHG0	04-100	SEE NOTE 309	A	

LEAD DESIG	FUNC	TERM. MOD	TERM.	TERM. OPT	DESTINATION	NOTE
TB9	IO		120		1/11	
T0000	IO		110		1/13	
T0001	IO		111		1/13	
T0002	IO		313		1/13	
T0003	IO		315		1/13	
T0010	IO		114		1/13	
T0011	IO		116		1/13	
T0012	IO		310		1/13	
T0013	IO		312		1/13	
T0020	IO		113		1/13	
T0021	IO		115		1/13	
T0022	IO		309		1/13	
T0023	IO		311		1/13	
T0030	IO		109		1/13	
T0031	IO		112		1/13	
T0032	IO		314		1/13	
T0033	IO		316		1/13	
T0040	IO		253		1/13	
T0041	IO		251		1/13	
T0042	IO		249		1/13	
T0043	IO		247		1/13	
T0050	IO		052		1/13	
T0051	IO		050		1/13	
T0052	IO		048		1/13	
T0053	IO		046		1/13	
T0060	IO		053		1/13	
T0061	IO		051		1/13	
T0062	IO		049		1/13	
T0063	IO		047		1/13	
T0070	IO		252		1/13	
T0071	IO		250		1/13	
T0072	IO		248		1/13	
T0073	IO		246		1/13	
0ASWG00	IO		237		1/9	
0CLG0	IO		241		1/9	
0DG0	IO		338		1/9	
0EG00	IO		341		1/9	
0PAG00	IO		236		1/9	
0SLG0	IO		240		1/9	
0256KHZ0	IO		038		1/9	
1ASWG00	IO		337		2/9	
1CLG0	IO		339		1/17,2/9	
1DG0	IO		238		1/17,2/9	
1EG00	IO		239		2/9	
1PAG00	IO		336		2/9	
1SLG0	IO		340		1/17,2/9	
1256KHZ0	IO		138		1/17,2/9	

PART OF FS 1
SYMBOL(S) 14

COPYRIGHT (c) 1987 AT&T
ALL RIGHTS RESERVED

LINE UNIT, MODEL 3

DWG SIZE	ISSUE
C2	1

AT&T BELL LABORATORIES	SD-5D180-01	B1CJ

PART OF FS 1

LU3 LOWER SHELF

SYMBOL NO. 15

TERMINAL FIELD

DESIG	EQPT LOC	CODE	ELEM IDENT	OPT
TF	04-106	TERMINAL FIELD	A	

LEAD DESIG	FUNC	TERM. MOD	TERM.	TERM. OPT	DESTINATION	NOTE
R0100	IO		002		1/17 TO CAD 1 - AE	
R0101	IO		003		1/17 TO CAD 1 - AE	
R0102	IO		004		1/17 TO CAD 1 - AE	
R0103	IO		005		1/17 TO CAD 1 - AE	
R0110	IO		006		1/17 TO CAD 1 - AE	
R0111	IO		007		1/17 TO CAD 1 - AE	
R0112	IO		008		1/17 TO CAD 1 - AE	
R0113	IO		009		1/17 TO CAD 1 - AE	
R0120	IO		015		1/17 TO CAD 1 - AF	
R0121	IO		016		1/17 TO CAD 1 - AF	
R0122	IO		017		1/17 TO CAD 1 - AF	
R0123	IO		018		1/17 TO CAD 1 - AF	
R0130	IO		019		1/17 TO CAD 1 - AF	
R0131	IO		020		1/17 TO CAD 1 - AF	
R0132	IO		021		1/17 TO CAD 1 - AF	
R0133	IO		022		1/17 TO CAD 1 - AF	
R0140	IO		034		1/17 TO CAD 1 - AG	
R0141	IO		035		1/17 TO CAD 1 - AG	
R0142	IO		036		1/17 TO CAD 1 - AG	
R0143	IO		037		1/17 TO CAD 1 - AG	
R0150	IO		038		1/17 TO CAD 1 - AG	
R0151	IO		039		1/17 TO CAD 1 - AG	
R0152	IO		040		1/17 TO CAD 1 - AG	
R0153	IO		041		1/17 TO CAD 1 - AG	
R0160	IO		047		1/17 TO CAD 1 - AH	
R0161	IO		048		1/17 TO CAD 1 - AH	
R0162	IO		049		1/17 TO CAD 1 - AH	
R0163	IO		050		1/17 TO CAD 1 - AH	
R0170	IO		051		1/17 TO CAD 1 - AH	
R0171	IO		052		1/17 TO CAD 1 - AH	
R0172	IO		053		1/17 TO CAD 1 - AH	
R0173	IO		054		1/17 TO CAD 1 - AH	

SYMBOL NO. 16

TERMINAL FIELD

DESIG	EQPT LOC	CODE	ELEM IDENT	OPT
TF	04-107	TERMINAL FIELD	A	

LEAD DESIG	FUNC	TERM. MOD	TERM.	TERM. OPT	DESTINATION	NOTE
T0100	IO		002		1/17 TO CAD 1 - AE	
T0101	IO		003		1/17 TO CAD 1 - AE	
T0102	IO		004		1/17 TO CAD 1 - AE	
T0103	IO		005		1/17 TO CAD 1 - AE	
T0110	IO		006		1/17 TO CAD 1 - AE	
T0111	IO		007		1/17 TO CAD 1 - AE	
T0112	IO		008		1/17 TO CAD 1 - AE	
T0113	IO		009		1/17 TO CAD 1 - AE	
T0120	IO		015		1/17 TO CAD 1 - AF	
T0121	IO		016		1/17 TO CAD 1 - AF	
T0122	IO		017		1/17 TO CAD 1 - AF	
T0123	IO		018		1/17 TO CAD 1 - AF	
T0130	IO		019		1/17 TO CAD 1 - AF	
T0131	IO		020		1/17 TO CAD 1 - AF	
T0132	IO		021		1/17 TO CAD 1 - AF	
T0133	IO		022		1/17 TO CAD 1 - AF	
T0140	IO		034		1/17 TO CAD 1 - AG	
T0141	IO		035		1/17 TO CAD 1 - AG	
T0142	IO		036		1/17 TO CAD 1 - AG	
T0143	IO		037		1/17 TO CAD 1 - AG	
T0150	IO		038		1/17 TO CAD 1 - AG	
T0151	IO		039		1/17 TO CAD 1 - AG	
T0152	IO		040		1/17 TO CAD 1 - AG	
T0153	IO		041		1/17 TO CAD 1 - AG	
T0160	IO		047		1/17 TO CAD 1 - AH	
T0161	IO		048		1/17 TO CAD 1 - AH	
T0162	IO		049		1/17 TO CAD 1 - AH	
T0163	IO		050		1/17 TO CAD 1 - AH	
T0170	IO		051		1/17 TO CAD 1 - AH	
T0171	IO		052		1/17 TO CAD 1 - AH	
T0172	IO		053		1/17 TO CAD 1 - AH	
T0173	IO		054		1/17 TO CAD 1 - AH	

SYMBOL NO. 17

HALF GRID

DESIG	EQPT LOC	CODE	ELEM IDENT	OPT
GDXHG1	04-108	SEE NOTE 309	A	

LEAD DESIG	FUNC	TERM. MOD	TERM.	TERM. OPT	DESTINATION	NOTE
+300V02	IO		106		2/17	
+300V03	IO		006		2/17	
+5V04	IO		001		1/1	
+5V13	IO		101		1/1	
-48V02	PWR		003		1/14	
	PWR		004		1/14	
GRD04108	GRD		000			
	GRD		036			
	GRD		036			
	GRD		037			
	GRD		037			
	GRD		055			
	GRD		056			
	GRD		100			
	GRD		136			
	GRD		136			
	GRD		137			
	GRD		137			
	GRD		140			
	GRD		141			
	GRD		155			
	GRD		156			
	GRD		200			
	GRD		203			
	GRD		204			
	GRD		206			
	GRD		207			
	GRD		208			
	GRD		255			
	GRD		256			
	GRD		300			
	GRD		301			
	GRD		302			
	GRD		303			
	GRD		304			
	GRD		306			
	GRD		307			
	GRD		308			
	GRD		355			
	GRD		356			
RB1	IO		019		1/11	
RB10	IO		218		1/11	
RB12	IO		222		1/11	
RB14	IO		022		1/11	
RB16	IO		032		1/10	
RB18	IO		232		1/10	
RB20	IO		242		1/10	
RB22	IO		042		1/10	
RB25	IO		035		1/10	
RB27	IO		235		1/10	
RB29	IO		245		1/10	
RB3	IO		219		1/11	
RB31	IO		045		1/10	
RB32	IO		017		1/23,1/29 1/35,1/38 2/11,2/17 2/23,2/29 2/35,2/38	
RB34	IO		217		1/23,1/29 1/35,1/41 2/11,2/14 2/20,2/26 2/32,2/41	
RB36	IO		221		1/20,1/29	

SYMBOL NO. 17 (CONT)

HALF GRID

DESIG	EQPT LOC	CODE	ELEM IDENT	OPT
GDXHG1	04-108	SEE NOTE 309	A	

LEAD DESIG	FUNC	TERM. MOD	TERM.	TERM. OPT	DESTINATION	NOTE
					1/32,1/38 2/11,2/17 2/20,2/29 2/32,2/41	
RB38	IO		021		1/20,1/29 1/32,1/41 2/11,2/14 2/23,2/26 2/35,2/38	
RB41	IO		020		1/23,1/29 1/32,1/41 2/11,2/14 2/23,2/26 2/32,2/41	
RB43	IO		220		1/23,1/29 1/32,1/38 2/11,2/17 2/20,2/29 2/35,2/38	
RB45	IO		224		1/20,1/29 1/35,1/41 2/11,2/14 2/20,2/26 2/35,2/38	
RB47	IO		024		1/20,1/29 1/35,1/38 2/11,2/17 2/23,2/29 2/32,2/41	
RB49	IO		034		1/20,1/26 1/35,1/41 2/10,2/17 2/20,2/26 2/35,2/38	
RB5	IO		223		1/11	
RB51	IO		234		1/20,1/26 1/35,1/38 2/10,2/14 2/23,2/29 2/32,2/41	
RB53	IO		244		1/23,1/26 1/32,1/41 2/10,2/17 2/23,2/26 2/32,2/41	
RB55	IO		044		1/23,1/26 1/32,1/38 2/10,2/14 2/20,2/29 2/35,2/38	
RB56	IO		033		1/20,1/26 1/32,1/38 2/10,2/14 2/20,2/29 2/32,2/41	
RB58	IO		233		1/20,1/26 1/32,1/41 2/10,2/17 2/23,2/26 2/35,2/38	
RB60	IO		243		1/23,1/26 1/35,1/38	

PART OF FS 1

SYMBOL(S) 15 16 17

COPYRIGHT (c) 1987 AT&T
ALL RIGHTS RESERVED

LINE UNIT, MODEL 3

DWG SIZE	ISSUE
D2	1

AT&T BELL LABORATORIES	SD-5D180-01	B1CK

PART OF FS 1

LU3 LOWER SHELF

SYMBOL NO. 17 (CONT)

HALF GRID

DESIG	EQPT LOC	CODE	ELEM IDENT	OPT
GDXHG1	04-108	SEE NOTE 309	A	

LEAD DESIG	FUNC	TERM. MOD	TERM.	TERM. OPT	DESTINATION	NOTE
					2/10,2/14 2/23,2/29 2/35,2/38	
RB62	IO		043		1/23,1/26 1/35,1/41 2/10,2/17 2/20,2/26 2/32,2/41	
RB7	IO		023		1/11	
RB8	IO		018		1/11	
R0100	IO		010		1/15	
R0101	IO		011		1/15	
R0102	IO		213		1/15	
R0103	IO		215		1/15	
R0110	IO		014		1/15	
R0111	IO		016		1/15	
R0112	IO		210		1/15	
R0113	IO		212		1/15	
R0120	IO		013		1/15	
R0121	IO		015		1/15	
R0122	IO		209		1/15	
R0123	IO		211		1/15	
R0130	IO		009		1/15	
R0131	IO		012		1/15	
R0132	IO		214		1/15	
R0133	IO		216		1/15	
R0140	IO		353		1/15	
R0141	IO		351		1/15	
R0142	IO		349		1/15	
R0143	IO		347		1/15	
R0150	IO		152		1/15	
R0151	IO		150		1/15	
R0152	IO		148		1/15	
R0153	IO		146		1/15	
R0160	IO		153		1/15	
R0161	IO		151		1/15	
R0162	IO		149		1/15	
R0163	IO		147		1/15	
R0170	IO		352		1/15	
R0171	IO		350		1/15	
R0172	IO		348		1/15	
R0173	IO		346		1/15	
TB1	IO		119		1/11	
TB10	IO		318		1/11	
TB12	IO		322		1/11	
TB14	IO		122		1/11	
TB16	IO		132		1/10	
TB18	IO		332		1/10	
TB20	IO		342		1/10	
TB22	IO		142		1/10	
TB25	IO		135		1/10	
TB27	IO		335		1/10	
TB29	IO		345		1/10	
TB3	IO		319		1/11	
TB31	IO		145		1/10	
TB32	IO		117		1/23,1/29 1/35,1/38 2/11,2/17 2/23,2/29 2/35,2/38	
TB34	IO		317		1/23,1/29 1/35,1/41 2/11,2/14 2/20,2/26 2/32,2/41	

SYMBOL NO. 17 (CONT)

HALF GRID

DESIG	EQPT LOC	CODE	ELEM IDENT	OPT
COXHG1	04-108	SEE NOTE 309	A	

LEAD DESIG	FUNC	TERM. MOD	TERM.	TERM. OPT	DESTINATION	NOTE
TB36	IO		321		1/20,1/29 1/32,1/38 2/11,2/17 2/20,2/29 2/32,2/41	
TB38	IO		121		1/20,1/29 1/32,1/41 2/11,2/14 2/23,2/26 2/35,2/38	
TB41	IO		120		1/23,1/29 1/32,1/41 2/11,2/14 2/23,2/26 2/32,2/41	
TB43	IO		320		1/23,1/29 1/32,1/38 2/11,2/17 2/20,2/29 2/35,2/38	
TB45	IO		324		1/20,1/29 1/35,1/41 2/11,2/14 2/20,2/26 2/35,2/38	
TB47	IO		124		1/20,1/29 1/35,1/38 2/11,2/17 2/23,2/29 2/32,2/41	
TB49	IO		134		1/20,1/26 1/35,1/41 2/10,2/17 2/20,2/26 2/35,2/38	
TB5	IO		323		1/11	
TB51	IO		334		1/20,1/26 1/35,1/38 2/10,2/14 2/23,2/29 2/32,2/41	
TB53	IO		344		1/23,1/26 1/32,1/41 2/10,2/17 2/23,2/26 2/32,2/41	
TB55	IO		144		1/23,1/26 1/32,1/38 2/10,2/14 2/20,2/29 2/35,2/38	
TB56	IO		133		1/20,1/26 1/32,1/38 2/10,2/14 2/20,2/29 2/32,2/41	
TB58	IO		333		1/20,1/26 1/32,1/41 2/10,2/17 2/23,2/26 2/35,2/38	
TB60	IO		343		1/23,1/26 1/35,1/38 2/10,2/14 2/23,2/29 2/35,2/38	
TB62	IO		143		1/23,1/26 1/35,1/41 2/10,2/17 2/20,2/26 2/32,2/41	
TB7	IO		123		1/11	

SYMBOL NO. 17 (CONT)

HALF GRID

DESIG	EQPT LOC	CODE	ELEM IDENT	OPT
GDXHG1	04-108	SEE NOTE 309	A	

LEAD DESIG	FUNC	TERM. MOD	TERM.	TERM. OPT	DESTINATION	NOTE
T88	IO		118		1/11	
T0100	IO		110		1/16	
T0101	IO		111		1/16	
T0102	IO		315		1/16	
T0103	IO		315		1/16	
T0110	IO		114		1/16	
T0111	IO		116		1/16	
T0112	IO		310		1/16	
T0113	IO		312		1/16	
T0120	IO		113		1/16	
T0121	IO		115		1/16	
T0122	IO		309		1/16	
T0123	IO		311		1/16	
T0130	IO		109		1/16	
T0131	IO		112		1/16	
T0132	IO		314		1/16	
T0133	IO		316		1/16	
T0140	IO		253		1/16	
T0141	IO		251		1/16	
T0142	IO		249		1/16	
T0143	IO		247		1/16	
T0150	IO		052		1/16	
T0151	IO		050		1/16	
T0152	IO		048		1/16	
T0153	IO		046		1/16	
T0160	IO		053		1/16	
T0161	IO		051		1/16	
T0162	IO		049		1/16	
T0163	IO		047		1/16	
T0170	IO		252		1/16	
T0171	IO		250		1/16	
T0172	IO		248		1/16	
T0173	IO		246		1/16	
0ASWG01	IO		237		1/9	
0CLG0	IO		241		1/9	
0DG0	IO		338		1/9	
0EG01	IO		341		1/9	
0PAG01	IO		236		1/9	
0SLG0	IO		240		1/9	
0256KHZ0	IO		038		1/9	
1ASWG01	IO		337		2/9	
1CLG0	IO		339		1/14	
1DG0	IO		238		1/14	
1EG01	IO		239		2/9	
1PAG01	IO		336		2/9	
1SLG0	IO		340		1/14	
1256KHZ0	IO		138		1/14	

PART OF FS 1
SYMBOL(S) 17

COPYRIGHT (c) 1987 AT&T
ALL RIGHTS RESERVED

LINE UNIT, MODEL 3

DWG SIZE: C2

ISSUE: 1

AT&T BELL LABORATORIES

SD-5D180-01

B1CL

PART OF FS 1

LU3 LOWER SHELF

SYMBOL NO. 18

TERMINAL FIELD

DESIG	EQPT LOC	CODE	ELEM IDENT	OPT
TF	04-114	TERMINAL FIELD	A	

LEAD DESIG	FUNC	TERM. MOD	TERM.	TERM. OPT	DESTINATION	NOTE
R2000	IO		002		1/20 TO CAD 1 - AQ	
R2001	IO		003		1/20 TO CAD 1 - AQ	
R2002	IO		004		1/20 TO CAD 1 - AQ	
R2003	IO		005		1/20 TO CAD 1 - AQ	
R2010	IO		006		1/20 TO CAD 1 - AQ	
R2011	IO		007		1/20 TO CAD 1 - AQ	
R2012	IO		008		1/20 TO CAD 1 - AQ	
R2013	IO		009		1/20 TO CAD 1 - AQ	
R2020	IO		015		1/20 TO CAD 1 - AR	
R2021	IO		016		1/20 TO CAD 1 - AR	
R2022	IO		017		1/20 TO CAD 1 - AR	
R2023	IO		018		1/20 TO CAD 1 - AR	
R2030	IO		019		1/20 TO CAD 1 - AR	
R2031	IO		020		1/20 TO CAD 1 - AR	
R2032	IO		021		1/20 TO CAD 1 - AR	
R2033	IO		022		1/20 TO CAD 1 - AR	
R2040	IO		034		1/20 TO CAD 1 - AS	
R2041	IO		035		1/20 TO CAD 1 - AS	
R2042	IO		036		1/20 TO CAD 1 - AS	
R2043	IO		037		1/20 TO CAD 1 - AS	
R2050	IO		038		1/20 TO CAD 1 - AS	
R2051	IO		039		1/20 TO CAD 1 - AS	
R2052	IO		040		1/20 TO CAD 1 - AS	
R2053	IO		041		1/20 TO CAD 1 - AS	
R2060	IO		047		1/20 TO CAD 1 - AT	
R2061	IO		048		1/20 TO CAD 1 - AT	
R2062	IO		049		1/20 TO CAD 1 - AT	
R2063	IO		050		1/20 TO CAD 1 - AT	
R2070	IO		051		1/20 TO CAD 1 - AT	
R2071	IO		052		1/20 TO CAD 1 - AT	
R2072	IO		053		1/20 TO CAD 1 - AT	
R2073	IO		054		1/20 TO CAD 1 - AT	

SYMBOL NO. 19

TERMINAL FIELD

DESIG	EQPT LOC	CODE	ELEM IDENT	OPT
TF	04-115	TERMINAL FIELD	A	

LEAD DESIG	FUNC	TERM. MOD	TERM.	TERM. OPT	DESTINATION	NOTE
T2000	IO		002		1/20 TO CAD 1 - AQ	
T2001	IO		003		1/20 TO CAD 1 - AQ	
T2002	IO		004		1/20 TO CAD 1 - AQ	
T2003	IO		005		1/20 TO CAD 1 - AQ	
T2010	IO		006		1/20 TO CAD 1 - AQ	
T2011	IO		007		1/20 TO CAD 1 - AQ	
T2012	IO		008		1/20 TO CAD 1 - AQ	
T2013	IO		009		1/20 TO CAD 1 - AQ	
T2020	IO		015		1/20 TO CAD 1 - AR	
T2021	IO		016		1/20 TO CAD 1 - AR	
T2022	IO		017		1/20 TO CAD 1 - AR	
T2023	IO		018		1/20 TO CAD 1 - AR	
T2030	IO		019		1/20 TO CAD 1 - AR	
T2031	IO		020		1/20 TO CAD 1 - AR	
T2032	IO		021		1/20 TO CAD 1 - AR	
T2033	IO		022		1/20 TO CAD 1 - AR	
T2040	IO		034		1/20 TO CAD 1 - AS	
T2041	IO		035		1/20 TO CAD 1 - AS	
T2042	IO		036		1/20 TO CAD 1 - AS	
T2043	IO		037		1/20 TO CAD 1 - AS	
T2050	IO		038		1/20 TO CAD 1 - AS	
T2051	IO		039		1/20 TO CAD 1 - AS	
T2052	IO		040		1/20 TO CAD 1 - AS	
T2053	IO		041		1/20 TO CAD 1 - AS	
T2060	IO		047		1/20 TO CAD 1 - AT	
T2061	IO		048		1/20 TO CAD 1 - AT	
T2062	IO		049		1/20 TO CAD 1 - AT	
T2063	IO		050		1/20 TO CAD 1 - AT	
T2070	IO		051		1/20 TO CAD 1 - AT	
T2071	IO		052		1/20 TO CAD 1 - AT	
T2072	IO		053		1/20 TO CAD 1 - AT	
T2073	IO		054		1/20 TO CAD 1 - AT	

SYMBOL NO. 20

HALF GRID

DESIG	EQPT LOC	CODE	ELEM IDENT	OPT
GDXHG4	04-116	SEE NOTE 309	A	

LEAD DESIG	FUNC	TERM. MOD	TERM.	TERM. OPT	DESTINATION	NOTE
+300V04	IO		106		2/20	
+300V05	IO		006		2/20	
+5V04	IO		001		1/1	
+5V13	IO		101		1/1	
-48V03	PWR		003		1/20	
	PWR		004		1/23,1/51	
GRD04116	GRD		000			
	GRD		036			
	GRD		036			
	GRD		037			
	GRD		037			
	GRD		055			
	GRD		056			
	GRD		100			
	GRD		136			
	GRD		136			
	GRD		137			
	GRD		137			
	GRD		140			
	GRD		141			
	GRD		155			
	GRD		156			
	GRD		200			
	GRD		203			
	GRD		204			
	GRD		206			
	GRD		207			
	GRD		208			
	GRD		255			
	GRD		256			
	GRD		300			
	GRD		301			
	GRD		302			
	GRD		303			
	GRD		304			
	GRD		306			
	GRD		307			
	GRD		308			
	GRD		355			
	GRD		356			
RB0	IO		017		1/11	
RB11	IO		220		1/11	
RB12	IO		222		1/11	
RB14	IO		022		1/11	
RB16	IO		032		1/10	
RB18	IO		232		1/10	
RB2	IO		217		1/11	
RB21	IO		244		1/10	
RB23	IO		044		1/10	
RB25	IO		035		1/10	
RB27	IO		235		1/10	
RB28	IO		243		1/10	
RB30	IO		043		1/10	
RB33	IO		019		1/14	
RB35	IO		219		1/14	
RB36	IO		221		1/17	
RB38	IO		021		1/17	
RB40	IO		018		1/14	
RB42	IO		218		1/14	
RB43	IO		224		1/17	

SYMBOL NO. 20 (CONT)

HALF GRID

DESIG	EQPT LOC	CODE	ELEM IDENT	OPT
GDXHG4	04-116	SEE NOTE 309	A	

LEAD DESIG	FUNC	TERM. MOD	TERM.	TERM. OPT	DESTINATION	NOTE
RB47	IO		024		1/17	
RB49	IO		034		1/17	
RB5	IO		223		1/11	
RB51	IO		234		1/17	
RB52	IO		242		1/14	
RB54	IO		042		1/14	
RB56	IO		033		1/17	
RB58	IO		233		1/17	
RB61	IO		245		1/14	
RB63	IO		045		1/14	
RB7	IO		023		1/11	
RB9	IO		020		1/11	
R2000	IO		010		1/18	
R2001	IO		011		1/18	
R2002	IO		213		1/18	
R2003	IO		215		1/18	
R2010	IO		014		1/18	
R2011	IO		016		1/18	
R2012	IO		210		1/18	
R2013	IO		212		1/18	
R2020	IO		013		1/18	
R2021	IO		015		1/18	
R2022	IO		209		1/18	
R2023	IO		211		1/18	
R2030	IO		009		1/18	
R2031	IO		012		1/18	
R2032	IO		214		1/18	
R2033	IO		216		1/18	
R2040	IO		353		1/18	
R2041	IO		351		1/18	
R2042	IO		349		1/18	
R2043	IO		347		1/18	
R2050	IO		152		1/18	
R2051	IO		150		1/18	
R2052	IO		148		1/18	
R2053	IO		146		1/18	
R2060	IO		153		1/18	
R2061	IO		151		1/18	
R2062	IO		149		1/18	
R2063	IO		147		1/18	
R2070	IO		352		1/18	
R2071	IO		350		1/18	
R2072	IO		348		1/18	
R2073	IO		346		1/18	
TB0	IO		117		1/11	
TB11	IO		320		1/11	
TB12	IO		322		1/11	
TB14	IO		122		1/11	
TB16	IO		132		1/10	
TB18	IO		332		1/10	

PART OF FS 1

SYMBOL(S) 18 19 20

COPYRIGHT (C) 1987 AT&T
ALL RIGHTS RESERVED

LINE UNIT, MODEL 3

DWG SIZE C2

ISSUE 1

AT&T BELL LABORATORIES

SD-5D180-01

B1CM

PART OF FS 1

LU3 LOWER SHELF

SYMBOL NO. 20 (CONT)

HALF GRID

DESIG	EQPT LOC	CODE	ELEM IDENT	OPT
GDXHG4	04-116	SEE NOTE 309	A	

LEAD DESIG	FUNC	TERM. MOD	TERM.	TERM. OPT	DESTINATION	NOTE
TB2	IO		317		1/11	
TB21	IO		344		1/10	
TB23	IO		144		1/10	
TB25	IO		135		1/10	
TB27	IO		335		1/10	
TB28	IO		343		1/10	
TB30	IO		143		1/10	
TB33	IO		119		1/14	
TB35	IO		319		1/14	
TB36	IO		321		1/17	
TB38	IO		121		1/17	
TB40	IO		118		1/14	
TB42	IO		318		1/14	
TB45	IO		324		1/17	
TB47	IO		124		1/17	
TB49	IO		134		1/17	
TB5	IO		323		1/11	
TB51	IO		334		1/17	
TB52	IO		342		1/14	
TB54	IO		142		1/14	
TB56	IO		133		1/17	
TB58	IO		333		1/17	
TB61	IO		345		1/14	
TB63	IO		145		1/14	
TB7	IO		123		1/11	
TB9	IO		120		1/11	
T2000	IO		110		1/19	
T2001	IO		111		1/19	
T2002	IO		313		1/19	
T2003	IO		315		1/19	
T2010	IO		114		1/19	
T2011	IO		116		1/19	
T2012	IO		310		1/19	
T2013	IO		312		1/19	
T2020	IO		113		1/19	
T2021	IO		115		1/19	
T2022	IO		309		1/19	
T2023	IO		311		1/19	
T2030	IO		109		1/19	
T2031	IO		112		1/19	
T2032	IO		314		1/19	
T2033	IO		316		1/19	
T2040	IO		253		1/19	
T2041	IO		251		1/19	
T2042	IO		249		1/19	
T2043	IO		247		1/19	
T2050	IO		052		1/19	
T2051	IO		050		1/19	
T2052	IO		048		1/19	
T2053	IO		046		1/19	
T2060	IO		053		1/19	
T2061	IO		051		1/19	
T2062	IO		049		1/19	
T2063	IO		047		1/19	
T2070	IO		252		1/19	
T2071	IO		250		1/19	
T2072	IO		248		1/19	
T2073	IO		246		1/19	

SYMBOL NO. 20 (CONT)

HALF GRID

DESIG	EQPT LOC	CODE	ELEM IDENT	OPT
GDXHG4	04-116	SEE NOTE 309	A	

LEAD DESIG	FUNC	TERM. MOD	TERM.	TERM. OPT	DESTINATION	NOTE
0ASWG20	IO		237		1/9	
0CLG2	IO		241		1/9	
0DG2	IO		336		1/9	
0EG20	IO		341		1/9	
0PAG20	IO		236		1/9	
0SLG2	IO		240		1/9	
1ASWG20						
0256KHZ2	IO		038		1/9	
	IO		337		2/9	
1CLG2	IO		339		1/23,2/9	
1DG2	IO		238		1/23,2/9	
1EG20	IO		239		2/9	
1PAG20	IO		336		2/9	
1SLG2	IO		340		1/23,2/9	
1256KHZ2	IO		138		1/23,2/9	

SYMBOL NO. 21

TERMINAL FIELD

DESIG	EQPT LOC	CODE	ELEM IDENT	OPT
TF	04-122	TERMINAL FIELD	A	

LEAD DESIG	FUNC	TERM. MOD	TERM.	TERM. OPT	DESTINATION	NOTE
R2100	IO		002		1/23 TO CAD 1 - AU	
R2101	IO		003		1/23 TO CAD 1 - AU	
R2102	IO		004		1/23 TO CAD 1 - AU	
R2103	IO		005		1/23 TO CAD 1 - AU	
R2110	IO		006		1/23 TO CAD 1 - AU	
R2111	IO		007		1/23 TO CAD 1 - AU	
R2112	IO		008		1/23 TO CAD 1 - AU	
R2113	IO		009		1/23 TO CAD 1 - AU	
R2120	IO		015		1/23 TO CAD 1 - AV	
R2121	IO		016		1/23 TO CAD 1 - AV	
R2122	IO		017		1/23 TO CAD 1 - AV	
R2123	IO		018		1/23 TO CAD 1 - AV	
R2130	IO		019		1/23 TO CAD 1 - AV	
R2131	IO		020		1/23 TO CAD 1 - AV	
R2132	IO		021		1/23 TO CAD 1 - AV	
R2133	IO		022		1/23 TO CAD 1 - AV	
R2140	IO		034		1/23 TO CAD 1 - AW	
R2141	IO		035		1/23 TO CAD 1 - AW	

SYMBOL NO. 21 (CONT)

TERMINAL FIELD

DESIG	EQPT LOC	CODE	ELEM IDENT	OPT
TF	04-122	TERMINAL FIELD	A	

LEAD DESIG	FUNC	TERM. MOD	TERM.	TERM. OPT	DESTINATION	NOTE
R2142	IO		036		1/23 TO CAD 1 - AW	
R2143	IO		037		1/23 TO CAD 1 - AW	
R2150	IO		038		1/23 TO CAD 1 - AW	
R2151	IO		039		1/23 TO CAD 1 - AW	
R2152	IO		040		1/23 TO CAD 1 - AW	
R2153	IO		041		1/23 TO CAD 1 - AW	
R2160	IO		047		1/23 TO CAD 1 - AX	
R2161	IO		048		1/23 TO CAD 1 - AX	
R2162	IO		049		1/23 TO CAD 1 - AX	
R2163	IO		050		1/23 TO CAD 1 - AX	
R2170	IO		051		1/23 TO CAD 1 - AX	
R2171	IO		052		1/23 TO CAD 1 - AX	
R2172	IO		053		1/23 TO CAD 1 - AX	
R2173	IO		054		1/23 TO CAD 1 - AX	

SYMBOL NO. 22

TERMINAL FIELD

DESIG	EQPT LOC	CODE	ELEM IDENT	OPT
TF	04-123	TERMINAL FIELD	A	

LEAD DESIG	FUNC	TERM. MOD	TERM.	TERM. OPT	DESTINATION	NOTE
T2100	IO		002		1/23 TO CAD 1 - AU	
T2101	IO		003		1/23 TO CAD 1 - AU	
T2102	IO		004		1/23 TO CAD 1 - AU	
T2103	IO		005		1/23 TO CAD 1 - AU	
T2110	IO		006		1/23 TO CAD 1 - AU	
T2111	IO		007		1/23 TO CAD 1 - AU	
T2112	IO		008		1/23 TO CAD 1 - AU	
T2113	IO		009		1/23 TO CAD 1 - AU	
T2120	IO		015		1/23 TO CAD 1 - AV	
T2121	IO		016		1/23 TO CAD 1 - AV	
T2122	IO		017		1/23 TO CAD 1 - AV	
T2123	IO		018		1/23 TO CAD 1 - AV	

SYMBOL NO. 22 (CONT)

TERMINAL FIELD

DESIG	EQPT LOC	CODE	ELEM IDENT	OPT
TF	04-123	TERMINAL FIELD	A	

LEAD DESIG	FUNC	TERM. MOD	TERM.	TERM. OPT	DESTINATION	NOTE
T2130	IO		019		1/23 TO CAD 1 - AV	
T2131	IO		020		1/23 TO CAD 1 - AV	
T2132	IO		021		1/23 TO CAD 1 - AV	
T2133	IO		022		1/23 TO CAD 1 - AV	
T2140	IO		034		1/23 TO CAD 1 - AW	
T2141	IO		035		1/23 TO CAD 1 - AW	
T2142	IO		036		1/23 TO CAD 1 - AW	
T2143	IO		037		1/23 TO CAD 1 - AW	
T2150	IO		038		1/23 TO CAD 1 - AW	
T2151	IO		039		1/23 TO CAD 1 - AW	
T2152	IO		040		1/23 TO CAD 1 - AW	
T2153	IO		041		1/23 TO CAD 1 - AW	
T2160	IO		047		1/23 TO CAD 1 - AX	
T2161	IO		048		1/23 TO CAD 1 - AX	
T2162	IO		049		1/23 TO CAD 1 - AX	
T2163	IO		050		1/23 TO CAD 1 - AX	
T2170	IO		051		1/23 TO CAD 1 - AX	
T2171	IO		052		1/23 TO CAD 1 - AX	
T2172	IO		053		1/23 TO CAD 1 - AX	
T2173	IO		054		1/23 TO CAD 1 - AX	

PART OF FS 1

SYMBOL(S) 20 21 22

COPYRIGHT (c) 1987 AT&T
ALL RIGHTS RESERVED

LINE UNIT, MODEL 3

DWG SIZE C2

ISSUE 1

AT&T BELL LABORATORIES

SD-5D180-01

B1CN

PART OF FS 1

LU3 LOWER SHELF

SYMBOL NO. 23

HALF GRID

DESIG	EQPT LOC	CODE	ELEM IDENT	OPT
GDXHG5	04-124	SEE NOTE 309	A	

LEAD DESIG	FUNC	TERM. MOD	TERM.	TERM. OPT	DESTINATION	NOTE
+300V06	IO		106		2/23	
+300V07	IO		006		2/23	
+5V04	IO		001		1/1	
+5V13	IO		101		1/1	
-48V03	PWR		003		1/20	
	PWR		004		1/20	
GRD04124	GRD		000			
	GRD		036			
	GRD		036			
	GRD		037			
	GRD		037			
	GRD		055			
	GRD		056			
	GRD		100			
	GRD		136			
	GRD		136			
	GRD		137			
	GRD		137			
	GRD		140			
	GRD		141			
	GRD		155			
	GRD		156			
	GRD		200			
	GRD		203			
	GRD		204			
	GRD		206			
	GRD		207			
	GRD		208			
	GRD		255			
	GRD		256			
	GRD		300			
	GRD		301			
	GRD		302			
	GRD		303			
	GRD		304			
	GRD		306			
	GRD		307			
	GRD		308			
	GRD		355			
	GRD		356			
R81	IO		019		1/11	
R810	IO		218		1/11	
R813	IO		224		1/11	
R815	IO		024		1/11	
R817	IO		034		1/10	
R819	IO		234		1/10	
R820	IO		242		1/10	
R822	IO		042		1/10	
R824	IO		033		1/10	
R826	IO		233		1/10	
R829	IO		245		1/10	
R83	IO		219		1/11	
R831	IO		045		1/10	
R832	IO		017		1/17	
R834	IO		217		1/17	
R837	IO		223		1/14	
R839	IO		023		1/14	
R84	IO		221		1/11	
R841	IO		020		1/17	
R843	IO		220		1/17	

SYMBOL NO. 23 (CONT)

HALF GRID

DESIG	EQPT LOC	CODE	ELEM IDENT	OPT
GDXHG5	04-124	SEE NOTE 309	A	

LEAD DESIG	FUNC	TERM. MOD	TERM.	TERM. OPT	DESTINATION	NOTE
R844	IO		222		1/14	
R846	IO		022		1/14	
R848	IO		032		1/14	
R850	IO		232		1/14	
R853	IO		244		1/17	
R855	IO		044		1/17	
R857	IO		035		1/14	
R859	IO		235		1/14	
R86	IO		021		1/11	
R860	IO		243		1/17	
R862	IO		043		1/17	
R88	IO		018		1/11	
R2100	IO		010		1/21	
R2101	IO		011		1/21	
R2102	IO		213		1/21	
R2103	IO		215		1/21	
R2110	IO		014		1/21	
R2111	IO		016		1/21	
R2112	IO		210		1/21	
R2113	IO		212		1/21	
R2120	IO		013		1/21	
R2121	IO		015		1/21	
R2122	IO		209		1/21	
R2123	IO		211		1/21	
R2130	IO		009		1/21	
R2131	IO		012		1/21	
R2132	IO		214		1/21	
R2133	IO		216		1/21	
R2140	IO		353		1/21	
R2141	IO		351		1/21	
R2142	IO		349		1/21	
R2143	IO		347		1/21	
R2150	IO		152		1/21	
R2151	IO		150		1/21	
R2152	IO		148		1/21	
R2153	IO		146		1/21	
R2160	IO		153		1/21	
R2161	IO		151		1/21	
R2162	IO		149		1/21	
R2163	IO		147		1/21	
R2170	IO		352		1/21	
R2171	IO		350		1/21	
R2172	IO		348		1/21	
R2173	IO		346		1/21	
TB1	IO		119		1/11	
TB10	IO		318		1/11	
TB13	IO		324		1/11	
TB15	IO		124		1/11	
TB17	IO		134		1/10	
TB19	IO		334		1/10	
TB20	IO		342		1/10	
TB22	IO		142		1/10	
TB24	IO		133		1/10	
TB26	IO		333		1/10	
TB29	IO		345		1/10	
TB3	IO		319		1/11	
TB31	IO		145		1/10	
TB32	IO		117		1/17	
TB34	IO		317		1/17	
TB37	IO		323		1/14	

SYMBOL NO. 23 (CONT)

HALF GRID

DESIG	EQPT LOC	CODE	ELEM IDENT	OPT
GDXHG5	04-124	SEE NOTE 309	A	

LEAD DESIG	FUNC	TERM. MOD	TERM.	TERM. OPT	DESTINATION	NOTE
TB39	IO		123		1/14	
TB4	IO		321		1/11	
TB41	IO		120		1/17	
TB43	IO		320		1/17	
TB44	IO		322		1/14	
TB46	IO		122		1/14	
TB48	IO		142		1/14	
TB50	IO		332		1/14	
TB53	IO		344		1/17	
TB55	IO		144		1/17	
TB57	IO		135		1/14	
TB59	IO		335		1/14	
TB6	IO		121		1/11	
TB60	IO		343		1/17	
TB62	IO		143		1/17	
TB8	IO		118		1/11	
TZ100	IO		110		1/22	
TZ101	IO		111		1/22	
TZ102	IO		313		1/22	
TZ103	IO		315		1/22	
TZ110	IO		114		1/22	
TZ111	IO		116		1/22	
TZ112	IO		310		1/22	
TZ113	IO		312		1/22	
TZ120	IO		113		1/22	
TZ121	IO		115		1/22	
TZ122	IO		309		1/22	
TZ123	IO		311		1/22	
TZ130	IO		109		1/22	
TZ131	IO		112		1/22	
TZ132	IO		314		1/22	
TZ133	IO		316		1/22	
TZ140	IO		253		1/22	
TZ141	IO		251		1/22	
TZ142	IO		249		1/22	
TZ143	IO		247		1/22	
TZ150	IO		052		1/22	
TZ151	IO		050		1/22	
TZ152	IO		048		1/22	
TZ153	IO		046		1/22	
TZ160	IO		053		1/22	
TZ161	IO		051		1/22	
TZ162	IO		049		1/22	
TZ163	IO		047		1/22	
TZ170	IO		252		1/22	
TZ171	IO		250		1/22	
TZ172	IO		248		1/22	
TZ173	IO		246		1/22	
0ASHG21	IO		237		1/9	
0CLG2	IO		241		1/9	
0DG2	IO		338		1/9	
0EG21	IO		341		1/9	
0PAG21	IO		236		1/9	
0SLG2	IO		240		1/9	
0256KHZ2	IO		038		1/9	
1ASHG21	IO		337		2/9	
1CLG2	IO		339		1/20	
1DG2	IO		238		1/20	
1EG21	IO		239		2/9	
1PAG21	IO		336		2/9	

SYMBOL NO. 23 (CONT)

HALF GRID

DESIG	EQPT LOC	CODE	ELEM IDENT	OPT
GDXHG5	04-124	SEE NOTE 309	A	

LEAD DESIG	FUNC	TERM. MOD	TERM.	TERM. OPT	DESTINATION	NOTE
1SLG2	IO		340		1/20	
1256KHZ2	IO		138		1/20	

PART OF FS 1

SYMBOL(S) 23

COPYRIGHT (C) 1987 AT&T
ALL RIGHTS RESERVED

LINE UNIT, MODEL 3

DWG SIZE C2 | ISSUE 1

AT&T BELL LABORATORIES | SD-5D180-01 | B1CP

PART OF FS 1

LU3 LOWER SHELF

SYMBOL NO. 24

TERMINAL FIELD

DESIG	EQPT LOC	CODE	ELEM IDENT	OPT
TF	04-130	TERMINAL FIELD	A	

LEAD DESIG	FUNC	TERM. MOD	TERM.	TERM. OPT	DESTINATION	NOTE
R4000	IO		002		1/26 TO CAD 1 - BG	
R4001	IO		003		1/26 TO CAD 1 - BG	
R4002	IO		004		1/26 TO CAD 1 - BG	
R4003	IO		005		1/26 TO CAD 1 - BG	
R4010	IO		006		1/26 TO CAD 1 - BG	
R4011	IO		007		1/26 TO CAD 1 - BG	
R4012	IO		008		1/26 TO CAD 1 - BG	
R4013	IO		009		1/26 TO CAD 1 - BG	
R4020	IO		015		1/26 TO CAD 1 - BH	
R4021	IO		016		1/26 TO CAD 1 - BH	
R4022	IO		017		1/26 TO CAD 1 - BH	
R4023	IO		018		1/26 TO CAD 1 - BH	
R4030	IO		019		1/26 TO CAD 1 - BH	
R4031	IO		020		1/26 TO CAD 1 - BH	
R4032	IO		021		1/26 TO CAD 1 - BH	
R4033	IO		022		1/26 TO CAD 1 - BH	
R4040	IO		034		1/26 TO CAD 1 - BI	
R4041	IO		035		1/26 TO CAD 1 - BI	
R4042	IO		036		1/26 TO CAD 1 - BI	
R4043	IO		037		1/26 TO CAD 1 - BI	
R4050	IO		038		1/26 TO CAD 1 - BI	
R4051	IO		039		1/26 TO CAD 1 - BI	
R4052	IO		040		1/26 TO CAD 1 - BI	
R4053	IO		041		1/26 TO CAD 1 - BI	
R4060	IO		047		1/26 TO CAD 1 - BJ	
R4061	IO		048		1/26 TO CAD 1 - BJ	
R4062	IO		049		1/26 TO CAD 1 - BJ	
R4063	IO		050		1/26 TO CAD 1 - BJ	
R4070	IO		051		1/26 TO CAD 1 - BJ	
R4071	IO		052		1/26 TO CAD 1 - BJ	
R4072	IO		053		1/26 TO CAD 1 - BJ	
R4073	IO		054		1/26 TO CAD 1 - BJ	

SYMBOL NO. 25

TERMINAL FIELD

DESIG	EQPT LOC	CODE	ELEM IDENT	OPT
TF	04-131	TERMINAL FIELD	A	

LEAD DESIG	FUNC	TERM. MOD	TERM.	TERM. OPT	DESTINATION	NOTE
T4000	IO		002		1/26 TO CAD 1 - BG	
T4001	IO		003		1/26 TO CAD 1 - BG	
T4002	IO		004		1/26 TO CAD 1 - BG	
T4003	IO		005		1/26 TO CAD 1 - BG	
T4010	IO		006		1/26 TO CAD 1 - BG	
T4011	IO		007		1/26 TO CAD 1 - BG	
T4012	IO		008		1/26 TO CAD 1 - BG	
T4013	IO		009		1/26 TO CAD 1 - BG	
T4020	IO		015		1/26 TO CAD 1 - BH	
T4021	IO		016		1/26 TO CAD 1 - BH	
T4022	IO		017		1/26 TO CAD 1 - BH	
T4023	IO		018		1/26 TO CAD 1 - BH	
T4030	IO		019		1/26 TO CAD 1 - BH	
T4031	IO		020		1/26 TO CAD 1 - BH	
T4032	IO		021		1/26 TO CAD 1 - BH	
T4033	IO		022		1/26 TO CAD 1 - BH	
T4040	IO		034		1/26 TO CAD 1 - BI	
T4041	IO		035		1/26 TO CAD 1 - BI	
T4042	IO		036		1/26 TO CAD 1 - BI	
T4043	IO		037		1/26 TO CAD 1 - BI	
T4050	IO		038		1/26 TO CAD 1 - BI	
T4051	IO		039		1/26 TO CAD 1 - BI	
T4052	IO		040		1/26 TO CAD 1 - BI	
T4053	IO		041		1/26 TO CAD 1 - BI	
T4060	IO		047		1/26 TO CAD 1 - BJ	
T4061	IO		048		1/26 TO CAD 1 - BJ	
T4062	IO		049		1/26 TO CAD 1 - BJ	
T4063	IO		050		1/26 TO CAD 1 - BJ	
T4070	IO		051		1/26 TO CAD 1 - BJ	
T4071	IO		052		1/26 TO CAD 1 - BJ	
T4072	IO		053		1/26 TO CAD 1 - BJ	
T4073	IO		054		1/26 TO CAD 1 - BJ	

SYMBOL NO. 26

HALF GRID

DESIG	EQPT LOC	CODE	ELEM IDENT	OPT
GDXHG8	04-132	SEE NOTE 309	A	

LEAD DESIG	FUNC	TERM. MOD	TERM.	TERM. OPT	DESTINATION	NOTE
+300V08	IO		106		2/26	
+300V09	IO		006		2/26	
+5V04	IO		001		1/1	
+5V13	IO		101		1/1	
-48V04	PWR		004		1/26	
	PWR		003		1/29,1/53	
GRD04132	GRD		000			
	GRD		036			
	GRD		036			
	GRD		037			
	GRD		037			
	GRD		055			
	GRD		056			
	GRD		100			
	GRD		136			
	GRD		136			
	GRD		137			
	GRD		137			
	GRD		140			
	GRD		141			
	GRD		155			
	GRD		156			
	GRD		200			
	GRD		203			
	GRD		204			
	GRD		206			
	GRD		207			
	GRD		208			
	GRD		255			
	GRD		256			
	GRD		300			
	GRD		301			
	GRD		302			
	GRD		303			
	GRD		304			
	GRD		306			
	GRD		307			
	GRD		308			
	GRD		355			
	GRD		356			
RB0	IO		017		1/11	
RB11	IO		220		1/11	
RB13	IO		224		1/11	
RB15	IO		024		1/11	
RB16	IO		032		1/10	
RB18	IO		232		1/10	
RB2	IO		217		1/11	
RB20	IO		242		1/10	
RB22	IO		042		1/10	
RB25	IO		035		1/10	
RB27	IO		235		1/10	
RB29	IO		245		1/10	
RB31	IO		045		1/10	
RB33	IO		019		1/14	
RB35	IO		219		1/14	
RB37	IO		223		1/14	
RB39	IO		023		1/14	
RB4	IO		221		1/11	
RB40	IO		018		1/14	
RB42	IO		218		1/14	

SYMBOL NO. 26 (CONT)

HALF GRID

DESIG	EQPT LOC	CODE	ELEM IDENT	OPT
GDXHG8	04-132	SEE NOTE 309	A	

LEAD DESIG	FUNC	TERM. MOD	TERM.	TERM. OPT	DESTINATION	NOTE
RB44	IO		222		1/14	
RB46	IO		022		1/14	
RB49	IO		034		1/17	
RB51	IO		234		1/17	
RB53	IO		244		1/17	
RB55	IO		044		1/17	
RB56	IO		033		1/17	
RB58	IO		233		1/17	
RB6	IO		021		1/11	
RB60	IO		243		1/17	
RB62	IO		043		1/17	
RB9	IO		020		1/11	
R4000	IO		010		1/24	
R4001	IO		011		1/24	
R4002	IO		213		1/24	
R4003	IO		215		1/24	
R4010	IO		014		1/24	
R4011	IO		016		1/24	
R4012	IO		210		1/24	
R4013	IO		212		1/24	
R4020	IO		013		1/24	
R4021	IO		015		1/24	
R4022	IO		209		1/24	
R4023	IO		211		1/24	
R4030	IO		009		1/24	
R4031	IO		012		1/24	
R4032	IO		214		1/24	
R4033	IO		216		1/24	
R4040	IO		353		1/24	
R4041	IO		351		1/24	
R4042	IO		349		1/24	
R4043	IO		347		1/24	
R4050	IO		152		1/24	
R4051	IO		150		1/24	
R4052	IO		148		1/24	
R4053	IO		146		1/24	
R4060	IO		153		1/24	
R4061	IO		151		1/24	
R4062	IO		149		1/24	
R4063	IO		147		1/24	
R4070	IO		352		1/24	
R4071	IO		350		1/24	
R4072	IO		348		1/24	
R4073	IO		346		1/24	
TB0	IO		117		1/11	
TB11	IO		320		1/11	
TB13	IO		324		1/11	
TB15	IO		124		1/11	
TB16	IO		132		1/10	
TB18	IO		332		1/10	

PART OF FS 1

SYMBOL(S) 24 25 26

COPYRIGHT (c) 1987 AT&T
ALL RIGHTS RESERVED

LINE UNIT, MODEL 3	DWG SIZE C2	ISSUE 1
AT&T BELL LABORATORIES	SD-5D180-01	B1CR

PART OF FS 1

LUS LOWER SHELF

SYMBOL NO. 26 (CONT)

HALF GRID

DESIG	EQPT LOC	CODE	ELEM IDENT	OPT
GD04GB	04-132	SEE NOTE 309	A	

LEAD DESIG	FUNC	TERM. MOD	TERM.	TERM. OPT	DESTINATION	NOTE
TB2	10		317		1/11	
TB20	10		342		1/10	
TB22	10		142		1/10	
TB25	10		135		1/10	
TB27	10		335		1/10	
TB29	10		345		1/10	
TB31	10		145		1/10	
TB33	10		110		1/14	
TB35	10		310		1/14	
TB37	10		323		1/14	
TB39	10		123		1/14	
TB4	10		321		1/11	
TB40	10		118		1/14	
TB42	10		318		1/14	
TB44	10		322		1/14	
TB46	10		122		1/14	
TB49	10		134		1/17	
TB51	10		334		1/17	
TB53	10		344		1/17	
TB55	10		144		1/17	
TB56	10		133		1/17	
TB58	10		333		1/17	
TB6	10		121		1/11	
TB60	10		343		1/17	
TB62	10		143		1/17	
TB9	10		120		1/11	
T4000	10		110		1/25	
T4001	10		111		1/25	
T4002	10		313		1/25	
T4003	10		315		1/25	
T4010	10		114		1/25	
T4011	10		116		1/25	
T4012	10		316		1/25	
T4013	10		312		1/25	
T4020	10		113		1/25	
T4021	10		115		1/25	
T4022	10		309		1/25	
T4023	10		311		1/25	
T4030	10		109		1/25	
T4031	10		112		1/25	
T4032	10		314		1/25	
T4033	10		310		1/25	
T4040	10		253		1/25	
T4041	10		251		1/25	
T4042	10		249		1/25	
T4043	10		247		1/25	
T4050	10		952		1/25	
T4051	10		950		1/25	
T4052	10		948		1/25	
T4053	10		946		1/25	
T4060	10		953		1/25	
T4061	10		951		1/25	
T4062	10		949		1/25	
T4063	10		947		1/25	
T4070	10		252		1/25	
T4071	10		250		1/25	
T4072	10		248		1/25	
T4073	10		246		1/25	

SYMBOL NO. 26 (CONT)

HALF GRID

DESIG	EQPT LOC	CODE	ELEM IDENT	OPT
GD04GB	04-132	SEE NOTE 309	A	

LEAD DESIG	FUNC	TERM. MOD	TERM.	TERM. OPT	DESTINATION	NOTE
BASMG40	10		237		1/9	
0CLG4	10		241		1/9	
0DG4	10		338		1/9	
0EG40	10		341		1/9	
0PAG40	10		236		1/9	
0SLG4	10		240		1/9	
625MOH24	10		038		1/9	
1ASMG40	10		337		2/9	
1CLG4	10		339		1/29,2/9	
1DG4	10		238		1/29,2/9	
1EG40	10		239		2/9	
1PAG40	10		336		2/9	
1SLG4	10		340		1/29,2/9	
1256MOH24	10		138		1/29,2/9	

SYMBOL NO. 27

TERMINAL FIELD

DESIG	EQPT LOC	CODE	ELEM IDENT	OPT
TF	04-138	TERMINAL FIELD	A	

LEAD DESIG	FUNC	TERM. MOD	TERM.	TERM. OPT	DESTINATION	NOTE
R4100	10		002		1/29 TO CAD 1 - BK	
R4101	10		003		1/29 TO CAD 1 - BK	
R4102	10		004		1/29 TO CAD 1 - BK	
R4103	10		005		1/29 TO CAD 1 - BK	
R4110	10		006		1/29 TO CAD 1 - BK	
R4111	10		007		1/29 TO CAD 1 - BK	
R4112	10		008		1/29 TO CAD 1 - BK	
R4113	10		009		1/29 TO CAD 1 - BK	
R4120	10		015		1/29 TO CAD 1 - BL	
R4121	10		016		1/29 TO CAD 1 - BL	
R4122	10		017		1/29 TO CAD 1 - BL	
R4123	10		018		1/29 TO CAD 1 - BL	
R4130	10		019		1/29 TO CAD 1 - BL	
R4131	10		020		1/29 TO CAD 1 - BL	
R4132	10		021		1/29 TO CAD 1 - BL	
R4133	10		022		1/29 TO CAD 1 - BL	
R4140	10		034		1/29 TO CAD 1 - BR	
R4141	10		035		1/29 TO CAD 1 - BR	

SYMBOL NO. 27 (CONT)

TERMINAL FIELD

DESIG	EQPT LOC	CODE	ELEM IDENT	OPT
TF	04-138	TERMINAL FIELD	A	

LEAD DESIG	FUNC	TERM. MOD	TERM.	TERM. OPT	DESTINATION	NOTE
R4142	10		036		1/29 TO CAD 1 - BR	
R4143	10		037		1/29 TO CAD 1 - BR	
R4150	10		038		1/29 TO CAD 1 - BR	
R4151	10		039		1/29 TO CAD 1 - BR	
R4152	10		040		1/29 TO CAD 1 - BR	
R4153	10		041		1/29 TO CAD 1 - BR	
R4160	10		047		1/29 TO CAD 1 - BR	
R4161	10		048		1/29 TO CAD 1 - BR	
R4162	10		049		1/29 TO CAD 1 - BR	
R4163	10		050		1/29 TO CAD 1 - BR	
R4170	10		051		1/29 TO CAD 1 - BR	
R4171	10		052		1/29 TO CAD 1 - BR	
R4172	10		053		1/29 TO CAD 1 - BR	
R4173	10		054		1/29 TO CAD 1 - BR	

SYMBOL NO. 28

TERMINAL FIELD

DESIG	EQPT LOC	CODE	ELEM IDENT	OPT
TF	04-139	TERMINAL FIELD	A	

LEAD DESIG	FUNC	TERM. MOD	TERM.	TERM. OPT	DESTINATION	NOTE
T4100	10		002		1/29 TO CAD 1 - BK	
T4101	10		003		1/29 TO CAD 1 - BK	
T4102	10		004		1/29 TO CAD 1 - BK	
T4103	10		005		1/29 TO CAD 1 - BK	
T4110	10		006		1/29 TO CAD 1 - BK	
T4111	10		007		1/29 TO CAD 1 - BK	
T4112	10		008		1/29 TO CAD 1 - BK	
T4113	10		009		1/29 TO CAD 1 - BK	
T4120	10		015		1/29 TO CAD 1 - BL	
T4121	10		016		1/29 TO CAD 1 - BL	
T4122	10		017		1/29 TO CAD 1 - BL	
T4123	10		018		1/29 TO CAD 1 - BL	

SYMBOL NO. 28 (CONT)

TERMINAL FIELD

DESIG	EQPT LOC	CODE	ELEM IDENT	OPT
TF	04-139	TERMINAL FIELD	A	

LEAD DESIG	FUNC	TERM. MOD	TERM.	TERM. OPT	DESTINATION	NOTE
T4130	10		019		1/29 TO CAD 1 - BL	
T4131	10		020		1/29 TO CAD 1 - BL	
T4132	10		021		1/29 TO CAD 1 - BL	
T4133	10		022		1/29 TO CAD 1 - BL	
T4140	10		034		1/29 TO CAD 1 - BR	
T4141	10		035		1/29 TO CAD 1 - BR	
T4142	10		036		1/29 TO CAD 1 - BR	
T4143	10		037		1/29 TO CAD 1 - BR	
T4150	10		038		1/29 TO CAD 1 - BR	
T4151	10		039		1/29 TO CAD 1 - BR	
T4152	10		040		1/29 TO CAD 1 - BR	
T4153	10		041		1/29 TO CAD 1 - BR	
T4160	10		047		1/29 TO CAD 1 - BR	
T4161	10		048		1/29 TO CAD 1 - BR	
T4162	10		049		1/29 TO CAD 1 - BR	
T4163	10		050		1/29 TO CAD 1 - BR	
T4170	10		051		1/29 TO CAD 1 - BR	
T4171	10		052		1/29 TO CAD 1 - BR	
T4172	10		053		1/29 TO CAD 1 - BR	
T4173	10		054		1/29 TO CAD 1 - BR	

PART OF FS 1
SYMBOL(S) 26 27 28

COPYRIGHT © 1987 AT&T
ALL RIGHTS RESERVED

LINE UNIT, MODEL 3

DWG SIZE	ISSUE
d2	1

AT&T BELL LABORATORIES	SD-50180-01	81CT

PART OF FS 1

LU3 LOWER SHELF

SYMBOL NO. 29

HALF GRID

DESIG	EQPT LOC	CODE	ELEM IDENT	OPT
GDXHG9	04-140	SEE NOTE 309	A	

LEAD DESIG	FUNC	TERM. MOD	TERM.	TERM. OPT	DESTINATION	NOTE
+300V10	IO		106		2/29	
+300V11	IO		006		2/29	
+5V04	IO		001		1/1	
+5V13	IO		101		1/1	
-48V04	PWR		003		1/26	
	PWR		004		1/26	
GRD04140	GRD		000			
	GRD		036			
	GRD		036			
	GRD		037			
	GRD		037			
	GRD		055			
	GRD		056			
	GRD		100			
	GRD		136			
	GRD		136			
	GRD		137			
	GRD		137			
	GRD		140			
	GRD		141			
	GRD		155			
	GRD		156			
	GRD		200			
	GRD		203			
	GRD		204			
	GRD		206			
	GRD		207			
	GRD		208			
	GRD		255			
	GRD		256			
	GRD		300			
	GRD		301			
	GRD		302			
	GRD		303			
	GRD		304			
	GRD		306			
	GRD		307			
	GRD		308			
	GRD		355			
	GRD		356			
RB1	IO		019		1/11	
RB10	IO		218		1/11	
RB12	IO		222		1/11	
RB14	IO		022		1/11	
RB17	IO		034		1/10	
RB19	IO		234		1/10	
RB21	IO		244		1/10	
RB23	IO		044		1/10	
RB24	IO		033		1/10	
RB26	IO		233		1/10	
RB28	IO		243		1/10	
RB3	IO		219		1/11	
RB30	IO		043		1/10	
RB32	IO		017		1/17	
RB34	IO		217		1/17	
RB36	IO		221		1/17	
RB38	IO		021		1/17	
RB41	IO		020		1/17	
RB43	IO		220		1/17	
RB45	IO		224		1/17	

SYMBOL NO. 29 (CONT)

HALF GRID

DESIG	EQPT LOC	CODE	ELEM IDENT	OPT
GDXHG9	04-140	SEE NOTE 309	A	

LEAD DESIG	FUNC	TERM. MOD	TERM.	TERM. OPT	DESTINATION	NOTE
RB47	IO		024		1/17	
RB48	IO		032		1/14	
RB5	IO		223		1/11	
RB50	IO		232		1/14	
RB52	IO		242		1/14	
RB54	IO		042		1/14	
RB57	IO		035		1/14	
RB59	IO		235		1/14	
RB61	IO		245		1/14	
RB63	IO		045		1/14	
RB7	IO		023		1/11	
RB8	IO		018		1/11	
R4100	IO		010		1/27	
R4101	IO		011		1/27	
R4102	IO		213		1/27	
R4103	IO		215		1/27	
R4110	IO		014		1/27	
R4111	IO		016		1/27	
R4112	IO		210		1/27	
R4113	IO		212		1/27	
R4120	IO		013		1/27	
R4121	IO		015		1/27	
R4122	IO		209		1/27	
R4123	IO		211		1/27	
R4130	IO		009		1/27	
R4131	IO		012		1/27	
R4132	IO		214		1/27	
R4133	IO		216		1/27	
R4140	IO		353		1/27	
R4141	IO		351		1/27	
R4142	IO		349		1/27	
R4143	IO		347		1/27	
R4150	IO		152		1/27	
R4151	IO		150		1/27	
R4152	IO		148		1/27	
R4153	IO		146		1/27	
R4160	IO		153		1/27	
R4161	IO		151		1/27	
R4162	IO		149		1/27	
R4163	IO		147		1/27	
R4170	IO		352		1/27	
R4171	IO		350		1/27	
R4172	IO		348		1/27	
R4173	IO		346		1/27	
TB1	IO		119		1/11	
TB10	IO		318		1/11	
TB12	IO		322		1/11	
TB14	IO		122		1/11	
TB17	IO		134		1/10	
TB19	IO		334		1/10	
TB21	IO		344		1/10	
TB23	IO		144		1/10	
TB24	IO		133		1/10	
TB26	IO		333		1/10	
TB28	IO		343		1/10	
TB3	IO		319		1/11	
TB30	IO		143		1/10	
TB32	IO		117		1/17	
TB34	IO		317		1/17	
TB36	IO		321		1/17	

SYMBOL NO. 29 (CONT)

HALF GRID

DESIG	EQPT LOC	CODE	ELEM IDENT	OPT
GDXHG9	04-140	SEE NOTE 309	A	

LEAD DESIG	FUNC	TERM. MOD	TERM.	TERM. OPT	DESTINATION	NOTE
TB38	IO		121		1/17	
TB41	IO		120		1/17	
TB43	IO		320		1/17	
TB45	IO		324		1/17	
TB47	IO		124		1/17	
TB48	IO		132		1/14	
TB5	IO		323		1/11	
TB50	IO		332		1/14	
TB52	IO		342		1/14	
TB54	IO		142		1/14	
TB57	IO		135		1/14	
TB59	IO		335		1/14	
TB61	IO		345		1/14	
TB63	IO		145		1/14	
TB7	IO		123		1/11	
TB8	IO		118		1/11	
T4100	IO		110		1/28	
T4101	IO		111		1/28	
T4102	IO		313		1/28	
T4103	IO		315		1/28	
T4110	IO		114		1/28	
T4111	IO		116		1/28	
T4112	IO		310		1/28	
T4113	IO		312		1/28	
T4120	IO		113		1/28	
T4121	IO		115		1/28	
T4122	IO		309		1/28	
T4123	IO		311		1/28	
T4130	IO		109		1/28	
T4131	IO		112		1/28	
T4132	IO		314		1/28	
T4133	IO		316		1/28	
T4140	IO		253		1/28	
T4141	IO		251		1/28	
T4142	IO		249		1/28	
T4143	IO		247		1/28	
T4150	IO		052		1/28	
T4151	IO		050		1/28	
T4152	IO		048		1/28	
T4153	IO		046		1/28	
T4160	IO		053		1/28	
T4161	IO		051		1/28	
T4162	IO		049		1/28	
T4163	IO		047		1/28	
T4170	IO		252		1/28	
T4171	IO		250		1/28	
T4172	IO		248		1/28	
T4173	IO		246		1/28	
0ASWG41	IO		237		1/9	
0CLG4	IO		241		1/9	
0DG4	IO		338		1/9	
0EG41	IO		341		1/9	
0PAG41	IO		236		1/9	
0SLG4	IO		240		1/9	
0256KHZ4	IO		038		1/9	
1ASWG41	IO		337		2/9	
1CLG4	IO		339		1/26	
1DG4	IO		238		1/26	
1EG41	IO		239		2/9	
1PAG41	IO		336		2/9	

SYMBOL NO. 29 (CONT)

HALF GRID

DESIG	EQPT LOC	CODE	ELEM IDENT	OPT
GDXHG9	04-140	SEE NOTE 309	A	

LEAD DESIG	FUNC	TERM. MOD	TERM.	TERM. OPT	DESTINATION	NOTE
1SLG4	IO		340		1/26	
1256KHZ4	IO		138		1/26	

PART OF FS 1

SYMBOL(S) 29

COPYRIGHT (c) 1987 AT&T
ALL RIGHTS RESERVED

LINE UNIT, MODEL 3

DWG SIZE	ISSUE
D2	1

AT&T BELL LABORATORIES	SD-5D180-01	B1CU

PART OF FS 1

LU3 LOWER SHELF

SYMBOL NO. 30

TERMINAL FIELD

DESIG	EQPT LOC	CODE	ELEM IDENT	OPT
TF	04-146	TERMINAL FIELD	A	

LEAD DESIG	FUNC	TERM. MOD	TERM.	TERM. OPT	DESTINATION	NOTE
R6000	IO		002		1/32 TO CAD 1 - BW	
R6001	IO		003		1/32 TO CAD 1 - BW	
R6002	IO		004		1/32 TO CAD 1 - BW	
R6003	IO		005		1/32 TO CAD 1 - BW	
R6010	IO		006		1/32 TO CAD 1 - BW	
R6011	IO		007		1/32 TO CAD 1 - BW	
R6012	IO		008		1/32 TO CAD 1 - BW	
R6013	IO		009		1/32 TO CAD 1 - BW	
R6020	IO		015		1/32 TO CAD 1 - BX	
R6021	IO		016		1/32 TO CAD 1 - BX	
R6022	IO		017		1/32 TO CAD 1 - BX	
R6023	IO		018		1/32 TO CAD 1 - BX	
R6030	IO		019		1/32 TO CAD 1 - BX	
R6031	IO		020		1/32 TO CAD 1 - BX	
R6032	IO		021		1/32 TO CAD 1 - BX	
R6033	IO		022		1/32 TO CAD 1 - BX	
R6040	IO		034		1/32 TO CAD 1 - BY	
R6041	IO		035		1/32 TO CAD 1 - BY	
R6042	IO		036		1/32 TO CAD 1 - BY	
R6043	IO		037		1/32 TO CAD 1 - BY	
R6050	IO		038		1/32 TO CAD 1 - BY	
R6051	IO		039		1/32 TO CAD 1 - BY	
R6052	IO		040		1/32 TO CAD 1 - BY	
R6053	IO		041		1/32 TO CAD 1 - BY	
R6060	IO		047		1/32 TO CAD 1 - BZ	
R6061	IO		048		1/32 TO CAD 1 - BZ	
R6062	IO		049		1/32 TO CAD 1 - BZ	
R6063	IO		050		1/32 TO CAD 1 - BZ	
R6070	IO		051		1/32 TO CAD 1 - BZ	
R6071	IO		052		1/32 TO CAD 1 - BZ	
R6072	IO		053		1/32 TO CAD 1 - BZ	
R6073	IO		054		1/32 TO CAD 1 - BZ	

SYMBOL NO. 31

TERMINAL FIELD

DESIG	EQPT LOC	CODE	ELEM IDENT	OPT
TF	04-147	TERMINAL FIELD	A	

LEAD DESIG	FUNC	TERM. MOD	TERM.	TERM. OPT	DESTINATION	NOTE
T6000	IO		002		1/32 TO CAD 1 - BW	
T6001	IO		003		1/32 TO CAD 1 - BW	
T6002	IO		004		1/32 TO CAD 1 - BW	
T6003	IO		005		1/32 TO CAD 1 - BW	
T6010	IO		006		1/32 TO CAD 1 - BW	
T6011	IO		007		1/32 TO CAD 1 - BW	
T6012	IO		008		1/32 TO CAD 1 - BW	
T6013	IO		009		1/32 TO CAD 1 - BW	
T6020	IO		015		1/32 TO CAD 1 - BX	
T6021	IO		016		1/32 TO CAD 1 - BX	
T6022	IO		017		1/32 TO CAD 1 - BX	
T6023	IO		018		1/32 TO CAD 1 - BX	
T6030	IO		019		1/32 TO CAD 1 - BX	
T6031	IO		020		1/32 TO CAD 1 - BX	
T6032	IO		021		1/32 TO CAD 1 - BX	
T6033	IO		022		1/32 TO CAD 1 - BX	
T6040	IO		034		1/32 TO CAD 1 - BY	
T6041	IO		035		1/32 TO CAD 1 - BY	
T6042	IO		036		1/32 TO CAD 1 - BY	
T6043	IO		037		1/32 TO CAD 1 - BY	
T6050	IO		038		1/32 TO CAD 1 - BY	
T6051	IO		039		1/32 TO CAD 1 - BY	
T6052	IO		040		1/32 TO CAD 1 - BY	
T6053	IO		041		1/32 TO CAD 1 - BY	
T6060	IO		047		1/32 TO CAD 1 - BZ	
T6061	IO		048		1/32 TO CAD 1 - BZ	
T6062	IO		049		1/32 TO CAD 1 - BZ	
T6063	IO		050		1/32 TO CAD 1 - BZ	
T6070	IO		051		1/32 TO CAD 1 - BZ	
T6071	IO		052		1/32 TO CAD 1 - BZ	
T6072	IO		053		1/32 TO CAD 1 - BZ	
T6073	IO		054		1/32 TO CAD 1 - BZ	

SYMBOL NO. 32

HALF GRID

DESIG	EQPT LOC	CODE	ELEM IDENT	OPT
GDXHG12	04-148	SEE NOTE 309	A	

LEAD DESIG	FUNC	TERM. MOD	TERM.	TERM. OPT	DESTINATION	NOTE
+300V12	IO		106		2/32	
+300V13	IO		006		2/32	
+5V04	IO		001		1/1	
+5V13	IO		101		1/1	
-48V05	PWR		003		1/32	
	PWR		004		1/35,1/55	
GRD04148	GRD		000			
	GRD		036			
	GRD		036			
	GRD		037			
	GRD		037			
	GRD		055			
	GRD		056			
	GRD		100			
	GRD		136			
	GRD		136			
	GRD		137			
	GRD		137			
	GRD		140			
	GRD		141			
	GRD		155			
	GRD		156			
	GRD		200			
	GRD		203			
	GRD		204			
	GRD		206			
	GRD		207			
	GRD		208			
	GRD		255			
	GRD		256			
	GRD		300			
	GRD		301			
	GRD		302			
	GRD		303			
	GRD		304			
	GRD		306			
	GRD		307			
	GRD		308			
	GRD		355			
	GRD		356			
RB0	IO		017		1/11	
RB10	IO		218		1/11	
RB13	IO		224		1/11	
RB15	IO		024		1/11	
RB17	IO		034		1/10	
RB19	IO		234		1/10	
RB2	IO		217		1/11	
RB20	IO		242		1/10	
RB22	IO		042		1/10	
RB25	IO		035		1/10	
RB27	IO		235		1/10	
RB28	IO		243		1/10	
RB30	IO		043		1/10	
RB33	IO		019		1/14	
RB35	IO		219		1/14	
RB36	IO		221		1/17	
RB38	IO		021		1/17	
RB41	IO		020		1/17	
RB43	IO		220		1/17	
RB44	IO		222		1/14	

SYMBOL NO. 32 (CONT)

HALF GRID

DESIG	EQPT LOC	CODE	ELEM IDENT	OPT
GDXHG12	04-148	SEE NOTE 309	A	

LEAD DESIG	FUNC	TERM. MOD	TERM.	TERM. OPT	DESTINATION	NOTE
RB46	IO		022		1/14	
RB48	IO		032		1/14	
RB5	IO		223		1/11	
RB50	IO		232		1/14	
RB53	IO		244		1/17	
RB55	IO		044		1/17	
RB56	IO		033		1/17	
RB58	IO		233		1/17	
RE61	IO		245		1/14	
RB63	IO		045		1/14	
RB7	IO		023		1/11	
RB8	IO		018		1/11	
R6000	IO		010		1/30	
R6001	IO		011		1/30	
R6002	IO		213		1/30	
R6003	IO		215		1/30	
R6010	IO		014		1/30	
R6011	IO		016		1/30	
R6012	IO		210		1/30	
R6013	IO		212		1/30	
R6020	IO		013		1/30	
R6021	IO		015		1/30	
R6022	IO		209		1/30	
R6023	IO		211		1/30	
R6030	IO		009		1/30	
R6031	IO		012		1/30	
R6032	IO		214		1/30	
R6033	IO		216		1/30	
R6040	IO		353		1/30	
R6041	IO		351		1/30	
R6042	IO		349		1/30	
R6043	IO		347		1/30	
R6050	IO		152		1/30	
R6051	IO		150		1/30	
R6052	IO		148		1/30	
R6053	IO		146		1/30	
R6060	IO		153		1/30	
R6061	IO		151		1/30	
R6062	IO		149		1/30	
R6063	IO		147		1/30	
R6070	IO		352		1/30	
R6071	IO		350		1/30	
R6072	IO		348		1/30	
R6073	IO		346		1/30	
TB0	IO		117		1/11	
TB10	IO		318		1/11	
TB13	IO		324		1/11	
TB15	IO		124		1/11	
TB17	IO		134		1/10	
TB19	IO		334		1/10	

PART OF FS 1

SYMBOL(S) 30 31 32

COPYRIGHT (C) 1987 AT&T
ALL RIGHTS RESERVED

LINE UNIT, MODEL 3

DWG SIZE: C2

ISSUE: 2M

AT&T BELL LABORATORIES

SD-5D180-01

B1CV

PART OF FS 1

LU3 LOWER SHELF

SYMBOL NO. 32 (CONT)

HALF GRID

DESIG	EQPT LOC	CODE	ELEM IDENT	OPT
GDXHG12	04-148	SEE NOTE 309	A	

LEAD DESIG	FUNC	TERM. MOD	TERM.	TERM. OPT	DESTINATION	NOTE
TB2	IO		317		1/11	
TB20	IO		342		1/10	
TB22	IO		142		1/10	
TB25	IO		135		1/10	
TB27	IO		335		1/10	
TB28	IO		343		1/10	
TB30	IO		143		1/10	
TB33	IO		119		1/14	
TB35	IO		319		1/14	
TB36	IO		321		1/17	
TB38	IO		121		1/17	
TB41	IO		120		1/17	
TB43	IO		320		1/17	
TB44	IO		322		1/14	
TB46	IO		122		1/14	
TB48	IO		132		1/14	
TB5	IO		323		1/11	
TB50	IO		332		1/14	
TB53	IO		344		1/17	
TB55	IO		144		1/17	
TB56	IO		133		1/17	
TB58	IO		333		1/17	
TB61	IO		345		1/14	
TB63	IO		145		1/14	
TB7	IO		123		1/11	
TB8	IO		118		1/11	
T6000	IO		110		1/31	
T6001	IO		111		1/31	
T6002	IO		313		1/31	
T6003	IO		315		1/31	
T6010	IO		114		1/31	
T6011	IO		116		1/31	
T6012	IO		310		1/31	
T6013	IO		312		1/31	
T6020	IO		113		1/31	
T6021	IO		115		1/31	
T6022	IO		309		1/31	
T6023	IO		311		1/31	
T6030	IO		109		1/31	
T6031	IO		112		1/31	
T6032	IO		314		1/31	
T6033	IO		316		1/31	
T6040	IO		253		1/31	
T6041	IO		251		1/31	
T6042	IO		249		1/31	
T6043	IO		247		1/31	
T6050	IO		052		1/31	
T6051	IO		050		1/31	
T6052	IO		048		1/31	
T6053	IO		046		1/31	
T6060	IO		053		1/31	
T6061	IO		051		1/31	
T6062	IO		049		1/31	
T6063	IO		047		1/31	
T6070	IO		252		1/31	
T6071	IO		250		1/31	
T6072	IO		248		1/31	
T6073	IO		246		1/31	

SYMBOL NO. 32 (CONT)

HALF GRID

DESIG	EQPT LOC	CODE	ELEM IDENT	OPT
GDXHG12	04-148	SEE NOTE 309	A	

LEAD DESIG	FUNC	TERM. MOD	TERM.	TERM. OPT	DESTINATION	NOTE
0ASWG60	IO		237		1/9	
0CLG6	IO		241		1/9	
0DG6	IO		338		1/9	
0EG60	IO		341		1/9	
0PAG60	IO		236		1/9	
0SLG6	IO		240		1/9	
0256KHZ6	IO		038		1/9	
1ASWG60	IO		337		2/9	
1CLG6	IO		339		1/35,2/9	
1DG6	IO		238		1/35,2/9	
1EG60	IO		239		2/9	
1PAG60	IO		336		2/9	
1SLG6	IO		340		1/35,2/9	
1256KHZ6	IO		138		1/35,2/9	

SYMBOL NO. 33

TERMINAL FIELD

DESIG	EQPT LOC	CODE	ELEM IDENT	OPT
TF	04-154	TERMINAL FIELD	A	

LEAD DESIG	FUNC	TERM. MOD	TERM.	TERM. OPT	DESTINATION	NOTE
R6100	IO		002		1/35 TO CAD 1 - CA	
R6101	IO		003		1/35 TO CAD 1 - CA	
R6102	IO		004		1/35 TO CAD 1 - CA	
R6103	IO		005		1/35 TO CAD 1 - CA	
R6110	IO		006		1/35 TO CAD 1 - CA	
R6111	IO		007		1/35 TO CAD 1 - CA	
R6112	IO		008		1/35 TO CAD 1 - CA	
R6113	IO		009		1/35 TO CAD 1 - CA	
R6120	IO		015		1/35 TO CAD 1 - CB	
R6121	IO		016		1/35 TO CAD 1 - CB	
R6122	IO		017		1/35 TO CAD 1 - CB	
R6123	IO		018		1/35 TO CAD 1 - CB	
R6130	IO		019		1/35 TO CAD 1 - CB	
R6131	IO		020		1/35 TO CAD 1 - CB	
R6132	IO		021		1/35 TO CAD 1 - CB	
R6133	IO		022		1/35 TO CAD 1 - CB	
R6140	IO		034		1/35 TO CAD 1 - CC	
R6141	IO		035		1/35 TO CAD 1 - CC	

SYMBOL NO. 33 (CONT)

TERMINAL FIELD

DESIG	EQPT LOC	CODE	ELEM IDENT	OPT
TF	04-154	TERMINAL FIELD	A	

LEAD DESIG	FUNC	TERM. MOD	TERM.	TERM. OPT	DESTINATION	NOTE
R6142	IO		036		1/35 TO CAD 1 - CC	
R6143	IO		037		1/35 TO CAD 1 - CC	
R6150	IO		038		1/35 TO CAD 1 - CC	
R6151	IO		039		1/35 TO CAD 1 - CC	
R6152	IO		040		1/35 TO CAD 1 - CC	
R6153	IO		041		1/35 TO CAD 1 - CC	
R6160	IO		047		1/35 TO CAD 1 - CD	
R6161	IO		048		1/35 TO CAD 1 - CD	
R6162	IO		049		1/35 TO CAD 1 - CD	
R6163	IO		050		1/35 TO CAD 1 - CD	
R6170	IO		051		1/35 TO CAD 1 - CD	
R6171	IO		052		1/35 TO CAD 1 - CD	
R6172	IO		053		1/35 TO CAD 1 - CD	
R6173	IO		054		1/35 TO CAD 1 - CD	

SYMBOL NO. 34

TERMINAL FIELD

DESIG	EQPT LOC	CODE	ELEM IDENT	OPT
TF	04-155	TERMINAL FIELD	A	

LEAD DESIG	FUNC	TERM. MOD	TERM.	TERM. OPT	DESTINATION	NOTE
T6100	IO		002		1/35 TO CAD 1 - CA	
T6101	IO		003		1/35 TO CAD 1 - CA	
T6102	IO		004		1/35 TO CAD 1 - CA	
T6103	IO		005		1/35 TO CAD 1 - CA	
T6110	IO		006		1/35 TO CAD 1 - CA	
T6111	IO		007		1/35 TO CAD 1 - CA	
T6112	IO		008		1/35 TO CAD 1 - CA	
T6113	IO		009		1/35 TO CAD 1 - CA	
T6120	IO		015		1/35 TO CAD 1 - CB	
T6121	IO		016		1/35 TO CAD 1 - CB	
T6122	IO		017		1/35 TO CAD 1 - CB	
T6123	IO		018		1/35 TO CAD 1 - CB	

SYMBOL NO. 34 (CONT)

TERMINAL FIELD

DESIG	EQPT LOC	CODE	ELEM IDENT	OPT
TF	04-155	TERMINAL FIELD	A	

LEAD DESIG	FUNC	TERM. MOD	TERM.	TERM. OPT	DESTINATION	NOTE
T6130	IO		019		1/35 TO CAD 1 - CB	
T6131	IO		020		1/35 TO CAD 1 - CB	
T6132	IO		021		1/35 TO CAD 1 - CB	
T6133	IO		022		1/35 TO CAD 1 - CB	
T6140	IO		034		1/35 TO CAD 1 - CC	
T6141	IO		035		1/35 TO CAD 1 - CC	
T6142	IO		036		1/35 TO CAD 1 - CC	
T6143	IO		037		1/35 TO CAD 1 - CC	
T6150	IO		038		1/35 TO CAD 1 - CC	
T6151	IO		039		1/35 TO CAD 1 - CC	
T6152	IO		040		1/35 TO CAD 1 - CC	
T6153	IO		041		1/35 TO CAD 1 - CC	
T6160	IO		047		1/35 TO CAD 1 - CD	
T6161	IO		048		1/35 TO CAD 1 - CD	
T6162	IO		049		1/35 TO CAD 1 - CD	
T6163	IO		050		1/35 TO CAD 1 - CD	
T6170	IO		051		1/35 TO CAD 1 - CD	
T6171	IO		052		1/35 TO CAD 1 - CD	
T6172	IO		053		1/35 TO CAD 1 - CD	
T6173	IO		054		1/35 TO CAD 1 - CD	

PART OF FS 1

SYMBOL(S) 32 33 34

COPYRIGHT (C) 1987 AT&T
ALL RIGHTS RESERVED

LINE UNIT, MODEL 3

DWG SIZE: D2

ISSUE: 2M

AT&T BELL LABORATORIES

SD-5D180-01

B1CW

PART OF FS 1

LU3 LOWER SHELF

SYMBOL NO. 35

HALF GRID

DESIG	EQPT LOC	CODE	ELEM IDENT	OPT
GDXHG13	04-156	SEE NOTE 309	A	

LEAD DESIG	FUNC	TERM. MOD	TERM.	TERM. OPT	DESTINATION	NOTE
+300V14	IO		106		2/35	
+300V15	IO		006		2/35	
+5V04	IO		001		1/1	
+5V13	IO		101		1/1	
-48V05	PWR		003		1/32	
	PWR		004		1/32	
GRDD4156	GRD		000			
	GRD		036			
	GRD		036			
	GRD		037			
	GRD		037			
	GRD		055			
	GRD		056			
	GRD		100			
	GRD		136			
	GRD		136			
	GRD		137			
	GRD		137			
	GRD		140			
	GRD		141			
	GRD		155			
	GRD		156			
	GRD		200			
	GRD		203			
	GRD		204			
	GRD		206			
	GRD		207			
	GRD		208			
	GRD		255			
	GRD		256			
	GRD		300			
	GRD		301			
	GRD		302			
	GRD		303			
	GRD		304			
	GRD		306			
	GRD		307			
	GRD		308			
	GRD		355			
	GRD		356			
RB1	IO		019		1/11	
RB11	IO		220		1/11	
RB12	IO		222		1/11	
RB14	IO		022		1/11	
RB16	IO		032		1/10	
RB18	IO		232		1/10	
RB21	IO		244		1/10	
RB23	IO		044		1/10	
RB24	IO		033		1/10	
RB26	IO		233		1/10	
RB29	IO		245		1/10	
RB3	IO		219		1/11	
RB31	IO		045		1/10	
RB32	IO		017		1/17	
RB34	IO		217		1/17	
RB37	IO		223		1/14	
RB39	IO		023		1/14	
RB4	IO		221		1/11	
RB40	IO		018		1/14	
RB42	IO		218		1/14	

SYMBOL NO. 35 (CONT)

HALF GRID

DESIG	EQPT LOC	CODE	ELEM IDENT	OPT
GDXHG13	04-156	SEE NOTE 309	A	

LEAD DESIG	FUNC	TERM. MOD	TERM.	TERM. OPT	DESTINATION	NOTE
RB45	IO		224		1/17	
RB47	IO		024		1/17	
RB49	IO		034		1/17	
RB51	IO		234		1/17	
RB52	IO		242		1/14	
	IO		042		1/14	
	IO		035		1/14	
	IO		235		1/14	
RB6	IO		021		1/11	
RB60	IO		243		1/17	
RB62	IO		043		1/17	
RB9	IO		020		1/11	
R6100	IO		010		1/33	
R6101	IO		011		1/33	
R6102	IO		213		1/33	
R6103	IO		215		1/33	
R6110	IO		014		1/33	
R6111	IO		016		1/33	
R6112	IO		210		1/33	
R6113	IO		212		1/33	
R6120	IO		013		1/33	
R6121	IO		015		1/33	
R6122	IO		209		1/33	
R6123	IO		211		1/33	
	IO		009		1/33	
	IO		012		1/33	
R6132	IO		214		1/33	
R6133	IO		216		1/33	
R6140	IO		353		1/33	
R6141	IO		351		1/33	
R6142	IO		349		1/33	
R6143	IO		347		1/33	
R6150	IO		152		1/33	
R6151	IO		150		1/33	
R6152	IO		148		1/33	
R6153	IO		146		1/33	
R6160	IO		153		1/33	
R6161	IO		151		1/33	
R6162	IO		149		1/33	
R6163	IO		147		1/33	
R6170	IO		352		1/33	
R6171	IO		350		1/33	
R6172	IO		348		1/33	
R6173	IO		346		1/33	
TB1	IO		119		1/11	
TB11	IO		320		1/11	
TB12	IO		322		1/11	
TB14	IO		122		1/11	
TB16	IO		132		1/10	
TB18	IO		332		1/10	
TB21	IO		344		1/10	
TB23	IO		144		1/10	
TB24	IO		133		1/10	
TB26	IO		333		1/10	
TB29	IO		345		1/10	
TB3	IO		319		1/11	
TB31	IO		145		1/10	
TB32	IO		117		1/17	
TB34	IO		317		1/17	
TB37	IO		323		1/14	

SYMBOL NO. 35 (CONT)

HALF GRID

DESIG	EQPT LOC	CODE	ELEM IDENT	OPT
GDXHG13	04-156	SEE NOTE 309	A	

LEAD DESIG	FUNC	TERM. MOD	TERM.	TERM. OPT	DESTINATION	NOTE
TB39	IO		123		1/14	
TB4	IO		321		1/11	
	IO		118		1/14	
	IO		318		1/14	
	IO		324		1/17	
	IO		124		1/17	
	IO		134		1/17	
	IO		334		1/17	
	IO		342		1/14	
	IO		142		1/14	
	IO		135		1/14	
	IO		335		1/14	
	IO		121		1/11	
	IO		343		1/17	
TB62	IO		143		1/17	
TB9	IO		120		1/11	
T6100	IO		110		1/34	
T6101	IO		111		1/34	
T6102	IO		313		1/34	
T6103	IO		315		1/34	
T6110	IO		114		1/34	
T6111	IO		116		1/34	
T6112	IO		310		1/34	
T6113	IO		312		1/34	
T6120	IO		113		1/34	
T6121	IO		115		1/34	
T6122	IO		309		1/34	
T6123	IO		311		1/34	
T6130	IO		109		1/34	
T6131	IO		112		1/34	
T6132	IO		314		1/34	
T6133	IO		316		1/34	
T6140	IO		253		1/34	
T6141	IO		251		1/34	
T6142	IO		249		1/34	
T6143	IO		247		1/34	
T6150	IO		052		1/34	
T6151	IO		050		1/34	
T6152	IO		048		1/34	
T6153	IO		046		1/34	
T6160	IO		053		1/34	
T6161	IO		051		1/34	
T6162	IO		049		1/34	
T6163	IO		047		1/34	
T6170	IO		252		1/34	
T6171	IO		250		1/34	
T6172	IO		248		1/34	
T6173	IO		246		1/34	
0ASWG61	IO		237		1/9	
0CLG6	IO		241		1/9	
0DG6	IO		338		1/9	
0EG61	IO		341		1/9	
0PAG61	IO		236		1/9	
0SLG6	IO		240		1/9	
0Z56KHZ6	IO		038		1/9	
1ASWG61	IO		337		2/9	
1CLG6	IO		339		1/32	
1DG6	IO		238		1/32	
1EG61	IO		239		2/9	
1PAG61	IO		336		2/9	

SYMBOL NO. 35 (CONT)

HALF GRID

DESIG	EQPT LOC	CODE	ELEM IDENT	OPT
GDXHG13	04-156	SEE NOTE 309	A	

LEAD DESIG	FUNC	TERM. MOD	TERM.	TERM. OPT	DESTINATION	NOTE
1SLG6	IO		340		1/32	
1256KHZ6	IO		138		1/32	

PART OF FS 1

SYMBOL(S) 35

COPYRIGHT (C) 1987 AT&T
ALL RIGHTS RESERVED

LINE UNIT, MODEL 3

DWG SIZE: D2

ISSUE: 2M

AT&T BELL LABORATORIES

SD-5D180-01

B1CX

PART OF FS 1

LU3 LOWER SHELF

SYMBOL NO. 36

TERMINAL FIELD

DESIG	EQPT LOC	CODE	ELEM IDENT	OPT
TF	04-162	TERMINAL FIELD	A	

LEAD DESIG	FUNC	TERM. MOD	TERM.	TERM. OPT	DESTINATION	NOTE
R8000	IO		002		1/38 TO CAD 1 - CM	
R8001	IO		003		1/38 TO CAD 1 - CM	
R8002	IO		004		1/38 TO CAD 1 - CM	
R8003	IO		005		1/38 TO CAD 1 - CM	
R8010	IO		006		1/38 TO CAD 1 - CM	
R8011	IO		007		1/38 TO CAD 1 - CM	
R8012	IO		008		1/38 TO CAD 1 - CM	
R8013	IO		009		1/38 TO CAD 1 - CM	
R8020	IO		015		1/38 TO CAD 1 - CN	
R8021	IO		016		1/38 TO CAD 1 - CN	
R8022	IO		017		1/38 TO CAD 1 - CN	
R8023	IO		018		1/38 TO CAD 1 - CN	
R8030	IO		019		1/38 TO CAD 1 - CN	
R8031	IO		020		1/38 TO CAD 1 - CN	
R8032	IO		021		1/38 TO CAD 1 - CN	
R8033	IO		022		1/38 TO CAD 1 - CN	
R8040	IO		034		1/38 TO CAD 1 - CO	
R8041	IO		035		1/38 TO CAD 1 - CO	
R8042	IO		036		1/38 TO CAD 1 - CO	
R8043	IO		037		1/38 TO CAD 1 - CO	
R8050	IO		038		1/38 TO CAD 1 - CO	
R8051	IO		039		1/38 TO CAD 1 - CO	
R8052	IO		040		1/38 TO CAD 1 - CO	
R8053	IO		041		1/38 TO CAD 1 - CO	
R8060	IO		047		1/38 TO CAD 1 - CP	
R8061	IO		048		1/38 TO CAD 1 - CP	
R8062	IO		049		1/38 TO CAD 1 - CP	
R8063	IO		050		1/38 TO CAD 1 - CP	
R8070	IO		051		1/38 TO CAD 1 - CP	
R8071	IO		052		1/38 TO CAD 1 - CP	
R8072	IO		053		1/38 TO CAD 1 - CP	
R8073	IO		054		1/38 TO CAD 1 - CP	

SYMBOL NO. 37

TERMINAL FIELD

DESIG	EQPT LOC	CODE	ELEM IDENT	OPT
TF	04-163	TERMINAL FIELD	A	

LEAD DESIG	FUNC	TERM. MOD	TERM.	TERM. OPT	DESTINATION	NOTE
T8000	IO		002		1/38 TO CAD 1 - CM	
T8001	IO		003		1/38 TO CAD 1 - CM	
T8002	IO		004		1/38 TO CAD 1 - CM	
T8003	IO		005		1/38 TO CAD 1 - CM	
T8010	IO		006		1/38 TO CAD 1 - CM	
T8011	IO		007		1/38 TO CAD 1 - CM	
T8012	IO		008		1/38 TO CAD 1 - CM	
T8013	IO		009		1/38 TO CAD 1 - CM	
T8020	IO		015		1/38 TO CAD 1 - CN	
T8021	IO		016		1/38 TO CAD 1 - CN	
T8022	IO		017		1/38 TO CAD 1 - CN	
T8023	IO		018		1/38 TO CAD 1 - CN	
T8030	IO		019		1/38 TO CAD 1 - CN	
T8031	IO		020		1/38 TO CAD 1 - CN	
T8032	IO		021		1/38 TO CAD 1 - CN	
T8033	IO		022		1/38 TO CAD 1 - CN	
T8040	IO		034		1/38 TO CAD 1 - CO	
T8041	IO		035		1/38 TO CAD 1 - CO	
T8042	IO		036		1/38 TO CAD 1 - CO	
T8043	IO		037		1/38 TO CAD 1 - CO	
T8050	IO		038		1/38 TO CAD 1 - CO	
T8051	IO		039		1/38 TO CAD 1 - CO	
T8052	IO		040		1/38 TO CAD 1 - CO	
T8053	IO		041		1/38 TO CAD 1 - CO	
T8060	IO		047		1/38 TO CAD 1 - CP	
T8061	IO		048		1/38 TO CAD 1 - CP	
T8062	IO		049		1/38 TO CAD 1 - CP	
T8063	IO		050		1/38 TO CAD 1 - CP	
T8070	IO		051		1/38 TO CAD 1 - CP	
T8071	IO		052		1/38 TO CAD 1 - CP	
T8072	IO		053		1/38 TO CAD 1 - CP	
T8073	IO		054		1/38 TO CAD 1 - CP	

SYMBOL NO. 38

HALF GRID

DESIG	EQPT LOC	CODE	ELEM IDENT	OPT
GDXHG16	04-164	SEE NOTE 309	A	

LEAD DESIG	FUNC	TERM. MOD	TERM.	TERM. OPT	DESTINATION	NOTE
+300V16	IO		106		2/38	
+300V17	IO		006		2/38	
+5V04	IO		001		1/1	
+5V13	IO		101		1/1	
-48V06	PWR		004		1/38	
	PWR		003		1/41,1/57	
GRD04164	GRD		000			
	GRD		036			
	GRD		036			
	GRD		037			
	GRD		037			
	GRD		055			
	GRD		056			
	GRD		100			
	GRD		136			
	GRD		136			
	GRD		137			
	GRD		137			
	GRD		140			
	GRD		141			
	GRD		155			
	GRD		156			
	GRD		200			
	GRD		203			
	GRD		204			
	GRD		206			
	GRD		207			
	GRD		208			
	GRD		255			
	GRD		256			
	GRD		300			
	GRD		301			
	GRD		302			
	GRD		303			
	GRD		304			
	GRD		306			
	GRD		307			
	GRD		308			
	GRD		355			
	GRD		356			
RB12	IO		222		1/11	
RB13	IO		224		1/11	
RB16	IO		032		1/10	
RB17	IO		034		1/10	
RB2	IO		217		1/11	
RB20	IO		242		1/10	
RB21	IO		244		1/10	
RB26	IO		233		1/10	
RB27	IO		235		1/10	
RB3	IO		219		1/11	
RB30	IO		043		1/10	
RB31	IO		045		1/10	
RB32	IO		017		1/17	
RB33	IO		019		1/14	
RB36	IO		221		1/17	
RB37	IO		223		1/14	
RB42	IO		218		1/14	
RB43	IO		220		1/17	
RB46	IO		022		1/14	
RB47	IO		024		1/17	

SYMBOL NO. 38 (CONT)

HALF GRID

DESIG	EQPT LOC	CODE	ELEM IDENT	OPT
GDXHG16	04-164	SEE NOTE 309	A	

LEAD DESIG	FUNC	TERM. MOD	TERM.	TERM. OPT	DESTINATION	NOTE
RB50	IO		232		1/14	
RB51	IO		234		1/17	
RB54	IO		042		1/14	
RB55	IO		044		1/17	
RB56	IO		033		1/17	
RB57	IO		035		1/14	
RB6	IO		021		1/11	
RB60	IO		243		1/17	
RB61	IO		245		1/14	
RB7	IO		023		1/11	
RB8	IO		018		1/11	
RB9	IO		020		1/11	
R8000	IO		010		1/36	
R8001	IO		011		1/36	
R8002	IO		213		1/36	
R8003	IO		215		1/36	
R8010	IO		014		1/36	
R8011	IO		016		1/36	
R8012	IO		210		1/36	
R8013	IO		212		1/36	
R8020	IO		013		1/36	
R8021	IO		015		1/36	
R8022	IO		209		1/36	
R8023	IO		211		1/36	
R8030	IO		009		1/36	
R8031	IO		012		1/36	
R8032	IO		214		1/36	
R8033	IO		216		1/36	
R8040	IO		353		1/36	
R8041	IO		351		1/36	
R8042	IO		349		1/36	
R8043	IO		347		1/36	
R8050	IO		152		1/36	
R8051	IO		150		1/36	
R8052	IO		148		1/36	
R8053	IO		146		1/36	
R8060	IO		153		1/36	
R8061	IO		151		1/36	
R8062	IO		149		1/36	
R8063	IO		147		1/36	
R8070	IO		352		1/36	
R8071	IO		350		1/36	
R8072	IO		348		1/36	
R8073	IO		346		1/36	
TB12	IO		322		1/11	
TB13	IO		324		1/11	
TB16	IO		132		1/10	
TB17	IO		134		1/10	
TB2	IO		317		1/11	
TB20	IO		342		1/10	

PART OF FS 1

SYMBOL(S) 36 37 38

COPYRIGHT (c) 1987 AT&T
ALL RIGHTS RESERVED

LINE UNIT, MODEL 3

DWG SIZE: D2

ISSUE: 2M

AT&T BELL LABORATORIES

SD-5D180-01

B1CY

PART OF FS 1

LU3 LOWER SHELF

SYMBOL NO. 38 (CONT)

HALF GRID

DESIG	EQPT LOC	CODE	ELEM IDENT	OPT
GDXHG16	04-164	SEE NOTE 309	A	

LEAD DESIG	FUNC	TERM. MOD	TERM.	TERM. OPT	DESTINATION	NOTE
TB21	IO		344		1/10	
TB26	IO		333		1/10	
TB27	IO		335		1/10	
TB3	IO		319		1/11	
TB30	IO		143		1/10	
TB31	IO		145		1/10	
TB32	IO		117		1/17	
TB33	IO		119		1/14	
TB36	IO		321		1/17	
TB37	IO		323		1/14	
TB42	IO		318		1/14	
TB43	IO		320		1/17	
TB46	IO		122		1/14	
TB47	IO		124		1/17	
TB50	IO		332		1/14	
TB51	IO		334		1/17	
TB54	IO		142		1/14	
TB55	IO		144		1/17	
TB56	IO		133		1/17	
TB57	IO		135		1/14	
TB6	IO		121		1/11	
TB60	IO		343		1/17	
TB61	IO		345		1/14	
TB7	IO		123		1/11	
TB8	IO		118		1/11	
TB9	IO		120		1/11	
T8000	IO		110		1/37	
T8001	IO		111		1/37	
T8002	IO		313		1/37	
T8003	IO		315		1/37	
T8010	IO		114		1/37	
T8011	IO		116		1/37	
T8012	IO		310		1/37	
T8013	IO		312		1/37	
T8020	IO		113		1/37	
T8021	IO		115		1/37	
T8022	IO		309		1/37	
T8023	IO		311		1/37	
T8030	IO		109		1/37	
T8031	IO		112		1/37	
T8032	IO		314		1/37	
T8033	IO		316		1/37	
T8040	IO		253		1/37	
T8041	IO		251		1/37	
T8042	IO		249		1/37	
T8043	IO		247		1/37	
T8050	IO		052		1/37	
T8051	IO		050		1/37	
T8052	IO		048		1/37	
T8053	IO		046		1/37	
T8060	IO		053		1/37	
T8061	IO		051		1/37	
T8062	IO		049		1/37	
T8063	IO		047		1/37	
T8070	IO		252		1/37	
T8071	IO		250		1/37	
T8072	IO		248		1/37	
T8073	IO		246		1/37	

SYMBOL NO. 38 (CONT)

HALF GRID

DESIG	EQPT LOC	CODE	ELEM IDENT	OPT
GDXHG16	04-164	SEE NOTE 309	A	

LEAD DESIG	FUNC	TERM. MOD	TERM.	TERM. OPT	DESTINATION	NOTE
0ASWG80	IO		237		1/9	
0CLHG80	IO		241		1/9	
0DG80	IO		338		1/9	
0EG80	IO		341		1/9	
0PAG80	IO		236		1/9	
0SLG8	IO		240		1/9	
0Z56KHZ8	IO		038		1/9	
1ASHG80	IO		337		2/9	
1CLHG80	IO		339		2/9	
1DG80	IO		238		2/9	
1EG80	IO		239		2/9	
1PAG80	IO		336		2/9	
1SLG8	IO		340		1/41,2/9	
1Z56KHZ8	IO		138		1/41,2/9	

SYMBOL NO. 39

TERMINAL FIELD

DESIG	EQPT LOC	CODE	ELEM IDENT	OPT
TF	04-170	TERMINAL FIELD	A	

LEAD DESIG	FUNC	TERM. MOD	TERM.	TERM. OPT	DESTINATION	NOTE
R8100	IO		002		1/41 TO CAD 1 - CO	
R8101	IO		003		1/41 TO CAD 1 - CO	
R8102	IO		004		1/41 TO CAD 1 - CO	
R8103	IO		005		1/41 TO CAD 1 - CO	
R8110	IO		006		1/41 TO CAD 1 - CO	
R8111	IO		007		1/41 TO CAD 1 - CO	
R8112	IO		008		1/41 TO CAD 1 - CO	
R8113	IO		009		1/41 TO CAD 1 - CO	
R8120	IO		015		1/41 TO CAD 1 - CR	
R8121	IO		016		1/41 TO CAD 1 - CR	
R8122	IO		017		1/41 TO CAD 1 - CR	
R8123	IO		018		1/41 TO CAD 1 - CR	
R8130	IO		019		1/41 TO CAD 1 - CR	
R8131	IO		020		1/41 TO CAD 1 - CR	
R8132	IO		021		1/41 TO CAD 1 - CR	
R8133	IO		022		1/41 TO CAD 1 - CR	
R8140	IO		034		1/41 TO CAD 1 - CS	
R8141	IO		035		1/41 TO CAD 1 - CS	

SYMBOL NO. 39 (CONT)

TERMINAL FIELD

DESIG	EQPT LOC	CODE	ELEM IDENT	OPT
TF	04-170	TERMINAL FIELD	A	

LEAD DESIG	FUNC	TERM. MOD	TERM.	TERM. OPT	DESTINATION	NOTE
R8142	IO		036		1/41 TO CAD 1 - CS	
R8143	IO		037		1/41 TO CAD 1 - CS	
R8150	IO		038		1/41 TO CAD 1 - CS	
R8151	IO		039		1/41 TO CAD 1 - CS	
R8152	IO		040		1/41 TO CAD 1 - CS	
R8153	IO		041		1/41 TO CAD 1 - CS	
R8160	IO		047		1/41 TO CAD 1 - CT	
R8161	IO		048		1/41 TO CAD 1 - CT	
R8162	IO		049		1/41 TO CAD 1 - CT	
R8163	IO		050		1/41 TO CAD 1 - CT	
R8170	IO		051		1/41 TO CAD 1 - CT	
R8171	IO		052		1/41 TO CAD 1 - CT	
R8172	IO		053		1/41 TO CAD 1 - CT	
R8173	IO		054		1/41 TO CAD 1 - CT	

SYMBOL NO. 40

TERMINAL FIELD

DESIG	EQPT LOC	CODE	ELEM IDENT	OPT
TF	04-171	TERMINAL FIELD	A	

LEAD DESIG	FUNC	TERM. MOD	TERM.	TERM. OPT	DESTINATION	NOTE
T8100	IO		002		1/41 TO CAD 1 - CO	
T8101	IO		003		1/41 TO CAD 1 - CO	
T8102	IO		004		1/41 TO CAD 1 - CO	
T8103	IO		005		1/41 TO CAD 1 - CO	
T8110	IO		006		1/41 TO CAD 1 - CO	
T8111	IO		007		1/41 TO CAD 1 - CO	
T8112	IO		008		1/41 TO CAD 1 - CO	
T8113	IO		009		1/41 TO CAD 1 - CO	
T8120	IO		015		1/41 TO CAD 1 - CR	
T8121	IO		016		1/41 TO CAD 1 - CR	
T8122	IO		017		1/41 TO CAD 1 - CR	
T8123	IO		018		1/41 TO CAD 1 - CR	

SYMBOL NO. 40 (CONT)

TERMINAL FIELD

DESIG	EQPT LOC	CODE	ELEM IDENT	OPT
TF	04-171	TERMINAL FIELD	A	

LEAD DESIG	FUNC	TERM. MOD	TERM.	TERM. OPT	DESTINATION	NOTE
T8130	IO		019		1/41 TO CAD 1 - CR	
T8131	IO		020		1/41 TO CAD 1 - CR	
T8132	IO		021		1/41 TO CAD 1 - CR	
T8133	IO		022		1/41 TO CAD 1 - CR	
T8140	IO		034		1/41 TO CAD 1 - CS	
T8141	IO		035		1/41 TO CAD 1 - CS	
T8142	IO		036		1/41 TO CAD 1 - CS	
T8143	IO		037		1/41 TO CAD 1 - CS	
T8150	IO		038		1/41 TO CAD 1 - CS	
T8151	IO		039		1/41 TO CAD 1 - CS	
T8152	IO		040		1/41 TO CAD 1 - CS	
T8153	IO		041		1/41 TO CAD 1 - CS	
T8160	IO		047		1/41 TO CAD 1 - CT	
T8161	IO		048		1/41 TO CAD 1 - CT	
T8162	IO		049		1/41 TO CAD 1 - CT	
T8163	IO		050		1/41 TO CAD 1 - CT	
T8170	IO		051		1/41 TO CAD 1 - CT	
T8171	IO		052		1/41 TO CAD 1 - CT	
T8172	IO		053		1/41 TO CAD 1 - CT	
T8173	IO		054		1/41 TO CAD 1 - CT	

PART OF FS 1

SYMBOL(S) 38 39 40

COPYRIGHT (c) 1987 AT&T
ALL RIGHTS RESERVED

LINE UNIT, MODEL 3

DWG SIZE: D2

ISSUE: 2M

AT&T BELL LABORATORIES

SD-5D180-01

B1DA

PART OF FS 1

LU3 LOWER SHELF

SYMBOL NO. 41

HALF GRID

DESIG	EQPT LOC	CODE	ELEM IDENT	OPT
GDXHG17	04-17Z	SEE NOTE 309	A	

LEAD DESIG	FUNC	TERM. MOD	TERM.	TERM. OPT	DESTINATION	NOTE
+300V18	IO		106		2/41	
+300V19	IO		006		2/41	
+5V04	IO		001		1/1	
+5V13	IO		101		1/1	
-48V06	PWR		003		1/38	
	PWR		004		1/38	
GRD04172	GRD		000			
	GRD		036			
	GRD		036			
	GRD		036			
	GRD		037			
	GRD		037			
	GRD		055			
	GRD		056			
	GRD		100			
	GRD		136			
	GRD		136			
	GRD		136			
	GRD		137			
	GRD		137			
	GRD		140			
	GRD		141			
	GRD		155			
	GRD		156			
	GRD		200			
	GRD		203			
	GRD		204			
	GRD		206			
	GRD		207			
	GRD		208			
	GRD		255			
	GRD		256			
	GRD		300			
	GRD		301			
	GRD		302			
	GRD		303			
	GRD		304			
	GRD		306			
	GRD		307			
	GRD		308			
	GRD		355			
	GRD		356			
RB0	IO		017		1/11	
RB1	IO		019		1/11	
RB10	IO		218		1/11	
RB11	IO		220		1/11	
RB14	IO		022		1/11	
RB15	IO		024		1/11	
RB18	IO		232		1/10	
RB19	IO		234		1/10	
RB22	IO		042		1/10	
RB23	IO		044		1/10	
RB24	IO		033		1/10	
RB25	IO		035		1/10	
RB28	IO		243		1/10	
RB29	IO		245		1/10	
RB34	IO		217		1/17	
RB35	IO		219		1/14	
RB38	IO		021		1/17	
RB39	IO		023		1/14	

SYMBOL NO. 41 (CONT)

HALF GRID

DESIG	EQPT LOC	CODE	ELEM IDENT	OPT
GDXHG17	04-17Z	SEE NOTE 309	A	

LEAD DESIG	FUNC	TERM. MOD	TERM.	TERM. OPT	DESTINATION	NOTE
RB4	IO		221		1/11	
RB40	IO		018		1/14	
RB41	IO		020		1/17	
RB44	IO		222		1/14	
RB45	IO		224		1/17	
RB48	IO		032		1/14	
RB49	IO		034		1/17	
RB5	IO		223		1/11	
RB52	IO		242		1/14	
RB53	IO		244		1/17	
RB58	IO		233		1/17	
RB59	IO		235		1/14	
RB62	IO		043		1/17	
RB63	IO		045		1/14	
R8100	IO		010		1/39	
R8101	IO		011		1/39	
R8102	IO		213		1/39	
R8103	IO		215		1/39	
R8110	IO		014		1/39	
R8111	IO		016		1/39	
R8112	IO		210		1/39	
R8113	IO		212		1/39	
R8120	IO		013		1/39	
R8121	IO		015		1/39	
R8122	IO		209		1/39	
R8123	IO		211		1/39	
R8130	IO		009		1/39	
R8131	IO		012		1/39	
R8132	IO		214		1/39	
R8133	IO		216		1/39	
R8140	IO		353		1/39	
R8141	IO		351		1/39	
R8142	IO		349		1/39	
R8143	IO		347		1/39	
R8150	IO		152		1/39	
R8151	IO		150		1/39	
R8152	IO		148		1/39	
R8153	IO		146		1/39	
R8160	IO		153		1/39	
R8161	IO		151		1/39	
R8162	IO		149		1/39	
R8163	IO		147		1/39	
R8170	IO		352		1/39	
R8171	IO		350		1/39	
R8172	IO		348		1/39	
R8173	IO		346		1/39	
TB0	IO		117		1/11	
TB1	IO		119		1/11	
TB10	IO		318		1/11	
TB11	IO		320		1/11	
TB14	IO		122		1/11	
TB15	IO		124		1/11	
TB18	IO		332		1/10	
TB19	IO		334		1/10	
TB22	IO		142		1/10	
TB23	IO		144		1/10	
TB24	IO		133		1/10	
TB25	IO		135		1/10	
TB28	IO		343		1/10	
TB29	IO		345		1/10	

SYMBOL NO. 41 (CONT)

HALF GRID

DESIG	EQPT LOC	CODE	ELEM IDENT	OPT
GDXHG17	04-17Z	SEE NOTE 309	A	

LEAD DESIG	FUNC	TERM. MOD	TERM.	TERM. OPT	DESTINATION	NOTE
TB34	IO		317		1/17	
TB35	IO		319		1/14	
TB38	IO		121		1/17	
TB39	IO		123		1/14	
TB4	IO		321		1/11	
TB40	IO		118		1/14	
TB41	IO		120		1/17	
TB44	IO		322		1/14	
TB45	IO		324		1/17	
TB48	IO		132		1/14	
TB49	IO		134		1/17	
TB5	IO		323		1/11	
TB52	IO		342		1/14	
TB53	IO		344		1/17	
TB58	IO		333		1/17	
TB59	IO		335		1/14	
TB62	IO		143		1/17	
TB63	IO		145		1/14	
T8100	IO		110		1/40	
T8101	IO		111		1/40	
T810Z	IO		313		1/40	
T8103	IO		315		1/40	
T8110	IO		114		1/40	
T8111	IO		116		1/40	
T8112	IO		310		1/40	
T8113	IO		312		1/40	
T8120	IO		113		1/40	
T8121	IO		115		1/40	
T8122	IO		309		1/40	
T8123	IO		311		1/40	
T8130	IO		109		1/40	
T8131	IO		112		1/40	
T8132	IO		314		1/40	
T8133	IO		316		1/40	
T8140	IO		253		1/40	
T8141	IO		251		1/40	
T8142	IO		249		1/40	
T8143	IO		247		1/40	
T8150	IO		052		1/40	
T8151	IO		050		1/40	
T8152	IO		048		1/40	
T8153	IO		046		1/40	
T8160	IO		053		1/40	
T8161	IO		051		1/40	
T8162	IO		049		1/40	
T8163	IO		047		1/40	
T8170	IO		252		1/40	
T8171	IO		250		1/40	
T8172	IO		248		1/40	
T8173	IO		246		1/40	
0ASHG81	IO		237		1/9	
0CLHG81	IO		241		1/9	
0DG81	IO		338		1/9	
0EG81	IO		341		1/9	
0PAG81	IO		236		1/9	
0SLG8	IO		240		1/9	
0256KHZ8	IO		038		1/9	
1ASHG81	IO		337		2/9	
1CLHG81	IO		339		2/9	
1DG81	IO		238		2/9	

SYMBOL NO. 41 (CONT)

HALF GRID

DESIG	EQPT LOC	CODE	ELEM IDENT	OPT
GDXHG17	04-17Z	SEE NOTE 309	A	

LEAD DESIG	FUNC	TERM. MOD	TERM.	TERM. OPT	DESTINATION	NOTE
1EG81	IO		239		2/9	
1PAG81	IO		336		2/9	
1SLG8	IO		340		1/38	
1256KHZ8	IO		138		1/38	

PART OF FS 1

SYMBOL(S) 41

COPYRIGHT (C) 1987 AT&T
ALL RIGHTS RESERVED

LINE UNIT, MODEL 3

DWG SIZE: D2

ISSUE: 2M

AT&T BELL LABORATORIES

SD-5D180-01

B1DB

PART OF FS 1

LU3 LOWER SHELF

SYMBOL NO. 42

AUXILIARY CIRCUIT

DESIG	EQPT LOC	CODE	ELEM IDENT	OPT
OAUX	04-178	MC5X254A1	A	

LEAD DESIG	FUNC	TERM. MOD	TERM.	TERM. OPT	DESTINATION	NOTE
+5V04	IO		024		1/1	
	IO		124		1/1	
	IO		224		1/1	
	IO		324		1/1	
-48V07	PWR		302		1/58	
	PWR		303		1/42	
	PWR		304		1/42	
	PWR		305		1/42	
-5V0	IO		256		1/1	
	IO		356		1/1	
GRD04172	GRD		000			
	GRD		032			
	GRD		100			
	GRD		132			
	GRD		200			
	GRD		206			
	GRD		207			
	GRD		208			
	GRD		209			
	GRD		232			
	GRD		234			
	GRD		235			
	GRD		236			
	GRD		237			
	GRD		238			
	GRD		239			
	GRD		240			
	GRD		241			
	GRD		242			
	GRD		243			
	GRD		244			
	GRD		245			
	GRD		246			
	GRD		300			
	GRD		332			
	GRD		334			
	GRD		336			
	GRD		338			
	GRD		340			
	GRD		342			
	GRD		344			
	GRD		346			
OAASW0	IO		337		1/9	
OAASW1	IO		339		1/9	
OCLAUX	IO		341		1/9	
OCURPRN	IO		012		1/1	
OCURPRP	IO		112		1/1	
ODAUX	IO		345		1/9	
OEAUX	IO		343		1/9	
OPAA	IO		335		1/9	

SYMBOL NO. 43

GROUND LUG

DESIG	EQPT LOC	CODE	ELEM IDENT	OPT
LUG	01-014	GROUND LUG	A	

LEAD DESIG	FUNC	TERM. MOD	TERM.	TERM. OPT	DESTINATION	NOTE
GRDLUG	GRD		080		TO CAD 1 - DM	

SYMBOL NO. 44

POWER LUG

DESIG	EQPT LOC	CODE	ELEM IDENT	OPT
LUG	01-022	POWER LUG	A	

LEAD DESIG	FUNC	TERM. MOD	TERM.	TERM. OPT	DESTINATION	NOTE
-48V00	PWR		080		1/1 TO CAD 1 - DM	

SYMBOL NO. 45

POWER LUG

DESIG	EQPT LOC	CODE	ELEM IDENT	OPT
LUG	01-032	POWER LUG	A	

LEAD DESIG	FUNC	TERM. MOD	TERM.	TERM. OPT	DESTINATION	NOTE
-48V00	PWR		180		1/1	206

SYMBOL NO. 46

GROUND LUG

DESIG	EQPT LOC	CODE	ELEM IDENT	OPT
LUG	01-057	GROUND LUG	A	

LEAD DESIG	FUNC	TERM. MOD	TERM.	TERM. OPT	DESTINATION	NOTE
GRDLUG	GRD		080		TO CAD 1 - DM	

SYMBOL NO. 47

POWER LUG

DESIG	EQPT LOC	CODE	ELEM IDENT	OPT
LUG	01-064	POWER LUG	A	

LEAD DESIG	FUNC	TERM. MOD	TERM.	TERM. OPT	DESTINATION	NOTE
-48V01	PWR		080		1/5 TO CAD 1 - DM	

SYMBOL NO. 48

GROUND LUG

DESIG	EQPT LOC	CODE	ELEM IDENT	OPT
LUG	01-105	GROUND LUG	A	

LEAD DESIG	FUNC	TERM. MOD	TERM.	TERM. OPT	DESTINATION	NOTE
GRDLUG	GRD		080		TO CAD 1 - DM	

SYMBOL NO. 49

POWER LUG

DESIG	EQPT LOC	CODE	ELEM IDENT	OPT
LUG	01-108	POWER LUG	A	

LEAD DESIG	FUNC	TERM. MOD	TERM.	TERM. OPT	DESTINATION	NOTE
-48V02	PWR		180		1/14 TO CAD 1 - DM	

SYMBOL NO. 50

GROUND LUG

DESIG	EQPT LOC	CODE	ELEM IDENT	OPT
LUG	01-121	GROUND LUG	A	

LEAD DESIG	FUNC	TERM. MOD	TERM.	TERM. OPT	DESTINATION	NOTE
GRDLUG	GRD		080		TO CAD 1 - DM	

SYMBOL NO. 51

POWER LUG

DESIG	EQPT LOC	CODE	ELEM IDENT	OPT
LUG	01-124	POWER LUG	A	

LEAD DESIG	FUNC	TERM. MOD	TERM.	TERM. OPT	DESTINATION	NOTE
-48V03	PWR		180		1/20 TO CAD 1 - DM	

SYMBOL NO. 52

GROUND LUG

DESIG	EQPT LOC	CODE	ELEM IDENT	OPT
LUG	01-129	GROUND LUG	A	

LEAD DESIG	FUNC	TERM. MOD	TERM.	TERM. OPT	DESTINATION	NOTE
GRDLUG	GRD		080		TO CAD 1 - DM	

SYMBOL NO. 53

POWER LUG

DESIG	EQPT LOC	CODE	ELEM IDENT	OPT
LUG	01-145	POWER LUG	A	

LEAD DESIG	FUNC	TERM. MOD	TERM.	TERM. OPT	DESTINATION	NOTE
-48V04	PWR		080		1/26 TO CAD 1 - DM	

PART OF FS 1

SYMBOL(S) 42 43 44 45 46 47 48 49 50 51 52 53

COPYRIGHT (C) 1987 AT&T
ALL RIGHTS RESERVED

LINE UNIT, MODEL 3

DWG SIZE: D2

ISSUE: 2M

AT&T BELL LABORATORIES

SD-5D180-01

B1DC

PART OF FS 1

LU3 LOWER SHELF

SYMBOL NO. 54

GROUND LUG

DESIG	EQPT LOC	CODE	ELEM IDENT	OPT
LUG	01-153	GROUND LUG	A	

LEAD DESIG	FUNC	TERM. MOD	TERM.	TERM. OPT	DESTINATION	NOTE
GRDLUG	GRD		080		TO CAD 1 - DN	

SYMBOL NO. 55

POWER LUG

DESIG	EQPT LOC	CODE	ELEM IDENT	OPT
LUG	01-156	POWER LUG	A	

LEAD DESIG	FUNC	TERM. MOD	TERM.	TERM. OPT	DESTINATION	NOTE
-48V05	PWR		180		1/32 TO CAD 1 - DM	

SYMBOL NO. 56

POWER LUG

DESIG	EQPT LOC	CODE	ELEM IDENT	OPT
LUG	01-164	GROUND LUG	A	

LEAD DESIG	FUNC	TERM. MOD	TERM.	TERM. OPT	DESTINATION	NOTE
GRDLUG	GRD		280		TO CAD 1 - DN	

SYMBOL NO. 57

GROUND LUG

DESIG	EQPT LOC	CODE	ELEM IDENT	OPT
LUG	01-169	POWER LUG	A	

LEAD DESIG	FUNC	TERM. MOD	TERM.	TERM. OPT	DESTINATION	NOTE
-48V06	PWR		080		1/38 TO CAD 1 - DM	

SYMBOL NO. 58

POWER LUG

DESIG	EQPT LOC	CODE	ELEM IDENT	OPT
LUG	01-172	POWER LUG	A	

LEAD DESIG	FUNC	TERM. MOD	TERM.	TERM. OPT	DESTINATION	NOTE
-48V07	PWR		380		1/42	206

PART OF FS 1

SYMBOL(S) 54 55 56 57 58

COPYRIGHT (C) 1987 AT&T
ALL RIGHTS RESERVED

LINE UNIT, MODEL 3

DWG SIZE	ISSUE
CZ	1

AT&T BELL LABORATORIES	SD-5D180-01	B1DD

PART OF FS 2

LU3 UPPER SHELF

SYMBOL NO. 1

SERVICE GROUP POWER

DESIG	EQPT LOC	CODE	ELEM IDENT	OPT
1POWER	13-008	494GB	A	

LEAD DESIG	FUNC	TERM. MOD	TERM.	TERM. OPT	DESTINATION	NOTE
+5V04	IO		015		1/1	
+5V13	IO		018		1/1	
	IO		044		1/1	
	IO		045		1/1	
	IO		046		1/1	
	IO		047		1/1	
	IO		048		1/1	
	IO		049		1/1	
	IO		050		1/1	
	IO		051		1/1	
	IO		052		1/1	
	IO		053		1/1	
	IO		054		1/1	
	IO		055		1/1	
	IO		056		1/1	
	IO		118		1/1	
	IO		144		1/1	
	IO		145		1/1	
	IO		146		1/1	
	IO		147		1/1	
	IO		148		1/1	
	IO		149		1/1	
	IO		150		1/1	
	IO		151		1/1	
	IO		152		1/1	
	IO		153		1/1	
	IO		154		1/1	
	IO		155		1/1	
	IO		156		1/1	
-48RTN1C	GRD		115		1/9	
-48V10	PWR		006		2/1	
	PWR		008		2/1	
	PWR		106		2/1	
	PWR		107		2/1	
	PWR		108		2/1	
	PWR		007		2/2,2/3 2/4,2/44 2/45	
-5V1	IO		022		2/1	
	IO		023		2/1	
	IO		122		2/2,2/3 2/4,2/5 2/6,2/7 2/8,2/42	
FGRD	IO		000		1/1	
	IO		001		1/1	
	IO		100		1/1	
	IO		101		1/1	
GRD13008	GRD		003			
	GRD		004			
	GRD		005			
	GRD		024			
	GRD		032			
	GRD		033			
	GRD		034			
	GRD		035			
	GRD		036			
	GRD		037			
	GRD		038			
	GRD		039			
	GRD		040			
	GRD		041			

SYMBOL NO. 1 (CONT)

SERVICE GROUP POWER

DESIG	EQPT LOC	CODE	ELEM IDENT	OPT
1POWER	13-008	494GB	A	

LEAD DESIG	FUNC	TERM. MOD	TERM.	TERM. OPT	DESTINATION	NOTE
	GRD		042			
	GRD		043			
	GRD		102			
	GRD		103			
	GRD		104			
	GRD		119			
	GRD		123			
	GRD		124			
	GRD		132			
	GRD		133			
	GRD		134			
	GRD		135			
	GRD		136			
	GRD		137			
	GRD		138			
	GRD		139			
	GRD		140			
	GRD		141			
	GRD		142			
	GRD		143			
1CURPRN	IO		117		2/2,2/3 2/4,2/5 2/6,2/7 2/8,2/9 2/42	
1CURPRP	IO		017		2/2,2/3 2/4,2/5 2/6,2/7 2/8,2/9 2/42	
1RSON	IO		109			
	IO		110			
164KHZ	IO		120		2/9	

SYMBOL NO. 2

SERVICE CIRCUIT

DESIG	EQPT LOC	CODE	ELEM IDENT	OPT
1HLSC0	13-016	SEE NOTE 309	A	

LEAD DESIG	FUNC	TERM. MOD	TERM.	TERM. OPT	DESTINATION	NOTE
+5V13	IO		034		1/1	
	IO		035		1/1	
	IO		134		1/1	
	IO		135		1/1	
-48V10	PWR		000		2/1	
	PWR		001		2/1	
	PWR		002		2/1	
	PWR		100		2/1	
	PWR		101		2/1	
	PWR		102		2/1	
-5V1	IO		032		2/1	
	IO		132		2/1	
GRD13016	GRD		014			
	GRD		015			
	GRD		016			

SYMBOL NO. 2 (CONT)

SERVICE CIRCUIT

DESIG	EQPT LOC	CODE	ELEM IDENT	OPT
1HLSC0	13-016	SEE NOTE 309	A	

LEAD DESIG	FUNC	TERM. MOD	TERM.	TERM. OPT	DESTINATION	NOTE
	GRD		019			
	GRD		114			
	GRD		115			
	GRD		116			
	GRD		119			
	GRD		200			
	GRD		201			
	GRD		219			
	GRD		224			
	GRD		232			
	GRD		234			
	GRD		235			
	GRD		300			
	GRD		301			
	GRD		319			
	GRD		324			
	GRD		332			
	GRD		334			
	GRD		335			
0ACBUS3R	IO		348		1/10	
0ACBUS3T	IO		248		1/10	
1ACBUS3R	IO		347		2/10,2/11	
1ACBUS3T	IO		247		2/10,2/11	
1CURPRN	IO		012		2/1	
1CURPRP	IO		112		2/1	
1HASW00	IO		323		2/9	
1HASW10	IO		223		2/9	
1HCK0	IO		320		2/9	
1HDATA0	IO		321		2/9	
1HDATA00	IO		318			
	IO		322			
1HDCK0	IO		311			
	IO		313			
1HDW0	IO		215			
	IO		216			
1HEN0	IO		220		2/9	
1HEN00	IO		315			
	IO		316			
1HR0	IO		312			
	IO		314			
1HW0	IO		213			
	IO		214			
1RNGSUP0	IO		317		2/9	
1RNG0	IO		245			
	IO		246			
	IO		250			
1TIP0	IO		345			
	IO		346			
	IO		350			

PART OF FS 2
SYMBOL(S) 1 2

COPYRIGHT (c) 1987 AT&T
ALL RIGHTS RESERVED

LINE UNIT, MODEL 3

DWG SIZE	ISSUE
C2	1

AT&T BELL LABORATORIES	SD-5D180-01	B2CA

PART OF FS 2

LU3 UPPER SHELF

SYMBOL NO. 3

SERVICE CIRCUIT

DESIG	EQPT LOC	CODE	ELEM IDENT	OPT
1HLSC1	13-024	SEE NOTE 309	A	

LEAD DESIG	FUNC	TERM. MOD	TERM.	TERM. OPT	DESTINATION	NOTE
+5V13	IO		034		1/1	
	IO		035		1/1	
	IO		134		1/1	
	IO		135		1/1	
-48V10	PWR		000		2/1	
	PWR		001		2/1	
	PWR		002		2/1	
	PWR		100		2/1	
	PWR		101		2/1	
	PWR		102		2/1	
-5V1	IO		032		2/1	
	IO		132		2/1	
GRD13024	GRD		014			
	GRD		015			
	GRD		016			
	GRD		019			
	GRD		114			
	GRD		115			
	GRD		116			
	GRD		119			
	GRD		200			
	GRD		201			
	GRD		219			
	GRD		224			
	GRD		232			
	GRD		234			
	GRD		235			
	GRD		300			
	GRD		301			
	GRD		319			
	GRD		324			
	GRD		332			
	GRD		334			
	GRD		335			
0ACBUS4R	IO		348		1/10	
0ACBUS4T	IO		248		1/10	
1ACBUS4R	IO		347		2/10,2/11	
1ACBUS4T	IO		247		2/10,2/11	
1CURPRN	IO		012		2/1	
1CURPRP	IO		112		2/1	
1HASW01	IO		323		2/9	
1HASW11	IO		223		2/9	
1HCK1	IO		320		2/9	
1HDATA1	IO		321		2/9	
1HDATA10	IO		318			
	IO		322			
1HDCK1	IO		311			
	IO		313			
1HDW1	IO		215			
	IO		216			
1HEN1	IO		220		2/9	
1HEN10	IO		315			
	IO		316			
1HR1	IO		312			
	IO		314			
1HW1	IO		213			
	IO		214			
1RNGSUP1	IO		317		2/9	
1RNG1	IO		245			
	IO		246			

SYMBOL NO. 3 (CONT)

SERVICE CIRCUIT

DESIG	EQPT LOC	CODE	ELEM IDENT	OPT
1HLSC1	13-024	SEE NOTE 309	A	

LEAD DESIG	FUNC	TERM. MOD	TERM.	TERM. OPT	DESTINATION	NOTE
	IO		250			
1TIP1	IO		345			
	IO		346			
	IO		350			

SYMBOL NO. 4

SERVICE CIRCUIT

DESIG	EQPT LOC	CODE	ELEM IDENT	OPT
1HLSC2	13-032	SEE NOTE 309	A	

LEAD DESIG	FUNC	TERM. MOD	TERM.	TERM. OPT	DESTINATION	NOTE
+5V13	IO		034		1/1	
	IO		035		1/1	
	IO		134		1/1	
	IO		135		1/1	
-48V10	PWR		000		2/1	
	PWR		001		2/1	
	PWR		002		2/1	
	PWR		100		2/1	
	PWR		101		2/1	
	PWR		102		2/1	
-5V1	IO		032		2/1	
	IO		132		2/1	
GRD13032	GRD		014			
	GRD		015			
	GRD		016			
	GRD		019			
	GRD		114			
	GRD		115			
	GRD		116			
	GRD		119			
	GRD		200			
	GRD		201			
	GRD		219			
	GRD		224			
	GRD		232			
	GRD		234			
	GRD		235			
	GRD		300			
	GRD		301			
	GRD		319			
	GRD		324			
	GRD		332			
	GRD		334			
	GRD		335			
0ACBUS5R	IO		348		1/10	
0ACBUS5T	IO		248		1/10	
1ACBUS5R	IO		347		2/10,2/11	
1ACBUS5T	IO		247		2/10,2/11	
1CURPRN	IO		012		2/1	
1CURPRP	IO		112		2/1	
1HASW02	IO		323		2/9	
1HASW12	IO		223		2/9	

SYMBOL NO. 4 (CONT)

SERVICE CIRCUIT

DESIG	EQPT LOC	CODE	ELEM IDENT	OPT
1HLSC2	13-032	SEE NOTE 309	A	

LEAD DESIG	FUNC	TERM. MOD	TERM.	TERM. OPT	DESTINATION	NOTE
1HCK2	IO		320		2/9	
1HDATA2	IO		321		2/9	
1HDATA20	IO		318			
	IO		322			
1HDCK2	IO		311			
	IO		313			
1HDW2	IO		215			
	IO		216			
1HEN2	IO		220		2/9	
1HEN20	IO		315			
	IO		316			
1HR2	IO		312			
	IO		314			
1HW2	IO		213			
	IO		214			
1RNGSUP2	IO		317		2/9	
1RNG2	IO		245			
	IO		246			
	IO		250			
1TIP2	IO		345			
	IO		346			
	IO		350			

SYMBOL NO. 5

CHANNEL CIRCUIT

DESIG	EQPT LOC	CODE	ELEM IDENT	OPT
1CHAN8A0	13-042	SEE NOTE 309	A	

LEAD DESIG	FUNC	TERM. MOD	TERM.	TERM. OPT	DESTINATION	NOTE
+5V13	IO		032		1/1	
	IO		034		1/1	
	IO		035		1/1	
	IO		132		1/1	
	IO		134		1/1	
	IO		135		1/1	
-48V11	PWR		000		2/5	
	PWR		001		2/5	
	PWR		004		2/5	
	PWR		100		2/5	
	PWR		101		2/5	
	PWR		204		2/5	
	PWR		304		2/5	
	PWR		104		2/6,2/7 2/8,2/9 2/10,2/11 2/47	
-5V1	IO		024		2/1	
	IO		124		2/1	
GRD13042	GRD		136			
	GRD		200			
	GRD		201			
	GRD		224			
	GRD		232			

SYMBOL NO. 5 (CONT)

CHANNEL CIRCUIT

DESIG	EQPT LOC	CODE	ELEM IDENT	OPT
1CHAN8A0	13-042	SEE NOTE 309	A	

LEAD DESIG	FUNC	TERM. MOD	TERM.	TERM. OPT	DESTINATION	NOTE
	GRD		234			
	GRD		235			
	GRD		300			
	GRD		301			
	GRD		324			
	GRD		332			
	GRD		334			
	GRD		335			
RNG32	IO		256		2/11	
RNG36	IO		056		2/11	
RNG40	IO		255		2/11	
RNG44	IO		055		2/11	
RNG48	IO		202		2/10	
RNG52	IO		002		2/10	
RNG56	IO		203		2/10	
RNG60	IO		003		2/10	
T1P32	IO		356		2/11	
T1P36	IO		156		2/11	
T1P40	IO		355		2/11	
T1P44	IO		155		2/11	
T1P48	IO		302		2/10	
T1P52	IO		102		2/10	
T1P56	IO		303		2/10	
T1P60	IO		103		2/10	
1CASW00	IO		019		2/5	
	IO		118		2/9	
1CASW10	IO		020			
	IO		041			
1CA0	IO		315		2/5	
	IO		341		2/9	
1CA4	IO		216		2/5	
	IO		241		2/9	
1CB0	IO		242		2/6,2/7 2/8,2/9	
1CB1	IO		342		2/6,2/7 2/8,2/9	
1CB2	IO		316		2/6,2/7 2/8,2/9	
1CB3	IO		217		2/6,2/7 2/8,2/9	
1CDSCLK	IO		244		2/5	
	IO		318		2/6,2/7 2/8,2/9	
1CDSYNC0	IO		123		2/9	
1CDW	IO		238		2/5	
	IO		243		2/5	
	IO		317		2/6,2/7 2/8,2/9	
1CHDA10	IO		320		2/9	
	IO		339		2/5	
1CHDAC0	IO		036		2/9	

PART OF FS 2

SYMBOL(S) 3 4 5

COPYRIGHT (c) 1987 AT&T
ALL RIGHTS RESERVED

LINE UNIT, MODEL 3

DWG SIZE: C2

ISSUE: 1

AT&T BELL LABORATORIES

SD-5D180-01

B2CB

PART OF FS 2

LU3 UPPER SHELF

SYMBOL NO. 5 (CONT)

CHANNEL CIRCUIT

DESIG	EQPT LOC	CODE	ELEM IDENT	OPT
1CHAN8A0	13-042	SEE NOTE 309	A	

LEAD DESIG	FUNC	TERM. MOD	TERM.	TERM. OPT	DESTINATION	NOTE
	IO		220		2/5	
1CHDI	IO		017		2/6,2/7 2/8,2/9	
1CHRD	IO		016		2/6,2/7 2/8,2/9	
1CURPRN	IO		012		2/1	
1CURPRP	IO		112		2/1	
1CW2	IO		218		2/5	
	IO		343		2/6,2/7 2/8,2/9	
1TSA0	IO		139		2/5	
	IO		222		2/9	
1TSA4	IO		236		2/5	
	IO		321		2/9	
1TSB0A	IO		221		2/5	
	IO		336		2/9	
1TSB1A	IO		239		2/9	
1TSB2A	IO		322		2/5	
	IO		338		2/9	
1TSB3A	IO		223		2/9	
14MCK0	IO		323		2/5	
	IO		337		2/9	

SYMBOL NO. 6

CHANNEL CIRCUIT

DESIG	EQPT LOC	CODE	ELEM IDENT	OPT
1CHAN8A1	13-050	SEE NOTE 309	A	

LEAD DESIG	FUNC	TERM. MOD	TERM.	TERM. OPT	DESTINATION	NOTE
+5V13	IO		032		1/1	
	IO		034		1/1	
	IO		035		1/1	
	IO		132		1/1	
	IO		134		1/1	
	IO		135		1/1	
-48V11	PWR		000		2/5	
	PWR		001		2/5	
	PWR		004		2/5	
	PWR		100		2/5	
	PWR		101		2/5	
	PWR		104		2/5	
	PWR		204		2/5	
	PWR		304		2/5	
-5V1	IO		024		2/1	
	IO		124		2/1	
GRD13050	GRD		136			
	GRD		200			
	GRD		201			
	GRD		224			
	GRD		232			
	GRD		234			
	GRD		235			
	GRD		300			

SYMBOL NO. 6 (CONT)

CHANNEL CIRCUIT

DESIG	EQPT LOC	CODE	ELEM IDENT	OPT
1CHAN8A1	13 050	SEE NOTE 309	A	

LEAD DESIG	FUNC	TERM. MOD	TERM.	TERM. OPT	DESTINATION	NOTE
	GRD		301			
	GRD		324			
	GRD		332			
	GRD		334			
	GRD		335			
RNG33	IO		256		2/11	
RNG37	IO		056		2/11	
RNG41	IO		255		2/11	
RNG45	IO		055		2/11	
RNG49	IO		202		2/10	
RNG53	IO		002		2/10	
RNG57	IO		203		2/10	
RNG61	IO		003		2/10	
TIP33	IO		356		2/11	
TIP37	IO		156		2/11	
TIP41	IO		355		2/11	
TIP45	IO		155		2/11	
TIP49	IO		302		2/10	
TIP53	IO		102		2/10	
TIP57	IO		303		2/10	
TIP61	IO		103		2/10	
1CASW01	IO		019			
	IO		118			
1CASW11	IO		020		2/6	
	IO		041		2/9	
1CA1	IO		315		2/9	
	IO		341		2/6	
1CA5	IO		216		2/9	
	IO		241		2/6	
1CB0	IO		242		2/5	
1CB1	IO		342		2/5	
1CB2	IO		316		2/5	
1CB3	IO		217		2/5	
1CDSCLK	IO		244		2/5	
	IO		318		2/5	
1CDSYNC1	IO		123		2/6	
	IO		238		2/9	
1CDW	IO		243		2/5	
	IO		317		2/5	
1CHDA11	IO		320		2/9	
	IO		339		2/6	
1CHDA01	IO		036		2/9	
	IO		220		2/6	
1CHDI	IO		017		2/5	
1CHRD	IO		016		2/5	
1CURPRN	IO		012		2/1	
1CURPRP	IO		112		2/1	
1CW2	IO		218		2/5	
	IO		343		2/5	
1TSA1	IO		139		2/9	
	IO		222		2/6	
1TSA5	IO		236		2/9	
	IO		321		2/6	
1TSB0B	IO		221		2/9	
	IO		336		2/6	
1TSB1B	IO		239		2/9	
1TSB2B	IO		322		2/6	
	IO		338		2/9	
1TSB3B	IO		223		2/9	
14MCK1	IO		323		2/6	

SYMBOL NO. 6 (CONT)

CHANNEL CIRCUIT

DESIG	EQPT LOC	CODE	ELEM IDENT	OPT
1CHAN8A1	13-050	SEE NOTE 309	A	

LEAD DESIG	FUNC	TERM. MOD	TERM.	TERM. OPT	DESTINATION	NOTE
	IO		337		2/9	

SYMBOL NO. 7

CHANNEL CIRCUIT

DESIG	EQPT LOC	CODE	ELEM IDENT	OPT
1CHAN8A2	13-058	SEE NOTE 309	A	

LEAD DESIG	FUNC	TERM. MOD	TERM.	TERM. OPT	DESTINATION	NOTE
+5V13	IO		032		1/1	
	IO		034		1/1	
	IO		035		1/1	
	IO		132		1/1	
	IO		134		1/1	
	IO		135		1/1	
-48V11	PWR		000		2/5	
	PWR		001		2/5	
	PWR		004		2/5	
	PWR		100		2/5	
	PWR		101		2/5	
	PWR		104		2/5	
	PWR		204		2/5	
	PWR		304		2/5	
-5V1	IO		024		2/1	
	IO		124		2/1	
GRD13058	GRD		136			
	GRD		200			
	GRD		201			
	GRD		224			
	GRD		232			
	GRD		234			
	GRD		235			
	GRD		300			
	GRD		301			
	GRD		324			
	GRD		332			
	GRD		334			
	GRD		335			
RNG34	IO		256		2/11	
RNG38	IO		056		2/11	
RNG42	IO		255		2/11	
RNG46	IO		055		2/11	
RNG50	IO		202		2/10	
RNG54	IO		002		2/10	
RNG58	IO		203		2/10	
RNG62	IO		003		2/10	
TIP34	IO		356		2/11	
TIP38	IO		156		2/11	
TIP42	IO		355		2/11	
TIP46	IO		155		2/11	
TIP50	IO		302		2/10	
TIP54	IO		102		2/10	
TIP58	IO		303		2/10	
TIP62	IO		103		2/10	

SYMBOL NO. 7 (CONT)

CHANNEL CIRCUIT

DESIG	EQPT LOC	CODE	ELEM IDENT	OPT
1CHAN8A2	13-058	SEE NOTE 309	A	

LEAD DESIG	FUNC	TERM. MOD	TERM.	TERM. OPT	DESTINATION	NOTE
1CASW02	IO		019		2/9	
	IO		118		2/7	
1CASW12	IO		020			
	IO		041			
1CA2	IO		315		2/9	
	IO		341		2/7	
1CA6	IO		216		2/7	
	IO		241		2/9	
1CB0	IO		242		2/5	
1CB1	IO		342		2/5	
1CB2	IO		316		2/5	
1CB3	IO		217		2/5	
1CDSCLK	IO		244		2/5	
	IO		318		2/5	
1CDSYNC2	IO		123		2/7	
	IO		238		2/9	
1CDW	IO		243		2/5	
	IO		317		2/5	
1CHDA12	IO		320		2/7	
	IO		339		2/9	
1CHDA02	IO		036		2/9	
	IO		220		2/7	
1CHDI	IO		017		2/5	
1CHRD	IO		016		2/5	
1CURPRN	IO		012		2/1	
1CURPRP	IO		112		2/1	
1CW2	IO		218		2/5	
	IO		343		2/5	
1TSA2	IO		139		2/7	
	IO		222		2/9	
1TSA6	IO		236		2/7	
	IO		321		2/9	
1TSB0C	IO		221		2/9	
	IO		336		2/7	
1TSB1C	IO		239		2/9	
1TSB2C	IO		322		2/7	
	IO		338		2/9	
1TSB3C	IO		223		2/9	
14MCK2	IO		323		2/9	
	IO		337		2/7	

PART OF FS 2

SYMBOL(S) 5 6 7

COPYRIGHT (c) 1987 AT&T
ALL RIGHTS RESERVED

LINE UNIT, MODEL 3

DWG SIZE: D2

ISSUE: 1

AT&T BELL LABORATORIES

SD-5D180-01

B2CC

PART OF FS 2

LU3 UPPER SHELF

SYMBOL NO. 8

CHANNEL CIRCUIT

DESIG	EQPT LOC	CODE	ELEM IDENT	OPT
1CHAN8A3	13-066	SEE NOTE 309	A	

LEAD DESIG	FUNC	TERM. MOD	TERM.	TERM. OPT	DESTINATION	NOTE
+5V13	IO		032		1/1	
	IO		034		1/1	
	IO		035		1/1	
	IO		132		1/1	
	IO		134		1/1	
	IO		135		1/1	
-48V11	PWR		000		2/5	
	PWR		001		2/5	
	PWR		004		2/5	
	PWR		100		2/5	
	PWR		101		2/5	
	PWR		104		2/5	
	PWR		204		2/5	
	PWR		304		2/5	
-5V1	IO		024		2/1	
	IO		124		2/1	
GRD13066	GRD		136			
	GRD		200			
	GRD		201			
	GRD		224			
	GRD		232			
	GRD		234			
	GRD		235			
	GRD		300			
	GRD		301			
	GRD		324			
	GRD		332			
	GRD		334			
	GRD		335			
RNG35	IO		256		2/11	
RNG39	IO		056		2/11	
RNG43	IO		255		2/11	
RNG47	IO		055		2/11	
RNG51	IO		202		2/10	
RNG55	IO		002		2/10	
RNG59	IO		203		2/10	
RNG63	IO		003		2/10	
TIP35	IO		356		2/11	
TIP39	IO		156		2/11	
TIP43	IO		355		2/11	
TIP47	IO		155		2/11	
TIP51	IO		302		2/10	
TIP55	IO		102		2/10	
TIP59	IO		303		2/10	
TIP63	IO		103		2/10	
1CASW03	IO		019			
	IO		118			
1CASW13	IO		020		2/8	
	IO		041		2/9	
1CA3	IO		315		2/8	
	IO		341		2/9	
1CA7	IO		216		2/8	
	IO		241		2/9	
1CB0	IO		242		2/5	
1CB1	IO		342		2/5	
1CB2	IO		316		2/5	
1CB3	IO		217		2/5	
1CDSCLK	IO		244		2/5	
1CDSYNC3	IO		123		2/9	

SYMBOL NO. 8 (CONT)

CHANNEL CIRCUIT

DESIG	EQPT LOC	CODE	ELEM IDENT	OPT
1CHAN8A3	13-066	SEE NOTE 309	A	

LEAD DESIG	FUNC	TERM. MOD	TERM.	TERM. OPT	DESTINATION	NOTE
	IO		238		2/8	
1CDW	IO		243		2/5	
	IO		317		2/5	
1CHDA13	IO		320		2/8	
	IO		339		2/9	
1CHDA03	IO		036		2/8	
	IO		220		2/9	
1CHD1	IO		017		2/5	
1CHRD	IO		016		2/5	
1CURPRN	IO		012		2/1	
1CURPRP	IO		112		2/1	
1CW2	IO		218		2/5	
	IO		343		2/5	
1TSA3	IO		139		2/9	
	IO		222		2/8	
1TSA7	IO		236		2/9	
	IO		321		2/8	
1TSA9D	IO		221		2/9	
	IO		336		2/8	
1TSB1D	IO		239		2/9	
1TSB2D	IO		322		2/9	
	IO		338		2/8	
1TSB3D	IO		223		2/9	
14MCK3	IO		323		2/8	
	IO		337		2/9	

SYMBOL NO. 9

COMMON DATA AND CONTROL

DESIG	EQPT LOC	CODE	ELEM IDENT	OPT
1COMDAC	13-074	UN322	A	(J)
1COMDAC	13-074	UN402	A	(G)

LEAD DESIG	FUNC	TERM. MOD	TERM.	TERM. OPT	DESTINATION	NOTE
+5V13	IO		249		1/1	
	IO		250		1/1	
	IO		251		1/1	
	IO		252		1/1	
	IO		253		1/1	
	IO		254		1/1	
	IO		255		1/1	
	IO		256		1/1	
-48RTNDC	GRD		248		1/1	
-48V11	PWR		000		2/5	
	PWR		100		2/5	
	PWR		200		2/5	
FGRD	IO		047		1/1	
	IO		147		1/1	
	IO		347		1/1	
	IO		447		1/1	
GRD13074	GRD		013			
	GRD		023			
	GRD		035			
	GRD		124			
	GRD		133			

SYMBOL NO. 9 (CONT)

COMMON DATA AND CONTROL

DESIG	EQPT LOC	CODE	ELEM IDENT	OPT
1COMDAC	13-074	UN322	A	(J)
1COMDAC	13-074	UN402	A	(G)

LEAD DESIG	FUNC	TERM. MOD	TERM.	TERM. OPT	DESTINATION	NOTE
	GRD		208			
	GRD		211			
	GRD		213			
	GRD		219			
	GRD		223			
	GRD		246			
	GRD		300			
	GRD		301			
	GRD		332			
	GRD		336			
	GRD		400			
	GRD		401			
	GRD		412			
	GRD		500			
	GRD		501			
	GRD		508			
	GRD		512			
	GRD		521			
	GRD		524			
	GRD		536			
	GRD		540			
	GRD		547			
	GRD		548			
	GRD		549			
	GRD		550			
	GRD		551			
	GRD		552			
	GRD		553			
	GRD		554			
	GRD		555			
	GRD		556			
0ANLED	IO		247		1/11	
1AASW0	IO		008		2/42	
1AASW1	IO		308		2/42	
1ACASW0	IO		106		2/11	
1ACASW1	IO		406		2/10	
1ACCK0	IO		544		2/11	
1ACCK1	IO		345		2/10	
1ACDATA0	IO		533		2/11	
1ACDATA1	IO		334		2/10	
1ACEN0	IO		144		2/11	
1ACEN1	IO		244		2/10	
1ASWG00	IO		002		1/14	
1ASWG01	IO		302		1/17	
1ASWG10	IO		102		2/14	
1ASWG11	IO		402		2/17	
1ASWG20	IO		202		1/20	
1ASWG21	IO		502		1/23	
1ASWG30	IO		003		2/20	
1ASWG31	IO		303		2/23	
1ASWG40	IO		103		1/26	
1ASWG41	IO		403		1/29	
1ASWG50	IO		203		2/26	
1ASWG51	IO		503		2/29	
1ASWG60	IO		004		1/32	
1ASWG61	IO		304		1/35	
1ASWG70	IO		104		2/32	
1ASWG71	IO		404		2/35	
1ASWG80	IO		206		1/38	
1ASWG81	IO		307		1/41	

SYMBOL NO. 9 (CONT)

COMMON DATA AND CONTROL

DESIG	EQPT LOC	CODE	ELEM IDENT	OPT
1COMDAC	13-074	UN322	A	(J)
1COMDAC	13-074	UN402	A	(G)

LEAD DESIG	FUNC	TERM. MOD	TERM.	TERM. OPT	DESTINATION	NOTE
1ASW090	IO		107		2/38	
1ASW091	IO		507		2/41	
1CASW00	IO		204		2/5	
1CASW02	IO		005		2/7	
1CASW11	IO		504		2/6	
1CASW13	IO		305		2/8	
1CA0	IO		020		2/5	
1CA1	IO		120		2/6	
1CA2	IO		220		2/7	
1CA3	IO		021		2/8	
1CA4	IO		121		2/5	
1CA5	IO		221		2/6	
1CA6	IO		022		2/7	
1CA7	IO		122		2/8	
1CB0	IO		108		2/5	
1CB1	IO		212		2/5	
1CB2	IO		119		2/5	
1CB3	IO		222		2/5	
1CDSCLK	IO		024		2/5	
1CDSYNC0	IO		233		2/5	
1CDSYNC1	IO		034		2/6	
1CDSYNC2	IO		134		2/7	
1CDSYNC3	IO		234		2/8	
1CDW	IO		224		2/5	
1CHDA10	IO		236		2/5	
1CHDA11	IO		037		2/6	
1CHDA12	IO		137		2/7	
1CHDA13	IO		237		2/8	
1CHDA00	IO		135		2/5	
1CHDA01	IO		235		2/6	
1CHDA02	IO		036		2/7	
1CHDA03	IO		136		2/8	
1CHD1	IO		001		2/5	
1CHRD	IO		101		2/5	
1CLAUX	IO		546		2/42	
1CLG0	IO		341		1/14	
1CLG1	IO		441		2/14,2/17	
1CLG2	IO		541		1/20	
1CLG3	IO		342		2/20,2/23	
1CLG4	IO		442		1/26	
1CLG5	IO		542		2/26,2/29	
1CLG6	IO		343		1/32	
1CLG7	IO		443		2/32,2/35	
1CLHG80	IO		445		1/38	
1CLHG81	IO		545		1/41	
1CLHG90	IO		346		2/36	
1CLHG91	IO		446		2/41	
1CLKON	IO		050		TO CAD 1 - DD	
1CLKOP	IO		150		TO CAD 1 - DD	

PART OF FS 2

SYMBOL(S) 8 9

COPYRIGHT (c) 1987 AT&T
ALL RIGHTS RESERVED

LINE UNIT, MODEL 3

DWG SIZE: C2

ISSUE: 2M

AT&T BELL LABORATORIES

SD-5D180-01

B2CD

PART OF FS 2

LU3 UPPER SHELF

SYMBOL NO. 9 (CONT)

COMMON DATA AND CONTROL

DESIG	EQPT LOC	CODE	ELEM IDENT	OPT
1COMDAC	13-074	UN322	A	(J)
1COMDAC	13-074	UN402	A	(G)

LEAD DESIG	FUNC	TERM. MOD	TERM.	TERM. OPT	DESTINATION	NOTE
1CLK1N	IO		350		TO CAD 1 - DF	
1CLK1P	IO		450		TO CAD 1 - DF	
1CURPRN	IO		012		2/1	
1CURPRP	IO		112		2/1	
1DHZ	IO		123		2/5	
1DAINON	IO		153		TO CAD 1 - DH	
1DAINOP	IO		053		TO CAD 1 - DH	
1DAIN1N	IO		453		TO CAD 1 - DJ	
1DAIN1P	IO		353		TO CAD 1 - DJ	
1DAOTON	IO		154		TO CAD 1 - DH	
1DAOTOP	IO		054		TO CAD 1 - DH	
1DAOT1N	IO		454		TO CAD 1 - DJ	
1DAOT1P	IO		354		TO CAD 1 - DJ	
1DAUX	IO		535		2/42	
1DG0	IO		322		1/14	
1DG1	IO		422		2/14,2/17	
1DG2	IO		522		1/20	
1DG3	IO		323		2/20,2/23	
1DG4	IO		423		1/26	
1DG5	IO		523		2/26,2/29	
1DG6	IO		324		1/32	
1DG7	IO		424		2/32,2/35	
1DG80	IO		434		1/38	
1DG81	IO		534		1/41	
1DG90	IO		335		2/38	
1DG91	IO		435		2/41	
1EAUX	IO		146		2/42	
1EG00	IO		038		1/14	
1EG01	IO		138		1/17	
1EG10	IO		238		2/14	
1EG11	IO		039		2/17	
1EG20	IO		139		1/20	
1EG21	IO		239		1/23	
1EG30	IO		040		2/20	
1EG31	IO		140		2/23	
1EG40	IO		240		1/26	
1EG41	IO		041		1/29	
1EG50	IO		141		2/26	
1EG51	IO		241		2/29	
1EG60	IO		042		1/32	
1EG61	IO		142		1/35	
1EG70	IO		242		2/32	
1EG71	IO		043		2/35	
1EG80	IO		045		1/38	
1EG81	IO		145		1/41	
1EG90	IO		245		2/38	
1EG91	IO		046		2/41	
1HASH00	IO		105		2/2	
1HASH01	IO		205		2/3	
1HASH02	IO		006		2/4	
1HASH10	IO		405		2/2	
1HASH11	IO		505		2/3	
1HASH12	IO		306		2/4	
1HCK0	IO		543		2/2	
1HCK1	IO		344		2/3	
1HCK2	IO		444		2/4	
1HDATA0	IO		532		2/2	
1HDATA1	IO		333		2/3	
1HDATA2	IO		433		2/4	

SYMBOL NO. 9 (CONT)

COMMON DATA AND CONTROL

DESIG	EQPT LOC	CODE	ELEM IDENT	OPT
1COMDAC	13-074	UN322	A	(J)
1COMDAC	13-074	UN402	A	(G)

LEAD DESIG	FUNC	TERM. MOD	TERM.	TERM. OPT	DESTINATION	NOTE
1HEN0	IO		143		2/2	
1HEN1	IO		243		2/3	
1HEN2	IO		044		2/4	
1MSG0N	IO		051		TO CAD 1 - DD	
1MSG0P	IO		151		TO CAD 1 - DD	
1MSG1N	IO		351		TO CAD 1 - DF	
1MSG1P	IO		451		TO CAD 1 - DF	
1NINTON	IO		048		TO CAD 1 - DD	
1NINTOP	IO		148		TO CAD 1 - DD	
1NINT1N	IO		348		TO CAD 1 - DF	
1NINT1P	IO		448		TO CAD 1 - DF	
1PAA	IO		421		2/42	
1PAG00	IO		313		1/14	
1PAG01	IO		413		1/17	
1PAG10	IO		513		2/14	
1PAG11	IO		314		2/17	
1PAG20	IO		414		1/20	
1PAG21	IO		514		1/23	
1PAG30	IO		315		2/20	
1PAG31	IO		415		2/23	
1PAG40	IO		515		1/26	
1PAG41	IO		316		1/29	
1PAG50	IO		416		2/26	
1PAG51	IO		516		2/29	
1PAG60	IO		317		1/32	
1PAG61	IO		417		1/35	
1PAG70	IO		517		2/32	
1PAG71	IO		318		2/35	
1PAG80	IO		320		1/38	
1PAG81	IO		420		1/41	
1PAG90	IO		520		2/38	
1PAG91	IO		321		2/41	
1PRALM0	IO		419		2/11	
1RNGSUP0	IO		418		2/2	
1RNGSUP1	IO		518		2/3	
1RNGSUP2	IO		319		2/4	
1RPLYON	IO		052		TO CAD 1 - DD	
1RPLYOP	IO		152		TO CAD 1 - DD	
1RPLY1N	IO		352		TO CAD 1 - DF	
1RPLY1P	IO		452		TO CAD 1 - DF	
1SLCTON	IO		049		TO CAD 1 - DD	
1SLCTOP	IO		149		TO CAD 1 - DD	
1SLCT1N	IO		349		TO CAD 1 - DF	
1SLCT1P	IO		449		TO CAD 1 - DF	
1SLG0	IO		337		1/14	
1SLG1	IO		437		2/14,2/17	
1SLG2	IO		537		1/20	
1SLG3	IO		338		2/20,2/23	
1SLG4	IO		438		1/26	
1SLG5	IO		538		2/26,2/29	
1SLG6	IO		339		1/32	
1SLG7	IO		439		2/32,2/35	
1SLG8	IO		539		1/38	
1SLG9	IO		340		2/38,2/41	
1TSA0	IO		009		2/5	
1TSA1	IO		109		2/6	
1TSA2	IO		209		2/7	
1TSA3	IO		010		2/8	
1TSA4	IO		110		2/5	
1TSA5	IO		210		2/6	

SYMBOL NO. 9 (CONT)

COMMON DATA AND CONTROL

DESIG	EQPT LOC	CODE	ELEM IDENT	OPT
1COMDAC	13-074	UN322	A	(J)
1COMDAC	13-074	UN402	A	(G)

LEAD DESIG	FUNC	TERM. MOD	TERM.	TERM. OPT	DESTINATION	NOTE
1TSA6	IO		011		2/7	
1TSA7	IO		111		2/8	
1TSB0A	IO		014		2/5	
1TSB0B	IO		114		2/6	
1TSB0C	IO		214		2/7	
1TSB0D	IO		015		2/8	
1TSB1A	IO		115		2/5	
1TSB1B	IO		215		2/6	
1TSB1C	IO		016		2/7	
1TSB1D	IO		116		2/8	
1TSB2A	IO		216		2/5	
1TSB2B	IO		017		2/6	
1TSB2C	IO		117		2/7	
1TSB2D	IO		217		2/8	
1TSB3A	IO		018		2/5	
1TSB3B	IO		118		2/6	
1TSB3C	IO		218		2/7	
1TSB3D	IO		019		2/8	
1256KHZ0	IO		309		1/14	
1256KHZ1	IO		409		2/14,2/17	
1256KHZ2	IO		509		1/20	
1256KHZ3	IO		310		2/20,2/23	
1256KHZ4	IO		410		1/26	
1256KHZ5	IO		510		2/26,2/29	
1256KHZ6	IO		311		1/32	
1256KHZ7	IO		411		2/32,2/35	
1256KHZ8	IO		511		1/38	
1256KHZ9	IO		312		2/38,2/41	
14MCKION	IO		156		TO CAD 1 - DH	
14MCKIOP	IO		056		TO CAD 1 - DH	
14MCKI1N	IO		456		TO CAD 1 - DJ	
14MCKI1P	IO		356		TO CAD 1 - DJ	
14MCK0	IO		032		2/5	
14MCK1	IO		132		2/6	
14MCK2	IO		232		2/7	
14MCK3	IO		033		2/8	
164KHZ	IO		113		2/1	
18KSNCON	IO		155		TO CAD 1 - DH	
18KSNCOP	IO		055		TO CAD 1 - DH	
18KSNC1N	IO		455		TO CAD 1 - DJ	
18KSNC1P	IO		355		TO CAD 1 - DJ	

PART OF FS 2

SYMBOL(S) 9

COPYRIGHT (c) 1987 AT&T
ALL RIGHTS RESERVED

LINE UNIT, MODEL 3

DWG SIZE C2

ISSUE 2M

AT&T BELL LABORATORIES

SD-5D180-01

B2CE

PART OF FS 2

LU3 UPPER SHELF

SYMBOL NO. 10

ACCESS LINERIZATION

DESIG	EQPT LOC	CODE	ELEM IDENT	OPT
1GDXAXL	13-084	TN831	A	

LEAD DESIG	FUNC	TERM. MOD	TERM.	TERM. OPT	DESTINATION	NOTE
+260V1	IO		306		2/11	
+295V1	IO		207		2/10	
	IO		307		2/11	
	IO		354		2/10	
+297V1	IO		206		2/11	
+300VR1	IO		007		2/11	
	IO		107		2/10	
+5V1	IO		001		2/11	
	IO		101		2/10	
-48V11	PWR		003		2/5	
	PWR		004		2/5	
GRD13084	GRD		000			
	GRD		005			
	GRD		006			
	GRD		033			
	GRD		034			
	GRD		100			
	GRD		105			
	GRD		106			
	GRD		133			
	GRD		134			
	GRD		200			
	GRD		203			
	GRD		204			
	GRD		300			
	GRD		301			
	GRD		302			
	GRD		303			
	GRD		304			
RB48	IO		235		1/14	
RB49	IO		234		1/17	
RB50	IO		035		1/14	
RB51	IO		236		1/17	
RB52	IO		036		1/14	
RB53	IO		241		1/17	
RB54	IO		242		1/14	
RB55	IO		243		1/17	
RB56	IO		214		1/17	
RB57	IO		213		1/14	
RB58	IO		014		1/17	
RB59	IO		215		1/14	
RB60	IO		015		1/17	
RB61	IO		220		1/14	
RB62	IO		221		1/17	
RB63	IO		222		1/14	
RNG48	IO		038		2/5	
RNG49	IO		037		2/6	
RNG50	IO		238		2/7	
RNG51	IO		237		2/8	
RNG52	IO		239		2/5	
RNG53	IO		240		2/6	
RNG54	IO		039		2/7	
RNG55	IO		040		2/8	
RNG56	IO		017		2/5	
RNG57	IO		016		2/6	
RNG58	IO		217		2/7	
RNG59	IO		216		2/8	
RNG60	IO		218		2/5	
RNG61	IO		219		2/6	
RNG62	IO		018		2/7	

SYMBOL NO. 10 (CONT)

ACCESS LINERIZATION

DESIG	EQPT LOC	CODE	ELEM IDENT	OPT
1GDXAXL	13-084	TN831	A	

LEAD DESIG	FUNC	TERM. MOD	TERM.	TERM. OPT	DESTINATION	NOTE
RNG63	IO		019		2/8	
TB48	IO		335		1/14	
TB49	IO		334		1/17	
TB50	IO		135		1/14	
TB51	IO		336		1/17	
TB52	IO		136		1/14	
TB53	IO		341		1/17	
TB54	IO		342		1/14	
TB55	IO		343		1/17	
TB56	IO		314		1/17	
TB57	IO		313		1/14	
TB58	IO		114		1/17	
TB59	IO		315		1/14	
TB60	IO		115		1/17	
TB61	IO		320		1/14	
TB62	IO		321		1/17	
TB63	IO		322		1/14	
TIP48	IO		138		2/5	
TIP49	IO		137		2/6	
TIP50	IO		338		2/7	
TIP51	IO		337		2/8	
TIP52	IO		339		2/5	
TIP53	IO		340		2/6	
TIP54	IO		139		2/7	
TIP55	IO		140		2/8	
TIP56	IO		117		2/5	
TIP57	IO		116		2/6	
TIP58	IO		317		2/7	
TIP59	IO		316		2/8	
TIP60	IO		318		2/5	
TIP61	IO		319		2/6	
TIP62	IO		118		2/7	
TIP63	IO		119		2/8	
1ACASW1	IO		051		2/9	
1ACBUSOR	IO		310		1/2	
1ACBUSOT	IO		210		1/2	
1ACBUS1R	IO		209		1/3	
1ACBUS1T	IO		309		1/3	
1ACBUS2R	IO		010		1/4	
1ACBUS2T	IO		110		1/4	
1ACBUS3R	IO		109		2/2	
1ACBUS3T	IO		009		2/2	
1ACBUS4R	IO		146		2/3	
1ACBUS4T	IO		046		2/3	
1ACBUS5R	IO		346		2/4	
1ACBUS5T	IO		246		2/4	
1ACBUS6R	IO		232		2/11	
1ACBUS6T	IO		332		2/11	
1ACBUS7R	IO		032		2/11	
1ACBUS7T	IO		132		2/11	
1ACCK1	IO		353		2/9	
1ACDATA1	IO		352		2/9	
1ACEN1	IO		153		2/9	
1MTBR	IO		324		TO CAD 1 - DL	
1MTBT	IO		224		TO CAD 1 - DL	

SYMBOL NO. 11

ACCESS POWER AND CONTROL

DESIG	EQPT LOC	CODE	ELEM IDENT	OPT
1GDXAXP	13-092	TN832	A	

LEAD DESIG	FUNC	TERM. MOD	TERM.	TERM. OPT	DESTINATION	NOTE
+260V1	IO		105		2/10	
+295V1	IO		207		2/10	
	IO		307		2/10	
	IO		354		2/10	
+297V1	IO		206		2/10	
+300VR1	IO		007		2/10	
	IO		107		2/10	
+300VSG0	IO		006		1/11	
+300VSG1	IO		106		1/11	
+5V1	IO		001		2/10	
	IO		101		2/10	
-5V13	IO		056		1/1	
-48V11	PWR		003		2/5	
	PWR		004		2/5	
GRD13092	GRD		000			
	GRD		033			
	GRD		034			
	GRD		100			
	GRD		133			
	GRD		134			
	GRD		200			
	GRD		203			
	GRD		204			
	GRD		252			
	GRD		300			
	GRD		301			
	GRD		302			
	GRD		303			
	GRD		304			
RB32	IO		235		1/17	
RB33	IO		234		1/14	
RB34	IO		035		1/17	
RB35	IO		236		1/14	
RB36	IO		036		1/17	
RB37	IO		241		1/14	
RB38	IO		242		1/17	
RB39	IO		243		1/14	
RB40	IO		214		1/14	
RB41	IO		213		1/17	
RB42	IO		014		1/14	
RB43	IO		215		1/17	
RB44	IO		015		1/14	
RB45	IO		220		1/17	
RB46	IO		221		1/14	
RB47	IO		222		1/17	
RNG32	IO		038		2/5	
RNG33	IO		037		2/6	
RNG34	IO		238		2/7	
RNG35	IO		237		2/8	
RNG36	IO		239		2/5	
RNG37	IO		240		2/6	
RNG38	IO		039		2/7	
RNG39	IO		040		2/8	
RNG40	IO		017		2/5	
RNG41	IO		016		2/6	
RNG42	IO		217		2/7	
RNG43	IO		216		2/8	
RNG44	IO		218		2/5	
RNG45	IO		219		2/6	
RNG46	IO		018		2/7	

SYMBOL NO. 11 (CONT)

ACCESS POWER AND CONTROL

DESIG	EQPT LOC	CODE	ELEM IDENT	OPT
1GDXAXP	13-092	TN832	A	

LEAD DESIG	FUNC	TERM. MOD	TERM.	TERM. OPT	DESTINATION	NOTE
RNG47	IO		019		2/8	
TB32	IO		335		1/17	
TB33	IO		334		1/14	
TB34	IO		135		1/17	
TB35	IO		336		1/14	
TB36	IO		136		1/17	
TB37	IO		341		1/14	
TB38	IO		342		1/17	
TB39	IO		343		1/14	
TB40	IO		314		1/14	
TB41	IO		313		1/17	
TB42	IO		114		1/14	
TB43	IO		315		1/17	
TB44	IO		115		1/14	
TB45	IO		320		1/17	
TB46	IO		321		1/14	
TB47	IO		322		1/17	
TIP32	IO		138		2/5	
TIP33	IO		137		2/6	
TIP34	IO		338		2/7	
TIP35	IO		337		2/8	
TIP36	IO		339		2/5	
TIP37	IO		340		2/6	
TIP38	IO		139		2/7	
TIP39	IO		140		2/8	
TIP40	IO		117		2/5	
TIP41	IO		116		2/6	
TIP42	IO		317		2/7	
TIP43	IO		316		2/8	
TIP44	IO		318		2/5	
TIP45	IO		319		2/6	
TIP46	IO		118		2/7	
TIP47	IO		119		2/8	
1ACASW0	IO		051		2/9	
1ACBUS0R	IO		310		1/2	
1ACBUS0T	IO		210		1/2	
1ACBUS1R	IO		209		1/3	
1ACBUS1T	IO		309		1/3	
1ACBUS2R	IO		010		1/4	
1ACBUS2T	IO		110		1/4	
1ACBUS3R	IO		109		2/2	
1ACBUS3T	IO		009		2/2	
1ACBUS4R	IO		146		2/3	
1ACBUS4T	IO		046		2/3	
1ACBUS5R	IO		346		2/4	
1ACBUS5T	IO		246		2/4	
1ACBUS6R	IO		232		2/10	
1ACBUS6T	IO		332		2/10	
1ACBUS7R	IO		032		2/10	
1ACBUS7T	IO		132		2/10	

PART OF FS 2

SYMBOL(S) 10 11

COPYRIGHT (c) 1987 AT&T
ALL RIGHTS RESERVED

LINE UNIT, MODEL 3	DWG SIZE C2	ISSUE 1
AT&T BELL LABORATORIES	SD-5D180-01	B2CF

PART OF FS 2

LU3 UPPER SHELF

SYMBOL NO. 11 (CONT)

ACCESS POWER AND CONTROL

DESIG	EQPT LOC	CODE	ELEM IDENT	OPT
1GDXAXP	13-092	TN832	A	

LEAD DESIG	FUNC	TERM. MOD	TERM.	TERM. OPT	DESTINATION	NOTE
1ACCK0	IO		353		2/9	
1ACDATA0	IO		352		2/9	
1ACENO	IO		153		2/9	
1ANLED	IO		154		1/9	
1PRALM0	IO		251		2/9	

SYMBOL NO. 12

TERMINAL FIELD

DESIG	EQPT LOC	CODE	ELEM IDENT	OPT
TF	13-098	TERMINAL FIELD	A	

LEAD DESIG	FUNC	TERM. MOD	TERM.	TERM. OPT	DESTINATION	NOTE
R1000	IO		002		2/14 TO CAD 1 - AI	
R1001	IO		003		2/14 TO CAD 1 - AI	
R1002	IO		004		2/14 TO CAD 1 - AI	
R1003	IO		005		2/14 TO CAD 1 - AI	
R1010	IO		006		2/14 TO CAD 1 - AI	
R1011	IO		007		2/14 TO CAD 1 - AI	
R1012	IO		008		2/14 TO CAD 1 - AI	
R1013	IO		009		2/14 TO CAD 1 - AI	
R1020	IO		015		2/14 TO CAD 1 - AJ	
R1021	IO		016		2/14 TO CAD 1 - AJ	
R1022	IO		017		2/14 TO CAD 1 - AJ	
R1023	IO		018		2/14 TO CAD 1 - AJ	
R1030	IO		019		2/14 TO CAD 1 - AJ	
R1031	IO		020		2/14 TO CAD 1 - AJ	
R1032	IO		021		2/14 TO CAD 1 - AJ	
R1033	IO		022		2/14 TO CAD 1 - AJ	
R1040	IO		034		2/14 TO CAD 1 - AK	
R1041	IO		035		2/14 TO CAD 1 - AK	
R1042	IO		036		2/14 TO CAD 1 - AK	
R1043	IO		037		2/14 TO CAD 1 - AK	
R1050	IO		038		2/14 TO CAD 1 - AK	
R1051	IO		039		2/14 TO CAD 1 - AK	
R1052	IO		040		2/14 TO CAD 1 - AK	
R1053	IO		041		2/14 TO CAD 1 - AK	

SYMBOL NO. 12 (CONT)

TERMINAL FIELD

DESIG	EQPT LOC	CODE	ELEM IDENT	OPT
TF	13-098	TERMINAL FIELD	A	

LEAD DESIG	FUNC	TERM. MOD	TERM.	TERM. OPT	DESTINATION	NOTE
R1060	IO		047		2/14 TO CAD 1 - AL	
R1061	IO		048		2/14 TO CAD 1 - AL	
R1062	IO		049		2/14 TO CAD 1 - AL	
R1063	IO		050		2/14 TO CAD 1 - AL	
R1070	IO		051		2/14 TO CAD 1 - AL	
R1071	IO		052		2/14 TO CAD 1 - AL	
R1072	IO		053		2/14 TO CAD 1 - AL	
R1073	IO		054		2/14 TO CAD 1 - AL	

SYMBOL NO. 13

TERMINAL FIELD

DESIG	EQPT LOC	CODE	ELEM IDENT	OPT
TF	13-099	TERMINAL FIELD	A	

LEAD DESIG	FUNC	TERM. MOD	TERM.	TERM. OPT	DESTINATION	NOTE
T1000	IO		002		2/14 TO CAD 1 - AI	
T1001	IO		003		2/14 TO CAD 1 - AI	
T1002	IO		004		2/14 TO CAD 1 - AI	
T1003	IO		005		2/14 TO CAD 1 - AI	
T1010	IO		006		2/14 TO CAD 1 - AI	
T1011	IO		007		2/14 TO CAD 1 - AI	
T1012	IO		008		2/14 TO CAD 1 - AI	
T1013	IO		009		2/14 TO CAD 1 - AI	
T1020	IO		015		2/14 TO CAD 1 - AJ	
T1021	IO		016		2/14 TO CAD 1 - AJ	
T1022	IO		017		2/14 TO CAD 1 - AJ	
T1023	IO		018		2/14 TO CAD 1 - AJ	
T1030	IO		019		2/14 TO CAD 1 - AJ	
T1031	IO		020		2/14 TO CAD 1 - AJ	
T1032	IO		021		2/14 TO CAD 1 - AJ	
T1033	IO		022		2/14 TO CAD 1 - AJ	
T1040	IO		034		2/14 TO CAD 1 - AK	
T1041	IO		035		2/14 TO CAD 1 - AK	

SYMBOL NO. 13 (CONT)

TERMINAL FIELD

DESIG	EQPT LOC	CODE	ELEM IDENT	OPT
TF	13-099	TERMINAL FIELD	A	

LEAD DESIG	FUNC	TERM. MOD	TERM.	TERM. OPT	DESTINATION	NOTE
T1042	IO		036		2/14 TO CAD 1 - AK	
T1043	IO		037		2/14 TO CAD 1 - AK	
T1050	IO		038		2/14 TO CAD 1 - AK	
T1051	IO		039		2/14 TO CAD 1 - AK	
T1052	IO		040		2/14 TO CAD 1 - AK	
T1053	IO		041		2/14 TO CAD 1 - AK	
T1060	IO		047		2/14 TO CAD 1 - AL	
T1061	IO		048		2/14 TO CAD 1 - AL	
T1062	IO		049		2/14 TO CAD 1 - AL	
T1063	IO		050		2/14 TO CAD 1 - AL	
T1070	IO		051		2/14 TO CAD 1 - AL	
T1071	IO		052		2/14 TO CAD 1 - AL	
T1072	IO		053		2/14 TO CAD 1 - AL	
T1073	IO		054		2/14 TO CAD 1 - AL	

SYMBOL NO. 14

HALF GRID

DESIG	EQPT LOC	CODE	ELEM IDENT	OPT
GDXHG2	13-100	SEE NOTE 309	A	

LEAD DESIG	FUNC	TERM. MOD	TERM.	TERM. OPT	DESTINATION	NOTE
*300V00	IO		006		1/14	
*300V01	IO		106		1/14	
*5V04	IO		001		1/1	
*5V13	IO		101		1/1	
-48V12	PWR		004		2/14	
	PWR		003		2/17,2/49	
GRD13100	GRD		000			
	GRD		036			
	GRD		036			
	GRD		037			
	GRD		037			
	GRD		055			
	GRD		056			
	GRD		100			
	GRD		136			
	GRD		136			
	GRD		137			
	GRD		137			
	GRD		140			
	GRD		141			
	GRD		155			
	GRD		156			
	GRD		200			
	GRD		203			
	GRD		204			
	GRD		206			
	GRD		207			
	GRD		208			
	GRD		255			
	GRD		256			
	GRD		300			
	GRD		301			
	GRD		302			
	GRD		303			
	GRD		304			
	GRD		306			
	GRD		307			
	GRD		308			
	GRD		355			
	GRD		356			
RB0	IO		017		1/11	
RB1	IO		019		1/11	
RB10	IO		218		1/11	
RB11	IO		220		1/11	
RB14	IO		022		1/11	
RB15	IO		024		1/11	
RB16	IO		032		1/10	
RB17	IO		034		1/10	
RB20	IO		242		1/10	
RB21	IO		244		1/10	
RB26	IO		233		1/10	
RB27	IO		235		1/10	
RB30	IO		043		1/10	
RB31	IO		045		1/10	
RB34	IO		217		1/17	
RB35	IO		219		1/14	
RB38	IO		021		1/17	
RB39	IO		023		1/14	
RB4	IO		221		1/11	
RB40	IO		018		1/14	
RB41	IO		020		1/17	
RB44	IO		222		1/14	
RB45	IO		224		1/17	
RB5	IO		223		1/11	
RB50	IO		232		1/14	
RB51	IO		234		1/17	
RB54	IO		042		1/14	
RB55	IO		044		1/17	
RB56	IO		033		1/17	
RB57	IO		035		1/14	
RB60	IO		243		1/17	

PART OF FS 2

SYMBOL(S) 11 12 13 14

COPYRIGHT (c) 1987 AT&T
ALL RIGHTS RESERVED

LINE UNIT, MODEL 3

DWG SIZE: D2

ISSUE: 1

AT&T BELL LABORATORIES

SD-5D180-01

B2CG

PART OF FS 2

LU3 UPPER SHELF

SYMBOL NO. 14 (CONT)

HALF GRID

DESIG	EQPT LOC	CODE	ELEM IDENT	OPT
GDXHG2	13-100	SEE NOTE 309	A	

LEAD DESIG	FUNC	TERM. MOD	TERM.	TERM. OPT	DESTINATION	NOTE
RB61	IO		245		1/14	
R1000	IO		010		2/12	
R1001	IO		011		2/12	
R1002	IO		213		2/12	
R1003	IO		215		2/12	
R1010	IO		014		2/12	
R1011	IO		016		2/12	
R1012	IO		210		2/12	
R1013	IO		212		2/12	
R1020	IO		013		2/12	
R1021	IO		015		2/12	
R1022	IO		209		2/12	
R1023	IO		211		2/12	
R1030	IO		009		2/12	
R1031	IO		012		2/12	
R1032	IO		214		2/12	
R1033	IO		216		2/12	
R1040	IO		353		2/12	
R1041	IO		351		2/12	
R1042	IO		349		2/12	
R1043	IO		347		2/12	
R1050	IO		152		2/12	
R1051	IO		150		2/12	
R1052	IO		148		2/12	
R1053	IO		146		2/12	
R1060	IO		153		2/12	
R1061	IO		151		2/12	
R1062	IO		149		2/12	
R1063	IO		147		2/12	
R1070	IO		352		2/12	
R1071	IO		350		2/12	
R1072	IO		348		2/12	
R1073	IO		346		2/12	
TB0	IO		117		1/11	
TB1	IO		119		1/11	
TB10	IO		318		1/11	
TB11	IO		320		1/11	
TB14	IO		122		1/11	
TB15	IO		124		1/11	
TB16	IO		132		1/10	
TB17	IO		134		1/10	
TB20	IO		342		1/10	
TB21	IO		344		1/10	
TB26	IO		333		1/10	
TB27	IO		335		1/10	
TB30	IO		143		1/10	
TB31	IO		145		1/10	
TB34	IO		317		1/17	
TB35	IO		319		1/14	
TB38	IO		121		1/17	
TB39	IO		123		1/14	
TB4	IO		321		1/11	
TB40	IO		118		1/14	
TB41	IO		120		1/17	
TB44	IO		322		1/14	
TB45	IO		324		1/17	
TB5	IO		323		1/11	
TB50	IO		332		1/14	

SYMBOL NO. 14 (CONT)

HALF GRID

DESIG	EQPT LOC	CODE	ELEM IDENT	OPT
GDXHG2	13-100	SEE NOTE 309	A	

LEAD DESIG	FUNC	TERM. MOD	TERM.	TERM. OPT	DESTINATION	NOTE
TB51	IO		334		1/17	
TB54	IO		142		1/14	
TB55	IO		144		1/17	
TB56	IO		133		1/17	
TB57	IO		135		1/14	
TB60	IO		343		1/17	
TB61	IO		345		1/14	
T1000	IO		110		2/13	
T1001	IO		111		2/13	
T1002	IO		313		2/13	
T1003	IO		315		2/13	
T1010	IO		114		2/13	
T1011	IO		116		2/13	
T1012	IO		310		2/13	
T1013	IO		312		2/13	
T1020	IO		113		2/13	
T1021	IO		115		2/13	
T1022	IO		309		2/13	
T1023	IO		311		2/13	
T1030	IO		109		2/13	
T1031	IO		112		2/13	
T1032	IO		314		2/13	
T1033	IO		316		2/13	
T1040	IO		253		2/13	
T1041	IO		251		2/13	
T1042	IO		249		2/13	
T1043	IO		247		2/13	
T1050	IO		052		2/13	
T1051	IO		050		2/13	
T1052	IO		048		2/13	
T1053	IO		046		2/13	
T1060	IO		053		2/13	
T1061	IO		051		2/13	
T1062	IO		049		2/13	
T1063	IO		047		2/13	
T1070	IO		252		2/13	
T1071	IO		250		2/13	
T1072	IO		248		2/13	
T1073	IO		246		2/13	
0ASHG10	IO		237		1/9	
0CLG1	IO		241		1/9	
0DG1	IO		338		1/9	
0EG10	IO		341		1/9	
0PAG10	IO		236		1/9	
0SLG1	IO		240		1/9	
0Z56KHZ1	IO		038		1/9	
1ASHG10	IO		337		2/9	
1CLG1	IO		339		2/9	
1DG1	IO		238		2/9	
1EG10	IO		239		2/9	
1PAG10	IO		336		2/9	
1SLG1	IO		340		2/9	
1256KHZ1	IO		138		2/9	

SYMBOL NO. 15

TERMINAL FIELD

DESIG	EQPT LOC	CODE	ELEM IDENT	OPT
TF	13-106	TERMINAL FIELD	A	

LEAD DESIG	FUNC	TERM. MOD	TERM.	TERM. OPT	DESTINATION	NOTE
R1100	IO		002		2/17 TO CAD 1 - AM	
R1101	IO		003		2/17 TO CAD 1 - AM	
R1102	IO		004		2/17 TO CAD 1 - AM	
R1103	IO		005		2/17 TO CAD 1 - AM	
R1110	IO		006		2/17 TO CAD 1 - AM	
R1111	IO		007		2/17 TO CAD 1 - AM	
R1112	IO		008		2/17 TO CAD 1 - AM	
R1113	IO		009		2/17 TO CAD 1 - AM	
R1120	IO		015		2/17 TO CAD 1 - AN	
R1121	IO		016		2/17 TO CAD 1 - AN	
R1122	IO		017		2/17 TO CAD 1 - AN	
R1123	IO		018		2/17 TO CAD 1 - AN	
R1130	IO		019		2/17 TO CAD 1 - AN	
R1131	IO		020		2/17 TO CAD 1 - AN	
R1132	IO		021		2/17 TO CAD 1 - AN	
R1133	IO		022		2/17 TO CAD 1 - AN	
R1140	IO		034		2/17 TO CAD 1 - AO	
R1141	IO		035		2/17 TO CAD 1 - AO	
R1142	IO		036		2/17 TO CAD 1 - AO	
R1143	IO		037		2/17 TO CAD 1 - AO	
R1150	IO		038		2/17 TO CAD 1 - AO	
R1151	IO		039		2/17 TO CAD 1 - AO	
R1152	IO		040		2/17 TO CAD 1 - AO	
R1153	IO		041		2/17 TO CAD 1 - AO	
R1160	IO		047		2/17 TO CAD 1 - AP	
R1161	IO		048		2/17 TO CAD 1 - AP	
R1162	IO		049		2/17 TO CAD 1 - AP	
R1163	IO		050		2/17 TO CAD 1 - AP	
R1170	IO		051		2/17 TO CAD 1 - AP	
R1171	IO		052		2/17 TO CAD 1 - AP	
R1172	IO		053		2/17 TO CAD 1 - AP	
R1173	IO		054		2/17 TO CAD 1 - AP	

PART OF FS 2

SYMBOL(S) 14 15

COPYRIGHT (C) 1987 AT&T
ALL RIGHTS RESERVED

LINE UNIT, MODEL 3

DWG SIZE	ISSUE
c2	1

AT&T BELL LABORATORIES	SD-5D180-01	B2CH

PART OF FS 2

LU3 UPPER SHELF

SYMBOL NO. 16

TERMINAL FIELD

DESIG	EQPT LOC	CODE	ELEM IDENT	OPT
TF	13-107	TERMINAL FIELD	A	

LEAD DESIG	FUNC	TERM. MOD	TERM.	TERM. OPT	DESTINATION	NOTE
T1100	IO		002		2/17 TO CAD 1 - AM	
T1101	IO		003		2/17 TO CAD 1 - AM	
T1102	IO		004		2/17 TO CAD 1 - AM	
T1103	IO		005		2/17 TO CAD 1 - AM	
T1110	IO		006		2/17 TO CAD 1 - AM	
T1111	IO		007		2/17 TO CAD 1 - AM	
T1112	IO		008		2/17 TO CAD 1 - AM	
T1113	IO		009		2/17 TO CAD 1 - AM	
T1120	IO		015		2/17 TO CAD 1 - AN	
T1121	IO		016		2/17 TO CAD 1 - AN	
T1122	IO		017		2/17 TO CAD 1 - AN	
T1123	IO		018		2/17 TO CAD 1 - AN	
T1130	IO		019		2/17 TO CAD 1 - AN	
T1131	IO		020		2/17 TO CAD 1 - AN	
T1132	IO		021		2/17 TO CAD 1 - AN	
T1133	IO		022		2/17 TO CAD 1 - AN	
T1140	IO		034		2/17 TO CAD 1 - AO	
T1141	IO		035		2/17 TO CAD 1 - AO	
T1142	IO		036		2/17 TO CAD 1 - AO	
T1143	IO		037		2/17 TO CAD 1 - AO	
T1150	IO		038		2/17 TO CAD 1 - AO	
T1151	IO		039		2/17 TO CAD 1 - AO	
T1152	IO		040		2/17 TO CAD 1 - AO	
T1153	IO		041		2/17 TO CAD 1 - AO	
T1160	IO		047		2/17 TO CAD 1 - AP	
T1161	IO		048		2/17 TO CAD 1 - AP	
T1162	IO		049		2/17 TO CAD 1 - AP	
T1163	IO		050		2/17 TO CAD 1 - AP	
T1170	IO		051		2/17 TO CAD 1 - AP	
T1171	IO		052		2/17 TO CAD 1 - AP	
T1172	IO		053		2/17 TO CAD 1 - AP	
T1173	IO		054		2/17 TO CAD 1 - AP	

SYMBOL NO. 17

HALF GRID

DESIG	EQPT LOC	CODE	ELEM IDENT	OPT
GDXHG3	13-108	SEE NOTE 309	A	

LEAD DESIG	FUNC	TERM. MOD	TERM.	TERM. OPT	DESTINATION	NOTE
+300V02	IO		006		1/17	
+300V03	IO		106		1/17	
+5V04	IO		001		1/1	
+5V13	IO		101		1/1	
-48V12	PWR		003		2/14	
	PWR		004		2/14	
GRD13108	GRD		000			
	GRD		036			
	GRD		036			
	GRD		037			
	GRD		037			
	GRD		055			
	GRD		056			
	GRD		100			
	GRD		136			
	GRD		136			
	GRD		137			
	GRD		137			
	GRD		140			
	GRD		141			
	GRD		155			
	GRD		156			
	GRD		200			
	GRD		203			
	GRD		204			
	GRD		206			
	GRD		207			
	GRD		208			
	GRD		255			
	GRD		256			
	GRD		300			
	GRD		301			
	GRD		302			
	GRD		303			
	GRD		304			
	GRD		306			
	GRD		307			
	GRD		308			
	GPD		355			
	GRD		356			
RB12	IO		222		1/11	
RB13	IO		224		1/11	
RB18	IO		232		1/10	
RB19	IO		234		1/10	
RB2	IO		217		1/11	
RB22	IO		042		1/10	
RB23	IO		044		1/10	
RB24	IO		033		1/10	
RB25	IO		035		1/10	
RB28	IO		243		1/10	
RB29	IO		245		1/10	
RB3	IO		219		1/11	
RB32	IO		017		1/17	
RB33	IO		019		1/14	
RB36	IO		221		1/17	
RB37	IO		223		1/14	
RB42	IO		218		1/14	
RB43	IO		220		1/17	
RB46	IO		022		1/14	
RB47	IO		024		1/17	

SYMBOL NO. 17 (CONT)

HALF GRID

DESIG	EQPT LOC	CODE	ELEM IDENT	OPT
GDXHG3	13-108	SEE NOTE 309	A	

LEAD DESIG	FUNC	TERM. MOD	TERM.	TERM. OPT	DESTINATION	NOTE
RB48	IO		032		1/14	
RB49	IO		034		1/17	
RB52	IO		242		1/14	
RB53	IO		244		1/17	
RB58	IO		233		1/17	
RB59	IO		235		1/14	
RB6	IO		021		1/11	
RB62	IO		043		1/17	
RB63	IO		045		1/14	
RB7	IO		023		1/11	
RB8	IO		018		1/11	
RB9	IO		020		1/11	
R1100	IO		010		2/15	
R1101	IO		011		2/15	
R1102	IO		213		2/15	
R1103	IO		215		2/15	
R1110	IO		014		2/15	
R1111	IO		016		2/15	
R1112	IO		210		2/15	
R1113	IO		212		2/15	
R1120	IO		013		2/15	
R1121	IO		015		2/15	
R1122	IO		209		2/15	
R1123	IO		211		2/15	
R1130	IO		009		2/15	
R1131	IO		012		2/15	
R1132	IO		214		2/15	
R1133	IO		216		2/15	
R1140	IO		353		2/15	
R1141	IO		351		2/15	
R1142	IO		349		2/15	
R1143	IO		347		2/15	
R1150	IO		152		2/15	
R1151	IO		150		2/15	
R1152	IO		148		2/15	
R1153	IO		146		2/15	
R1160	IO		153		2/15	
R1161	IO		151		2/15	
R1162	IO		149		2/15	
R1163	IO		147		2/15	
R1170	IO		352		2/15	
R1171	IO		350		2/15	
R1172	IO		348		2/15	
R1173	IO		346		2/15	
TB12	IO		322		1/11	
TB13	IO		324		1/11	
TB18	IO		332		1/10	
TB19	IO		334		1/10	
TB2	IO		317		1/11	
TB22	IO		142		1/10	
TB23	IO		144		1/10	
TB24	IO		133		1/10	
TB25	IO		135		1/10	
TB28	IO		343		1/10	
TB29	IO		345		1/10	
TB3	IO		319		1/11	
TB32	IO		117		1/17	
TB33	IO		119		1/14	
TB36	IO		321		1/17	
TB37	IO		323		1/14	

SYMBOL NO. 17 (CONT)

HALF GRID

DESIG	EQPT LOC	CODE	ELEM IDENT	OPT
GDXHG3	13-108	SEE NOTE 309	A	

LEAD DESIG	FUNC	TERM. MOD	TERM.	TERM. OPT	DESTINATION	NOTE
TB42	IO		318		1/14	
TB43	IO		320		1/17	
TB46	IO		122		1/14	
TB47	IO		124		1/17	
TB48	IO		132		1/14	
TB49	IO		134		1/17	
TB52	IO		342		1/14	
TB53	IO		344		1/17	
TB58	IO		333		1/17	
TB59	IO		335		1/14	
TB6	IO		121		1/11	
TB62	IO		143		1/17	
TB63	IO		145		1/14	
TB7	IO		123		1/11	
TB8	IO		118		1/11	
TB9	IO		120		1/11	
T1100	IO		110		2/16	
T1101	IO		111		2/16	
T1102	IO		313		2/16	
T1103	IO		315		2/16	
T1110	IO		114		2/16	
T1111	IO		116		2/16	
T1112	IO		310		2/16	
T1113	IO		312		2/16	
T1120	IO		113		2/16	
T1121	IO		115		2/16	
T1122	IO		309		2/16	
T1123	IO		311		2/16	
T1130	IO		109		2/16	
T1131	IO		112		2/16	
T1132	IO		314		2/16	
T1133	IO		316		2/16	
T1140	IO		253		2/16	
T1141	IO		251		2/16	
T1142	IO		249		2/16	
T1143	IO		247		2/16	
T1150	IO		052		2/16	
T1151	IO		050		2/16	
T1152	IO		048		2/16	
T1153	IO		046		2/16	
T1160	IO		053		2/16	
T1161	IO		051		2/16	
T1162	IO		049		2/16	
T1163	IO		047		2/16	
T1170	IO		252		2/16	
T1171	IO		250		2/16	
T1172	IO		248		2/16	
T1173	IO		246		2/16	
0ASWG11	IO		237		1/9	
0CLG1	IO		241		1/9	

PART OF FS 2

SYMBOL(S) 16 17

COPYRIGHT (C) 1987 AT&T
ALL RIGHTS RESERVED

LINE UNIT, MODEL 3

DWG SIZE: D

ISSUE: 1

AT&T BELL LABORATORIES | SD-5D180-01 | B2CJ

PART OF FS 2

LU3 UPPER SHELF

SYMBOL NO. 17 (CONT)

HALF GRID

DESIG	EQPT LOC	CODE	ELEM IDENT	OPT
GDXHG3	13-108	SEE NOTE 309	A	

LEAD DESIG	FUNC	TERM. MOD	TERM.	TERM. OPT	DESTINATION	NOTE
0DG1	IO		338		1/9	
0EG11	IO		341		1/9	
0PAG11	IO		236		1/9	
0SLG1	IO		240		1/9	
0256KHZ1	IO		038		1/9	
1ASWG11	IO		337		2/9	
1CLG1	IO		339		2/9	
1DG1	IO		238		2/9	
1EG11	IO		239		2/9	
1PAG11	IO		336		2/9	
1SLG1	IO		340		2/9	
1256KHZ1	IO		138		2/9	

SYMBOL NO. 18

TERMINAL FIELD

DESIG	EQPT LOC	CODE	ELEM IDENT	OPT
TF	13-114	TERMINAL FIELD	A	

LEAD DESIG	FUNC	TERM. MOD	TERM.	TERM. OPT	DESTINATION	NOTE
R3000	IO		002		2/20 TO CAD 1 - AY	
R3001	IO		003		2/20 TO CAD 1 - AY	
R3002	IO		004		2/20 TO CAD 1 - AY	
R3003	IO		005		2/20 TO CAD 1 - AY	
R3010	IO		006		2/20 TO CAD 1 - AY	
R3011	IO		007		2/20 TO CAD 1 - AY	
R3012	IO		008		2/20 TO CAD 1 - AY	
R3013	IO		009		2/20 TO CAD 1 - AY	
R3020	IO		015		2/20 TO CAD 1 - AZ	
R3021	IO		016		2/20 TO CAD 1 - AZ	
R3022	IO		017		2/20 TO CAD 1 - AZ	
R3023	IO		018		2/20 TO CAD 1 - AZ	
R3030	IO		019		2/20 TO CAD 1 - AZ	
R3031	IO		020		2/20 TO CAD 1 - AZ	
R3032	IO		021		2/20 TO CAD 1 - AZ	
R3033	IO		022		2/20 TO CAD 1 - AZ	
R3040	IO		034		2/20 TO CAD 1 - BA	
R3041	IO		035		2/20 TO CAD 1 - BA	
R3042	IO		036		2/20 TO CAD 1 - BA	
R3043	IO		037		2/20 TO CAD 1 - BA	
R3050	IO		038		2/20 TO CAD 1 - BA	

SYMBOL NO. 18 (CONT)

TERMINAL FIELD

DESIG	EQPT LOC	CODE	ELEM IDENT	OPT
TF	13-114	TERMINAL FIELD	A	

LEAD DESIG	FUNC	TERM. MOD	TERM.	TERM. OPT	DESTINATION	NOTE
					TO CAD 1 - BA	
R3051	IO		039		2/20 TO CAD 1 - BA	
R3052	IO		040		2/20 TO CAD 1 - BA	
R3053	IO		041		2/20 TO CAD 1 - BA	
R3060	IO		047		2/20 TO CAD 1 - BB	
R3061	IO		048		2/20 TO CAD 1 - BB	
R3062	IO		049		2/20 TO CAD 1 - BB	
R3063	IO		050		2/20 TO CAD 1 - BB	
R3070	IO		051		2/20 TO CAD 1 - BB	
R3071	IO		052		2/20 TO CAD 1 - BB	
R3072	IO		053		2/20 TO CAD 1 - BB	
R3073	IO		054		2/20 TO CAD 1 - BB	

SYMBOL NO. 19

TERMINAL FIELD

DESIG	EQPT LOC	CODE	ELEM IDENT	OPT
TF	13-115	TERMINAL FIELD	A	

LEAD DESIG	FUNC	TERM. MOD	TERM.	TERM. OPT	DESTINATION	NOTE
T3000	IO		002		2/20 TO CAD 1 - AY	
T3001	IO		003		2/20 TO CAD 1 - AY	
T3002	IO		004		2/20 TO CAD 1 - AY	
T3003	IO		005		2/20 TO CAD 1 - AY	
T3010	IO		006		2/20 TO CAD 1 - AY	
T3011	IO		007		2/20 TO CAD 1 - AY	
T3012	IO		008		2/20 TO CAD 1 - AY	
T3013	IO		009		2/20 TO CAD 1 - AY	
T3020	IO		015		2/20 TO CAD 1 - AZ	
T3021	IO		016		2/20 TO CAD 1 - AZ	
T3022	IO		017		2/20 TO CAD 1 - AZ	
T3023	IO		018		2/20 TO CAD 1 - AZ	
T3030	IO		019		2/20 TO CAD 1 - AZ	
T3031	IO		020		2/20 TO CAD 1 - AZ	
T3032	IO		021		2/20 TO CAD 1 - AZ	

SYMBOL NO. 19 (CONT)

TERMINAL FIELD

DESIG	EQPT LOC	CODE	ELEM IDENT	OPT
TF	13-115	TERMINAL FIELD	A	

LEAD DESIG	FUNC	TERM. MOD	TERM.	TERM. OPT	DESTINATION	NOTE
T3033	IO		022		2/20 TO CAD 1 - AZ	
T3040	IO		034		2/20 TO CAD 1 - BA	
T3041	IO		035		2/20 TO CAD 1 - BA	
T3042	IO		036		2/20 TO CAD 1 - BA	
T3043	IO		037		2/20 TO CAD 1 - BA	
T3050	IO		038		2/20 TO CAD 1 - BA	
T3051	IO		039		2/20 TO CAD 1 - BA	
T3052	IO		040		2/20 TO CAD 1 - BA	
T3053	IO		041		2/20 TO CAD 1 - BA	
T3060	IO		047		2/20 TO CAD 1 - BB	
T3061	IO		048		2/20 TO CAD 1 - BB	
T3062	IO		049		2/20 TO CAD 1 - BB	
T3063	IO		050		2/20 TO CAD 1 - BB	
T3070	IO		051		2/20 TO CAD 1 - BB	
T3071	IO		052		2/20 TO CAD 1 - BB	
T3072	IO		053		2/20 TO CAD 1 - BB	
T3073	IO		054		2/20 TO CAD 1 - BB	

SYMBOL NO. 20

HALF GRID

DESIG	EQPT LOC	CODE	ELEM IDENT	OPT
GDXHG6	13-116	SEE NOTE 309	A	

LEAD DESIG	FUNC	TERM. MOD	TERM.	TERM. OPT	DESTINATION	NOTE
+300V04	IO		006		1/20	
+300V05	IO		106		1/20	
+5V04	IO		001		1/1	
+5V13	IO		101		1/1	
-48V13	PWR		003		2/20	
	PWR		004		2/23,2/51	
GRD13116	GRD		000			
	GRD		036			
	GRD		036			
	GRD		037			
	GRD		037			
	GRD		055			
	GRD		056			
	GRD		100			
	GRD		136			

SYMBOL NO. 20 (CONT)

HALF GRID

DESIG	EQPT LOC	CODE	ELEM IDENT	OPT
GDXHG6	13-116	SEE NOTE 309	A	

LEAD DESIG	FUNC	TERM. MOD	TERM.	TERM. OPT	DESTINATION	NOTE
	GRD		136			
	GRD		137			
	GRD		137			
	GRD		140			
	GRD		141			
	GRD		155			
	GRD		156			
	GRD		200			
	GRD		203			
	GRD		204			
	GRD		206			
	GRD		207			
	GRD		208			
	GRD		255			
	GRD		256			
	GRD		300			
	GRD		301			
	GRD		302			
	GRD		303			
	GRD		304			
	GRD		306			
	GRD		307			
	GRD		308			
	GRD		355			
	GRD		356			
RB0	IO		017			1/11
RB10	IO		218			1/11
RB12	IO		222			1/11
RB15	IO		024			1/11
RB16	IO		032			1/10
RB19	IO		234			1/10
RB21	IO		244			1/10
RB22	IO		042			1/10
RB25	IO		035			1/10
RB26	IO		233			1/10
RB28	IO		243			1/10
RB3	IO		219			1/11
RB31	IO		045			1/10
RB33	IO		019			1/14
RB34	IO		217			1/17
RB36	IO		221			1/17
RB39	IO		023			1/14
RB40	IO		018			1/14
RB43	IO		220			1/17
RB45	IO		224			1/17
RB46	IO		022			1/14
RB49	IO		034			1/17
RB5	IO		223			1/11
RB50	IO		232			1/14
RB52	IO		242			1/14

PART OF FS 2

SYMBOL(S) 17 18 19 20

COPYRIGHT (C) 1987 AT&T
ALL RIGHTS RESERVED

LINE UNIT, MODEL 3

DWG SIZE	ISSUE
D2	1

AT&T BELL LABORATORIES	SD-5D180-01	B2CK

PART OF FS 2

LU3 UPPER SHELF

SYMBOL NO. 20 (CONT)

HALF GRID

DESIG	EQPT LOC	CODE	ELEM IDENT	OPT
GDXHG6	13-116	SEE NOTE 309	A	

LEAD DESIG	FUNC	TERM. MOD	TERM.	TERM. OPT	DESTINATION	NOTE
RB55	IO		044		1/17	
RB56	IO		033		1/17	
RB59	IO		235		1/14	
RB6	IO		021		1/11	
RB61	IO		245		1/14	
RB62	IO		043		1/17	
RB9	IO		020		1/11	
R3000	IO		010		2/18	
R3001	IO		011		2/18	
R3002	IO		213		2/18	
R3003	IO		215		2/18	
R3010	IO		014		2/18	
R3011	IO		016		2/18	
R3012	IO		210		2/18	
R3013	IO		212		2/18	
R3020	IO		013		2/18	
R3021	IO		015		2/18	
R3022	IO		209		2/18	
R3023	IO		211		2/18	
R3030	IO		009		2/18	
R3031	IO		012		2/18	
R3032	IO		214		2/18	
R3033	IO		216		2/18	
R3040	IO		353		2/18	
R3041	IO		351		2/18	
R3042	IO		349		2/18	
R3043	IO		347		2/18	
R3050	IO		152		2/18	
R3051	IO		150		2/18	
R3052	IO		148		2/18	
R3053	IO		146		2/18	
R3060	IO		153		2/18	
R3061	IO		151		2/18	
R3062	IO		149		2/18	
R3063	IO		147		2/18	
R3070	IO		352		2/18	
R3071	IO		350		2/18	
R3072	IO		348		2/18	
R3073	IO		346		2/18	
TB0	IO		117		1/11	
TB10	IO		318		1/11	
TB12	IO		322		1/11	
TB15	IO		124		1/11	
TB16	IO		132		1/10	
TB19	IO		334		1/10	
TB21	IO		344		1/10	
TB22	IO		142		1/10	
TB25	IO		135		1/10	
TB26	IO		333		1/10	
TB28	IO		343		1/10	
TB3	IO		319		1/11	
TB31	IO		145		1/10	
TB33	IO		119		1/14	
TB34	IO		317		1/17	
TB36	IO		321		1/17	
TB39	IO		123		1/14	
TB40	IO		118		1/14	
TB43	IO		320		1/17	

SYMBOL NO. 20 (CONT)

HALF GRID

DESIG	EQPT LOC	CODE	ELEM IDENT	OPT
GDXHG6	13-116	SEE NOTE 309	A	

LEAD DESIG	FUNC	TERM. MOD	TERM.	TERM. OPT	DESTINATION	NOTE
TB45	IO		324		1/17	
TB46	IO		122		1/14	
TB49	IO		134		1/17	
TB5	IO		323		1/11	
TB50	IO		332		1/14	
TB52	IO		342		1/14	
TB55	IO		144		1/17	
TB56	IO		133		1/17	
TB59	IO		335		1/14	
TB6	IO		121		1/11	
TB61	IO		345		1/14	
TB62	IO		143		1/17	
TB9	IO		120		1/11	
T3000	IO		110		2/19	
T3001	IO		111		2/19	
T3002	IO		313		2/19	
T3003	IO		315		2/19	
T3010	IO		114		2/19	
T3011	IO		116		2/19	
T3012	IO		310		2/19	
T3013	IO		312		2/19	
T3020	IO		113		2/19	
T3021	IO		115		2/19	
T3022	IO		309		2/19	
T3023	IO		311		2/19	
T3030	IO		109		2/19	
T3031	IO		112		2/19	
T3032	IO		314		2/19	
T3033	IO		316		2/19	
T3040	IO		253		2/19	
T3041	IO		251		2/19	
T3042	IO		249		2/19	
T3043	IO		247		2/19	
T3050	IO		052		2/19	
T3051	IO		050		2/19	
T3052	IO		048		2/19	
T3053	IO		046		2/19	
T3060	IO		053		2/19	
T3061	IO		051		2/19	
T3062	IO		049		2/19	
T3063	IO		047		2/19	
T3070	IO		252		2/19	
T3071	IO		250		2/19	
T3072	IO		248		2/19	
T3073	IO		246		2/19	
0ASHG30	IO		237		1/9	
0CLG3	IO		241		1/9	
0DG3	IO		338		1/9	
0EG30	IO		341		1/9	
0PAG30	IO		236		1/9	
0SLG3	IO		240		1/9	
0Z56KHZ3	IO		038		1/9	
1ASHG30	IO		337		2/9	
1CLG3	IO		339		2/9	
1DG3	IO		238		2/9	
1EG30	IO		239		2/9	
1PAG30	IO		336		2/9	
1SLG3	IO		340		2/9	
1Z56KHZ3	IO		138		2/9	

SYMBOL NO. 21

TERMINAL FIELD

DESIG	EQPT LOC	CODE	ELEM IDENT	OPT
TF	13-122	TERMINAL FIELD	A	

LEAD DESIG	FUNC	TERM. MOD	TERM.	TERM. OPT	DESTINATION	NOTE
R3100	IO		002		2/23 TO CAD 1 - BC	
R3101	IO		003		2/23 TO CAD 1 - BC	
R3102	IO		004		2/23 TO CAD 1 - BC	
R3103	IO		005		2/23 TO CAD 1 - BC	
R3110	IO		006		2/23 TO CAD 1 - BC	
R3111	IO		007		2/23 TO CAD 1 - BC	
R3112	IO		008		2/23 TO CAD 1 - BC	
R3113	IO		009		2/23 TO CAD 1 - BC	
R3120	IO		015		2/23 TO CAD 1 - BD	
R3121	IO		016		2/23 TO CAD 1 - BD	
R3122	IO		017		2/23 TO CAD 1 - BD	
R3123	IO		018		2/23 TO CAD 1 - BD	
R3130	IO		019		2/23 TO CAD 1 - BD	
R3131	IO		020		2/23 TO CAD 1 - BD	
R3132	IO		021		2/23 TO CAD 1 - BD	
R3133	IO		022		2/23 TO CAD 1 - BD	
R3140	IO		034		2/23 TO CAD 1 - BE	
R3141	IO		035		2/23 TO CAD 1 - BE	
R3142	IO		036		2/23 TO CAD 1 - BE	
R3143	IO		037		2/23 TO CAD 1 - BE	
R3150	IO		038		2/23 TO CAD 1 - BE	
R3151	IO		039		2/23 TO CAD 1 - BE	
R3152	IO		040		2/23 TO CAD 1 - BE	
R3153	IO		041		2/23 TO CAD 1 - BE	
R3160	IO		047		2/23 TO CAD 1 - BF	
R3161	IO		048		2/23 TO CAD 1 - BF	
R3162	IO		049		2/23 TO CAD 1 - BF	
R3163	IO		050		2/23 TO CAD 1 - BF	
R3170	IO		051		2/23 TO CAD 1 - BF	
R3171	IO		052		2/23 TO CAD 1 - BF	
R3172	IO		053		2/23 TO CAD 1 - BF	
R3173	IO		054		2/23 TO CAD 1 - BF	

PART OF FS 2

SYMBOL(S) 20 21

COPYRIGHT (C) 1987 AT&T
ALL RIGHTS RESERVED

LINE UNIT, MODEL 3

DWG SIZE	ISSUE
C2	1

AT&T BELL LABORATORIES	SD-5D180-01	B2CL

PART OF FS 2

LU3 UPPER SHELF

SYMBOL NO. 22

TERMINAL FIELD

DESIG	EQPT LOC	CODE	ELEM IDENT	OPT
TF	13-123	TERMINAL FIELD	A	

LEAD DESIG	FUNC	TERM. MOD	TERM.	TERM. OPT	DESTINATION	NOTE
T3100	IO		002		2/23 TO CAD 1 - BC	
T3101	IO		003		2/23 TO CAD 1 - BC	
T3102	IO		004		2/23 TO CAD 1 - BC	
T3103	IO		005		2/23 TO CAD 1 - BC	
T3110	IO		006		2/23 TO CAD 1 - BC	
T3111	IO		007		2/23 TO CAD 1 - BC	
T3112	IO		008		2/23 TO CAD 1 - BC	
T3113	IO		009		2/23 TO CAD 1 - BC	
T3120	IO		015		2/23 TO CAD 1 - BD	
T3121	IO		016		2/23 TO CAD 1 - BD	
T3122	IO		017		2/23 TO CAD 1 - BD	
T3123	IO		018		2/23 TO CAD 1 - BD	
T3130	IO		019		2/23 TO CAD 1 - BD	
T3131	IO		020		2/23 TO CAD 1 - BD	
T3132	IO		021		2/23 TO CAD 1 - BD	
T3133	IO		022		2/23 TO CAD 1 - BD	
T3140	IO		034		2/23 TO CAD 1 - BE	
T3141	IO		035		2/23 TO CAD 1 - BE	
T3142	IO		036		2/23 TO CAD 1 - BE	
T3143	IO		037		2/23 TO CAD 1 - BE	
T3150	IO		038		2/23 TO CAD 1 - BE	
T3151	IO		039		2/23 TO CAD 1 - BE	
T3152	IO		040		2/23 TO CAD 1 - BE	
T3153	IO		041		2/23 TO CAD 1 - BE	
T3160	IO		047		2/23 TO CAD 1 - BF	
T3161	IO		048		2/23 TO CAD 1 - BF	
T3162	IO		049		2/23 TO CAD 1 - BF	
T3163	IO		050		2/23 TO CAD 1 - BF	
T3170	IO		051		2/23 TO CAD 1 - BF	
T3171	IO		052		2/23 TO CAD 1 - BF	
T3172	IO		053		2/23 TO CAD 1 - BF	
T3173	IO		054		2/23 TO CAD 1 - BF	

SYMBOL NO. 23

HALF GRID

DESIG	EQPT LOC	CODE	ELEM IDENT	OPT
GDXHG7	13-124	SEE NOTE 309	A	

LEAD DESIG	FUNC	TERM. MOD	TERM.	TERM. OPT	DESTINATION	NOTE
+300V06	IO		006		1/23	
+300V07	IO		106		1/23	
+5V04	IO		001		1/1	
+5V13	IO		101		1/1	
-48V13	PWR		003		2/20	
	PWR		004		2/20	
GRD13124	GRD		000			
	GRD		036			
	GRD		036			
	GRD		037			
	GRD		037			
	GRD		055			
	GRD		056			
	GRD		100			
	GRD		136			
	GRD		136			
	GRD		137			
	GRD		137			
	GRD		140			
	GRD		141			
	GRD		155			
	GRD		156			
	GRD		200			
	GRD		203			
	GRD		204			
	GRD		206			
	GRD		207			
	GRD		208			
	GRD		255			
	GRD		256			
	GRD		300			
	GRD		301			
	GRD		302			
	GRD		303			
	GRD		304			
	GRD		306			
	GRD		307			
	GRD		308			
	GRD		355			
	GRD		356			
RB1	IO		019		1/11	
RB11	IO		220		1/11	
RB13	IO		224		1/11	
RB14	IO		022		1/11	
RB17	IO		034		1/10	
RB18	IO		232		1/10	
RB2	IO		217		1/11	
RB20	IO		242		1/10	
RB23	IO		044		1/10	
RB24	IO		033		1/10	
RB27	IO		235		1/10	
RB29	IO		245		1/10	
RB30	IO		043		1/10	
RB32	IO		017		1/17	
RB35	IO		219		1/14	
RB37	IO		223		1/14	
RB38	IO		021		1/17	
RB4	IO		221		1/11	
RB41	IO		020		1/17	
RB42	IO		218		1/14	

SYMBOL NO. 23 (CONT)

HALF GRID

DESIG	EQPT LOC	CODE	ELEM IDENT	OPT
GDXHG7	13-124	SEE NOTE 309	A	

LEAD DESIG	FUNC	TERM. MOD	TERM.	TERM. OPT	DESTINATION	NOTE
RB44	IO		222		1/14	
RB47	IO		024		1/17	
RB48	IO		032		1/14	
RB51	IO		234		1/17	
RB53	IO		244		1/17	
RB54	IO		042		1/14	
RB57	IO		035		1/14	
RB58	IO		233		1/17	
RB60	IO		243		1/17	
RB63	IO		045		1/14	
RB7	IO		023		1/11	
RB8	IO		018		1/11	
R3100	IO		010		2/21	
R3101	IO		011		2/21	
R3102	IO		213		2/21	
R3103	IO		215		2/21	
R3110	IO		014		2/21	
R3111	IO		016		2/21	
R3112	IO		210		2/21	
R3113	IO		212		2/21	
R3120	IO		013		2/21	
R3121	IO		015		2/21	
R3122	IO		209		2/21	
R3123	IO		211		2/21	
R3130	IO		009		2/21	
R3131	IO		012		2/21	
R3132	IO		214		2/21	
R3133	IO		216		2/21	
R3140	IO		353		2/21	
R3141	IO		351		2/21	
R3142	IO		349		2/21	
R3143	IO		347		2/21	
R3150	IO		152		2/21	
R3151	IO		150		2/21	
R3152	IO		148		2/21	
R3153	IO		146		2/21	
R3160	IO		153		2/21	
R3161	IO		151		2/21	
R3162	IO		149		2/21	
R3163	IO		147		2/21	
R3170	IO		352		2/21	
R3171	IO		350		2/21	
R3172	IO		348		2/21	
R3173	IO		346		2/21	
TB1	IO		119		1/11	
TB11	IO		320		1/11	
TB13	IO		324		1/11	
TB14	IO		122		1/11	
TB17	IO		134		1/10	
TB18	IO		332		1/10	
TB2	IO		317		1/11	
TB20	IO		342		1/10	
TB23	IO		144		1/10	
TB24	IO		133		1/10	
TB27	IO		335		1/10	
TB29	IO		345		1/10	
TB30	IO		143		1/10	
TB32	IO		117		1/17	
TB35	IO		319		1/14	
TB37	IO		323		1/14	

SYMBOL NO. 23 (CONT)

HALF GRID

DESIG	EQPT LOC	CODE	ELEM IDENT	OPT
GDXHG7	13-124	SEE NOTE 309	A	

LEAD DESIG	FUNC	TERM. MOD	TERM.	TERM. OPT	DESTINATION	NOTE
TB38	IO		121		1/17	
TB4	IO		321		1/11	
TB41	IO		120		1/17	
TB42	IO		318		1/14	
TB44	IO		322		1/14	
TB47	IO		124		1/17	
TB48	IO		132		1/14	
TB51	IO		334		1/17	
TB53	IO		344		1/17	
TB54	IO		142		1/14	
TB57	IO		135		1/14	
TB58	IO		333		1/17	
TB60	IO		343		1/17	
TB63	IO		145		1/14	
TB7	IO		123		1/11	
TB8	IO		118		1/11	
T3100	IO		110		2/22	
T3101	IO		111		2/22	
T3102	IO		313		2/22	
T3103	IO		315		2/22	
T3110	IO		114		2/22	
T3111	IO		116		2/22	
T3112	IO		310		2/22	
T3113	IO		312		2/22	
T3120	IO		113		2/22	
T3121	IO		115		2/22	
T3122	IO		309		2/22	
T3123	IO		311		2/22	
T3130	IO		109		2/22	
T3131	IO		112		2/22	
T3132	IO		314		2/22	
T3133	IO		316		2/22	
T3140	IO		253		2/22	
T3141	IO		251		2/22	
T3142	IO		249		2/22	
T3143	IO		247		2/22	
T3150	IO		052		2/22	
T3151	IO		050		2/22	
T3152	IO		048		2/22	
T3153	IO		046		2/22	
T3160	IO		053		2/22	
T3161	IO		051		2/22	
T3162	IO		049		2/22	
T3163	IO		047		2/22	
T3170	IO		252		2/22	
T3171	IO		250		2/22	
T3172	IO		248		2/22	
T3173	IO		246		2/22	
OASHG31	IO		237		1/9	
OCLG3	IO		241		1/9	

PART OF FS 2

SYMBOL(S) 22 23

COPYRIGHT (C) 1987 AT&T
ALL RIGHTS RESERVED

LINE UNIT, MODEL 3

DWG SIZE: C2

ISSUE: 1

AT&T BELL LABORATORIES

SD-5D180-01

B2CM

PART OF FS 2

LU3 UPPER SHELF

SYMBOL NO. 23 (CONT)

HALF GRID

DESIG	EQPT LOC	CODE	ELEM IDENT	OPT
GDXHG7	13-124	SEE NOTE 309	A	

LEAD DESIG	FUNC	TERM. MOD	TERM.	TERM. OPT	DESTINATION	NOTE
0DG3	IO		338		1/9	
0EG31	IO		341		1/9	
0PAG31	IO		236		1/9	
0SLG3	IO		240		1/9	
0256KHZ3	IO		038		1/9	
1ASWG31	IO		337		2/9	
1CLG3	IO		339		2/9	
1DG3	IO		238		2/9	
1EG31	IO		239		2/9	
1PAG31	IO		336		2/9	
1SLG3	IO		340		2/9	
1256KHZ3	IO		138		2/9	

SYMBOL NO. 24

TERMINAL FIELD

DESIG	EQPT LOC	CODE	ELEM IDENT	OPT
TF	13-130	TERMINAL FIELD	A	

LEAD DESIG	FUNC	TERM. MOD	TERM.	TERM. OPT	DESTINATION	NOTE
R5000	IO		002		2/26 TO CAD 1 - BO	
R5001	IO		003		2/26 TO CAD 1 - BO	
R5002	IO		004		2/26 TO CAD 1 - BO	
R5003	IO		005		2/26 TO CAD 1 - BO	
R5010	IO		006		2/26 TO CAD 1 - BO	
R5011	IO		007		2/26 TO CAD 1 - BO	
R5012	IO		008		2/26 TO CAD 1 - BO	
R5013	IO		009		2/26 TO CAD 1 - BO	
R5020	IO		015		2/26 TO CAD 1 - BP	
R5021	IO		016		2/26 TO CAD 1 - BP	
R5022	IO		017		2/26 TO CAD 1 - BP	
R5023	IO		018		2/26 TO CAD 1 - BP	
R5030	IO		019		2/26 TO CAD 1 - BP	
R5031	IO		020		2/26 TO CAD 1 - BP	
R5032	IO		021		2/26 TO CAD 1 - BP	
R5033	IO		022		2/26 TO CAD 1 - BP	
R5040	IO		034		2/26 TO CAD 1 - BO	
R5041	IO		035		2/26 TO CAD 1 - BO	
R5042	IO		036		2/26 TO CAD 1 - BO	
R5043	IO		037		2/26 TO CAD 1 - BO	
R5050	IO		038		2/26	

SYMBOL NO. 24 (CONT)

TERMINAL FIELD

DESIG	EQPT LOC	CODE	ELEM IDENT	OPT
TF	13-130	TERMINAL FIELD	A	

LEAD DESIG	FUNC	TERM. MOD	TERM.	TERM. OPT	DESTINATION	NOTE
					TO CAD 1 - BO	
R5051	IO		039		2/26 TO CAD 1 - BO	
R5052	IO		040		2/26 TO CAD 1 - BO	
R5053	IO		041		2/26 TO CAD 1 - BO	
R5060	IO		047		2/26 TO CAD 1 - BR	
R5061	IO		048		2/26 TO CAD 1 - BR	
R5062	IO		049		2/26 TO CAD 1 - BR	
R5063	IO		050		2/26 TO CAD 1 - BR	
R5070	IO		051		2/26 TO CAD 1 - BR	
R5071	IO		052		2/26 TO CAD 1 - BR	
R5072	IO		053		2/26 TO CAD 1 - BR	
R5073	IO		054		2/26 TO CAD 1 - BR	

SYMBOL NO. 25

TERMINAL FIELD

DESIG	EQPT LOC	CODE	ELEM IDENT	OPT
TF	13-131	TERMINAL FIELD	A	

LEAD DESIG	FUNC	TERM. MOD	TERM.	TERM. OPT	DESTINATION	NOTE
T5000	IO		002		2/26 TO CAD 1 - BO	
T5001	IO		003		2/26 TO CAD 1 - BO	
T5002	IO		004		2/26 TO CAD 1 - BO	
T5003	IO		005		2/26 TO CAD 1 - BO	
T5010	IO		006		2/26 TO CAD 1 - BO	
T5011	IO		007		2/26 TO CAD 1 - BO	
T5012	IO		008		2/26 TO CAD 1 - BO	
T5013	IO		009		2/26 TO CAD 1 - BO	
T5020	IO		015		2/26 TO CAD 1 - BP	
T5021	IO		016		2/26 TO CAD 1 - BP	
T5022	IO		017		2/26 TO CAD 1 - BP	
T5023	IO		018		2/26 TO CAD 1 - BP	
T5030	IO		019		2/26 TO CAD 1 - BP	
T5031	IO		020		2/26 TO CAD 1 - BP	
T5032	IO		021		2/26 TO CAD 1 - BP	

SYMBOL NO. 25 (CONT)

TERMINAL FIELD

DESIG	EQPT LOC	CODE	ELEM IDENT	OPT
TF	13-131	TERMINAL FIELD	A	

LEAD DESIG	FUNC	TERM. MOD	TERM.	TERM. OPT	DESTINATION	NOTE
T5033	IO		022		2/26 TO CAD 1 - BP	
T5040	IO		034		2/26 TO CAD 1 - BO	
T5041	IO		035		2/26 TO CAD 1 - BO	
T5042	IO		036		2/26 TO CAD 1 - BO	
T5043	IO		037		2/26 TO CAD 1 - BO	
T5050	IO		038		2/26 TO CAD 1 - BO	
T5051	IO		039		2/26 TO CAD 1 - BO	
T5052	IO		040		2/26 TO CAD 1 - BO	
T5053	IO		041		2/26 TO CAD 1 - BO	
T5060	IO		047		2/26 TO CAD 1 - BR	
T5061	IO		048		2/26 TO CAD 1 - BR	
T5062	IO		049		2/26 TO CAD 1 - BR	
T5063	IO		050		2/26 TO CAD 1 - BR	
T5070	IO		051		2/26 TO CAD 1 - BR	
T5071	IO		052		2/26 TO CAD 1 - BR	
T5072	IO		053		2/26 TO CAD 1 - BR	
T5073	IO		054		2/26 TO CAD 1 - BR	

SYMBOL NO. 26

HALF GRID

DESIG	EQPT LOC	CODE	ELEM IDENT	OPT
GDXHG10	13-132	SEE NOTE 309	A	

LEAD DESIG	FUNC	TERM. MOD	TERM.	TERM. OPT	DESTINATION	NOTE
	GRD		136			
	GRD		137			
	GRD		137			
	GRD		140			
	GRD		141			
	GRD		155			
	GRD		156			
	GRD		200			
	GRD		203			
	GRD		204			
	GRD		206			
	GRD		207			
	GRD		208			
	GRD		255			
	GRD		256			
	GRD		300			
	GRD		301			
	GRD		302			
	GRD		303			
	GRD		304			
	GRD		306			
	GRD		307			
	GRD		308			
	GRD		355			
	GRD		356			
RB0	IO		017		1/11	
RB1	IO		019		1/11	
RB10	IO		218		1/11	
RB11	IO		220		1/11	
RB14	IO		022		1/11	
RB15	IO		024		1/11	
RB18	IO		232		1/10	
RB19	IO		234		1/10	
RB22	IO		042		1/10	
RB23	IO		044		1/10	
RB24	IO		033		1/10	
RB25	IO		035		1/10	
RB28	IO		243		1/10	
RB29	IO		245		1/10	
RB34	IO		217		1/17	
RB35	IO		219		1/14	
RB38	IO		021		1/17	
RB39	IO		023		1/14	
RB4	IO		221		1/11	
RB40	IO		018		1/14	
RB41	IO		020		1/17	
RB44	IO		222		1/14	
RB45	IO		224		1/17	
RB48	IO		032		1/14	
RB49	IO		034		1/17	

SYMBOL NO. 26

HALF GRID

DESIG	EQPT LOC	CODE	ELEM IDENT	OPT
GDXHG10	13-132	SEE NOTE 309	A	

LEAD DESIG	FUNC	TERM. MOD	TERM.	TERM. OPT	DESTINATION	NOTE
+300V08	IO		006		1/26	
+300V09	IO		106		1/26	
+5V04	IO		001		1/1	
+5V13	IO		101		1/1	
-48V14	PWR		004		2/26	
	PWR		003		2/29,2/53	
GRD13132	GRD		000			
	GRD		036			
	GRD		036			
	GRD		037			
	GRD		037			
	GRD		055			
	GRD		056			
	GRD		100			
	GRD		136			

PART OF FS 2

SYMBOL(S) 23 24 25 26

COPYRIGHT (C) 1987 AT&T
ALL RIGHTS RESERVED

LINE UNIT, MODEL 3

DWG SIZE	ISSUE
C2	1

AT&T BELL LABORATORIES	SD-5D180-01	B2CN

PART OF FS 2

LU3 UPPER SHELF

SYMBOL NO. 26 (CONT)

HALF GRID

DESIG	EQPT LOC	CODE	ELEM IDENT	OPT
GDXHG10	13-132	SEE NOTE 309	A	

LEAD DESIG	FUNC	TERM. MOD	TERM.	TERM. OPT	DESTINATION	NOTE
R85	IO		223		1/11	
R852	IO		242		1/14	
R853	IO		244		1/17	
R858	IO		233		1/17	
R859	IO		235		1/14	
R862	IO		043		1/17	
R863	IO		045		1/14	
R5000	IO		010		2/24	
R5001	IO		011		2/24	
R5002	IO		213		2/24	
R5003	IO		215		2/24	
R5010	IO		014		2/24	
R5011	IO		016		2/24	
R5012	IO		210		2/24	
R5013	IO		212		2/24	
R5020	IO		013		2/24	
R5021	IO		015		2/24	
R5022	IO		209		2/24	
R5023	IO		211		2/24	
R5030	IO		009		2/24	
R5031	IO		012		2/24	
R5032	IO		214		2/24	
R5033	IO		216		2/24	
R5040	IO		353		2/24	
R5041	IO		351		2/24	
R5042	IO		349		2/24	
R5043	IO		347		2/24	
R5050	IO		152		2/24	
R5051	IO		150		2/24	
R5052	IO		148		2/24	
R5053	IO		146		2/24	
R5060	IO		153		2/24	
R5061	IO		151		2/24	
R5062	IO		149		2/24	
R5063	IO		147		2/24	
R5070	IO		352		2/24	
R5071	IO		350		2/24	
R5072	IO		348		2/24	
R5073	IO		346		2/24	
TB0	IO		117		1/11	
TB1	IO		119		1/11	
TB10	IO		318		1/11	
TB11	IO		320		1/11	
TB14	IO		122		1/11	
TB15	IO		124		1/11	
TB18	IO		332		1/10	
TB19	IO		334		1/10	
TB22	IO		142		1/10	
TB23	IO		144		1/10	
TB24	IO		133		1/10	
TB25	IO		135		1/10	
TB28	IO		343		1/10	
TB29	IO		345		1/10	
TB34	IO		317		1/17	
TB35	IO		319		1/14	
TB38	IO		121		1/17	
TB39	IO		123		1/14	
TB4	IO		321		1/11	

SYMBOL NO. 26 (CONT)

HALF GRID

DESIG	EQPT LOC	CODE	ELEM IDENT	OPT
GDXHG10	13-132	SEE NOTE 309	A	

LEAD DESIG	FUNC	TERM. MOD	TERM.	TERM. OPT	DESTINATION	NOTE
TB40	IO		118		1/14	
TB41	IO		120		1/17	
TB44	IO		322		1/14	
TB45	IO		324		1/17	
TB48	IO		132		1/14	
TB49	IO		134		1/17	
TB5	IO		323		1/11	
TB52	IO		342		1/14	
TB53	IO		344		1/17	
TB58	IO		333		1/17	
TB59	IO		335		1/14	
TB62	IO		143		1/17	
TB63	IO		145		1/14	
T5000	IO		110		2/25	
T5001	IO		111		2/25	
T5002	IO		313		2/25	
T5003	IO		315		2/25	
T5010	IO		114		2/25	
T5011	IO		116		2/25	
T5012	IO		310		2/25	
T5013	IO		312		2/25	
T5020	IO		113		2/25	
T5021	IO		115		2/25	
T5022	IO		309		2/25	
T5023	IO		311		2/25	
T5030	IO		109		2/25	
T5031	IO		112		2/25	
T5032	IO		314		2/25	
T5033	IO		316		2/25	
T5040	IO		253		2/25	
T5041	IO		251		2/25	
T5042	IO		249		2/25	
T5043	IO		247		2/25	
T5050	IO		052		2/25	
T5051	IO		050		2/25	
T5052	IO		048		2/25	
T5053	IO		046		2/25	
T5060	IO		053		2/25	
T5061	IO		051		2/25	
T5062	IO		049		2/25	
T5063	IO		047		2/25	
T5070	IO		252		2/25	
T5071	IO		250		2/25	
T5072	IO		248		2/25	
T5073	IO		246		2/25	
0ASHG50	IO		237		1/9	
0CLG5	IO		241		1/9	
0DG5	IO		338		1/9	
0EG50	IO		341		1/9	
0PAG50	IO		236		1/9	
0SLG5	IO		240		1/9	
0256KHZ5	IO		038		1/9	
1ASHG50	IO		337		2/9	
1CLG5	IO		339		2/9	
1DG5	IO		238		2/9	
1EG50	IO		239		2/9	
1PAG50	IO		336		2/9	
1SLG5	IO		340		2/9	
1256KHZ5	IO		138		2/9	

SYMBOL NO. 27

TERMINAL FIELD

DESIG	EQPT LOC	CODE	ELEM IDENT	OPT
TF	13-138	TERMINAL FIELD	A	

LEAD DESIG	FUNC	TERM. MOD	TERM.	TERM. OPT	DESTINATION	NOTE
R5100	IO		002		2/29 TO CAD 1 - BS	
R5101	IO		003		2/29 TO CAD 1 - BS	
R5102	IO		004		2/29 TO CAD 1 - BS	
R5103	IO		005		2/29 TO CAD 1 - BS	
R5110	IO		006		2/29 TO CAD 1 - BS	
R5111	IO		007		2/29 TO CAD 1 - BS	
R5112	IO		008		2/29 TO CAD 1 - BS	
R5113	IO		009		2/29 TO CAD 1 - BS	
R5120	IO		015		2/29 TO CAD 1 - BT	
R5121	IO		016		2/29 TO CAD 1 - BT	
R5122	IO		017		2/29 TO CAD 1 - BT	
R5123	IO		018		2/29 TO CAD 1 - BT	
R5130	IO		019		2/29 TO CAD 1 - BT	
R5131	IO		020		2/29 TO CAD 1 - BT	
R5132	IO		021		2/29 TO CAD 1 - BT	
R5133	IO		022		2/29 TO CAD 1 - BT	
R5140	IO		034		2/29 TO CAD 1 - BU	
R5141	IO		035		2/29 TO CAD 1 - BU	
R5142	IO		036		2/29 TO CAD 1 - BU	
R5143	IO		037		2/29 TO CAD 1 - BU	
R5150	IO		038		2/29 TO CAD 1 - BU	
R5151	IO		039		2/29 TO CAD 1 - BU	
R5152	IO		040		2/29 TO CAD 1 - BU	
R5153	IO		041		2/29 TO CAD 1 - BU	
R5160	IO		047		2/29 TO CAD 1 - BV	
R5161	IO		048		2/29 TO CAD 1 - BV	
R5162	IO		049		2/29 TO CAD 1 - BV	
R5163	IO		050		2/29 TO CAD 1 - BV	
R5170	IO		051		2/29 TO CAD 1 - BV	
R5171	IO		052		2/29 TO CAD 1 - BV	
R5172	IO		053		2/29 TO CAD 1 - BV	
R5173	IO		054		2/29 TO CAD 1 - BV	

PART OF FS 2

SYMBOL(S) 26 27

COPYRIGHT (c) 1987 AT&T
ALL RIGHTS RESERVED

LINE UNIT, MODEL 3

DWG SIZE C2 | ISSUE 1

AT&T BELL LABORATORIES | SD-5D180-01 | B2CP

PART OF FS 2

LU3 UPPER SHELF

SYMBOL NO. 28

TERMINAL FIELD

DESIG	EQPT LOC	CODE	ELEM IDENT	OPT
TF	13-139	TERMINAL FIELD	A	

LEAD DESIG	FUNC	TERM. MOD	TERM.	TERM. OPT	DESTINATION	NOTE
T5100	IO		002		2/29 TO CAD 1 - BS	
T5101	IO		003		2/29 TO CAD 1 - BS	
T5102	IO		004		2/29 TO CAD 1 - BS	
T5103	IO		005		2/29 TO CAD 1 - BS	
T5110	IO		006		2/29 TO CAD 1 - BS	
T5111	IO		007		2/29 TO CAD 1 - BS	
T5112	IO		008		2/29 TO CAD 1 - BS	
T5113	IO		009		2/29 TO CAD 1 - BS	
T5120	IO		015		2/29 TO CAD 1 - BT	
T5121	IO		016		2/29 TO CAD 1 - BT	
T5122	IO		017		2/29 TO CAD 1 - BT	
T5123	IO		018		2/29 TO CAD 1 - BT	
T5130	IO		019		2/29 TO CAD 1 - BT	
T5131	IO		020		2/29 TO CAD 1 - BT	
T5132	IO		021		2/29 TO CAD 1 - BT	
T5133	IO		022		2/29 TO CAD 1 - BT	
T5140	IO		034		2/29 TO CAD 1 - BU	
T5141	IO		035		2/29 TO CAD 1 - BU	
T5142	IO		036		2/29 TO CAD 1 - BU	
T5143	IO		037		2/29 TO CAD 1 - BU	
T5150	IO		038		2/29 TO CAD 1 - BU	
T5151	IO		039		2/29 TO CAD 1 - BU	
T5152	IO		040		2/29 TO CAD 1 - BU	
T5153	IO		041		2/29 TO CAD 1 - BU	
T5160	IO		047		2/29 TO CAD 1 - BV	
T5161	IO		048		2/29 TO CAD 1 - BV	
T5162	IO		049		2/29 TO CAD 1 - BV	
T5163	IO		050		2/29 TO CAD 1 - BV	
T5170	IO		051		2/29 TO CAD 1 - BV	
T5171	IO		052		2/29 TO CAD 1 - BV	
T5172	IO		053		2/29 TO CAD 1 - BV	
T5173	IO		054		2/29 TO CAD 1 - BV	

SYMBOL NO. 29

HALF GRID

DESIG	EQPT LOC	CODE	ELEM IDENT	OPT
GDXHG11	13-140	SEE NOTE 309	A	

LEAD DESIG	FUNC	TERM. MOD	TERM.	TERM. OPT	DESTINATION	NOTE
+300V10	IO		006		1/29	
+300V11	IO		106		1/29	
+5V04	IO		001		1/1	
+5V13	IO		101		1/1	
-48V14	PWR		003		2/26	
	PWR		004		2/26	
GRD13140	GRD		000			
	GRD		036			
	GRD		036			
	GRD		037			
	GRD		037			
	GRD		055			
	GRD		056			
	GRD		100			
	GRD		136			
	GRD		136			
	GRD		137			
	GRD		137			
	GRD		140			
	GRD		141			
	GRD		155			
	GRD		156			
	GRD		200			
	GRD		203			
	GRD		204			
	GRD		206			
	GRD		207			
	GRD		208			
	GRD		255			
	GRD		256			
	GRD		300			
	GRD		301			
	GRD		302			
	GRD		303			
	GRD		304			
	GRD		306			
	GRD		307			
	GRD		308			
	GRD		355			
	GRD		356			
RB12	IO		222		1/11	
RB13	IO		224		1/11	
RB16	IO		032		1/10	
RB17	IO		034		1/10	
RB2	IO		217		1/11	
RB20	IO		242		1/10	
RB21	IO		244		1/10	
RB26	IO		233		1/10	
RB27	IO		235		1/10	
RB3	IO		219		1/11	
RB30	IO		043		1/10	
RB31	IO		045		1/10	
RB32	IO		017		1/17	
RB33	IO		019		1/14	
RB36	IO		221		1/17	
RB37	IO		223		1/14	
RB42	IO		218		1/14	
RB43	IO		220		1/17	
RB46	IO		022		1/14	
RB47	IO		024		1/17	

SYMBOL NO. 29 (CONT)

HALF GRID

DESIG	EQPT LOC	CODE	ELEM IDENT	OPT
GDXHG11	13-140	SEE NOTE 309	A	

LEAD DESIG	FUNC	TERM. MOD	TERM.	TERM. OPT	DESTINATION	NOTE
RB50	IO		232		1/14	
RB51	IO		234		1/17	
RB54	IO		042		1/14	
RB55	IO		044		1/17	
RB56	IO		033		1/17	
RB57	IO		035		1/14	
RB6	IO		021		1/11	
RB60	IO		243		1/17	
RB61	IO		245		1/14	
RB7	IO		023		1/11	
RB8	IO		018		1/11	
RB9	IO		020		1/11	
R5100	IO		010		2/27	
R5101	IO		011		2/27	
R5102	IO		213		2/27	
R5103	IO		215		2/27	
R5110	IO		014		2/27	
R5111	IO		016		2/27	
R5112	IO		210		2/27	
R5113	IO		212		2/27	
R5120	IO		013		2/27	
R5121	IO		015		2/27	
R5122	IO		209		2/27	
R5123	IO		211		2/27	
R5130	IO		009		2/27	
R5131	IO		012		2/27	
R5132	IO		214		2/27	
R5133	IO		216		2/27	
R5140	IO		353		2/27	
R5141	IO		351		2/27	
R5142	IO		349		2/27	
R5143	IO		347		2/27	
R5150	IO		152		2/27	
R5151	IO		150		2/27	
R5152	IO		148		2/27	
R5153	IO		146		2/27	
R5160	IO		153		2/27	
R5161	IO		151		2/27	
R5162	IO		149		2/27	
R5163	IO		147		2/27	
R5170	IO		352		2/27	
R5171	IO		350		2/27	
R5172	IO		348		2/27	
R5173	IO		346		2/27	
TB12	IO		322		1/11	
TB13	IO		324		1/11	
TB16	IO		132		1/10	
TB17	IO		134		1/10	
TB2	IO		317		1/11	
TB20	IO		342		1/10	
TB21	IO		344		1/10	
TB26	IO		333		1/10	
TB27	IO		335		1/10	
TB3	IO		319		1/11	
TB30	IO		143		1/10	
TB31	IO		145		1/10	
TB32	IO		117		1/17	
TB33	IO		119		1/14	
TB36	IO		321		1/17	
TB37	IO		323		1/14	

SYMBOL NO. 29 (CONT)

HALF GRID

DESIG	EQPT LOC	CODE	ELEM IDENT	OPT
GDXHG11	13-140	SEE NOTE 309	A	

LEAD DESIG	FUNC	TERM. MOD	TERM.	TERM. OPT	DESTINATION	NOTE
TB42	IO		318		1/14	
TB43	IO		320		1/17	
TB46	IO		122		1/14	
TB47	IO		124		1/17	
TB50	IO		332		1/14	
TB51	IO		334		1/17	
TB54	IO		142		1/14	
TB55	IO		144		1/17	
TB56	IO		133		1/17	
TB57	IO		135		1/14	
TB6	IO		121		1/11	
TB60	IO		343		1/17	
TB61	IO		345		1/14	
TB7	IO		123		1/11	
TB8	IO		118		1/11	
TB9	IO		120		1/11	
T5100	IO		110		2/28	
T5101	IO		111		2/28	
T5102	IO		313		2/28	
T5103	IO		315		2/28	
T5110	IO		114		2/28	
T5111	IO		116		2/28	
T5112	IO		310		2/28	
T5113	IO		312		2/28	
T5120	IO		113		2/28	
T5121	IO		115		2/28	
T5122	IO		309		2/28	
T5123	IO		311		2/28	
T5130	IO		109		2/28	
T5131	IO		112		2/28	
T5132	IO		314		2/28	
T5133	IO		316		2/28	
T5140	IO		253		2/28	
T5141	IO		251		2/28	
T5142	IO		249		2/28	
T5143	IO		247		2/28	
T5150	IO		052		2/28	
T5151	IO		050		2/28	
T5152	IO		048		2/28	
T5153	IO		046		2/28	
T5160	IO		053		2/28	
T5161	IO		051		2/28	
T5162	IO		049		2/28	
T5163	IO		047		2/28	
T5170	IO		252		2/28	
T5171	IO		250		2/28	
T5172	IO		248		2/28	
T5173	IO		246		2/28	
OASHG51	IO		237		1/9	
OCLGS	IO		241		1/9	

PART OF FS 2

SYMBOL(S) 28 29

COPYRIGHT (c) 1987 AT&T
ALL RIGHTS RESERVED

LINE UNIT, MODEL 3

CWG SIZE	ISSUE
C2	1

AT&T BELL LABORATORIES	SD-5D180-01	B2CR

PART OF FS 2

LU3 UPPER SHELF

SYMBOL NO. 29 (CONT)

HALF GRID

DESIG	EQPT LOC	CODE	ELEM IDENT	OPT
GDXHG11	13-140	SEE NOTE 309	A	

LEAD DESIG	FUNC	TERM. MOD	TERM.	TERM. OPT	DESTINATION	NOTE
0DG5	IO		338		1/9	
0EG51	IO		341		1/9	
0PAG51	IO		236		1/9	
0SLG5	IO		240		1/9	
0Z56KHZ5	IO		038		1/9	
1ASHG51	IO		337		2/9	
1CLG5	IO		339		2/9	
1DG5	IO		238		2/9	
1EG51	IO		239		2/9	
1PAG51	IO		336		2/9	
1SLG5	IO		340		2/9	
1Z56KHZ5	IO		138		2/9	

SYMBOL NO. 30

TERMINAL FIELD

DESIG	EQPT LOC	CODE	ELEM IDENT	OPT
TF	13-146	TERMINAL FIELD	A	

LEAD DESIG	FUNC	TERM. MOD	TERM.	TERM. OPT	DESTINATION	NOTE
R7000	IO		002		2/32 TO CAD 1 - CE	
R7001	IO		003		2/32 TO CAD 1 - CE	
R7002	IO		004		2/32 TO CAD 1 - CE	
R7003	IO		005		2/32 TO CAD 1 - CE	
R7010	IO		006		2/32 TO CAD 1 - CE	
R7011	IO		007		2/32 TO CAD 1 - CE	
R7012	IO		008		2/32 TO CAD 1 - CE	
R7013	IO		009		2/32 TO CAD 1 - CE	
R7020	IO		015		2/32 TO CAD 1 - CF	
R7021	IO		016		2/32 TO CAD 1 - CF	
R7022	IO		017		2/32 TO CAD 1 - CF	
R7023	IO		018		2/32 TO CAD 1 - CF	
R7030	IO		019		2/32 TO CAD 1 - CF	
R7031	IO		020		2/32 TO CAD 1 - CF	
R7032	IO		021		2/32 TO CAD 1 - CF	
R7033	IO		022		2/32 TO CAD 1 - CF	
R7040	IO		034		2/32 TO CAD 1 - CG	
R7041	IO		035		2/32 TO CAD 1 - CG	
R7042	IO		036		2/32 TO CAD 1 - CG	
R7043	IO		037		2/32 TO CAD 1 - CG	
R7050	IO		038		2/32	

SYMBOL NO. 30 (CONT)

TERMINAL FIELD

DESIG	EQPT LOC	CODE	ELEM IDENT	OPT
TF	13-146	TERMINAL FIELD	A	

LEAD DESIG	FUNC	TERM. MOD	TERM.	TERM. OPT	DESTINATION	NOTE
					TO CAD 1 - CG	
R7051	IO		039		2/32 TO CAD 1 - CG	
R7052	IO		040		2/32 TO CAD 1 - CG	
R7053	IO		041		2/32 TO CAD 1 - CG	
R7060	IO		047		2/32 TO CAD 1 - CH	
R7061	IO		048		2/32 TO CAD 1 - CH	
R7062	IO		049		2/32 TO CAD 1 - CH	
R7063	IO		050		2/32 TO CAD 1 - CH	
R7070	IO		051		2/32 TO CAD 1 - CH	
R7071	IO		052		2/32 TO CAD 1 - CH	
R7072	IO		053		2/32 TO CAD 1 - CH	
R7073	IO		054		2/32 TO CAD 1 - CH	

SYMBOL NO. 31

TERMINAL FIELD

DESIG	EQPT LOC	CODE	ELEM IDENT	OPT
TF	13-147	TERMINAL FIELD	A	

LEAD DESIG	FUNC	TERM. MOD	TERM.	TERM. OPT	DESTINATION	NOTE
T7000	IO		002		2/32 TO CAD 1 - CE	
T7001	IO		003		2/32 TO CAD 1 - CE	
T7002	IO		004		2/32 TO CAD 1 - CE	
T7003	IO		005		2/32 TO CAD 1 - CE	
T7010	IO		006		2/32 TO CAD 1 - CE	
T7011	IO		007		2/32 TO CAD 1 - CE	
T7012	IO		008		2/32 TO CAD 1 - CE	
T7013	IO		009		2/32 TO CAD 1 - CE	
T7020	IO		015		2/32 TO CAD 1 - CF	
T7021	IO		016		2/32 TO CAD 1 - CF	
T7022	IO		017		2/32 TO CAD 1 - CF	
T7023	IO		018		2/32 TO CAD 1 - CF	
T7030	IO		019		2/32 TO CAD 1 - CF	
T7031	IO		020		2/32 TO CAD 1 - CF	
T7032	IO		021		2/32 TO CAD 1 - CF	

SYMBOL NO. 31 (CONT)

TERMINAL FIELD

DESIG	EQPT LOC	CODE	ELEM IDENT	OPT
TF	13-147	TERMINAL FIELD	A	

LEAD DESIG	FUNC	TERM. MOD	TERM.	TERM. OPT	DESTINATION	NOTE
T7033	IO		022		2/32 TO CAD 1 - CF	
T7040	IO		034		2/32 TO CAD 1 - CG	
T7041	IO		035		2/32 TO CAD 1 - CG	
T7042	IO		036		2/32 TO CAD 1 - CG	
T7043	IO		037		2/32 TO CAD 1 - CG	
T7050	IO		038		2/32 TO CAD 1 - CG	
T7051	IO		039		2/32 TO CAD 1 - CG	
T7052	IO		040		2/32 TO CAD 1 - CG	
T7053	IO		041		2/32 TO CAD 1 - CG	
T7060	IO		047		2/32 TO CAD 1 - CH	
T7061	IO		048		2/32 TO CAD 1 - CH	
T7062	IO		049		2/32 TO CAD 1 - CH	
T7063	IO		050		2/32 TO CAD 1 - CH	
T7070	IO		051		2/32 TO CAD 1 - CH	
T7071	IO		052		2/32 TO CAD 1 - CH	
T7072	IO		053		2/32 TO CAD 1 - CH	
T7073	IO		054		2/32 TO CAD 1 - CH	

SYMBOL NO. 32

HALF GRID

DESIG	EQPT LOC	CODE	ELEM IDENT	OPT
GDXHG14	13-148	SEE NOTE 309	A	

LEAD DESIG	FUNC	TERM. MOD	TERM.	TERM. OPT	DESTINATION	NOTE
+300V12	IO		006		1/32	
+300V13	IO		106		1/32	
+5V04	IO		001		1/1	
+5V13	IO		101		1/1	
-48V15	PWR		003		2/32	
	PWR		004		2/35,2/55	
GRD13148	GRD		000			
	GRD		036			
	GRD		036			
	GRD		037			
	GRD		037			
	GRD		055			
	GRD		056			
	GRD		100			
	GRD		136			

SYMBOL NO. 32 (CONT)

HALF GRID

DESIG	EQPT LOC	CODE	ELEM IDENT	OPT
GDXHG14	13-148	SEE NOTE 309	A	

LEAD DESIG	FUNC	TERM. MOD	TERM.	TERM. OPT	DESTINATION	NOTE
	GRD		136			
	GRD		137			
	GRD		137			
	GRD		140			
	GRD		141			
	GRD		155			
	GRD		156			
	GRD		200			
	GRD		203			
	GRD		204			
	GRD		206			
	GRD		207			
	GRD		208			
	GRD		255			
	GRD		256			
	GRD		300			
	GRD		301			
	GRD		302			
	GRD		303			
	GRD		304			
	GRD		306			
	GRD		307			
	GRD		308			
	GRD		355			
	GRD		356			
RB0	IO		017			1/11
RB11	IO		220			1/11
RB13	IO		224			1/11
RB14	IO		022			1/11
RB17	IO		034			1/10
RB18	IO		232			1/10
RB20	IO		242			1/10
RB23	IO		044			1/10
RB25	IO		035			1/10
RB26	IO		233			1/10
RB28	IO		243			1/10
RB3	IO		219			1/11
RB31	IO		045			1/10
RB33	IO		019			1/14
RB34	IO		217			1/17
RB36	IO		221			1/17
RB39	IO		023			1/14
RB41	IO		020			1/17
RB42	IO		218			1/14
RB44	IO		222			1/14
RB47	IO		024			1,17
RB48	IO		032			1/14
RB5	IO		223			1/11
RB51	IO		234			1/17
RB53	IO		244			1/17

PART OF FS 2

SYMBOL(S) 29 30 31 32

COPYRIGHT (C) 1987 AT&T
ALL RIGHTS RESERVED

LINE UNIT, MODEL 3

DWG SIZE	ISSUE
D2	2M

AT&T BELL LABORATORIES	SD-5D180-01	B2CT

PART OF FS 2

LU3 UPPER SHELF

SYMBOL NO. 32 (CONT)

HALF GRID

DESIG	EQPT LOC	CODE	ELEM IDENT	OPT
GDXHG14	13-148	SEE NOTE 309	A	

LEAD DESIG	FUNC	TERM. MOD	TERM.	TERM. OPT	DESTINATION	NOTE
RB54	IO		042		1/14	
RB56	IO		033		1/17	
RB59	IO		235		1/14	
RB6	IO		021		1/11	
RB61	IO		245		1/14	
RB62	IO		043		1/17	
RB8	IO		018		1/11	
R7000	IO		010		2/30	
R7001	IO		011		2/30	
R7002	IO		213		2/30	
R7003	IO		215		2/30	
R7010	IO		014		2/30	
R7011	IO		016		2/30	
R7012	IO		210		2/30	
R7013	IO		212		2/30	
R7020	IO		013		2/30	
R7021	IO		015		2/30	
R7022	IO		209		2/30	
R7023	IO		211		2/30	
R7030	IO		009		2/30	
R7031	IO		012		2/30	
R7032	IO		214		2/30	
R7033	IO		216		2/30	
R7040	IO		353		2/30	
R7041	IO		351		2/30	
R7042	IO		349		2/30	
R7043	IO		347		2/30	
R7050	IO		152		2/30	
R7051	IO		150		2/30	
R7052	IO		148		2/30	
R7053	IO		146		2/30	
R7060	IO		153		2/30	
R7061	IO		151		2/30	
R7062	IO		149		2/30	
R7063	IO		147		2/30	
R7070	IO		352		2/30	
R7071	IO		350		2/30	
R7072	IO		348		2/30	
R7073	IO		346		2/30	
TB0	IO		117		1/11	
TB11	IO		320		1/11	
TB13	IO		324		1/11	
TB14	IO		122		1/11	
TB17	IO		134		1/10	
TB18	IO		332		1/10	
TB20	IO		342		1/10	
TB23	IO		144		1/10	
TB25	IO		135		1/10	
TB26	IO		333		1/10	
TB28	IO		343		1/10	
TB3	IO		319		1/11	
TB31	IO		145		1/10	
TB33	IO		119		1/14	
TB34	IO		317		1/17	
TB36	IO		321		1/17	
TB39	IO		123		1/14	
TB41	IO		120		1/17	
TB42	IO		318		1/14	

SYMBOL NO. 32 (CONT)

HALF GRID

DESIG	EQPT LOC	CODE	ELEM IDENT	OPT
GDXHG14	13-148	SEE NOTE 309	A	

LEAD DESIG	FUNC	TERM. MOD	TERM.	TERM. OPT	DESTINATION	NOTE
TB44	IO		322		1/14	
TB47	IO		124		1/17	
TB48	IO		132		1/14	
TB5	IO		323		1/11	
TB51	IO		334		1/17	
TB53	IO		344		1/17	
TB54	IO		142		1/14	
TB56	IO		133		1/17	
TB59	IO		335		1/14	
TB6	IO		121		1/11	
TB61	IO		345		1/14	
TB62	IO		143		1/17	
TB8	IO		118		1/11	
T7000	IO		110		2/31	
T7001	IO		111		2/31	
T7002	IO		313		2/31	
T7003	IO		315		2/31	
T7010	IO		114		2/31	
T7011	IO		116		2/31	
T7012	IO		310		2/31	
T7013	IO		312		2/31	
T7020	IO		113		2/31	
T7021	IO		115		2/31	
T7022	IO		309		2/31	
T7023	IO		311		2/31	
T7030	IO		109		2/31	
T7031	IO		112		2/31	
T7032	IO		314		2/31	
T7033	IO		316		2/31	
T7040	IO		253		2/31	
T7041	IO		251		2/31	
T7042	IO		249		2/31	
T7043	IO		247		2/31	
T7050	IO		052		2/31	
T7051	IO		050		2/31	
T7052	IO		048		2/31	
T7053	IO		046		2/31	
T7060	IO		053		2/31	
T7061	IO		051		2/31	
T7062	IO		049		2/31	
T7063	IO		047		2/31	
T7070	IO		252		2/31	
T7071	IO		250		2/31	
T7072	IO		248		2/31	
T7073	IO		246		2/31	
0ASWG70	IO		237		1/9	
0CLG7	IO		241		1/9	
0DG7	IO		338		1/9	
0EG70	IO		341		1/9	
0PAG70	IO		236		1/9	
0SLG7	IO		240		1/9	
0256KHZ7	IO		038		1/9	
1ASWG70	IO		337		2/9	
1CLG7	IO		339		2/9	
1DG7	IO		238		2/9	
1EG70	IO		239		2/9	
1PAG70	IO		336		2/9	
1SLG7	IO		340		2/9	
1256KHZ7	IO		138		2/9	

SYMBOL NO. 33

TERMINAL FIELD

DESIG	EQPT LOC	CODE	ELEM IDENT	OPT
TF	13-154	TERMINAL FIELD	A	

LEAD DESIG	FUNC	TERM. MOD	TERM.	TERM. OPT	DESTINATION	NOTE
R7100	IO		002		2/35 TO CAD 1 - C1	
R7101	IO		003		2/35 TO CAD 1 - C1	
R7102	IO		004		2/35 TO CAD 1 - C1	
R7103	IO		005		2/35 TO CAD 1 - C1	
R7110	IO		006		2/35 TO CAD 1 - C1	
R7111	IO		007		2/35 TO CAD 1 - C1	
R7112	IO		008		2/35 TO CAD 1 - C1	
R7113	IO		009		2/35 TO CAD 1 - C1	
R7120	IO		015		2/35 TO CAD 1 - CJ	
R7121	IO		016		2/35 TO CAD 1 - CJ	
R7122	IO		017		2/35 TO CAD 1 - CJ	
R7123	IO		018		2/35 TO CAD 1 - CJ	
R7130	IO		019		2/35 TO CAD 1 - CJ	
R7131	IO		020		2/35 TO CAD 1 - CJ	
R7132	IO		021		2/35 TO CAD 1 - CJ	
R7133	IO		022		2/35 TO CAD 1 - CJ	
R7140	IO		034		2/35 TO CAD 1 - CK	
R7141	IO		035		2/35 TO CAD 1 - CK	
R7142	IO		036		2/35 TO CAD 1 - CK	
R7143	IO		037		2/35 TO CAD 1 - CK	
R7150	IO		038		2/35 TO CAD 1 - CK	
R7151	IO		039		2/35 TO CAD 1 - CK	
R7152	IO		040		2/35 TO CAD 1 - CK	
R7153	IO		041		2/35 TO CAD 1 - CK	
R7160	IO		047		2/35 TO CAD 1 - CL	
R7161	IO		048		2/35 TO CAD 1 - CL	
R7162	IO		049		2/35 TO CAD 1 - CL	
R7163	IO		050		2/35 TO CAD 1 - CL	
R7170	IO		051		2/35 TO CAD 1 - CL	
R7171	IO		052		2/35 TO CAD 1 - CL	
R7172	IO		053		2/35 TO CAD 1 - CL	
R7173	IO		054		2/35 TO CAD 1 - CL	

PART OF FS 2

SYMBOL(S) 32 33

COPYRIGHT (C) 1987 AT&T
ALL RIGHTS RESERVED

LINE UNIT, MODEL 3

DWG SIZE: C2

ISSUE: 2M

AT&T BELL LABORATORIES

SD-5D180-01

B2CU

PART OF FS 2

LU3 UPPER SHELF

SYMBOL NO. 34

TERMINAL FIELD

DESIG	EQPT LOC	CODE	ELEM IDENT	OPT
TF	13-155	TERMINAL FIELD	A	

LEAD DESIG	FUNC	TERM. MOD	TERM.	TERM. OPT	DESTINATION	NOTE
T7100	IO		002		2/35 TO CAD 1 - CI	
T7101	IO		003		2/35 TO CAD 1 - CI	
T7102	IO		004		2/35 TO CAD 1 - CI	
T7103	IO		005		2/35 TO CAD 1 - CI	
T7110	IO		006		2/35 TO CAD 1 - CI	
T7111	IO		007		2/35 TO CAD 1 - CI	
T7112	IO		008		2/35 TO CAD 1 - CI	
T7113	IO		009		2/35 TO CAD 1 - CI	
T7120	IO		015		2/35 TO CAD 1 - CJ	
T7121	IO		016		2/35 TO CAD 1 - CJ	
T7122	IO		017		2/35 TO CAD 1 - CJ	
T7123	IO		018		2/35 TO CAD 1 - CJ	
T7130	IO		019		2/35 TO CAD 1 - CJ	
T7131	IO		020		2/35 TO CAD 1 - CJ	
T7132	IO		021		2/35 TO CAD 1 - CJ	
T7133	IO		022		2/35 TO CAD 1 - CJ	
T7140	IO		034		2/35 TO CAD 1 - CK	
T7141	IO		035		2/35 TO CAD 1 - CK	
T7142	IO		036		2/35 TO CAD 1 - CK	
T7143	IO		037		2/35 TO CAD 1 - CK	
T7150	IO		038		2/35 TO CAD 1 - CK	
T7151	IO		039		2/35 TO CAD 1 - CK	
T7152	IO		040		2/35 TO CAD 1 - CK	
T7153	IO		041		2/35 TO CAD 1 - CK	
T7160	IO		047		2/35 TO CAD 1 - CL	
T7161	IO		048		2/35 TO CAD 1 - CL	
T7162	IO		049		2/35 TO CAD 1 - CL	
T7163	IO		050		2/35 TO CAD 1 - CL	
T7170	IO		051		2/35 TO CAD 1 - CL	
T7171	IO		052		2/35 TO CAD 1 - CL	
T7172	IO		053		2/35 TO CAD 1 - CL	
T7173	IO		054		2/35 TO CAD 1 - CL	

SYMBOL NO. 35

HALF GRID

DESIG	EQPT LOC	CODE	ELEM IDENT	OPT
GDXHG15	13-156	SEE NOTE 309	A	

LEAD DESIG	FUNC	TERM. MOD	TERM.	TERM. OPT	DESTINATION	NOTE
+300V14	IO		006		1/35	
+300V15	IO		106		1/35	
+5V04	IO		001		1/1	
+5V13	IO		101		1/1	
-48V15	PWR		003		2/32	
	PWR		004		2/32	
GRD13156	GRD		000			
	GRD		036			
	GRD		136			
	GRD		037			
	GRD		137			
	GRD		055			
	GRD		056			
	GRD		100			
	GRD		136			
	GRD		136			
	GRD		137			
	GRD		137			
	GRD		140			
	GRD		141			
	GRD		155			
	GRD		156			
	GRD		200			
	GRD		203			
	GRD		204			
	GRD		206			
	GRD		207			
	GRD		208			
	GRD		255			
	GRD		256			
	GRD		300			
	GRD		301			
	GRD		302			
	GRD		303			
	GRD		304			
	GRD		306			
	GRD		307			
	GRD		308			
	GRD		355			
	GRD		356			
R81	IO		019		1/11	
R810	IO		218		1/11	
R812	IO		222		1/11	
R815	IO		024		1/11	
R816	IO		032		1/10	
R819	IO		234		1/10	
R82	IO		217		1/11	
R821	IO		244		1/10	
R822	IO		042		1/10	
R824	IO		033		1/10	
R827	IO		235		1/10	
R829	IO		245		1/10	
R830	IO		043		1/10	
R832	IO		017		1/17	
R835	IO		219		1/14	
R837	IO		223		1/14	
R838	IO		021		1/17	
R84	IO		221		1/11	
R840	IO		018		1/14	
R843	IO		220		1/17	

SYMBOL NO. 35 (CONT)

HALF GRID

DESIG	EQPT LOC	CODE	ELEM IDENT	OPT
GDXHG15	13-156	SEE NOTE 309	A	

LEAD DESIG	FUNC	TERM. MOD	TERM.	TERM. OPT	DESTINATION	NOTE
RB45	IO		224		1/17	
RB46	IO		022		1/14	
RB49	IO		034		1/17	
RB50	IO		232		1/14	
RB52	IO		242		1/14	
RB55	IO		044		1/17	
RB57	IO		035		1/14	
RB58	IO		233		1/17	
RB60	IO		243		1/17	
RB63	IO		045		1/14	
RB7	IO		023		1/11	
RB9	IO		020		1/11	
R7100	IO		010		2/33	
R7101	IO		011		2/33	
R7102	IO		213		2/33	
R7103	IO		215		2/33	
R7110	IO		014		2/33	
R7111	IO		016		2/33	
R7112	IO		210		2/33	
R7113	IO		212		2/33	
R7120	IO		013		2/33	
R7121	IO		015		2/33	
R7122	IO		209		2/33	
R7123	IO		211		2/33	
R7130	IO		009		2/33	
R7131	IO		012		2/33	
R7132	IO		214		2/33	
R7133	IO		216		2/33	
R7140	IO		353		2/33	
R7141	IO		351		2/33	
R7142	IO		349		2/33	
R7143	IO		347		2/33	
R7150	IO		152		2/33	
R7151	IO		150		2/33	
R7152	IO		148		2/33	
R7153	IO		146		2/33	
R7160	IO		153		2/33	
R7161	IO		151		2/33	
R7162	IO		149		2/33	
R7163	IO		147		2/33	
R7170	IO		352		2/33	
R7171	IO		350		2/33	
R7172	IO		348		2/33	
R7173	IO		346		2/33	
TB1	IO		119		1/11	
TB10	IO		318		1/11	
TB12	IO		322		1/11	
TB15	IO		124		1/11	
TB16	IO		132		1/10	
TB19	IO		334		1/10	
TB2	IO		317		1/11	
TB21	IO		344		1/10	
TB22	IO		142		1/10	
TB24	IO		133		1/10	
TB27	IO		335		1/10	
TB29	IO		345		1/10	
TB30	IO		143		1/10	
TB32	IO		117		1/17	
TB35	IO		319		1/14	
TB37	IO		323		1/14	

SYMBOL NO. 35 (CONT)

HALF GRID

DESIG	EQPT LOC	CODE	ELEM IDENT	OPT
GDXHG15	13-156	SEE NOTE 309	A	

LEAD DESIG	FUNC	TERM. MOD	TERM.	TERM. OPT	DESTINATION	NOTE
TB38	IO		121		1/17	
TB4	IO		321		1/11	
TB40	IO		118		1/14	
TB43	IO		320		1/17	
TB45	IO		324		1/17	
TB46	IO		122		1/14	
TB49	IO		134		1/17	
TB50	IO		332		1/14	
TB52	IO		342		1/14	
TB55	IO		144		1/17	
TB57	IO		135		1/14	
TB58	IO		333		1/17	
TB60	IO		343		1/17	
TB63	IO		145		1/14	
TB7	IO		123		1/11	
TB9	IO		120		1/11	
T7100	IO		110		2/34	
T7101	IO		111		2/34	
T7102	IO		313		2/34	
T7103	IO		315		2/34	
T7110	IO		114		2/34	
T7111	IO		116		2/34	
T7112	IO		310		2/34	
T7113	IO		312		2/34	
T7120	IO		113		2/34	
T7121	IO		115		2/34	
T7122	IO		309		2/34	
T7123	IO		311		2/34	
T7130	IO		109		2/34	
T7131	IO		112		2/34	
T7132	IO		314		2/34	
T7133	IO		316		2/34	
T7140	IO		253		2/34	
T7141	IO		251		2/34	
T7142	IO		249		2/34	
T7143	IO		247		2/34	
T7150	IO		052		2/34	
T7151	IO		050		2/34	
T7152	IO		048		2/34	
T7153	IO		046		2/34	
T7160	IO		053		2/34	
T7161	IO		051		2/34	
T7162	IO		049		2/34	
T7163	IO		047		2/34	
T7170	IO		252		2/34	
T7171	IO		250		2/34	
T7172	IO		248		2/34	
T7173	IO		246		2/34	
OASHG71	IO		237		1/9	
OCLG7	IO		241		1/9	

PART OF FS 2

SYMBOL(S) 34 35

COPYRIGHT (C) 1987 AT&T
ALL RIGHTS RESERVED

LINE UNIT, MODEL 3

DWG SIZE	ISSUE
C2	2M

AT&T BELL LABORATORIES	SD-5D180-01	B2CV

PART OF FS 2

LU3 UPPER SHELF

SYMBOL NO. 35 (CONT)

HALF GRID

DESIG	EQPT LOC	CODE	ELEM IDENT	OPT
GDXHG15	13-156	SEE NOTE 309	A	

LEAD DESIG	FUNC	TERM. MOD	TERM.	TERM. OPT	DESTINATION	NOTE
0DG7	IO		338		1/9	
0EG71	IO		341		1/9	
0PAG71	IO		236		1/9	
0SLG7	IO		240		1/9	
0256KHZ7	IO		038		1/9	
1ASWG71	IO		337		2/9	
1CLG7	IO		339		2/9	
1DG7	IO		238		2/9	
1EG71	IO		239		2/9	
1PAG71	IO		336		2/9	
1SLG7	IO		340		2/9	
1256KHZ7	IO		138		2/9	

SYMBOL NO. 36

TERMINAL FIELD

DESIG	EQPT LOC	CODE	ELEM IDENT	OPT
TF	13-162	TERMINAL FIELD	A	

LEAD DESIG	FUNC	TERM. MOD	TERM.	TERM. OPT	DESTINATION	NOTE
R9000	IO		002		2/38 TO CAD 1 - CU	
R9001	IO		003		2/38 TO CAD 1 - CU	
R9002	IO		004		2/38 TO CAD 1 - CU	
R9003	IO		005		2/38 TO CAD 1 - CU	
R9010	IO		006		2/38 TO CAD 1 - CU	
R9011	IO		007		2/38 TO CAD 1 - CU	
R9012	IO		008		2/38 TO CAD 1 - CU	
R9013	IO		009		2/38 TO CAD 1 - CU	
R9020	IO		015		2/38 TO CAD 1 - CV	
R9021	IO		016		2/38 TO CAD 1 - CV	
R9022	IO		017		2/38 TO CAD 1 - CV	
R9023	IO		018		2/38 TO CAD 1 - CV	
R9030	IO		019		2/38 TO CAD 1 - CV	
R9031	IO		020		2/38 TO CAD 1 - CV	
R9032	IO		021		2/38 TO CAD 1 - CV	
R9033	IO		022		2/38 TO CAD 1 - CV	
R9040	IO		034		2/38 TO CAD 1 - CW	
R9041	IO		035		2/38 TO CAD 1 - CW	
R9042	IO		036		2/38 TO CAD 1 - CW	
R9043	IO		037		2/38 TO CAD 1 - CW	
R9050	IO		038		2/38 TO CAD 1 - CW	

SYMBOL NO. 36 (CONT)

TERMINAL FIELD

DESIG	EQPT LOC	CODE	ELEM IDENT	OPT
TF	13-162	TERMINAL FIELD	A	

LEAD DESIG	FUNC	TERM. MOD	TERM.	TERM. OPT	DESTINATION	NOTE
					TO CAD 1 - CW	
R9051	IO		039		2/38 TO CAD 1 - CW	
R9052	IO		040		2/38 TO CAD 1 - CW	
R9053	IO		041		2/38 TO CAD 1 - CW	
R9060	IO		047		2/38 TO CAD 1 - CX	
R9061	IO		048		2/38 TO CAD 1 - CX	
R9062	IO		049		2/38 TO CAD 1 - CX	
R9063	IO		050		2/38 TO CAD 1 - CX	
R9070	IO		051		2/38 TO CAD 1 - CX	
R9071	IO		052		2/38 TO CAD 1 - CX	
R9072	IO		053		2/38 TO CAD 1 - CX	
R9073	IO		054		2/38 TO CAD 1 - CX	

SYMBOL NO. 37

TERMINAL FIELD

DESIG	EQPT LOC	CODE	ELEM IDENT	OPT
TF	13-163	TERMINAL FIELD	A	

LEAD DESIG	FUNC	TERM. MOD	TERM.	TERM. OPT	DESTINATION	NOTE
T9000	IO		002		2/38 TO CAD 1 - CU	
T9001	IO		003		2/38 TO CAD 1 - CU	
T9002	IO		004		2/38 TO CAD 1 - CU	
T9003	IO		005		2/38 TO CAD 1 - CU	
T9010	IO		006		2/38 TO CAD 1 - CU	
T9011	IO		007		2/38 TO CAD 1 - CU	
T9012	IO		008		2/38 TO CAD 1 - CU	
T9013	IO		009		2/38 TO CAD 1 - CU	
T9020	IO		015		2/38 TO CAD 1 - CV	
T9021	IO		016		2/38 TO CAD 1 - CV	
T9022	IO		017		2/38 TO CAD 1 - CV	
T9023	IO		018		2/38 TO CAD 1 - CV	
T9030	IO		019		2/38 TO CAD 1 - CV	
T9031	IO		020		2/38 TO CAD 1 - CV	
T9032	IO		021		2/38 TO CAD 1 - CV	
T9033	IO		022		2/38 TO CAD 1 - CV	
T9040	IO		034		2/38 TO CAD 1 - CW	
T9041	IO		035		2/38 TO CAD 1 - CW	
T9042	IO		036		2/38 TO CAD 1 - CW	
T9043	IO		037		2/38 TO CAD 1 - CW	
T9050	IO		038		2/38 TO CAD 1 - CW	
T9051	IO		039		2/38 TO CAD 1 - CW	
T9052	IO		040		2/38 TO CAD 1 - CW	
T9053	IO		041		2/38 TO CAD 1 - CW	
T9060	IO		047		2/38 TO CAD 1 - CX	
T9061	IO		048		2/38 TO CAD 1 - CX	
T9062	IO		049		2/38 TO CAD 1 - CX	
T9063	IO		050		2/38 TO CAD 1 - CX	
T9070	IO		051		2/38 TO CAD 1 - CX	
T9071	IO		052		2/38 TO CAD 1 - CX	
T9072	IO		053		2/38 TO CAD 1 - CX	
T9073	IO		054		2/38 TO CAD 1 - CX	

SYMBOL NO. 37 (CONT)

TERMINAL FIELD

DESIG	EQPT LOC	CODE	ELEM IDENT	OPT
TF	13-163	TERMINAL FIELD	A	

LEAD DESIG	FUNC	TERM. MOD	TERM.	TERM. OPT	DESTINATION	NOTE
T9033	IO		022		2/38 TO CAD 1 - CV	
T9040	IO		034		2/38 TO CAD 1 - CW	
T9041	IO		035		2/38 TO CAD 1 - CW	
T9042	IO		036		2/38 TO CAD 1 - CW	
T9043	IO		037		2/38 TO CAD 1 - CW	
T9050	IO		038		2/38 TO CAD 1 - CW	
T9051	IO		039		2/38 TO CAD 1 - CW	
T9052	IO		040		2/38 TO CAD 1 - CW	
T9053	IO		041		2/38 TO CAD 1 - CW	
T9060	IO		047		2/38 TO CAD 1 - CX	
T9061	IO		048		2/38 TO CAD 1 - CX	
T9062	IO		049		2/38 TO CAD 1 - CX	
T9063	IO		050		2/38 TO CAD 1 - CX	
T9070	IO		051		2/38 TO CAD 1 - CX	
T9071	IO		052		2/38 TO CAD 1 - CX	
T9072	IO		053		2/38 TO CAD 1 - CX	
T9073	IO		054		2/38 TO CAD 1 - CX	

SYMBOL NO. 38

HALF GRID

DESIG	EQPT LOC	CODE	ELEM IDENT	OPT
GDXHG18	13-164	SEE NOTE 309	A	

LEAD DESIG	FUNC	TERM. MOD	TERM.	TERM. OPT	DESTINATION	NOTE
+300V16	IO		006		1/38	
+300V17	IO		106		1/38	
+5V04	IO		001		1/1	
+5V13	IO		101		1/1	
-48V16	PWR		003		2/38	
	PWR		004		2/41,2/57	
GRD13164	GRD		000			
	GRD		036			
	GRD		036			
	GRD		037			
	GRD		037			
	GRD		055			
	GRD		056			
	GRD		100			
	GRD		136			

SYMBOL NO. 38 (CONT)

HALF GRID

DESIG	EQPT LOC	CODE	ELEM IDENT	OPT
GDXHG18	13-164	SEE NOTE 309	A	

LEAD DESIG	FUNC	TERM. MOD	TERM.	TERM. OPT	DESTINATION	NOTE
	GRD		136			
	GRD		137			
	GRD		137			
	GRD		140			
	GRD		141			
	GRD		155			
	GRD		156			
	GRD		200			
	GRD		203			
	GRD		204			
	GRD		206			
	GRD		207			
	GRD		208			
	GRD		255			
	GRD		256			
	GRD		300			
	GRD		301			
	GRD		302			
	GRD		303			
	GRD		304			
	GRD		306			
	GRD		307			
	GRD		308			
	GRD		355			
	GRD		356			
RB1	IO		019			1/11
RB10	IO		218			1/11
RB12	IO		222			1/11
RB15	IO		024			1/11
RB16	IO		032			1/10
RB19	IO		234			1/10
RB2	IO		217			1/11
RB21	IO		244			1/10
RB22	IO		042			1/10
RB24	IO		033			1/10
RB27	IO		235			1/10
RB29	IO		243			1/10
RB30	IO		043			1/10
RB32	IO		017			1/17
RB35	IO		219			1/14
RB37	IO		223			1/14
RB38	IO		021			1/17
RB4	IO		221			1/11
RB40	IO		018			1/14
RB43	IO		220			1/17
RB45	IO		224			1/17
RB46	IO		022			1/14
RB49	IO		034			1/17
RB50	IO		232			1/14
RB52	IO		242			1/14

PART OF FS 2

SYMBOL(S) 35 36 37 38

COPYRIGHT (C) 1987 AT&T
ALL RIGHTS RESERVED

LINE UNIT, MODEL 3

DWG SIZE C2

ISSUE 2M

AT&T BELL LABORATORIES

SD-5D180-01

B2CW

PART OF FS 2

LU3 UPPER SHELF

SYMBOL NO. 38 (CONT)

HALF GRID

DESIG	EQPT LOC	CODE	ELEM IDENT	OPT
GDXHG18	13-164	SEE NOTE 309	A	

LEAD DESIG	FUNC	TERM. MOD	TERM.	TERM. OPT	DESTINATION	NOTE
RB55	10		044		1/17	
RB57	10		035		1/14	
RB58	10		233		1/17	
RB60	10		243		1/17	
RB63	10		045		1/14	
RB7	10		023		1/11	
RB9	10		020		1/11	
R9000	10		010		2/36	
R9001	10		011		2/36	
R9002	10		213		2/36	
R9003	10		215		2/36	
R9010	10		014		2/36	
R9011	10		016		2/36	
R9012	10		210		2/36	
R9013	10		212		2/36	
R9020	10		013		2/36	
R9021	10		015		2/36	
R9022	10		209		2/36	
R9023	10		211		2/36	
R9030	10		009		2/36	
R9031	10		012		2/36	
R9032	10		214		2/36	
R9033	10		216		2/36	
R9040	10		353		2/36	
R9041	10		351		2/36	
R9042	10		349		2/36	
R9043	10		347		2/36	
R9050	10		152		2/36	
R9051	10		150		2/36	
R9052	10		148		2/36	
R9053	10		146		2/36	
R9060	10		153		2/36	
R9061	10		151		2/36	
R9062	10		149		2/36	
R9063	10		147		2/36	
R9070	10		352		2/36	
R9071	10		350		2/36	
R9072	10		348		2/36	
R9073	10		346		2/36	
TB1	10		119		1/11	
TB10	10		318		1/11	
TB12	10		322		1/11	
TB15	10		124		1/11	
TB16	10		132		1/10	
TB19	10		334		1/10	
TB2	10		317		1/11	
TB21	10		344		1/10	
TB22	10		142		1/10	
TB24	10		133		1/10	
TB27	10		335		1/10	
TB29	10		345		1/10	
TB30	10		143		1/10	
TB32	10		117		1/17	
TB35	10		319		1/14	
TB37	10		323		1/14	
TB38	10		121		1/17	
TB4	10		321		1/11	
TB40	10		118		1/14	

SYMBOL NO. 38 (CONT)

HALF GRID

DESIG	EQPT LOC	CODE	ELEM IDENT	OPT
GDXHG18	13-164	SEE NOTE 309	A	

LEAD DESIG	FUNC	TERM. MOD	TERM.	TERM. OPT	DESTINATION	NOTE
TB43	10		320		1/17	
TB45	10		324		1/17	
TB46	10		122		1/14	
TB49	10		134		1/17	
TB50	10		332		1/14	
TB52	10		342		1/14	
TB55	10		144		1/17	
TB57	10		135		1/14	
TB58	10		333		1/17	
TB60	10		343		1/17	
TB63	10		145		1/14	
TB7	10		123		1/11	
TB9	10		120		1/11	
T9000	10		110		2/37	
T9001	10		111		2/37	
T9002	10		313		2/37	
T9003	10		315		2/37	
T9010	10		114		2/37	
T9011	10		116		2/37	
T9012	10		310		2/37	
T9013	10		312		2/37	
T9020	10		113		2/37	
T9021	10		115		2/37	
T9022	10		309		2/37	
T9023	10		311		2/37	
T9030	10		109		2/37	
T9031	10		112		2/37	
T9032	10		314		2/37	
T9033	10		316		2/37	
T9040	10		253		2/37	
T9041	10		251		2/37	
T9042	10		249		2/37	
T9043	10		247		2/37	
T9050	10		052		2/37	
T9051	10		050		2/37	
T9052	10		048		2/37	
T9053	10		046		2/37	
T9060	10		053		2/37	
T9061	10		051		2/37	
T9062	10		049		2/37	
T9063	10		047		2/37	
T9070	10		252		2/37	
T9071	10		250		2/37	
T9072	10		248		2/37	
T9073	10		246		2/37	
0ASWG90	10		237		1/9	
0ELHG90	10		241		1/9	
0DG90	10		338		1/9	
0EG90	10		341		1/9	
0PAG90	10		236		1/9	
0SLG9	10		240		1/9	
0256KHZ9	10		038		1/9	
1ASWG90	10		337		2/9	
1ELHG90	10		339		2/9	
1DG90	10		238		2/9	
1EG90	10		239		2/9	
1PAG90	10		336		2/9	
1SLG9	10		340		2/9	
1256KHZ9	10		138		2/9	

SYMBOL NO. 39

TERMINAL FIELD

DESIG	EQPT LOC	CODE	ELEM IDENT	OPT
TF	13-170	TERMINAL FIELD	A	

LEAD DESIG	FUNC	TERM. MOD	TERM.	TERM. OPT	DESTINATION	NOTE
R9100	10		002		2/41 TO CAD 1 - CY	
R9101	10		003		2/41 TO CAD 1 - CY	
R9102	10		004		2/41 TO CAD 1 - CY	
R9103	10		005		2/41 TO CAD 1 - CY	
R9110	10		006		2/41 TO CAD 1 - CY	
R9111	10		007		2/41 TO CAD 1 - CY	
R9112	10		008		2/41 TO CAD 1 - CY	
R9113	10		009		2/41 TO CAD 1 - CY	
R9120	10		015		2/41 TO CAD 1 - CZ	
R9121	10		016		2/41 TO CAD 1 - CZ	
R9122	10		017		2/41 TO CAD 1 - CZ	
R9123	10		018		2/41 TO CAD 1 - CZ	
R9130	10		019		2/41 TO CAD 1 - CZ	
R9131	10		020		2/41 TO CAD 1 - CZ	
R9132	10		021		2/41 TO CAD 1 - CZ	
R9133	10		022		2/41 TO CAD 1 - CZ	
R9140	10		034		2/41 TO CAD 1 - DA	
R9141	10		035		2/41 TO CAD 1 - DA	
R9142	10		036		2/41 TO CAD 1 - DA	
R9143	10		037		2/41 TO CAD 1 - DA	
R9150	10		038		2/41 TO CAD 1 - DA	
R9151	10		039		2/41 TO CAD 1 - DA	
R9152	10		040		2/41 TO CAD 1 - DA	
R9153	10		041		2/41 TO CAD 1 - DA	
R9160	10		047		2/41 TO CAD 1 - DB	
R9161	10		048		2/41 TO CAD 1 - DB	
R9162	10		049		2/41 TO CAD 1 - DB	
R9163	10		050		2/41 TO CAD 1 - DB	
R9170	10		051		2/41 TO CAD 1 - DB	
R9171	10		052		2/41 TO CAD 1 - DB	
R9172	10		053		2/41 TO CAD 1 - DB	
R9173	10		054		2/41 TO CAD 1 - DB	

PART OF FS 2

SYMBOL(S) 38 39

COPYRIGHT (C) 1987 AT&T
ALL RIGHTS RESERVED

LINE UNIT, MODEL 3

DWG SIZE	ISSUE
CZ	2M

AT&T BELL LABORATORIES	SD-5D180-01	B2CX

PART OF FS 2

LU3 UPPER SHELF

SYMBOL NO. 40

TERMINAL FIELD

DESIG	EQPT LOC	CODE	ELEM IDENT	OPT
TF	13-171	TERMINAL FIELD	A	

LEAD DESIG	FUNC	TERM. MOD	TERM.	TERM. OPT	DESTINATION	NOTE
T9100	IO		002		2/41 TO CAD 1 - CY	
T9101	IO		003		2/41 TO CAD 1 - CY	
T9102	IO		004		2/41 TO CAD 1 - CY	
T9103	IO		005		2/41 TO CAD 1 - CY	
T9110	IO		006		2/41 TO CAD 1 - CY	
T9111	IO		007		2/41 TO CAD 1 - CY	
T9112	IO		008		2/41 TO CAD 1 - CY	
T9113	IO		009		2/41 TO CAD 1 - CY	
T9120	IO		015		2/41 TO CAD 1 - CZ	
T9121	IO		016		2/41 TO CAD 1 - CZ	
T9122	IO		017		2/41 TO CAD 1 - CZ	
T9123	IO		018		2/41 TO CAD 1 - CZ	
T9130	IO		019		2/41 TO CAD 1 - CZ	
T9131	IO		020		2/41 TO CAD 1 - CZ	
T9132	IO		021		2/41 TO CAD 1 - CZ	
T9133	IO		022		2/41 TO CAD 1 - CZ	
T9140	IO		034		2/41 TO CAD 1 - DA	
T9141	IO		035		2/41 TO CAD 1 - DA	
T9142	IO		036		2/41 TO CAD 1 - DA	
T9143	IO		037		2/41 TO CAD 1 - DA	
T9150	IO		038		2/41 TO CAD 1 - DA	
T9151	IO		039		2/41 TO CAD 1 - DA	
T9152	IO		040		2/41 TO CAD 1 - DA	
T9153	IO		041		2/41 TO CAD 1 - DA	
T9160	IO		047		2/41 TO CAD 1 - DB	
T9161	IO		048		2/41 TO CAD 1 - DB	
T9162	IO		049		2/41 TO CAD 1 - DB	
T9163	IO		050		2/41 TO CAD 1 - DB	
T9170	IO		051		2/41 TO CAD 1 - DB	
T9171	IO		052		2/41 TO CAD 1 - DB	
T9172	IO		053		2/41 TO CAD 1 - DB	
T9173	IO		054		2/41 TO CAD 1 - DB	

SYMBOL NO. 41

HALF GRID

DESIG	EQPT LOC	CODE	ELEM IDENT	OPT
GDXHG19	13-172	SEE NOTE 309	A	

LEAD DESIG	FUNC	TERM. MOD	TERM.	TERM. OPT	DESTINATION	NOTE
+300V18	IO		006		1/41	
+300V19	IO		106		1/41	
+5V04	IO		001		1/1	
+5V13	IO		101		1/1	
-48V16	PWR		003		2/38	
	PWR		004		2/38	
GRD13172	GRD		000			
	GRD		036			
	GRD		036			
	GRD		036			
	GRD		037			
	GRD		037			
	GRD		055			
	GRD		056			
	GRD		100			
	GRD		136			
	GRD		136			
	GRD		136			
	GRD		137			
	GRD		137			
	GRD		140			
	GRD		141			
	GRD		155			
	GRD		156			
	GRD		200			
	GRD		203			
	GRD		204			
	GRD		206			
	GRD		207			
	GRD		208			
	GRD		255			
	GRD		256			
	GRD		300			
	GRD		301			
	GRD		302			
	GRD		303			
	GRD		304			
	GRD		306			
	GRD		307			
	GRD		308			
	GRD		355			
	GRD		356			
RB0	IO		017		1/11	
RB11	IO		220		1/11	
RB13	IO		224		1/11	
RB14	IO		022		1/11	
RB17	IO		034		1/10	
RB18	IO		232		1/10	
RB20	IO		242		1/10	
RB23	IO		044		1/10	
RB25	IO		035		1/10	
RB26	IO		233		1/10	
RB28	IO		243		1/10	
RB3	IO		219		1/11	
RB31	IO		045		1/10	
RB33	IO		019		1/14	
RB34	IO		217		1/17	
RB36	IO		221		1/17	
RB39	IO		023		1/14	
RB41	IO		020		1/17	

SYMBOL NO. 41 (CONT)

HALF GRID

DESIG	EQPT LOC	CODE	ELEM IDENT	OPT
GDXHG19	13-172	SEE NOTE 309	A	

LEAD DESIG	FUNC	TERM. MOD	TERM.	TERM. OPT	DESTINATION	NOTE
RB42	IO		218		1/14	
RB44	IO		222		1/14	
RB47	IO		024		1/17	
RB48	IO		032		1/14	
RB5	IO		223		1/11	
RB51	IO		234		1/17	
RB53	IO		244		1/17	
RB54	IO		042		1/14	
RB56	IO		033		1/17	
RB59	IO		235		1/14	
RB6	IO		021		1/11	
RB61	IO		245		1/14	
RB62	IO		043		1/17	
RB8	IO		018		1/11	
R9100	IO		010		2/39	
R9101	IO		011		2/39	
R9102	IO		213		2/39	
R9103	IO		215		2/39	
R9110	IO		014		2/39	
R9111	IO		016		2/39	
R9112	IO		210		2/39	
R9113	IO		212		2/39	
R9120	IO		013		2/39	
R9121	IO		015		2/39	
R9122	IO		209		2/39	
R9123	IO		211		2/39	
R9130	IO		009		2/39	
R9131	IO		012		2/39	
R9132	IO		214		2/39	
R9133	IO		216		2/39	
R9140	IO		353		2/39	
R9141	IO		351		2/39	
R9142	IO		349		2/39	
R9143	IO		347		2/39	
R9150	IO		152		2/39	
R9151	IO		150		2/39	
R9152	IO		148		2/39	
R9153	IO		146		2/39	
R9160	IO		153		2/39	
R9161	IO		151		2/39	
R9162	IO		149		2/39	
R9163	IO		147		2/39	
R9170	IO		352		2/39	
R9171	IO		350		2/39	
R9172	IO		348		2/39	
R9173	IO		346		2/39	
TB0	IO		117		1/11	
TB11	IO		320		1/11	
TB13	IO		324		1/11	
TB14	IO		122		1/11	
TB17	IO		134		1/10	
TB18	IO		332		1/10	
TB20	IO		342		1/10	
TB23	IO		144		1/10	
TB25	IO		135		1/10	
TB26	IO		333		1/10	
TB28	IO		343		1/10	
TB3	IO		319		1/11	
TB31	IO		145		1/10	
TB33	IO		119		1/14	

SYMBOL NO. 41 (CONT)

HALF GRID

DESIG	EQPT LOC	CODE	ELEM IDENT	OPT
GDXHG19	13-172	SEE NOTE 309	A	

LEAD DESIG	FUNC	TERM. MOD	TERM.	TERM. OPT	DESTINATION	NOTE
TB34	IO		317		1/17	
TB36	IO		321		1/17	
TB39	IO		123		1/14	
TB41	IO		120		1/17	
TB42	IO		318		1/14	
TB44	IO		322		1/14	
TB47	IO		124		1/17	
TB48	IO		132		1/14	
TB5	IO		323		1/11	
TB51	IO		334		1/17	
TB53	IO		344		1/17	
TB54	IO		142		1/14	
TB56	IO		133		1/17	
TB59	IO		335		1/14	
TB6	IO		121		1/11	
TB61	IO		345		1/14	
TB62	IO		143		1/17	
TB8	IO		118		1/11	
T9100	IO		110		2/40	
T9101	IO		111		2/40	
T9102	IO		313		2/40	
T9103	IO		315		2/40	
T9110	IO		114		2/40	
T9111	IO		116		2/40	
T9112	IO		310		2/40	
T9113	IO		312		2/40	
T9120	IO		113		2/40	
T9121	IO		115		2/40	
T9122	IO		309		2/40	
T9123	IO		311		2/40	
T9130	IO		109		2/40	
T9131	IO		112		2/40	
T9132	IO		314		2/40	
T9133	IO		316		2/40	
T9140	IO		253		2/40	
T9141	IO		251		2/40	
T9142	IO		249		2/40	
T9143	IO		247		2/40	
T9150	IO		052		2/40	
T9151	IO		050		2/40	
T9152	IO		048		2/40	
T9153	IO		046		2/40	
T9160	IO		053		2/40	
T9161	IO		051		2/40	
T9162	IO		049		2/40	
T9163	IO		047		2/40	
T9170	IO		252		2/40	
T9171	IO		250		2/40	
T9172	IO		248		2/40	
T9173	IO		246		2/40	

PART OF FS 2

SYMBOL(S) 40 41

COPYRIGHT (C) 1987 AT&T
ALL RIGHTS RESERVED

LINE UNIT, MODEL 3

DWG SIZE C2

ISSUE 2M

AT&T BELL LABORATORIES

SD-5D180-01

B2CY

PART OF FS 2

LU3 UPPER SHELF

SYMBOL NO. 41 (CONT)

HALF GRID

DESIG	EQPT LOC	CODE	ELEM IDENT	OPT
GDXHG19	13-172	SEE NOTE 309	A	

LEAD DESIG	FUNC	TERM. MOD	TERM.	TERM. OPT	DESTINATION	NOTE
0ASWG91	IO		237		1/9	
0CLHG91	IO		241		1/9	
0DG91	IO		338		1/9	
0EG91	IO		341		1/9	
0PAG91	IO		236		1/9	
0SLG9	IO		240		1/9	
0256KHZ9	IO		038		1/9	
1ASWG91	IO		337		2/9	
1CLHG91	IO		339		2/9	
1DG91	IO		238		2/9	
1EG91	IO		239		2/9	
1PAG91	IO		336		2/9	
1SLG9	IO		340		2/9	
1256KHZ9	IO		138		2/9	

SYMBOL NO. 42

AUXILIARY CIRCUIT

DESIG	EQPT LOC	CODE	ELEM IDENT	OPT
1AUX	13-178	MC5X254A1	A	

LEAD DESIG	FUNC	TERM. MOD	TERM.	TERM. OPT	DESTINATION	NOTE
+5V13	IO		024		1/1	
	IO		124		1/1	
	IO		224		1/1	
	IO		324		1/1	
-48V17	PWR		302		2/42	
	PWR		303		2/42	
	PWR		304		2/58	
	PWR		305		2/42	
-5V1	IO		256		2/1	
	IO		356		2/1	
GRD13172	GRD		000			
	GRD		032			
	GRD		100			
	GRD		132			
	GRD		200			
	GRD		206			
	GRD		207			
	GRD		208			
	GRD		209			
	GRD		232			
	GRD		234			
	GRD		235			
	GRD		236			
	GRD		237			
	GRD		238			
	GRD		239			
	GRD		240			
	GRD		241			
	GRD		242			
	GRD		243			

SYMBOL NO. 42 (CONT)

AUXILIARY CIRCUIT

DESIG	EQPT LOC	CODE	ELEM IDENT	OPT
1AUX	13-178	MC5X254A1	A	

LEAD DESIG	FUNC	TERM. MOD	TERM.	TERM. OPT	DESTINATION	NOTE
	GRD		244			
	GRD		245			
	GRD		246			
	GRD		300			
	GRD		332			
	GRD		334			
	GRD		336			
	GRD		338			
	GRD		340			
	GRD		342			
	GRD		344			
	GRD		346			
1AASWO	IO		337		2/9	
1AASW1	IO		339		2/9	
1CLAUX	IO		341		2/9	
1CURPRN	IO		012		2/1	
1CURPRP	IO		112		2/1	
1DAUX	IO		345		2/9	
1EAUX	IO		343		2/9	
1PAA	IO		335		2/9	

SYMBOL NO. 43

GROUND LUG

DESIG	EQPT LOC	CODE	ELEM IDENT	OPT
LUG	10-014	GROUND LUG	A	

LEAD DESIG	FUNC	TERM. MOD	TERM.	TERM. OPT	DESTINATION	NOTE
GRDLUG	GRD		080		TO CAD 1 - DN	

SYMBOL NO. 44

POWER LUG

DESIG	EQPT LOC	CODE	ELEM IDENT	OPT
LUG	10-022	POWER LUG	A	

LEAD DESIG	FUNC	TERM. MOD	TERM.	TERM. OPT	DESTINATION	NOTE
-48V10	PWR		080		2/1 TO CAD 1 - DM	

SYMBOL NO. 45

POWER LUG

DESIG	EQPT LOC	CODE	ELEM IDENT	OPT
LUG	10-032	POWER LUG	A	

LEAD DESIG	FUNC	TERM. MOD	TERM.	TERM. OPT	DESTINATION	NOTE
-48V10	PWR		180		2/1	206

SYMBOL NO. 46

GROUND LUG

DESIG	EQPT LOC	CODE	ELEM IDENT	OPT
LUG	10-057	GROUND LUG	A	

LEAD DESIG	FUNC	TERM. MOD	TERM.	TERM. OPT	DESTINATION	NOTE
GRDLUG	GRD		080		TO CAD 1 - DN	

SYMBOL NO. 47

POWER LUG

DESIG	EQPT LOC	CODE	ELEM IDENT	OPT
LUG	10-064	POWER LUG	A	

LEAD DESIG	FUNC	TERM. MOD	TERM.	TERM. OPT	DESTINATION	NOTE
-48V11	PWR		080		2/5 TO CAD 1 - DM	

SYMBOL NO. 48

GROUND LUG

DESIG	EQPT LOC	CODE	ELEM IDENT	OPT
LUG	10-105	GROUND LUG	A	

LEAD DESIG	FUNC	TERM. MOD	TERM.	TERM. OPT	DESTINATION	NOTE
GRDLUG	GRD		080		TO CAD 1 - DN	

SYMBOL NO. 49

POWER LUG

DESIG	EQPT LOC	CODE	ELEM IDENT	OPT
LUG	10-108	POWER LUG	A	

LEAD DESIG	FUNC	TERM. MOD	TERM.	TERM. OPT	DESTINATION	NOTE
-48V12	PWR		180		2/14 TO CAD 1 - DM	

SYMBOL NO. 50

GROUND LUG

DESIG	EQPT LOC	CODE	ELEM IDENT	OPT
LUG	10-121	GROUND LUG	A	

LEAD DESIG	FUNC	TERM. MOD	TERM.	TERM. OPT	DESTINATION	NOTE
GRDLUG	GRD		080		TO CAD 1 - DN	

SYMBOL NO. 51

POWER LUG

DESIG	EQPT LOC	CODE	ELEM IDENT	OPT
LUG	10-124	POWER LUG	A	

LEAD DESIG	FUNC	TERM. MOD	TERM.	TERM. OPT	DESTINATION	NOTE
-48V13	PWR		180		2/20 TO CAD 1 - DM	

PART OF FS 2

SYMBOL(S) 41 42 43 44 45 46 47 48 49 50 51

COPYRIGHT (C) 1987 AT&T
ALL RIGHTS RESERVED

LINE UNIT, MODEL 3

DWG SIZE: D

ISSUE: 2M

AT&T BELL LABORATORIES

5D-5D180-01

B2DA

PART OF FS 2

LU3 UPPER SHELF

SYMBOL NO. 52

GROUND LUG

DESIG	EQPT LOC	CODE	ELEM IDENT	OPT
LUG	10-129	GROUND LUG	A	

LEAD DESIG	FUNC	TERM. MOD	TERM.	TERM. OPT	DESTINATION	NOTE
GRDLUG	GRD		0B0		TO CAD 1 - DN	

SYMBOL NO. 53

POWER LUG

DESIG	EQPT LOC	CODE	ELEM IDENT	OPT
LUG	10-145	POWER LUG	A	

LEAD DESIG	FUNC	TERM. MOD	TERM.	TERM. OPT	DESTINATION	NOTE
-48V14	PWR		0B0		2/26 TO CAD 1 - DM	

SYMBOL NO. 54

GROUND LUG

DESIG	EQPT LOC	CODE	ELEM IDENT	OPT
LUG	10-153	GROUND LUG	A	

LEAD DESIG	FUNC	TERM. MOD	TERM.	TERM. OPT	DESTINATION	NOTE
GRDLUG	GRD		0B0		TO CAD 1 - DN	

SYMBOL NO. 55

POWER LUG

DESIG	EQPT LOC	CODE	ELEM IDENT	OPT
LUG	10-156	POWER LUG	A	

LEAD DESIG	FUNC	TERM. MOD	TERM.	TERM. OPT	DESTINATION	NOTE
-48V15	PWR		1B0		2/32 TO CAD 1 - DM	

SYMBOL NO. 56

GROUND LUG

DESIG	EQPT LOC	CODE	ELEM IDENT	OPT
LUG	10-164	GROUND LUG	A	

LEAD DESIG	FUNC	TERM. MOD	TERM.	TERM. OPT	DESTINATION	NOTE
GRDLUG	GRD		2B0		TO CAD 1 - DN	

SYMBOL NO. 57

POWER LUG

DESIG	EQPT LOC	CODE	ELEM IDENT	OPT
LUG	10-169	POWER LUG	A	

LEAD DESIG	FUNC	TERM. MOD	TERM.	TERM. OPT	DESTINATION	NOTE
-48V16	PWR		0B0		2/38 TO CAD 1 - DM	

SYMBOL NO. 58

POWER LUG

DESIG	EQPT LOC	CODE	ELEM IDENT	OPT
LUG	10-172	POWER LUG	A	

LEAD DESIG	FUNC	TERM. MOD	TERM.	TERM. OPT	DESTINATION	NOTE
-48V17	PWR		3B0		2/42	206

PART OF FS 2

SYMBOL(S) 52 53 54 55 56 57 58

COPYRIGHT (C) 1987 AT&T
ALL RIGHTS RESERVED

LINE UNIT, MODEL 3

DWG SIZE	ISSUE
D2	1

A'T&T BELL LABORATORIES	SD-5D180-01	B2DB

APPARATUS FIGURES

EQL	04-008	04-016	04-024	04-032	04-042	04-050	04-058	04-066	04-074	04-084	04-092	04-100	04-108	04-116	04-124	04-132	04-140	04-148	04-156	04-164	04-172	04-178	EQL
APPARATUS FIGURE NUMBER	CODE	CODE	CODE	CODE	CODE	CODE	CODE	CODE	CODE	CODE	CODE	CODE	CODE	CODE	CODE	CODE	CODE	CODE	CODE	CODE	CODE	CODE	APPARATUS FIGURE NUMBER
1* (F)																							1* (F)
1* (E)																							1* (E)
2	494GB									TN831	TN832												2
2 (Z)					TN335C	TN335C	TN335C	TN335C															2 (Z)
2 (Y)					AJT5	AJT5	AJT5	AJT5															2 (Y)
2 (X)					AJT6	AJT6	AJT6	AJT6															2 (X)
2 (W)					AJT408	AJT408	AJT408	AJT408															2 (W)
2 (V)					AJT41	AJT41	AJT41	AJT41															2 (V)
2 (U)					AJT7	AJT7	AJT7	AJT7															2 (U)
2 (T)					AJT50	AJT50	AJT50	AJT50															2 (T)
2 (S)												TN1048	TN1048	TN1048	TN1048								2 (S)
2 (R)												TN1058	TN1058	TN1058	TN1058								2 (R)
2 (Q)												TN1058B	TN1058B	TN1058B	TN1058B								2 (Q)
2 (P)												TN1535	TN1535	TN1535	TN1535								2 (P)
2 (N)		MC5D045A3	MC5D045A3																				2 (N)
2 (M)		MC5X242A1	MC5X242A1																				2 (M)
2 (K)		MC5X251A1	MC5X251A1																				2 (K)
3																TN1048	TN1048						3
4																TN1058	TN1058						4
5																TN1058B	TN1058B						5
6																TN1535	TN1535						6
7-9**																							7-9**
10																		TN1048	TN1048				10
11																		TN1058	TN1058				11
12																		TN1058B	TN1058B				12
13																		TN1535	TN1535				13
14-16**																							14-16**

* WIRING AS PER FS 1 & 2
** RESERVED FOR FUTURE APPLICATIONS

Copyright 1988 AT&T
All Rights Reserved

LINE UNIT, MODEL 9

DWG SIZE: 6B

ISSUE: 3M

AT&T | SD-5D180-01 | SHEET: C1

APPARATUS INDEX

EQL	04-008	04-016	04-024	04-032	04-042	04-050	04-058	04-066	04-074	04-082	04-092	04-100	04-108	04-116	04-124	04-132	04-140	04-148	04-156	04-164	04-172	04-178	EQL
APPARATUS FIGURE NUMBER	CODE	CODE	CODE	CODE	CODE	CODE	CODE	CODE	CODE	CODE	CODE	CODE	CODE	CODE	CODE	CODE	CODE	CODE	CODE	CODE	CODE	CODE	APPARATUS FIGURE NUMBER
17																				TN1048	TN1048		17
18																				TN1058	TN1058		18
19																				TN1561	TN1561		19
20																				TN1535	TN1535		20
21-23**																							21-23**
24				MC5D045A3																			24
25				MC5X242A1																			25
26				MC5X251A1																			26
27-31**																							27-31**
32																							32
33																							33
34																							34
35-39**																							35-39**
40																						MC5X254A1	40
41																							41
42-45**																							42-45**
2 Ⓙ									UN322														2 Ⓙ
2 Ⓖ									UN402														2 Ⓖ

* WIRING AS PER FS 1 & 2
** RESERVED FOR FUTURE APPLICATIONS

Copyright © 1987 AT&T
All Rights Reserved

LINE UNIT, MODEL 5

DWG SIZE 6S

ISSUE 2M

AT&T BELL LABORATORIES | SD-5D180-01 | SHEET C2

APPARATUS FIGURES

EQL	13-008	13-016	13-024	13-032	13-042	13-050	13-058	13-066	13-074	13-084	13-092	13-100	13-108	13-116	13-124	13-132	13-140	13-148	13-156	13-164	13-172	13-178	EQL
APPARATUS FIGURE NUMBER	CODE	CODE	CODE	CODE	CODE	CODE	CODE	CODE	CODE	CODE	CODE	CODE	CODE	CODE	CODE	CODE	CODE	CODE	CODE	CODE	CODE	CODE	APPARATUS FIGURE NUMBER
1* (F)																							1* (F)
1* (E)																							1* (E)
2	494GB									TN831	TN832												2
2 (Z)					TN335C	TN335C	TN335C	TN335C															2 (Z)
2 (Y)					AJT5	AJT5	AJT5	AJT5															2 (Y)
2 (X)					AJT6	AJT6	AJT6	AJT6															2 (X)
2 (W)					AJT40B	AJT40B	AJT40B	AJT40B															2 (W)
2 (V)					AJT41	AJT41	AJT41	AJT41															2 (V)
2 (U)					AJT7	AJT7	AJT7	AJT7															2 (U)
2 (T)					AJT50	AJT50	AJT50	AJT50															2 (T)
2 (S)												TN1048	TN1048	TN1048	TN1048								2 (S)
2 (R)												TN1058	TN1058	TN1058	TN1058								2 (R)
2 (Q)												TN1058B	TN1058B	TN1058B	TN1058B								2 (Q)
2 (P)												TN1535	TN1535	TN1535	TN1535								2 (P)
2 (N)		MC5D045A3	MC5D045A3																				2 (N)
2 (M)		MC5X242A1	MC5X242A1																				2 (M)
2 (K)		MC5X251A1	MC5X251A1																				2 (K)
3																TN1048	TN1048						3
4																TN1058	TN1058						4
5																TN1058B	TN1058B						5
6																TN1535	TN1535						6
7-9**																							7-9**
10																		TN1048	TN1048				10
11																		TN1058	TN1058				11
12																		TN1058B	TN1058B				12
13																		TN1535	TN1535				13
14-16**																							14-16**

* WIRING AS PER FS 1 & 2
** RESERVED FOR FUTURE APPLICATIONS

Copyright 1988 AT&T
All Rights Reserved

LINE UNIT, MODEL 3

DWG SIZE 68

ISSUE 3M

AT&T

SD-5D180-01

SHEET C3

APPARATUS INDEX

EQL	13-008	13-016	13-024	13-032	13-042	13-050	13-058	13-066	13-074	13-084	13-092	13-100	13-108	13-116	13-124	13-132	13-140	13-148	13-156	13-164	13-172	13-178	EQL
APPARATUS FIGURE NUMBER	CODE	CODE	CODE	CODE	CODE	CODE	CODE	CODE	CODE	CODE	CODE	CODE	CODE	CODE	CODE	CODE	CODE	CODE	CODE	CODE	CODE	CODE	APPARATUS FIGURE NUMBER
17																				TN1048	TN1048		17
18																				TN1058	TN1058		18
19																				TN1561	TN1561		19
20																				TN1535	TN1535		20
21-23**																							21-23**
24																							24
25																							25
26																							26
27-31**																							27-31**
32				MC5D045A3																			32
33				MC5X242A1																			33
34				MC5X251A1																			34
35-39**																							35-39**
40																							40
41																					MC5X254A1		41
42-45**																							42-45**
2 (J)									UN322														2 (J)
2 (G)									UN402														2 (G)

* WIRING AS PER FS 1
** RESERVED FOR FUTURE APPLICATIONS

Copyright © 1987 AT&T
All Rights Reserved

LINE UNIT, MODEL 3	DWG SIZE 8S	ISSUE 2M
AT&T BELL LABORATORIES SD-5D180-01		SHEET C4

CIRCUIT NOTES:

101.

DESIG	FUSE AMP	POTENTIAL	ONE PER
FA1	5	-48V	FS 1 SYMBOLS 1,2,3,4,42
FA2	5	-48V	FS 1 SYMBOLS 5,6,7,8,9,10,11
FA3	1-1/3	-48V	FS 1 SYMBOLS 14,17
FA4	1-1/3	-48V	FS 1 SYMBOLS 20,23
FA5	1-1/3	-48V	FS 1 SYMBOLS 26,29
FA6	1-1/3	-48V	FS 1 SYMBOLS 32,35
FA7	1-1/3	-48V	FS 1 SYMBOLS 38,41
FA8	5	-48V	FS 2 SYMBOLS 1,2,3,4,42
FA9	5	-48V	FS 2 SYMBOLS 5,6,7,8,9,10,11
FA10	1-1/3	-48V	FS 2 SYMBOLS 14,17
FA11	1-1/3	-48V	FS 2 SYMBOLS 20,23
FA12	1-1/3	-48V	FS 2 SYMBOLS 26,29
FA13	1-1/3	-48V	FS 2 SYMBOLS 32,35
FA14	1-1/3	-48V	FS 2 SYMBOLS 38,41
FA1		GRD	FS 1 SYMBOLS 1,2,3,4,42
FA2		GRD	FS 1 SYMBOLS 5,6,7,8,9,10,11
FA3		GRD	FS 1 SYMBOLS 14,17
FA4		GRD	FS 1 SYMBOLS 20,23
FA5		GRD	FS 1 SYMBOLS 26,29
FA6		GRD	FS 1 SYMBOLS 32,35
FA7		GRD	FS 1 SYMBOLS 38,41
FA8		GRD	FS 2 SYMBOLS 1,2,3,4,42
FA9		GRD	FS 2 SYMBOLS 5,6,7,8,9,10,11
FA10		GRD	FS 2 SYMBOLS 14,17
FA11		GRD	FS 2 SYMBOLS 20,23
FA12		GRD	FS 2 SYMBOLS 26,29
FA13		GRD	FS 2 SYMBOLS 32,35
FA14		GRD	FS 2 SYMBOLS 38,41

BATTERY LEADS SHALL BE PAIRED WITH SIMILARLY DESIGNATED GROUND LEADS UP TO THE FUSE PANEL.

FUSE DESIGNATIONS FA1 AND FA8 ONLY INCLUDE FS 1 SYMBOL 42, OR FS 2 SYMBOL 42, WHEN APPARATUS FIGURES 40 OR 41 ARE USED.

BATTERY SIGNAL	VOLTAGE RANGE
-48V	-42.75 TO -52.5

Copyright © 1987 AT&T
All Rights Reserved

LINE UNIT, MODEL 3

DWG SIZE: B5

ISSUE: /

AT&T BELL LABORATORIES

SD-5D180-01

SHEET: DIA

EQUIPMENT NOTES:

201. UNLESS OTHERWISE SPECIFIED, ALL BACKPLANE WIRING WILL BE AUTOMATIC MACHINE WIRING (A-D4) 30 GAUGE, WHICH HAS BEEN PROCESSED BY THE WESWRAP PROGRAMS.

202. ALL PRINTED WIRING CONNECTIONS ARE SPECIFIED BY ED-50648 (DSR DESIGN), ASSIGNED AS OPTION F, OR ED-50640 (MLB DESIGN), ASSIGNED AS OPTION E. OPTION F, WHICH INCLUDES WIRING, AND OPTION E, WHICH REQUIRES NO ADDITIONAL WIRES, ARE EQUIVALENT CIRCUITS.

203. ALL TIP AND RING LEADS ARE PAIRED (A-D4) VIA THE WESWRAP ROUTING PROGRAM.

204. FRAME GROUNDS ARE MECHANICALLY CONNECTED FROM THE UNIT BACKPLANE WITH SCREWS TO THE FRAME HARDWARE.

205. NO ELECTRICAL CONNECTION IS MADE TO GROUND SHIELD. ED-50645-30.

206. A STRAP ED-50507-17, G31A IS REQUIRED ACROSS THE PAIR OF LUGS LISTED BELOW WHEN THE CORRESPONDING APPARATUS FIGURE IS USED.

APP FIG.	FROM LUG	TO LUG
40	01-032-180	01-172-180
41	10-032-180	10-172-180

207. THE FOLLOWING CONNECTORS ARE REQUIRED ONLY WHEN ANY OF THE LISTED APPARATUS FIGURES SHOWN BELOW ARE USED:

APP FIG SPECIFIED	FUNCTION	ELEMENTS
3,4,5, OR 6	TIP AND RING-GRIDS 4 & 5	BG THRU BV
10,11, 12, OR 13	TIP AND RING-GRIDS 6 & 7	BW THRU CL
17,18 19 OR 20	TIP AND RING-GRIDS 8 & 9	CM THRU DB

208.

CIRCUIT PACK REMOVAL DEPENDENCY TABLE				
BP TYPE	APPARATUS CODE	SG0 COMDAC0	SG1 COMDAC1	SEQUENCING REQUIRED
COMDAC [1]	UN322 UN402			
HLSC [3]	TN844() TN1401B	X	X	
CHANNEL [4]	TN335C AJT()	X	X	
ACCESS 1 [1]	TN831	X	X	$
ACCESS 2 [1]	TN832	X	X	$
HALF-GRID [10]	TN1048 TN1058() TN1535	*	*	
AUXILIARY [1]	TN1402	X	X	

EQUIPMENT NOTES (CONT):

208. (CONT)

NOTES:

DO NOT REMOVE ANY LU3 CIRCUIT PACKS "HOT"

A CIRCUIT PACK MUST BE TAKEN OUT-OF-SERVICE PRIOR TO REMOVAL FROM UNIT.

(SYMBOL)

X INDICATES, WITHIN A SERVICE GROUP, WHICH PACKS DEPEND ON THE COMDACS FOR OPERATION (I.E., REMOVAL OF COMDAC AFFECTS THE OPERATION OF THIS PACK IN SAME SG ALSO)

* HALF-GRIDS ARE NOT CLASSIFIED AS MEMBERS OF LU SERVICE GROUPS. ALL HALF-GRIDS (20 MAXIMUM PER UNIT) CAN BE CONTROLLED BY EITHER COMDAC0 OR BY COMDAC1. (REMOVAL OF COMDAC IN ONE SG WILL NOT AFFECT THE OPERATION OF ANY OF THE HALF-GRIDS IN EITHER SHELF.)

[] INDICATES NUMBER OF PACK TYPE PER SHELF IN FULLY EQUIPPED LINE UNIT.

$ THE TN831 MUST BE REMOVED BEFORE REMOVING THE TN832; CONVERSELY, THE TN832 MUST BE INSERTED PRIOR TO INSERTING THE TN831.

() INDICATES AN ALPHA-SUFFIXED CODE OR ANY OF THE FAMILY OF THE AJT CODES (E.G., AJT5 OR AJT41).

Copyright 1988 AT&T
All Rights Reserved

LINE UNIT, MODEL 3

DWG SIZE 88 | ISSUE 3M

AT&T | SD-5D180-01 | SHEET D2A

INFORMATION NOTES:

301. UNLESS OTHERWISE SPECIFIED, RESISTANCE VALUES ARE IN OHMS, CAPACITANCE VALUES ARE IN MICROFARADS, VALUES PRECEDED BY THE SYMBOL + (PLUS) OR - (MINUS) ARE IN VOLTS.

302.

FEATURE OR OPTION		PROVIDE APP FIG.	PROVIDE APP OR WRG	PROVIDE QUANTITY
BACKPLANE AND WIRING FOR UP TO 640 LINES AT A 10:1 CONCENTRATION RATIO		1	F	1 PER UNIT
BACKPLANE WITH NO WIRING FOR UP TO 640 LINES AT A 10:1 CONCENTRATION RATIO		1	E	1 PER UNIT
IN ADDITION TO APPARATUS FIGURE 1, ASSEMBLY AND EQUIPMENT ARE PROVIDED FOR ONE LINE UNIT ARRANGED FOR UP TO 640 LINES AT A 10:1 CONCENTRATION, TO PROVIDE FOR 256 LINES AT A 4:1 CONCENTRATION, INCLUDING:		2		
EIGHT CHANNEL CIRCUITS	U-LAW, 900 OHM, DOMESTIC USE (TN335C)		Z	
	U-LAW, 600 OHM EXPORT USE (AJT5)		Y	
	A-LAW, 600 OHM EXPORT USE (AJT6)		X	
	A-LAW, 600 OHM EXPORT USE (AJT40B)		W	
	A-LAW, 800 OHM EXPORT USE (AJT41)		V	
	U-LAW, 900 OHM EXPORT USE (AJT7)		U	
	A-LAW, 600 OHM EXPORT USE (AJT5Q)		T	
EIGHT HALF-GRID CIRCUITS	WHICH REQUIRE GAS TUBE PROTECTION (TN104B)		S	
	WHICH ARE COMPATIBLE WITH CARBON BLOCK PROTECTION AND 40 MA BATTERY FEED (TN1058), SEE NOTE 307.		R	1 PER UNIT
	WHICH ARE COMPATIBLE WITH CARBON BLOCK PROTECTION AND UP TO 60 MA BATTERY FEED (TN1058B). SEE NOTE 308.		Q	
	WHICH ARE COMPATIBLE WITH CARBON BLOCK PROTECTION (TN1535), SEE NOTE 306.		P	
FOUR RINGING AND TEST CIRCUITS	HAVING STANDARD FEATURES AND ADDING DISTINCTIVE RINGING FOR BUSINESS AND RESIDENCE CUSTOM SERVICES (BRCS). (MC5D045A3)		N	
	HAVING FREQUENCY SELECTIVE RINGING (FSR) 75 VRMS OUTPUT WITH A MINIMUM LOAD FOR EXPORT APPLICATION. (MC5X242A1)		M	
	HAVING EARTH-BACKED RINGING, AUTOMATIC GAIN ADJUSTMENT FEATURE, AND DISTINCTIVE RINGING FOR BRCS. (MC5X251A1) SEE NOTE 306		K	
COMMON DATA AND CONTROL CIRCUITS	STANDARD FEATURES		J	
	STANDARD FEATURES, SEE NOTE 306.		G	
FOUR ADDITIONAL HALF-GRID CIRCUITS TO PROVIDE FOR 384 LINES AT A 6:1 CONCENTRATION, ONLY IN ADDITION TO APPARATUS FIGURES 1 AND 2				
WITH OPTION S (TN104B)		3		1 PER UNIT
WITH OPTION R (TN1058), SEE NOTE 307.		4		
WITH OPTION Q (TN1058B) SEE NOTE 308.		5		
WITH OPTION P (TN1535)		6		
RESERVED FOR FUTURE APPLICATIONS		7-9		

INFORMATION NOTES (CONT):

302. (CONT)

FEATURE OR OPTION	PROVIDE APP FIG.	PROVIDE APP OR WRG	PROVIDE QUANTITY
FOUR ADDITIONAL HALF-GRID CIRCUITS TO PROVIDE FOR 512 LINES AT AN 8:1 CONCENTRATION, ONLY IN ADDITION TO:			
APPARATUS FIGURE 3 (TN1048)	10		1 PER UNIT
APPARATUS FIGURE 4 (TN1058). SEE NOTE 307.	11		
APPARATUS FIGURE 5 (TN1058B) SEE NOTE 308.	12		
APPARATUS FIGURE 6 (TN1535)	13		
RESERVED FOR FUTURE APPLICATIONS	14-16		
FOUR ADDITIONAL HALF-GRID CIRCUITS TO PROVIDE FOR 640 LINES AT A 10:1 CONCENTRATION, ONLY IN ADDITION TO:			
APPARATUS FIGURE 10 (TN1048)	17		1 PER UNIT
APPARATUS FIGURE 11 (TN1058). SEE NOTE 307.	18		
APPARATUS FIGURE 12 (TN1058B) SEE NOTE 308.	19		
APPARATUS FIGURE 13 (TN1535)	20		
RESERVED FOR FUTURE APPLICATIONS	21-23		
ONE ADDITIONAL RINGING AND TEST CIRCUIT, ONLY IN ADDITION TO APPARATUS FIGURE 2			
WITH OPTION N (MC5D045A3)	24		1 PER UNIT
WITH OPTION M (MC5X242A1)	25		
WITH OPTION K (MC5X251A1)	26		
RESERVED FOR FUTURE APPLICATIONS	27-31		
ONE ADDITIONAL RINGING AND TEST CIRCUIT, ONLY IN ADDITION TO:			
APPARATUS FIGURE 24 (MC5D045A3)	32		1 PER UNIT
APPARATUS FIGURE 25 (MC5X242A1)	33		
APPARATUS FIGURE 26 (MC5X251A1)	34		
RESERVED FOR FUTURE APPLICATIONS	35-39		
IN ADDITION TO APPARATUS FIGURE 2, ONE 3RD WIRE AUXILIARY CIRCUIT (FOR CONTROL OF PERIODIC PULSE METERING (PPM) FOR SUBSCRIBER LINES) (MC5X254A1) SEE NOTES 206 AND 306	40		1 PER UNIT
IN ADDITION TO APPARATUS FIGURE 40, ONE ADDITIONAL 3RD WIRE AUXILIARY CIRCUIT (FOR CONTROL OF PPM FOR SUBSCRIBER LINES) (MC5X254A1) SEE NOTES 206 AND 306.	41		1 PER UNIT
RESERVED FOR FUTURE APPLICATIONS	42-45		

INFORMATION NOTES (CONT):

303.

RECORD OF FIGURES, WIRING AND APPARATUS CHANGES					
CHANGED ON ISSUE	IF JOB RECORDS DO NOT SPECIFY	THIS OPTION WAS FURN	SEE NOTE	USE IN CIRCUIT AVAIL	USE IN CIRCUIT DA
2M	J OR G	J		J OR G	
3M	F OR E	F	202	F OR E	

304.

CIRCUIT PACK CODE OR MICROCODE	COMMON LANGUAGE EQUIPMENT IDENTIFICATION CODE (CLEI)
AJT40B	E5PQ38UAXX
AJT41	E5PQ95QAXX
AJT5	E5PQ01BAXX
AJT5Q	E5PQ38TAXX
AJT6	E5PQ37CAXX
AJT7	E5PQ4ADAXX
MC5D045A3	E5MQ5QLAXX
MC5X242A1	E5MQ5QJAXX
MC5X251A1	E5MQABCAXX
MC5X254A1	E5MQAAUAXX
TN1048	E5PQ33LAXX
TN1058	E5PQ33MAXX
TN1535	E5PQ38WAXX
TN1561	E5PQ54CAXX
TN335C	E5PQ35DAXX
TN831	E5PQ36JAXX
TN832	E5PQ36KAXX
UN322	E5PQ54AAXX
494GB	PWPQ53VAXX
UN402	E5PQAASAXX

305. THE TERMINALS INDICATED BELOW ARE HIGH VOLTAGE (+320V) TERMINALS. THEY SHOULD BE SLEEVED AS FAR DOWN ON THE TERMINAL AS POSSIBLE AND THE SLEEVING CUT IN SUCH A MANNER THAT IT EXTENDS BEYOND THE END OF THE PIN BY APPROXIMATELY 1/8 INCH.

LOCATION	TERMINAL
* - 084	007 AND 107
* - 092	006,007,106, 107, AND 206
* - 100	006 AND 106
* - 108	006 AND 106
* - 116	006 AND 106
* - 124	006 AND 106
* - 132	006 AND 106
* - 140	006 AND 106
* - 148	006 AND 106
* - 156	006 AND 106
* - 164	006 AND 106
* - 172	006 AND 106

* - DENOTES LEVELS 04 AND 13.

INFORMATION NOTES (CONT):

306. THIS FEATURE/OPTION IS USED BY AT&T PHILIPS TELECOMMUNICATIONS (APT).

307. CIRCUIT PACK TN1058B MAY BE USED IN ANY EQL REQUIRING A TN1058 CIRCUIT PACK.

308. ONLY AFTER THE INSTALLED 5ESS SWITCH IS NOT CROSS-CONNECTED TO ANOTHER NON-5ESS SWITCH, (I.E., AFTER THE SWITCH IS CUT-OVER INTO SERVICE) CIRCUIT PACK TN1058 MAY BE USED IN ANY EQL REQUIRING A TN1058B CIRCUIT PACK.

309. VARIOUS CIRCUIT PACK CODES MAY BE USED AT THIS PARTICULAR EQUIPMENT LOCATION. REFER TO APPARATUS FIGURES FOR CIRCUIT PACK CODES USED IN SPECIFIC UNIT CONFIGURATIONS.

Copyright© 1986 AT&T
All Rights Reserved

LINE UNIT, MODEL 5

DWG SIZE: A4 | ISSUE: 3M

AT&T | SD-50180-01 | SHEET D3A

UNIT SYMBOL TABLE OF CONTENTS

FUNCTION	DESCRIPTION (LOWER LEFT PIN OF CONNECTOR)	SIZE	ELEMENT
TIP AND RING GRID 0	(04-099-000) TO MDF	2 X 12	AA
	(04-099-013) TO MDF	2 X 12	AB
	(04-099-032) TO MDF	2 X 12	AC
	(04-099-045) TO MDF	2 X 12	AD
	(04-107-000) TO MDF	2 X 12	AE
	(04-107-013) TO MDF	2 X 12	AF
	(04-107-032) TO MDF	2 X 12	AG
	(04-107-045) TO MDF	2 X 12	AH
TIP AND RING GRID 1	(13-099-000) TO MDF	2 X 12	AI
	(13-099-013) TO MDF	2 X 12	AJ
	(13-099-032) TO MDF	2 X 12	AK
	(13-099-045) TO MDF	2 X 12	AL
	(13-107-000) TO MDF	2 X 12	AM
	(13-107-013) TO MDF	2 X 12	AN
	(13-107-032) TO MDF	2 X 12	AO
	(13-107-045) TO MDF	2 X 12	AP
TIP AND RING GRID 2	(04-115-000) TO MDF	2 X 12	AQ
	(04-115-013) TO MDF	2 X 12	AR
	(04-115-032) TO MDF	2 X 12	AS
	(04-115-045) TO MDF	2 X 12	AT
	(04-123-000) TO MDF	2 X 12	AU
	(04-123-013) TO MDF	2 X 12	AV
	(04-123-032) TO MDF	2 X 12	AW
	(04-123-045) TO MDF	2 X 12	AX
TIP AND RING GRID 3	(13-115-000) TO MDF	2 X 12	AY
	(13-115-013) TO MDF	2 X 12	AZ
	(13-115-032) TO MDF	2 X 12	BA
	(13-115-045) TO MDF	2 X 12	BB
	(13-123-000) TO MDF	2 X 12	BC
	(13-123-013) TO MDF	2 X 12	BD
	(13-123-032) TO MDF	2 X 12	BE
	(13-123-045) TO MDF	2 X 12	BF
TIP AND RING GRID 4 SEE NOTE 207	(04-131-000) TO MDF	2 X 12	BG
	(04-131-013) TO MDF	2 X 12	BH
	(04-131-032) TO MDF	2 X 12	BI
	(04-131-045) TO MDF	2 X 12	BJ
	(04-139-000) TO MDF	2 X 12	BK
	(04-139-013) TO MDF	2 X 12	BL

UNIT SYMBOL TABLE OF CONTENTS

FUNCTION	DESCRIPTION (LOWER LEFT PIN OF CONNECTOR)	SIZE	ELEMENT
TIP AND RING GRID 4 SEE NOTE 207 (CONT)	(04-139-032) TO MDF	2 X 12	BM
	(04-139-045) TO MDF	2 X 12	BN
TIP AND RING GRID 5 SEE NOTE 207	(13-131-000) TO MDF	2 X 12	BO
	(13-131-013) TO MDF	2 X 12	BP
	(13-131-032) TO MDF	2 X 12	BQ
	(13-131-045) TO MDF	2 X 12	BR
	(13-139-000) TO MDF	2 X 12	BS
	(13-139-013) TO MDF	2 X 12	BT
	(13-139-032) TO MDF	2 X 12	BU
	(13-139-045) TO MDF	2 X 12	BV
TIP AND RING GRID 6 SEE NOTE 207	(04-147-000) TO MDF	2 X 12	BW
	(04-147-013) TO MDF	2 X 12	BX
	(04-147-032) TO MDF	2 X 12	BY
	(04-147-045) TO MDF	2 X 12	BZ
	(04-155-000) TO MDF	2 X 12	CA
	(04-155-013) TO MDF	2 X 12	CB
	(04-155-032) TO MDF	2 X 12	CC
	(04-155-045) TO MDF	2 X 12	CD
TIP AND RING GRID 7 SEE NOTE 207	(13-147-000) TO MDF	2 X 12	CE
	(13-147-013) TO MDF	2 X 12	CF
	(13-147-032) TO MDF	2 X 12	CG
	(13-147-045) TO MDF	2 X 12	CH
	(13-155-000) TO MDF	2 X 12	CI
	(13-155-013) TO MDF	2 X 12	CJ
	(13-155-032) TO MDF	2 X 12	CK
	(13-155-045) TO MDF	2 X 12	CL
TIP AND RING GRID 8 SEE NOTE 207	(04-163-000) TO MDF	2 X 12	CM
	(04-163-013) TO MDF	2 X 12	CN
	(04-163-032) TO MDF	2 X 12	CO
	(04-163-045) TO MDF	2 X 12	CP
	(04-171-000) TO MDF	2 X 12	CQ
	(04-171-013) TO MDF	2 X 12	CR
	(04-171-032) TO MDF	2 X 12	CS
	(04-171-045) TO MDF	2 X 12	CT

UNIT SYMBOL TABLE OF CONTENTS

FUNCTION	DESCRIPTION (LOWER LEFT PIN OF CONNECTOR)	SIZE	ELEMENT
TIP AND RING GRID 9 SEE NOTE 207	(13-163-000) TO MDF	2 X 12	CU
	(13-163-013) TO MDF	2 X 12	CV
	(13-163-032) TO MDF	2 X 12	CW
	(13-163-045) TO MDF	2 X 12	CX
	(13-171-000) TO MDF	2 X 12	CY
	(13-171-013) TO MDF	2 X 12	CZ
	(13-171-032) TO MDF	2 X 12	DA
	(13-171-045) TO MDF	2 X 12	DB
PICB CABLES SIDE 0	(04-074-147) TO SMP	2 X 6	DC
	(13-074-147) TO SMP	2 X 6	DD
PICB CABLES SIDE 1	(04-074-447) TO SMP	2 X 6	DE
	(13-074-447) TO SMP	2 X 6	DF
PIDB CABLES SIDE 0	(04-074-153) TO TSIU	2 X 4	DG
	(13-074-153) TO TSIU	2 X 4	DH
PIDB CABLES SIDE 1	(04-074-453) TO TSIU	2 X 4	DI
	(13-074-453) TO TSIU	2 X 4	DJ
MTB	(04-084-322) TO MDF	2 X 3	DK
	(13-084-322) TO MDF	2 X 3	DL

Copyright © 1987 AT&T
All Rights Reserved

LINE UNIT, MODEL 3

DWG SIZE: B

ISSUE: /

AT&T BELL LABORATORIES | SD-5D180-01 | SHEET: GBIA

UNIT SYMBOL TABLE OF CONTENTS

FUNCTION	DESCRIPTION (LOWER LEFT PIN OF CONNECTOR)	SIZE	ELEMENT
POWER LUGS	(01-022-080)	LUG	DN
	(01-064-080)	LUG	DN
	(01-108-180)	LUG	DN
	(01-124-180)	LUG	DN
	(01-145-080)	LUG	DN
	(01-156-180)	LUG	DN
	(01-169-080)	LUG	DN
	(10-022-080)	LUG	DN
	(10-064-080)	LUG	DN
	(10-108-180)	LUG	DN
	(10-124-180)	LUG	DN
	(10-145-080)	LUG	DN
	(10-156-180)	LUG	DN
	(10-169-080)	LUG	DN
GROUND LUGS	(01-014-080)	LUG	DN
	(01-057-080)	LUG	DN
	(01-105-080)	LUG	DN
	(01-121-080)	LUG	DN
	(01-129-080)	LUG	DN
	(01-193-080)	LUG	DN
	(01-164-280)	LUG	DN
	(10-014-080)	LUG	DN
	(10-057-080)	LUG	DN
	(10-105-080)	LUG	DN
	(10-121-080)	LUG	DN
	(10-129-080)	LUG	DN
	(10-193-080)	LUG	DN
	(10-164-280)	LUG	DN

Copyright © 1987 AT&T
All Rights Reserved

LINE UNIT, MODEL 5

DWG SIZE: 86

ISSUE: /

AT&T BELL LABORATORIES | SD-5D180-01 | SHEET: GSIB

CIRCUIT ACCESS REFERENCE DATA

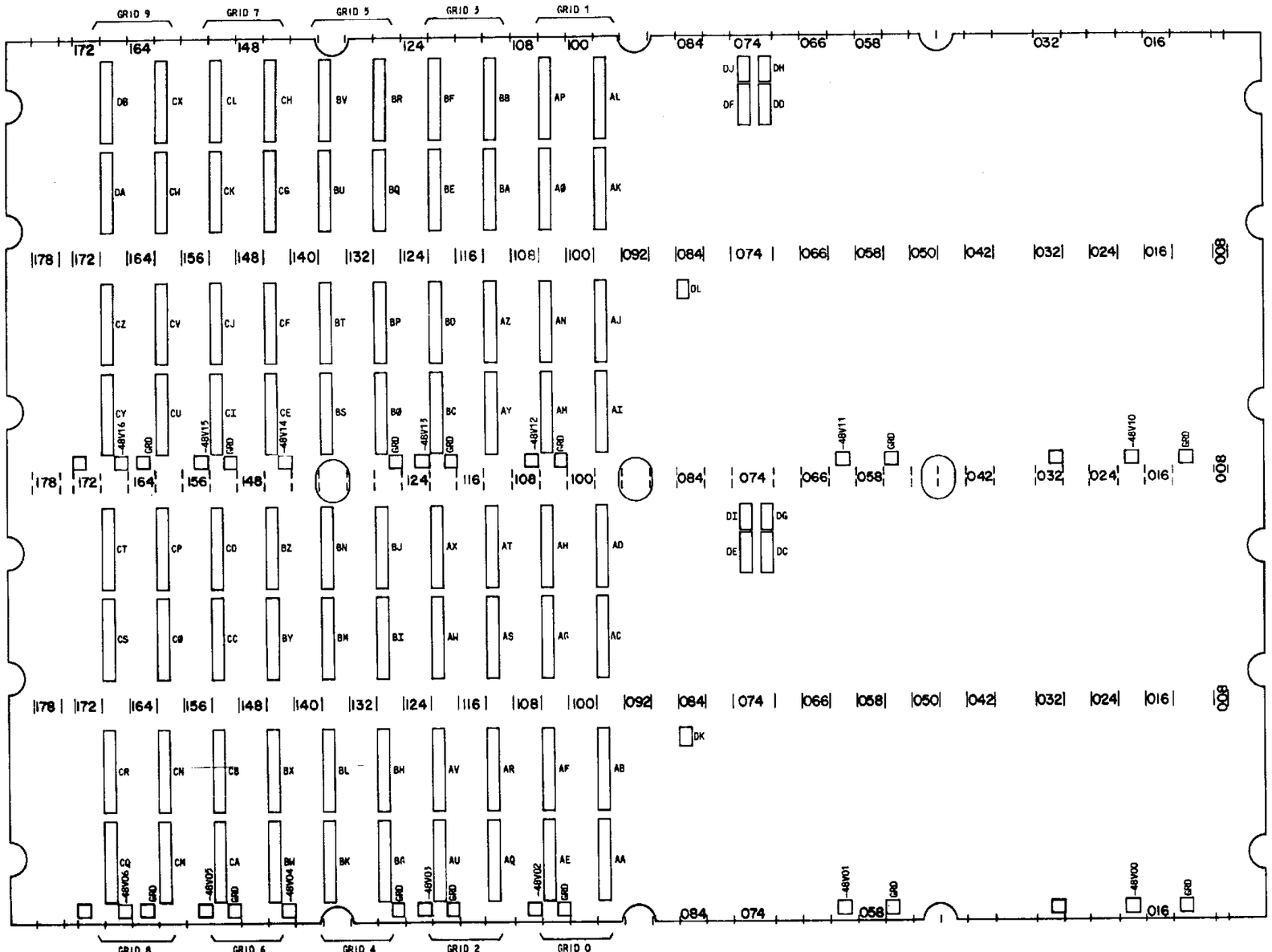

NOTES:

1. POWER LUGS ARE IN ELEMENT DN.
2. GROUND LUGS ARE IN ELEMENT DN.

FIG. 1

BACKPLANE PICTORIAL WIRING SIDE

Copyright © 1987 AT&T
All Rights Reserved

LINE UNIT, MODEL 5		DWG SIZE B	ISSUE /
AT&T BELL LABORATORIES	30-5D180-01		SHEET GBIC

CAD 1

UNIT SYMBOL

ELEMENT IDENTIFIER

AA

TERM. MODIFIER	FUNC	ACCESS TERM.	FS TERM.	LOC FS/SYM	NOTE
R0000	IO	04-098-002	04-098-002	1/12	
R0001	IO	04-098-003	04-098-003	1/12	
R0002	IO	04-098-004	04-098-004	1/12	
R0003	IO	04-098-005	04-098-005	1/12	
R0010	IO	04-098-006	04-098-006	1/12	
R0011	IO	04-098-007	04-098-007	1/12	
R0012	IO	04-098-008	04-098-008	1/12	
R0013	IO	04-098-009	04-098-009	1/12	
T0000	IO	04-099-002	04-099-002	1/13	
T0001	IO	04-099-003	04-099-003	1/13	
T0002	IO	04-099-004	04-099-004	1/13	
T0003	IO	04-099-005	04-099-005	1/13	
T0010	IO	04-099-006	04-099-006	1/13	
T0011	IO	04-099-007	04-099-007	1/13	
T0012	IO	04-099-008	04-099-008	1/13	
T0013	IO	04-099-009	04-099-009	1/13	

ELEMENT IDENTIFIER

AB

TERM. MODIFIER	FUNC	ACCESS TERM.	FS TERM.	LOC FS/SYM	NOTE
R0020	IO	04-098-015	04-098-015	1/12	
R0021	IO	04-098-016	04-098-016	1/12	
R0022	IO	04-098-017	04-098-017	1/12	
R0023	IO	04-098-018	04-098-018	1/12	
R0030	IO	04-098-019	04-098-019	1/12	
R0031	IO	04-098-020	04-098-020	1/12	
R0032	IO	04-098-021	04-098-021	1/12	
R0033	IO	04-098-022	04-098-022	1/12	
T0020	IO	04-099-015	04-099-015	1/13	
T0021	IO	04-099-016	04-099-016	1/13	
T0022	IO	04-099-017	04-099-017	1/13	
T0023	IO	04-099-018	04-099-018	1/13	
T0030	IO	04-099-019	04-099-019	1/13	
T0031	IO	04-099-020	04-099-020	1/13	
T0032	IO	04-099-021	04-099-021	1/13	
T0033	IO	04-099-022	04-099-022	1/13	

ELEMENT IDENTIFIER

AC

TERM. MODIFIER	FUNC	ACCESS TERM.	FS TERM.	LOC FS/SYM	NOTE
R0040	IO	04-098-034	04-098-034	1/12	
R0041	IO	04-098-035	04-098-035	1/12	
R0042	IO	04-098-036	04-098-036	1/12	
R0043	IO	04-098-037	04-098-037	1/12	
R0050	IO	04-098-038	04-098-038	1/12	
R0051	IO	04-098-039	04-098-039	1/12	
R0052	IO	04-098-040	04-098-040	1/12	
R0053	IO	04-098-041	04-098-041	1/12	
T0040	IO	04-099-034	04-099-034	1/13	
T0041	IO	04-099-035	04-099-035	1/13	
T0042	IO	04-099-036	04-099-036	1/13	
T0043	IO	04-099-037	04-099-037	1/13	
T0050	IO	04-099-038	04-099-038	1/13	
T0051	IO	04-099-039	04-099-039	1/13	
T0052	IO	04-099-040	04-099-040	1/13	
T0053	IO	04-099-041	04-099-041	1/13	

ELEMENT IDENTIFIER

AD

TERM. MODIFIER	FUNC	ACCESS TERM.	FS TERM.	LOC FS/SYM	NOTE
R0060	IO	04-098-047	04-098-047	1/12	
R0061	IO	04-098-048	04-098-048	1/12	
R0062	IO	04-098-049	04-098-049	1/12	
R0063	IO	04-098-050	04-098-050	1/12	
R0070	IO	04-098-051	04-098-051	1/12	
R0071	IO	04-098-052	04-098-052	1/12	
R0072	IO	04-098-053	04-098-053	1/12	
R0073	IO	04-098-054	04-098-054	1/12	
T0060	IO	04-099-047	04-099-047	1/13	
T0061	IO	04-099-048	04-099-048	1/13	
T0062	IO	04-099-049	04-099-049	1/13	
T0063	IO	04-099-050	04-099-050	1/13	
T0070	IO	04-099-051	04-099-051	1/13	
T0071	IO	04-099-052	04-099-052	1/13	
T0072	IO	04-099-053	04-099-053	1/13	
T0073	IO	04-099-054	04-099-054	1/13	

ELEMENT IDENTIFIER

AE

TERM. MODIFIER	FUNC	ACCESS TERM.	FS TERM.	LOC FS/SYM	NOTE
R0130	IO	04-106-002	04-106-002	1/15	
R0131	IO	04-106-003	04-106-003	1/15	
R0132	IO	04-106-004	04-106-004	1/15	
R0103	IO	04-106-005	04-106-005	1/15	
R0110	IO	04-106-006	04-106-006	1/15	
R0111	IO	04-106-007	04-106-007	1/15	
R0112	IO	04-106-008	04-106-008	1/15	
R0113	IO	04-106-009	04-106-009	1/15	
T0100	IO	04-107-002	04-107-002	1/16	
T0101	IO	04-107-003	04-107-003	1/16	
T0102	IO	04-107-004	04-107-004	1/16	
T0103	IO	04-107-005	04-107-005	1/16	
T0110	IO	04-107-006	04-107-006	1/16	
T0111	IO	04-107-007	04-107-007	1/16	
T0112	IO	04-107-008	04-107-008	1/16	
T0113	IO	04-107-009	04-107-009	1/16	

ELEMENT IDENTIFIER

AF

TERM. MODIFIER	FUNC	ACCESS TERM.	FS TERM.	LOC FS/SYM	NOTE
R0120	IO	04-106-015	04-106-015	1/15	
R0121	IO	04-106-016	04-106-016	1/15	
R0122	IO	04-106-017	04-106-017	1/15	
R0123	IO	04-106-018	04-106-018	1/15	
R0130	IO	04-106-019	04-106-019	1/15	
R0131	IO	04-106-020	04-106-020	1/15	
R0132	IO	04-106-021	04-106-021	1/15	
R0133	IO	04-106-022	04-106-022	1/15	
T0120	IO	04-107-015	04-107-015	1/16	
T0121	IO	04-107-016	04-107-016	1/16	
T0122	IO	04-107-017	04-107-017	1/16	
T0123	IO	04-107-018	04-107-018	1/16	
T0130	IO	04-107-019	04-107-019	1/16	
T0131	IO	04-107-020	04-107-020	1/16	
T0132	IO	04-107-021	04-107-021	1/16	
T0133	IO	04-107-022	04-107-022	1/16	

ELEMENT IDENTIFIER

AG

TERM. MODIFIER	FUNC	ACCESS TERM.	FS TERM.	LOC FS/SYM	NOTE
R0140	IO	04-106-034	04-106-034	1/15	
R0141	IO	04-106-035	04-106-035	1/15	
R0142	IO	04-106-036	04-106-036	1/15	
R0143	IO	04-106-037	04-106-037	1/15	
R0150	IO	04-106-038	04-106-038	1/15	
R0151	IO	04-106-039	04-106-039	1/15	
R0152	IO	04-106-040	04-106-040	1/15	
R0153	IO	04-106-041	04-106-041	1/15	
T0140	IO	04-107-034	04-107-034	1/16	
T0141	IO	04-107-035	04-107-035	1/16	
T0142	IO	04-107-036	04-107-036	1/16	
T0143	IO	04-107-037	04-107-037	1/16	
T0150	IO	04-107-038	04-107-038	1/16	
T0151	IO	04-107-039	04-107-039	1/16	
T0152	IO	04-107-040	04-107-040	1/16	
T0153	IO	04-107-041	04-107-041	1/16	

ELEMENT IDENTIFIER

AH

TERM. MODIFIER	FUNC	ACCESS TERM.	FS TERM.	LOC FS/SYM	NOTE
R0160	IO	04-106-047	04-106-047	1/15	
R0161	IO	04-106-048	04-106-048	1/15	
R0162	IO	04-106-049	04-106-049	1/15	
R0163	IO	04-106-050	04-106-050	1/15	
R0170	IO	04-106-051	04-106-051	1/15	
R0171	IO	04-106-052	04-106-052	1/15	
R0172	IO	04-106-053	04-106-053	1/15	
R0173	IO	04-106-054	04-106-054	1/15	
T0160	IO	04-107-047	04-107-047	1/16	
T0161	IO	04-107-048	04-107-048	1/16	
T0162	IO	04-107-049	04-107-049	1/16	
T0163	IO	04-107-050	04-107-050	1/16	
T0170	IO	04-107-051	04-107-051	1/16	
T0171	IO	04-107-052	04-107-052	1/16	
T0172	IO	04-107-053	04-107-053	1/16	
T0173	IO	04-107-054	04-107-054	1/16	

COPYRIGHT (c) 1987 AT&T
ALL RIGHTS RESERVED

LINE UNIT, MODEL 3

DWG SIZE: C2

ISSUE: 1

AT&T BELL LABORATORIES | SD-5D180-01 | GB2

PRINTED IN U.S.A.

CAD 1

UNIT SYMBOL

ELEMENT IDENTIFIER

AI

TERM. MODIFIER	FUNC	ACCESS TERM.	FS TERM.	LOC FS/SYM	NOTE
R1000	IO	13-098-002	13-098-002	2/12	
R1001	IO	13-098-003	13-098-003	2/12	
R1002	IO	13-098-004	13-098-004	2/12	
R1003	IO	13-098-005	13-098-005	2/12	
R1010	IO	13-098-006	13-098-006	2/12	
R1011	IO	13-098-007	13-098-007	2/12	
R1012	IO	13-098-008	13-098-008	2/12	
R1013	IO	13-098-009	13-098-009	2/12	
T1000	IO	13-099-002	13-099-002	2/13	
T1001	IO	13-099-003	13-099-003	2/13	
T1002	IO	13-099-004	13-099-004	2/13	
T1003	IO	13-099-005	13-099-005	2/13	
T1010	IO	13-099-006	13-099-006	2/13	
T1011	IO	13-099-007	13-099-007	2/13	
T1012	IO	13-099-008	13-099-008	2/13	
T1013	IO	13-099-009	13-099-009	2/13	

ELEMENT IDENTIFIER

AJ

TERM. MODIFIER	FUNC	ACCESS TERM.	FS TERM.	LOC FS/SYM	NOTE
R1020	IO	13-098-015	13-098-015	2/12	
R1021	IO	13-098-016	13-098-016	2/12	
R1022	IO	13-098-017	13-098-017	2/12	
R1023	IO	13-098-018	13-098-018	2/12	
R1030	IO	13-098-019	13-098-019	2/12	
R1031	IO	13-098-020	13-098-020	2/12	
R1032	IO	13-098-021	13-098-021	2/12	
R1033	IO	13-098-022	13-098-022	2/12	
T1020	IO	13-099-015	13-099-015	2/13	
T1021	IO	13-099-016	13-099-016	2/13	
T1022	IO	13-099-017	13-099-017	2/13	
T1023	IO	13-099-018	13-099-018	2/13	
T1030	IO	13-099-019	13-099-019	2/13	
T1031	IO	13-099-020	13-099-020	2/13	
T1032	IO	13-099-021	13-099-021	2/13	
T1033	IO	13-099-022	13-099-022	2/13	

ELEMENT IDENTIFIER

AK

TERM. MODIFIER	FUNC	ACCESS TERM.	FS TERM.	LOC FS/SYM	NOTE
R1040	IO	13-098-034	13-098-034	2/12	
R1041	IO	13-098-035	13-098-035	2/12	
R1042	IO	13-098-036	13-098-036	2/12	
R1043	IO	13-098-037	13-098-037	2/12	
R1050	IO	13-098-038	13-098-038	2/12	
R1051	IO	13-098-039	13-098-039	2/12	
R1052	IO	13-098-040	13-098-040	2/12	
R1053	IO	13-098-041	13-098-041	2/12	
T1040	IO	13-099-034	13-099-034	2/13	
T1041	IO	13-099-035	13-099-035	2/13	
T1042	IO	13-099-036	13-099-036	2/13	
T1043	IO	13-099-037	13-099-037	2/13	
T1050	IO	13-099-038	13-099-038	2/13	
T1051	IO	13-099-039	13-099-039	2/13	
T1052	IO	13-099-040	13-099-040	2/13	
T1053	IO	13-099-041	13-099-041	2/13	

ELEMENT IDENTIFIER

AL

TERM. MODIFIER	FUNC	ACCESS TERM.	FS TERM.	LOC FS/SYM	NOTE
R1060	IO	13-098-047	13-098-047	2/12	
R1061	IO	13-098-048	13-098-048	2/12	
R1062	IO	13-098-049	13-098-049	2/12	
R1063	IO	13-098-050	13-098-050	2/12	
R1070	IO	13-098-051	13-098-051	2/12	
R1071	IO	13-098-052	13-098-052	2/12	
R1072	IO	13-098-053	13-098-053	2/12	
R1073	IO	13-098-054	13-098-054	2/12	
T1060	IO	13-099-047	13-099-047	2/13	
T1061	IO	13-099-048	13-099-048	2/13	
T1062	IO	13-099-049	13-099-049	2/13	
T1063	IO	13-099-050	13-099-050	2/13	
T1070	IO	13-099-051	13-099-051	2/13	
T1071	IO	13-099-052	13-099-052	2/13	
T1072	IO	13-099-053	13-099-053	2/13	
T1073	IO	13-099-054	13-099-054	2/13	

ELEMENT IDENTIFIER

AM

TERM. MODIFIER	FUNC	ACCESS TERM.	FS TERM.	LOC FS/SYM	NOTE
R1100	IO	13-106-002	13-106-002	2/15	
R1101	IO	13-106-003	13-106-003	2/15	
R1102	IO	13-106-004	13-106-004	2/15	
R1103	IO	13-106-005	13-106-005	2/15	
R1110	IO	13-106-006	13-106-006	2/15	
R1111	IO	13-106-007	13-106-007	2/15	
R1112	IO	13-106-008	13-106-008	2/15	
R1113	IO	13-106-009	13-106-009	2/15	
T1100	IO	13-107-002	13-107-002	2/16	
T1101	IO	13-107-003	13-107-003	2/16	
T1102	IO	13-107-004	13-107-004	2/16	
T1103	IO	13-107-005	13-107-005	2/16	
T1110	IO	13-107-006	13-107-006	2/16	
T1111	IO	13-107-007	13-107-007	2/16	
T1112	IO	13-107-008	13-107-008	2/16	
T1113	IO	13-107-009	13-107-009	2/16	

ELEMENT IDENTIFIER

AN

TERM. MODIFIER	FUNC	ACCESS TERM.	FS TERM.	LOC FS/SYM	NOTE
R1120	IO	13-106-015	13-106-015	2/15	
R1121	IO	13-106-016	13-106-016	2/15	
R1122	IO	13-106-017	13-106-017	2/15	
R1123	IO	13-106-018	13-106-018	2/15	
R1130	IO	13-106-019	13-106-019	2/15	
R1131	IO	13-106-020	13-106-020	2/15	
R1132	IO	13-106-021	13-106-021	2/15	
R1133	IO	13-106-022	13-106-022	2/15	
T1120	IO	13-107-015	13-107-015	2/16	
T1121	IO	13-107-016	13-107-016	2/16	
T1122	IO	13-107-017	13-107-017	2/16	
T1123	IO	13-107-018	13-107-018	2/16	
T1130	IO	13-107-019	13-107-019	2/16	
T1131	IO	13-107-020	13-107-020	2/16	
T1132	IO	13-107-021	13-107-021	2/16	
T1133	IO	13-107-022	13-107-022	2/16	

ELEMENT IDENTIFIER

AO

TERM. MODIFIER	FUNC	ACCESS TERM.	FS TERM.	LOC FS/SYM	NOTE
R1140	IO	13-106-034	13-106-034	2/15	
R1141	IO	13-106-035	13-106-035	2/15	
R1142	IO	13-106-036	13-106-036	2/15	
R1143	IO	13-106-037	13-106-037	2/15	
R1150	IO	13-106-038	13-106-038	2/15	
R1151	IO	13-106-039	13-106-039	2/15	
R1152	IO	13-106-040	13-106-040	2/15	
R1153	IO	13-106-041	13-106-041	2/15	
T1140	IO	13-107-034	13-107-034	2/16	
T1141	IO	13-107-035	13-107-035	2/16	
T1142	IO	13-107-036	13-107-036	2/16	
T1143	IO	13-107-037	13-107-037	2/16	
T1150	IO	13-107-038	13-107-038	2/16	
T1151	IO	13-107-039	13-107-039	2/16	
T1152	IO	13-107-040	13-107-040	2/16	
T1153	IO	13-107-041	13-107-041	2/16	

ELEMENT IDENTIFIER

AP

TERM. MODIFIER	FUNC	ACCESS TERM.	FS TERM.	LOC FS/SYM	NOTE
R1160	IO	13-106-047	13-106-047	2/15	
R1161	IO	13-106-048	13-106-048	2/15	
R1162	IO	13-106-049	13-106-049	2/15	
R1163	IO	13-106-050	13-106-050	2/15	
R1170	IO	13-106-051	13-106-051	2/15	
R1171	IO	13-106-052	13-106-052	2/15	
R1172	IO	13-106-053	13-106-053	2/15	
R1173	IO	13-106-054	13-106-054	2/15	
T1160	IO	13-107-047	13-107-047	2/16	
T1161	IO	13-107-048	13-107-048	2/16	
T1162	IO	13-107-049	13-107-049	2/16	
T1163	IO	13-107-050	13-107-050	2/16	
T1170	IO	13-107-051	13-107-051	2/16	
T1171	IO	13-107-052	13-107-052	2/16	
T1172	IO	13-107-053	13-107-053	2/16	
T1173	IO	13-107-054	13-107-054	2/16	

COPYRIGHT (c) 1987 AT&T
ALL RIGHTS RESERVED

LINE UNIT, MODEL 3

DWG SIZE: D2

ISSUE: 1

AT&T BELL LABORATORIES

SD-5D180-01

GB3

CAD 1

UNIT SYMBOL

ELEMENT IDENTIFIER

AQ

TERM. MODIFIER	FUNC	ACCESS TERM.	FS TERM.	LOC FS/SYM	NOTE
R2000	IO	04-114-002	04-114-002	1/18	
R2001	IO	04-114-003	04-114-003	1/18	
R2002	IO	04-114-004	04-114-004	1/18	
R2003	IO	04-114-005	04-114-005	1/18	
R2010	IO	04-114-006	04-114-006	1/18	
R2011	IO	04-114-007	04-114-007	1/18	
R2012	IO	04-114-008	04-114-008	1/18	
R2013	IO	04-114-009	04-114-009	1/18	
T2000	IO	04-115-002	04-115-002	1/19	
T2001	IO	04-115-003	04-115-003	1/19	
T2002	IO	04-115-004	04-115-004	1/19	
T2003	IO	04-115-005	04-115-005	1/19	
T2010	IO	04-115-006	04-115-006	1/19	
T2011	IO	04-115-007	04-115-007	1/19	
T2012	IO	04-115-008	04-115-008	1/19	
T2013	IO	04-115-009	04-115-009	1/19	

ELEMENT IDENTIFIER

AR

TERM. MODIFIER	FUNC	ACCESS TERM.	FS TERM.	LOC FS/SYM	NOTE
R2020	IO	04-114-015	04-114-015	1/18	
R2021	IO	04-114-016	04-114-016	1/18	
R2022	IO	04-114-017	04-114-017	1/18	
R2023	IO	04-114-018	04-114-018	1/18	
R2030	IO	04-114-019	04-114-019	1/18	
R2031	IO	04-114-020	04-114-020	1/18	
R2032	IO	04-114-021	04-114-021	1/18	
R2033	IO	04-114-022	04-114-022	1/18	
T2020	IO	04-115-015	04-115-015	1/19	
T2021	IO	04-115-016	04-115-016	1/19	
T2022	IO	04-115-017	04-115-017	1/19	
T2023	IO	04-115-018	04-115-018	1/19	
T2030	IO	04-115-019	04-115-019	1/19	
T2031	IO	04-115-020	04-115-020	1/19	
T2032	IO	04-115-021	04-115-021	1/19	
T2033	IO	04-115-022	04-115-022	1/19	

ELEMENT IDENTIFIER

AS

TERM. MODIFIER	FUNC	ACCESS TERM.	FS TERM.	LOC FS/SYM	NOTE
R2040	IO	04-114-034	04-114-034	1/18	
R2041	IO	04-114-035	04-114-035	1/18	
R2042	IO	04-114-036	04-114-036	1/18	
R2043	IO	04-114-037	04-114-037	1/18	
R2050	IO	04-114-038	04-114-038	1/18	
R2051	IO	04-114-039	04-114-039	1/18	
R2052	IO	04-114-040	04-114-040	1/18	
R2053	IO	04-114-041	04-114-041	1/18	
T2040	IO	04-115-034	04-115-034	1/19	
T2041	IO	04-115-035	04-115-035	1/19	
T2042	IO	04-115-036	04-115-036	1/19	
T2043	IO	04-115-037	04-115-037	1/19	
T2050	IO	04-115-038	04-115-038	1/19	
T2051	IO	04-115-039	04-115-039	1/19	
T2052	IO	04-115-040	04-115-040	1/19	
T2053	IO	04-115-041	04-115-041	1/19	

ELEMENT IDENTIFIER

AT

TERM. MODIFIER	FUNC	ACCESS TERM.	FS TERM.	LOC FS/SYM	NOTE
R2060	IO	04-114-047	04-114-047	1/18	
R2061	IO	04-114-048	04-114-048	1/18	
R2062	IO	04-114-049	04-114-049	1/18	
R2063	IO	04-114-050	04-114-050	1/18	
R2070	IO	04-114-051	04-114-051	1/18	
R2071	IO	04-114-052	04-114-052	1/18	
R2072	IO	04-114-053	04-114-053	1/18	
R2073	IO	04-114-054	04-114-054	1/18	
T2060	IO	04-115-047	04-115-047	1/19	
T2061	IO	04-115-048	04-115-048	1/19	
T2062	IO	04-115-049	04-115-049	1/19	
T2063	IO	04-115-050	04-115-050	1/19	
T2070	IO	04-115-051	04-115-051	1/19	
T2071	IO	04-115-052	04-115-052	1/19	
T2072	IO	04-115-053	04-115-053	1/19	
T2073	IO	04-115-054	04-115-054	1/19	

ELEMENT IDENTIFIER

AU

TERM. MODIFIER	FUNC	ACCESS TERM.	FS TERM.	LOC FS/SYM	NOTE
R2100	IO	04-122-002	04-122-002	1/21	
R2101	IO	04-122-003	04-122-003	1/21	
R2102	IO	04-122-004	04-122-004	1/21	
R2103	IO	04-122-005	04-122-005	1/21	
R2110	IO	04-122-006	04-122-006	1/21	
R2111	IO	04-122-007	04-122-007	1/21	
R2112	IO	04-122-008	04-122-008	1/21	
R2113	IO	04-122-009	04-122-009	1/21	
T2100	IO	04-123-002	04-123-002	1/22	
T2101	IO	04-123-003	04-123-003	1/22	
T2102	IO	04-123-004	04-123-004	1/22	
T2103	IO	04-123-005	04-123-005	1/22	
T2110	IO	04-123-006	04-123-006	1/22	
T2111	IO	04-123-007	04-123-007	1/22	
T2112	IO	04-123-008	04-123-008	1/22	
T2113	IO	04-123-009	04-123-009	1/22	

ELEMENT IDENTIFIER

AV

TERM. MODIFIER	FUNC	ACCESS TERM.	FS TERM.	LOC FS/SYM	NOTE
R2120	IO	04-122-015	04-122-015	1/21	
R2121	IO	04-122-016	04-122-016	1/21	
R2122	IO	04-122-017	04-122-017	1/21	
R2123	IO	04-122-018	04-122-018	1/21	
R2130	IO	04-122-019	04-122-019	1/21	
R2131	IO	04-122-020	04-122-020	1/21	
R2132	IO	04-122-021	04-122-021	1/21	
R2133	IO	04-122-022	04-122-022	1/21	
T2120	IO	04-123-015	04-123-015	1/22	
T2121	IO	04-123-016	04-123-016	1/22	
T2122	IO	04-123-017	04-123-017	1/22	
T2123	IO	04-123-018	04-123-018	1/22	
T2130	IO	04-123-019	04-123-019	1/22	
T2131	IO	04-123-020	04-123-020	1/22	
T2132	IO	04-123-021	04-123-021	1/22	
T2133	IO	04-123-022	04-123-022	1/22	

ELEMENT IDENTIFIER

AW

TERM. MODIFIER	FUNC	ACCESS TERM.	FS TERM.	LOC FS/SYM	NOTE
R2140	IO	04-122-034	04-122-034	1/21	
R2141	IO	04-122-035	04-122-035	1/21	
R2142	IO	04-122-036	04-122-036	1/21	
R2143	IO	04-122-037	04-122-037	1/21	
R2150	IO	04-122-038	04-122-038	1/21	
R2151	IO	04-122-039	04-122-039	1/21	
R2152	IO	04-122-040	04-122-040	1/21	
R2153	IO	04-122-041	04-122-041	1/21	
T2140	IO	04-123-034	04-123-034	1/22	
T2141	IO	04-123-035	04-123-035	1/22	
T2142	IO	04-123-036	04-123-036	1/22	
T2143	IO	04-123-037	04-123-037	1/22	
T2150	IO	04-123-038	04-123-038	1/22	
T2151	IO	04-123-039	04-123-039	1/22	
T2152	IO	04-123-040	04-123-040	1/22	
T2153	IO	04-123-041	04-123-041	1/22	

ELEMENT IDENTIFIER

AX

TERM. MODIFIER	FUNC	ACCESS TERM.	FS TERM.	LOC FS/SYM	NOTE
R2160	IO	04-122-047	04-122-047	1/21	
R2161	IO	04-122-048	04-122-048	1/21	
R2162	IO	04-122-049	04-122-049	1/21	
R2163	IO	04-122-050	04-122-050	1/21	
R2170	IO	04-122-051	04-122-051	1/21	
R2171	IO	04-122-052	04-122-052	1/21	
R2172	IO	04-122-053	04-122-053	1/21	
R2173	IO	04-122-054	04-122-054	1/21	
T2160	IO	04-123-047	04-123-047	1/22	
T2161	IO	04-123-048	04-123-048	1/22	
T2162	IO	04-123-049	04-123-049	1/22	
T2163	IO	04-123-050	04-123-050	1/22	
T2170	IO	04-123-051	04-123-051	1/22	
T2171	IO	04-123-052	04-123-052	1/22	
T2172	IO	04-123-053	04-123-053	1/22	
T2173	IO	04-123-054	04-123-054	1/22	

COPYRIGHT (c) 1982 AT&T
ALL RIGHTS RESERVED

LINE UNIT, MODEL 3

DWG SIZE: D2

ISSUE: 1

AT&T BELL LABORATORIES

SD-5D180-01

GB4

CAD 1

UNIT SYMBOL

ELEMENT IDENTIFIER

AY

TERM. MODIFIER	FUNC	ACCESS TERM.	FS TERM.	LOC FS/SYM	NOTE
R3000	IO	13-114-002	13-114-002	2/18	
R3001	IO	13-114-003	13-114-003	2/18	
R3002	IO	13-114-004	13-114-004	2/18	
R3003	IO	13-114-005	13-114-005	2/18	
R3010	IO	13-114-006	13-114-006	2/18	
R3011	IO	13-114-007	13-114-007	2/18	
R3012	IO	13-114-008	13-114-008	2/18	
R3013	IO	13-114-009	13-114-009	2/18	
T3000	IO	13-115-002	13-115-002	2/19	
T3001	IO	13-115-003	13-115-003	2/19	
T3002	IO	13-115-004	13-115-004	2/19	
T3003	IO	13-115-005	13-115-005	2/19	
T3010	IO	13-115-006	13-115-006	2/19	
T3011	IO	13-115-007	13-115-007	2/19	
T3012	IO	13-115-008	13-115-008	2/19	
T3013	IO	13-115-009	13-115-009	2/19	

ELEMENT IDENTIFIER

AZ

TERM. MODIFIER	FUNC	ACCESS TERM.	FS TERM.	LOC FS/SYM	NOTE
R3020	IO	13-114-015	13-114-015	2/18	
R3021	IO	13-114-016	13-114-016	2/18	
R3022	IO	13-114-017	13-114-017	2/18	
R3023	IO	13-114-018	13-114-018	2/18	
R3030	IO	13-114-019	13-114-019	2/18	
R3031	IO	13-114-020	13-114-020	2/18	
R3032	IO	13-114-021	13-114-021	2/18	
R3033	IO	13-114-022	13-114-022	2/18	
T3020	IO	13-115-015	13-115-015	2/19	
T3021	IO	13-115-016	13-115-016	2/19	
T3022	IO	13-115-017	13-115-017	2/19	
T3023	IO	13-115-018	13-115-018	2/19	
T3030	IO	13-115-019	13-115-019	2/19	
T3031	IO	13-115-020	13-115-020	2/19	
T3032	IO	13-115-021	13-115-021	2/19	
T3033	IO	13-115-022	13-115-022	2/19	

ELEMENT IDENTIFIER

BA

TERM. MODIFIER	FUNC	ACCESS TERM.	FS TERM.	LOC FS/SYM	NOTE
R3040	IO	13-114-034	13-114-034	2/18	
R3041	IO	13-114-035	13-114-035	2/18	
R3042	IO	15-114-036	13-114-036	2/18	
R3043	IO	13-114-037	13-114-037	2/18	
R3050	IO	13-114-038	13-114-038	2/18	
R3051	IO	13-114-039	13-114-039	2/18	
R3052	IO	13-114-040	13-114-040	2/18	
R3053	IO	13-114-041	13-114-041	2/18	
T3040	IO	13-115-034	13-115-034	2/19	
T3041	IO	13-115-035	13-115-035	2/19	
T3042	IO	13-115-036	13-115-036	2/19	
T3043	IO	13-115-037	13-115-037	2/19	
T3050	IO	13-115-038	13-115-038	2/19	
T3051	IO	13-115-039	13-115-039	2/19	
T3052	IO	13-115-040	13-115-040	2/19	
T3053	IO	13-115-041	13-115-041	2/19	

ELEMENT IDENTIFIER

BB

TERM. MODIFIER	FUNC	ACCESS TERM.	FS TERM.	LOC FS/SYM	NOTE
R3060	IO	13-114-047	13-114-047	2/18	
R3061	IO	13-114-048	13-114-048	2/18	
R3062	IO	13-114-049	13-114-049	2/18	
R3063	IO	13-114-050	13-114-050	2/18	
R3070	IO	13-114-051	13-114-051	2/18	
R3071	IO	13-114-052	13-114-052	2/18	
R3072	IO	13-114-053	13-114-053	2/18	
R3073	IO	13-114-054	13-114-054	2/18	
T3060	IO	13-115-047	13-115-047	2/19	
T3061	IO	13-115-048	13-115-048	2/19	
T3062	IO	13-115-049	13-115-049	2/19	
T3063	IO	13-115-050	13-115-050	2/19	
T3070	IO	13-115-051	13-115-051	2/19	
T3071	IO	13-115-052	13-115-052	2/19	
T3072	IO	13-115-053	13-115-053	2/19	
T3073	IO	13-115-054	13-115-054	2/19	

ELEMENT IDENTIFIER

BC

TERM. MODIFIER	FUNC	ACCESS TERM.	FS TERM.	LOC FS/SYM	NOTE
R3100	IO	13-122-002	13-122-002	2/21	
R3101	IO	13-122-003	13-122-003	2/21	
R3102	IO	13-122-004	13-122-004	2/21	
R3103	IO	13-122-005	13-122-005	2/21	
R3110	IO	13-122-006	13-122-006	2/21	
R3111	IO	13-122-007	13-122-007	2/21	
R3112	IO	13-122-008	13-122-008	2/21	
R3113	IO	13-122-009	13-122-009	2/21	
T3100	IO	13-123-002	13-123-002	2/22	
T3101	IO	13-123-003	13-123-003	2/22	
T3102	IO	13-123-004	13-123-004	2/22	
T3103	IO	13-123-005	13-123-005	2/22	
T3110	IO	13-123-006	13-123-006	2/22	
T3111	IO	13-123-007	13-123-007	2/22	
T3112	IO	13-123-008	13-123-008	2/22	
T3113	IO	13-123-009	13-123-009	2/22	

ELEMENT IDENTIFIER

BD

TERM. MODIFIER	FUNC	ACCESS TERM.	FS TERM.	LOC FS/SYM	NOTE
R3120	IO	13-122-015	13-122-015	2/21	
R3121	IO	13-122-016	13-122-016	2/21	
R3122	IO	13-122-017	13-122-017	2/21	
R3123	IO	13-122-018	13-122-018	2/21	
R3130	IO	13-122-019	13-122-019	2/21	
R3131	IO	13-122-020	13-122-020	2/21	
R3132	IO	13-122-021	13-122-021	2/21	
R3133	IO	13-122-022	13-122-022	2/21	
T3120	IO	13-123-015	13-123-015	2/22	
T3121	IO	13-123-016	13-123-016	2/22	
T3122	IO	13-123-017	13-123-017	2/22	
T3123	IO	13-123-018	13-123-018	2/22	
T3130	IO	13-123-019	13-123-019	2/22	
T3131	IO	13-123-020	13-123-020	2/22	
T3132	IO	13-123-021	13-123-021	2/22	
T3133	IO	13-123-022	13-123-022	2/22	

ELEMENT IDENTIFIER

BE

TERM. MODIFIER	FUNC	ACCESS TERM.	FS TERM.	LOC FS/SYM	NOTE
R3140	IO	13-122-034	13-122-034	2/21	
R3141	IO	13-122-035	13-122-035	2/21	
R3142	IO	13-122-036	13-122-036	2/21	
R3143	IO	13-122-037	13-122-037	2/21	
R3150	IO	13-122-038	13-122-038	2/21	
R3151	IO	13-122-039	13-122-039	2/21	
R3152	IO	13-122-040	13-122-040	2/21	
R3153	IO	13-122-041	13-122-041	2/21	
T3140	IO	13-123-034	13-123-034	2/22	
T3141	IO	13-123-035	13-123-035	2/22	
T3142	IO	13-123-036	13-123-036	2/22	
T3143	IO	13-123-037	13-123-037	2/22	
T3150	IO	13-123-038	13-123-038	2/22	
T3151	IO	13-123-039	13-123-039	2/22	
T3152	IO	13-123-040	13-123-040	2/22	
T3153	IO	13-123-041	13-123-041	2/22	

ELEMENT IDENTIFIER

BF

TERM. MODIFIER	FUNC	ACCESS TERM.	FS TERM.	LOC FS/SYM	NOTE
R3160	IO	13-122-047	13-122-047	2/21	
R3161	IO	13-122-048	13-122-048	2/21	
R3162	IO	13-122-049	13-122-049	2/21	
R3163	IO	13-122-050	13-122-050	2/21	
R3170	IO	13-122-051	13-122-051	2/21	
R3171	IO	13-122-052	13-122-052	2/21	
R3172	IO	13-122-053	13-122-053	2/21	
R3173	IO	13-122-054	13-122-054	2/21	
T3160	IO	13-123-047	13-123-047	2/22	
T3161	IO	13-123-048	13-123-048	2/22	
T3162	IO	13-123-049	13-123-049	2/22	
T3163	IO	13-123-050	13-123-050	2/22	
T3170	IO	13-123-051	13-123-051	2/22	
T3171	IO	13-123-052	13-123-052	2/22	
T3172	IO	13-123-053	13-123-053	2/22	
T3173	IO	13-123-054	13-123-054	2/22	

COPYRIGHT (C) 1987 AT&T
ALL RIGHTS RESERVED

LINE UNIT, MODEL 3

DWG SIZE: C2

ISSUE: 1

AT&T BELL LABORATORIES

SD-5D180-01

GB5

CAD 1

UNIT SYMBOL

ELEMENT IDENTIFIER

BG

TERM. MODIFIER	FUNC	ACCESS TERM.	FS TERM.	LOC FS/SYM	NOTE
R4000	IO	04-130-002	04-130-002	1/24	
R4001	IO	04-130-003	04-130-003	1/24	
R4002	IO	04-130-004	04-130-004	1/24	
R4003	IO	04-130-005	04-130-005	1/24	
R4010	IO	04-130-006	04-130-006	1/24	
R4011	IO	04-130-007	04-130-007	1/24	
R4012	IO	04-130-008	04-130-008	1/24	
R4013	IO	04-130-009	04-130-009	1/24	
T4000	IO	04-131-002	04-131-002	1/25	
T4001	IO	04-131-003	04-131-003	1/25	
T4002	IO	04-131-004	04-131-004	1/25	
T4003	IO	04-131-005	04-131-005	1/25	
T4010	IO	04-131-006	04-131-006	1/25	
T4011	IO	04-131-007	04-131-007	1/25	
T4012	IO	04-131-008	04-131-008	1/25	
T4013	IO	04-131-009	04-131-009	1/25	

ELEMENT IDENTIFIER

BH

TERM. MODIFIER	FUNC	ACCESS TERM.	FS TERM.	LOC FS/SYM	NOTE
R4020	IO	04-130-015	04-130-015	1/24	
R4021	IO	04-130-016	04-130-016	1/24	
R4022	IO	04-130-017	04-130-017	1/24	
R4023	IO	04-130-018	04-130-018	1/24	
R4030	IO	04-130-019	04-130-019	1/24	
R4031	IO	04-130-020	04-130-020	1/24	
R4032	IO	04-130-021	04-130-021	1/24	
R4033	IO	04-130-022	04-130-022	1/24	
T4020	IO	04-131-015	04-131-015	1/25	
T4021	IO	04-131-016	04-131-016	1/25	
T4022	IO	04-131-017	04-131-017	1/25	
T4023	IO	04-131-018	04-131-018	1/25	
T4030	IO	04-131-019	04-131-019	1/25	
T4031	IO	04-131-020	04-131-020	1/25	
T4032	IO	04-131-021	04-131-021	1/25	
T4033	IO	04-131-022	04-131-022	1/25	

ELEMENT IDENTIFIER

BI

TERM. MODIFIER	FUNC	ACCESS TERM.	FS TERM.	LOC FS/SYM	NOTE
R4040	IO	04-130-034	04-130-034	1/24	
R4041	IO	04-130-035	04-130-035	1/24	
R4042	IO	04-130-036	04-130-036	1/24	
R4043	IO	04-130-037	04-130-037	1/24	
R4050	IO	04-130-038	04-130-038	1/24	
R4051	IO	04-130-039	04-130-039	1/24	
R4052	IO	04-130-040	04-130-040	1/24	
R4053	IO	04-130-041	04-130-041	1/24	
T4040	IO	04-131-034	04-131-034	1/25	
T4041	IO	04-131-035	04-131-035	1/25	
T4042	IO	04-131-036	04-131-036	1/25	
T4043	IO	04-131-037	04-131-037	1/25	
T4050	IO	04-131-038	04-131-038	1/25	
T4051	IO	04-131-039	04-131-039	1/25	
T4052	IO	04-131-040	04-131-040	1/25	
T4053	IO	04-131-041	04-131-041	1/25	

ELEMENT IDENTIFIER

BJ

TERM. MODIFIER	FUNC	ACCESS TERM.	FS TERM.	LOC FS/SYM	NOTE
R4060	IO	04-130-047	04-130-047	1/24	
R4061	IO	04-130-048	04-130-048	1/24	
R4062	IO	04-130-049	04-130-049	1/24	
R4063	IO	04-130-050	04-130-050	1/24	
R4070	IO	04-130-051	04-130-051	1/24	
R4071	IO	04-130-052	04-130-052	1/24	
R4072	IO	04-130-053	04-130-053	1/24	
R4073	IO	04-130-054	04-130-054	1/24	
T4060	IO	04-131-047	04-131-047	1/25	
T4061	IO	04-131-048	04-131-048	1/25	
T4062	IO	04-131-049	04-131-049	1/25	
T4063	IO	04-131-050	04-131-050	1/25	
T4070	IO	04-131-051	04-131-051	1/25	
T4071	IO	04 131-052	04-131-052	1/25	
T4072	IO	04-131-053	04-131-053	1/25	
T4073	IO	04-131-054	04-131-054	1/25	

ELEMENT IDENTIFIER

BK

TERM. MODIFIER	FUNC	ACCESS TERM.	FS TERM.	LOC FS/SYM	NOTE
R4100	IO	04-138-002	04-138-002	1/27	
R4101	IO	04-138-003	04-138-003	1/27	
R4102	IO	04-138-004	04-138-004	1/27	
R4103	IO	04-138-005	04-138-005	1/27	
R4110	IO	04-138-006	04-138-006	1/27	
R4111	IO	04 138-007	04-138-007	1/27	
R4112	IO	04 138-008	04-138-008	1/27	
R4113	IO	04-138-009	04-138-009	1/27	
T4100	IO	04-139-002	04-139-002	1/28	
T4101	IO	04-139-003	04-139-003	1/28	
T4102	IO	04-139-004	04-139-004	1/28	
T4103	IO	04-139-005	04-139-005	1/28	
T4110	IO	04-139-006	04-139-006	1/28	
T4111	IO	04-139-007	04-139-007	1/28	
T4112	IO	04-139-008	04-139-008	1/28	
T4113	IO	04-139-009	04-139-009	1/28	

ELEMENT IDENTIFIER

BL

TERM. MODIFIER	FUNC	ACCESS TERM.	FS TERM.	LOC FS/SYM	NOTE
R4120	IO	04-138-015	04-138-015	1/27	
R4121	IO	04-138-016	04-138-016	1/27	
R4122	IO	04-138-017	04-138-017	1/27	
R4123	IO	04-138-018	04-138-018	1/27	
R4130	IO	04-138-019	04-138-019	1/27	
R4131	IO	04-138-020	04-138-020	1/27	
R4132	IO	04-138-021	04-138-021	1/27	
R4133	IO	04-138-022	04-138-022	1/27	
T4120	IO	04-139-015	04-139-015	1/28	
T4121	IO	04-139-016	04-139-016	1/28	
T4122	IO	04-139-017	04-139-017	1/28	
T4123	IO	04-139-018	04-139-018	1/28	
T4130	IO	04-139-019	04-139-019	1/28	
T4131	IO	04-139-020	04-139-020	1/28	
T4132	IO	04-139-021	04-139-021	1/28	
T4133	IO	04-139-022	04-139-022	1/28	

ELEMENT IDENTIFIER

BM

TERM. MODIFIER	FUNC	ACCESS TERM.	FS TERM.	LOC FS/SYM	NOTE
R4140	IO	04-138-034	04-138-034	1/27	
R4141	IO	04-138-035	04-138-035	1/27	
R4142	IO	04-138-036	04-138-036	1/27	
R4143	IO	04-138-037	04-138-037	1/27	
R4150	IO	04-138-038	04-138-038	1/27	
R4151	IO	04-138-039	04-138-039	1/27	
R4152	IO	04-138-040	04-138-040	1/27	
R4153	IO	04-138-041	04-138-041	1/27	
T4140	IO	04-139-034	04-139-034	1/28	
T4141	IO	04-139-035	04-139-035	1/28	
T4142	IO	04-139-036	04-139-036	1/28	
T4143	IO	04-139-037	04-139-037	1/28	
T4150	IO	04-139-038	04-139-038	1/28	
T4151	IO	04-139-039	04-139-039	1/28	
T4152	IO	04-139-040	04-139-040	1/28	
T4153	IO	04-139-041	04-139-041	1/28	

ELEMENT IDENTIFIER

BN

TERM. MODIFIER	FUNC	ACCESS TERM.	FS TERM.	LOC FS/SYM	NOTE
R4160	IO	04-138-047	04-138-047	1/27	
R4161	IO	04-138-048	04-138-048	1/27	
R4162	IO	04-138-049	04-138-049	1/27	
R4163	IO	04-138-050	04-138-050	1/27	
R4170	IO	04-138-051	04-138-051	1/27	
R4171	IO	04-138-052	04-138-052	1/27	
R4172	IO	04-138-053	04-138-053	1/27	
R4173	IO	04-138-054	04-138-054	1/27	
T4160	IO	04-139-047	04-139-047	1/28	
T4161	IO	04-139-048	04-139-048	1/28	
T4162	IO	04-139-049	04-139-049	1/28	
T4163	IO	04-139-050	04-139-050	1/28	
T4170	IO	04-139-051	04-139-051	1/28	
T4171	IO	04-139-052	04-139-052	1/28	
T4172	IO	04-139-053	04-139-053	1/28	
T4173	IO	04-139-054	04-139-054	1/28	

COPYRIGHT (C) 1987 AT&T
ALL RIGHTS RESERVED

LINE UNIT, MODEL 3

DWG SIZE: C2

ISSUE: 1

AT&T BELL LABORATORIES

SD-5D180-01

GB6

CAD 1

UNIT SYMBOL

ELEMENT IDENTIFIER

BO

TERM. MODIFIER	FUNC	ACCESS TERM.	FS TERM.	LOC FS/SYM	NOTE
R5000	IO	13-130-002	13-130-002	2/24	
R5001	IO	13-130-003	13-130-003	2/24	
R5002	IO	13-130-004	13-130-004	2/24	
R5003	IO	13-130-005	13-130-005	2/24	
R5010	IO	13-130-006	13-130-006	2/24	
R5011	IO	13-130-007	13-130-007	2/24	
R5012	IO	13-130-008	13-130-008	2/24	
R5013	IO	13-130-009	13-130-009	2/24	
T5000	IO	13-131-002	13-131-002	2/25	
T5001	IO	13-131-003	13-131-003	2/25	
T5002	IO	13-131-004	13-131-004	2/25	
T5003	IO	13-131-005	13-131-005	2/25	
T5010	IO	13-131-006	13-131-006	2/25	
T5011	IO	13-131-007	13-131-007	2/25	
T5012	IO	13-131-008	13-131-008	2/25	
T5013	IO	13-131-009	13-131-009	2/25	

ELEMENT IDENTIFIER

BP

TERM. MODIFIER	FUNC	ACCESS TERM.	FS TERM.	LOC FS/SYM	NOTE
R5020	IO	13-130-015	13-130-015	2/24	
R5021	IO	13-130-016	13-130-016	2/24	
R5022	IO	13-130-017	13-130-017	2/24	
R5023	IO	13-130-018	13-130-018	2/24	
R5030	IO	13-130-019	13-130-019	2/24	
R5031	IO	13-130-020	13-130-020	2/24	
R5032	IO	13-130-021	13-130-021	2/24	
R5033	IO	13-130-022	13-130-022	2/24	
T5020	IO	13-131-015	13-131-015	2/25	
T5021	IO	13-131-016	13-131-016	2/25	
T5022	IO	13-131-017	13-131-017	2/25	
T5023	IO	13-131-018	13-131-018	2/25	
T5030	IO	13-131-019	13-131-019	2/25	
T5031	IO	13-131-020	13-131-020	2/25	
T5032	IO	13-131-021	13-131-021	2/25	
T5033	IO	13-131-022	13-131-022	2/25	

ELEMENT IDENTIFIER

BQ

TERM. MODIFIER	FUNC	ACCESS TERM.	FS TERM.	LOC FS/SYM	NOTE
R5040	IO	13-130-034	13-130-034	2/24	
R5041	IO	13-130-035	13-130-035	2/24	
R5042	IO	13-130-036	13-130-036	2/24	
R5043	IO	13-130-037	13-130-037	2/24	
R5050	IO	13-130-038	13-130-038	2/24	
R5051	IO	13-130-039	13-130-039	2/24	
R5052	IO	13-130-040	13-130-040	2/24	
R5053	IO	13-130-041	13-130-041	2/24	
T5040	IO	13-131-034	13-131-034	2/25	
T5041	IO	13-131-035	13-131-035	2/25	
T5042	IO	13-131-036	13-131-036	2/25	
T5043	IO	13-131-037	13-131-037	2/25	
T5050	IO	13-131-038	13-131-038	2/25	
T5051	IO	13-131-039	13-131-039	2/25	
T5052	IO	13-131-040	13-131-040	2/25	
T5053	IO	13-131-041	13-131-041	2/25	

ELEMENT IDENTIFIER

BR

TERM. MODIFIER	FUNC	ACCESS TERM.	FS TERM.	LOC FS/SYM	NOTE
R5060	IO	13-130-047	13-130-047	2/24	
R5061	IO	13-130-048	13-130-048	2/24	
R5062	IO	13-130-049	13-130-049	2/24	
R5063	IO	13-130-050	13-130-050	2/24	
R5070	IO	13-130-051	13-130-051	2/24	
R5071	IO	13-130-052	13-130-052	2/24	
R5072	IO	13-130-053	13-130-053	2/24	
R5073	IO	13-130-054	13-130-054	2/24	
T5060	IO	13-131-047	13-131-047	2/25	
T5061	IO	13-131-048	13-131-048	2/25	
T5062	IO	13-131-049	13-131-049	2/25	
T5063	IO	13-131-050	13-131-050	2/25	
T5070	IO	13-131-051	13-131-051	2/25	
T5071	IO	13-131-052	13-131-052	2/25	
T5072	IO	13-131-053	13-131-053	2/25	
T5073	IO	13-131-054	13-131-054	2/25	

ELEMENT IDENTIFIER

BS

TERM. MODIFIER	FUNC	ACCESS TERM.	FS TERM.	LOC FS/SYM	NOTE
R5100	IO	13-138-002	13-138-002	2/27	
R5101	IO	13-138-003	13-138-003	2/27	
R5102	IO	13-138-004	13-138-004	2/27	
R5103	IO	13-138-005	13-138-005	2/27	
R5110	IO	13-138-006	13-138-006	2/27	
R5111	IO	13-138-007	13-138-007	2/27	
R5112	IO	13-138-008	13-138-008	2/27	
R5113	IO	13-138-009	13-138-009	2/27	
T5100	IO	13-139-002	13-139-002	2/28	
T5101	IO	13-139-003	13-139-003	2/28	
T5102	IO	13-139-004	13-139-004	2/28	
T5103	IO	13-139-005	13-139-005	2/28	
T5110	IO	13-139-006	13-139-006	2/28	
T5111	IO	13-139-007	13-139-007	2/28	
T5112	IO	13-139-008	13-139-008	2/28	
T5113	IO	13-139-009	13-139-009	2/28	

ELEMENT IDENTIFIER

BT

TERM. MODIFIER	FUNC	ACCESS TERM.	FS TERM.	LOC FS/SYM	NOTE
R5120	IO	13-138-015	13-138-015	2/27	
R5121	IO	13-138-016	13-138-016	2/27	
R5122	IO	13-138-017	13-138-017	2/27	
R5123	IO	13-138-018	13-138-018	2/27	
R5130	IO	13-138-019	13-138-019	2/27	
R5131	IO	13-138-020	13-138-020	2/27	
R5132	IO	13-138-021	13-138-021	2/27	
R5133	IO	13-138-022	13-138-022	2/27	
T5120	IO	13-139-015	13-139-015	2/28	
T5121	IO	13-139-016	13-139-016	2/28	
T5122	IO	13-139-017	13-139-017	2/28	
T5123	IO	13-139-018	13-139-018	2/28	
T5130	IO	13-139-019	13-139-019	2/28	
T5131	IO	13-139-020	13-139-020	2/28	
T5132	IO	13-139-021	13-139-021	2/28	
T5133	IO	13-139-022	13-139-022	2/28	

ELEMENT IDENTIFIER

BU

TERM. MODIFIER	FUNC	ACCESS TERM.	FS TERM.	LOC FS/SYM	NOTE
R5140	IO	13-138-034	13-138-034	2/27	
R5141	IO	13-138-035	13-138-035	2/27	
R5142	IO	13-138-036	13-138-036	2/27	
R5143	IO	13-138-037	13-138-037	2/27	
R5150	IO	13-138-038	13-138-038	2/27	
R5151	IO	13-138-039	13-138-039	2/27	
R5152	IO	13-138-040	13-138-040	2/27	
R5153	IO	13-138-041	13-138-041	2/27	
T5140	IO	13-139-034	13-139-034	2/28	
T5141	IO	13-139-035	13-139-035	2/28	
T5142	IO	13-139-036	13-139-036	2/28	
T5143	IO	13-139-037	13-139-037	2/28	
T5150	IO	13-139-038	13-139-038	2/28	
T5151	IO	13-139-039	13-139-039	2/28	
T5152	IO	13-139-040	13-139-040	2/28	
T5153	IO	13-139-041	13-139-041	2/28	

ELEMENT IDENTIFIER

BV

TERM. MODIFIER	FUNC	ACCESS TERM.	FS TERM.	LOC FS/SYM	NOTE
R5160	IO	13-138-047	13-138-047	2/27	
R5161	IO	13-138-048	13-138-048	2/27	
R5162	IO	13-138-049	13-138-049	2/27	
R5163	IO	13-138-050	13-138-050	2/27	
R5170	IO	13-138-051	13-138-051	2/27	
R5171	IO	13-138-052	13-138-052	2/27	
R5172	IO	13-138-053	13-138-053	2/27	
R5173	IO	13-138-054	13-138-054	2/27	
T5160	IO	13-139-047	13-139-047	2/28	
T5161	IO	13-139-048	13-139-048	2/28	
T5162	IO	13-139-049	13-139-049	2/28	
T5163	IO	13-139-050	13-139-050	2/28	
T5170	IO	13-139-051	13-139-051	2/28	
T5171	IO	13-139-052	13-139-052	2/28	
T5172	IO	13-139-053	13-139-053	2/28	
T5173	IO	13-139-054	13-139-054	2/28	

COPYRIGHT (C) 1987 AT&T
ALL RIGHTS RESERVED

LINE UNIT, MODEL 3

DWG SIZE: C2

ISSUE: 1

AT&T BELL LABORATORIES

SD-5D180-01

GB7

CAD 1

UNIT SYMBOL

ELEMENT IDENTIFIER

BW

TERM. MODIFIER	FUNC	ACCESS TERM.	FS TERM.	LOC FS/SYM	NOTE
R6000	10	04-146-002	04-146-002	1/30	
R6001	10	04-146-003	04-146-003	1/30	
R6002	10	04-146-004	04-146-004	1/30	
R6003	10	04-146-005	04-146-005	1/30	
R6010	10	04-146-006	04-146-006	1/30	
R6011	10	04-146-007	04-146-007	1/30	
R6012	10	04-146-008	04-146-008	1/30	
R6013	10	04-146-009	04-146-009	1/30	
T6000	10	04-147-002	04-147-002	1/31	
T6001	10	04-147-003	04-147-003	1/31	
T6002	10	04-147-004	04-147-004	1/31	
T6003	10	04-147-005	04-147-005	1/31	
T6010	10	04-147-006	04-147-006	1/31	
T6011	10	04-147-007	04-147-007	1/31	
T6012	10	04-147-008	04-147-008	1/31	
T6013	10	04-147-009	04-147-009	1/31	

ELEMENT IDENTIFIER

BX

TERM. MODIFIER	FUNC	ACCESS TERM.	FS TERM.	LOC FS/SYM	NOTE
R6020	10	04-146-015	04-146-015	1/30	
R6021	10	04-146-016	04-146-016	1/30	
R6022	10	04-146-017	04-146-017	1/30	
R6023	10	04-146-018	04-146-018	1/30	
R6030	10	04-146-019	04-146-019	1/30	
R6031	10	04-146-020	04-146-020	1/30	
R6032	10	04-146-021	04-146-021	1/30	
R6033	10	04-146-022	04-146-022	1/30	
T6020	10	04-147-015	04-147-015	1/31	
T6021	10	04-147-016	04-147-016	1/31	
T6022	10	04-147-017	04-147-017	1/31	
T6023	10	04-147-018	04-147-018	1/31	
T6030	10	04-147-019	04-147-019	1/31	
T6031	10	04-147-020	04-147-020	1/31	
T6032	10	04-147-021	04-147-021	1/31	
T6033	10	04-147-022	04-147-022	1/31	

ELEMENT IDENTIFIER

BY

TERM. MODIFIER	FUNC	ACCESS TERM.	FS TERM.	LOC FS/SYM	NOTE
R6040	10	04-146-034	04-146-034	1/30	
R6041	10	04-146-035	04-146-035	1/30	
R6042	10	04-146-036	04-146-036	1/30	
R6043	10	04-146-037	04-146-037	1/30	
R6050	10	04-146-038	04-146-038	1/30	
R6051	10	04-146-039	04-146-039	1/30	
R6052	10	04-146-040	04-146-040	1/30	
R6053	10	04-146-041	04-146-041	1/30	
T6040	10	04-147-034	04-147-034	1/31	
T6041	10	04-147-035	04-147-035	1/31	
T6042	10	04-147-036	04-147-036	1/31	
T6043	10	04-147-037	04-147-037	1/31	
T6050	10	04-147-038	04-147-038	1/31	
T6051	10	04-147-039	04-147-039	1/31	
T6052	10	04-147-040	04-147-040	1/31	
T6053	10	04-147-041	04-147-041	1/31	

ELEMENT IDENTIFIER

BZ

TERM. MODIFIER	FUNC	ACCESS TERM.	FS TERM.	LOC FS/SYM	NOTE
R6060	10	04-146-047	04-146-047	1/30	
R6061	10	04-146-048	04-146-048	1/30	
R6062	10	04-146-049	04-146-049	1/30	
R6063	10	04-146-050	04-146-050	1/30	
R6070	10	04-146-051	04-146-051	1/30	
R6071	10	04-146-052	04-146-052	1/30	
R6072	10	04-146-053	04-146-053	1/30	
R6073	10	04-146-054	04-146-054	1/30	
T6060	10	04-147-047	04-147-047	1/31	
T6061	10	04-147-048	04-147-048	1/31	
T6062	10	04-147-049	04-147-049	1/31	
T6063	10	04-147-050	04-147-050	1/31	
T6070	10	04-147-051	04-147-051	1/31	
T6071	10	04-147-052	04-147-052	1/31	
T6072	10	04-147-053	04-147-053	1/31	
T6073	10	04-147-054	04-147-054	1/31	

ELEMENT IDENTIFIER

CA

TERM. MODIFIER	FUNC	ACCESS TERM.	FS TERM.	LOC FS/SYM	NOTE
R6100	10	04-154-002	04-154-002	1/33	
R6101	10	04-154-003	04-154-003	1/33	
R6102	10	04-154-004	04-154-004	1/33	
R6103	10	04-154-005	04-154-005	1/33	
R6110	10	04-154-006	04-154-006	1/33	
R6111	10	04-154-007	04-154-007	1/33	
R6112	10	04-154-008	04-154-008	1/33	
R6113	10	04-154-009	04-154-009	1/33	
T6100	10	04-155-002	04-155-002	1/34	
T6101	10	04-155-003	04-155-003	1/34	
T6102	10	04-155-004	04-155-004	1/34	
T6103	10	04-155-005	04-155-005	1/34	
T6110	10	04-155-006	04-155-006	1/34	
T6111	10	04-155-007	04-155-007	1/34	
T6112	10	04-155-008	04-155-008	1/34	
T6113	10	04-155-009	04-155-009	1/34	

ELEMENT IDENTIFIER

CB

TERM. MODIFIER	FUNC	ACCESS TERM.	FS TERM.	LOC FS/SYM	NOTE
R6120	10	04-154-015	04-154-015	1/33	
R6121	10	04-154-016	04-154-016	1/33	
R6122	10	04-154-017	04-154-017	1/33	
R6123	10	04-154-018	04-154-018	1/33	
R6130	10	04-154-019	04-154-019	1/33	
R6131	10	04-154-020	04-154-020	1/33	
R6132	10	04-154-021	04-154-021	1/33	
R6133	10	04-154-022	04-154-022	1/33	
T6120	10	04-155-015	04-155-015	1/34	
T6121	10	04-155-016	04-155-016	1/34	
T6122	10	04-155-017	04-155-017	1/34	
T6123	10	04-155-018	04-155-018	1/34	
T6130	10	04-155-019	04-155-019	1/34	
T6131	10	04-155-020	04-155-020	1/34	
T6132	10	04-155-021	04-155-021	1/34	
T6133	10	04-155-022	04-155-022	1/34	

ELEMENT IDENTIFIER

CC

TERM. MODIFIER	FUNC	ACCESS TERM.	FS TERM.	LOC FS/SYM	NOTE
R6140	10	04-154-034	04-154-034	1/33	
R6141	10	04-154-035	04-154-035	1/33	
R6142	10	04-154-036	04-154-036	1/33	
R6143	10	04-154-037	04-154-037	1/33	
R6150	10	04-154-038	04-154-038	1/33	
R6151	10	04-154-039	04-154-039	1/33	
R6152	10	04-154-040	04-154-040	1/33	
R6153	10	04-154-041	04-154-041	1/33	
T6140	10	04-155-034	04-155-034	1/34	
T6141	10	04-155-035	04-155-035	1/34	
T6142	10	04-155-036	04-155-036	1/34	
T6143	10	04-155-037	04-155-037	1/34	
T6150	10	04-155-038	04-155-038	1/34	
T6151	10	04-155-039	04-155-039	1/34	
T6152	10	04-155-040	04-155-040	1/34	
T6153	10	04-155-041	04-155-041	1/34	

ELEMENT IDENTIFIER

CD

TERM. MODIFIER	FUNC	ACCESS TERM.	FS TERM.	LOC FS/SYM	NOTE
R6160	10	04-154-047	04-154-047	1/33	
R6161	10	04-154-048	04-154-048	1/33	
R6162	10	04-154-049	04-154-049	1/33	
R6163	10	04-154-050	04-154-050	1/33	
R6170	10	04-154-051	04-154-051	1/33	
R6171	10	04-154-052	04-154-052	1/33	
R6172	10	04-154-053	04-154-053	1/33	
R6173	10	04-154-054	04-154-054	1/33	
T6160	10	04-155-047	04-155-047	1/34	
T6161	10	04-155-048	04-155-048	1/34	
T6162	10	04-155-049	04-155-049	1/34	
T6163	10	04-155-050	04-155-050	1/34	
T6170	10	04-155-051	04-155-051	1/34	
T6171	10	04-155-052	04-155-052	1/34	
T6172	10	04-155-053	04-155-053	1/34	
T6173	10	04-155-054	04-155-054	1/34	

COPYRIGHT (c) 1987 AT&T
ALL RIGHTS RESERVED

LINE UNIT, MODEL 3

DWG SIZE: IZ

ISSUE: 1

AT&T BELL LABORATORIES

SD-5D180-01

GB8

CAD 1
UNIT SYMBOL

ELEMENT IDENTIFIER
CE

TERM. MODIFIER	FUNC	ACCESS TERM.	FS TERM.	LOC FS/SYM	NOTE
R7000	IO	13-146-002	13-146-002	2/30	
R7001	IO	13-146-003	13-146-003	2/30	
R7002	IO	13-146-004	13-146-004	2/30	
R7003	IO	13-146-005	13-146-005	2/30	
R7010	IO	13-146-006	13-146-006	2/30	
R7011	IO	13-146-007	13-146-007	2/30	
R7012	IO	13-146-008	13-146-008	2/30	
R7013	IO	13-146-009	13-146-009	2/30	
T7000	IO	13-147-002	13-147-002	2/31	
T7001	IO	13-147-003	13-147-003	2/31	
T7002	IO	13-147-004	13-147-004	2/31	
T7003	IO	13-147-005	13-147-005	2/31	
T7010	IO	13-147-006	13-147-006	2/31	
T7011	IO	13-147-007	13-147-007	2/31	
T7012	IO	13-147-008	13-147-008	2/31	
T7013	IO	13-147-009	13-147-009	2/31	

ELEMENT IDENTIFIER
CF

TERM. MODIFIER	FUNC	ACCESS TERM.	FS TERM.	LOC FS/SYM	NOTE
R7020	IO	13-146-015	13-146-015	2/30	
R7021	IO	13-146-016	13-146-016	2/30	
R7022	IO	13-146-017	13-146-017	2/30	
R7023	IO	13-146-018	13-146-018	2/30	
R7030	IO	13-146-019	13-146-019	2/30	
R7031	IO	13-146-020	13-146-020	2/30	
R7032	IO	13-146-021	13-146-021	2/30	
R7033	IO	13-146-022	13-146-022	2/30	
T7020	IO	13-147-015	13-147-015	2/31	
T7021	IO	13-147-016	13-147-016	2/31	
T7022	IO	13-147-017	13-147-017	2/31	
T7023	IO	13-147-018	13-147-018	2/31	
T7030	IO	13-147-019	13-147-019	2/31	
T7031	IO	13-147-020	13-147-020	2/31	
T7032	IO	13-147-021	13-147-021	2/31	
T7033	IO	13-147-022	13-147-022	2/31	

ELEMENT IDENTIFIER
CG

TERM. MODIFIER	FUNC	ACCESS TERM.	FS TERM.	LOC FS/SYM	NOTE
R7040	IO	13-146-034	13-146-034	2/30	
R7041	IO	13-146-035	13-146-035	2/30	
R7042	IO	13-146-036	13-146 036	2/30	
R7043	IO	13-146-037	13-146-037	2/30	
R7050	IO	13-146-038	13-146-038	2/30	
R7051	IO	13-146-039	13-146-039	2/30	
R7052	IO	13-146-040	13-146-040	2/30	
R7053	IO	13-146-041	13-146-041	2/30	
T7040	IO	13-147-034	13-147-034	2/31	
T7041	IO	13-147-035	13-147-035	2/31	
T7042	IO	13-147-036	13-147-036	2/31	
T7043	IO	13-147-037	13-147-037	2/31	
T7050	IO	13-147-038	13-147-038	2/31	
T7051	IO	13-147-039	13-147-039	2/31	
T7052	IO	13-147-040	13-147-040	2/31	
T7053	IO	13-147-041	13-147-041	2/31	

ELEMENT IDENTIFIER
CH

TERM. MODIFIER	FUNC	ACCESS TERM.	FS TERM.	LOC FS/SYM	NOTE
R7060	IO	13-146-047	13-146-047	2/30	
R7061	IO	13-146-048	13-146-048	2/30	
R7062	IO	13-146-049	13-146-049	2/30	
R7063	IO	13-146-050	13-146-050	2/30	
R7070	IO	13-146-051	13-146-051	2/30	
R7071	IO	13-146-052	13-146-052	2/30	
R7072	IO	13-146-053	13-146-053	2/30	
R7073	IO	13-146-054	13-146-054	2/30	
T7060	IO	13-147-047	13-147-047	2/31	
T7061	IO	13-147-048	13-147-048	2/31	
T7062	IO	13-147-049	13-147-049	2/31	
T7063	IO	13-147-050	13-147-050	2/31	
T7070	IO	13-147-051	13-147-051	2/31	
T7071	IO	13-147-052	13-147-052	2/31	
T7072	IO	13-147-053	13-147-053	2/31	
T7073	IO	13-147-054	13-147-054	2/31	

ELEMENT IDENTIFIER
CI

TERM. MODIFIER	FUNC	ACCESS TERM.	FS TERM.	LOC FS/SYM	NOTE
R7100	IO	13-154-002	13-154-002	2/33	
R7101	IO	13-154-003	13-154-003	2/33	
R7102	IO	13-154-004	13-154-004	2/33	
R7103	IO	13-154-005	13-154-005	2/33	
R7110	IO	13-154-006	13-154-006	2/33	
R7111	IO	13-154-007	13-154-007	2/33	
R7112	IO	13-154-008	13-154-008	2/33	
R7113	IO	13-154-009	13-154-009	2/33	
T7100	IO	13-155-002	13-155-002	2/34	
T7101	IO	13-155-003	13-155-003	2/34	
T7102	IO	13-155-004	13-155-004	2/34	
T7103	IO	13-155-005	13-155-005	2/34	
T7110	IO	13-155-006	13-155-006	2/34	
T7111	IO	13-155-007	13-155-007	2/34	
T7112	IO	13-155-008	13-155-008	2/34	
T7113	IO	13-155-009	13-155-009	2/34	

ELEMENT IDENTIFIER
CJ

TERM. MODIFIER	FUNC	ACCESS TERM.	FS TERM.	LOC FS/SYM	NOTE
R7120	IO	13-154-015	13-154-015	2/33	
R7121	IO	13-154-016	13-154-016	2/33	
R7122	IO	13-154-017	13-154-017	2/33	
R7123	IO	13-154-018	13-154-018	2/33	
R7130	IO	13-154-019	13-154-019	2/33	
R7131	IO	13-154-020	13-154-020	2/33	
R7132	IO	13-154-021	13-154-021	2/33	
R7133	IO	13-154-022	13-154-022	2/33	
T7120	IO	13-155-015	13-155-015	2/34	
T7121	IO	13-155-016	13-155-016	2/34	
T7122	IO	13-155-017	13-155-017	2/34	
T7123	IO	13-155-018	13-155-018	2/34	
T7130	IO	13-155-019	13-155-019	2/34	
T7131	IO	13-155-020	13-155-020	2/34	
T7132	IO	13-155-021	13-155-021	2/34	
T7133	IO	13-155-022	13-155-022	2/34	

ELEMENT IDENTIFIER
CK

TERM. MODIFIER	FUNC	ACCESS TERM.	FS TERM.	LOC FS/SYM	NOTE
R7140	IO	13-154-034	13-154-034	2/33	
R7141	IO	13-154-035	13-154-035	2/33	
R7142	IO	13-154-036	13-154-036	2/33	
R7143	IO	13-154-037	13-154-037	2/33	
R7150	IO	13-154-038	13-154-038	2/33	
R7151	IO	13-154-039	13-154-039	2/33	
R7152	IO	13-154-040	13-154-040	2/33	
R7153	IO	13-154-041	13-154-041	2/33	
T7140	IO	13-155-034	13-155-034	2/34	
T7141	IO	13-155-035	13-155-035	2/34	
T7142	IO	13-155-036	13-155-036	2/34	
T7143	IO	13-155-037	13-155-037	2/34	
T7150	IO	13-155-038	13-155-038	2/34	
T7151	IO	13-155-039	13-155-039	2/34	
T7152	IO	13-155-040	13-155-040	2/34	
T7153	IO	13-155-041	13-155-041	2/34	

ELEMENT IDENTIFIER
CL

TERM. MODIFIER	FUNC	ACCESS TERM.	FS TERM.	LOC FS/SYM	NOTE
R7160	IO	13-154-047	13-154-047	2/33	
R7161	IO	13-154-048	13-154-048	2/33	
R7162	IO	13-154-049	13-154-049	2/33	
R7163	IO	13-154-050	13-154-050	2/33	
R7170	IO	13-154-051	13-154-051	2/33	
R7171	IO	13-154-052	13-154-052	2/33	
R7172	IO	13-154-053	13-154-053	2/33	
R7173	IO	13-154-054	13-154-054	2/33	
T7160	IO	13-155-047	13-155-047	2/34	
T7161	IO	13-155-048	13-155-048	2/34	
T7162	IO	13-155-049	13-155-049	2/34	
T7163	IO	13-155-050	13-155-050	2/34	
T7170	IO	13-155-051	13-155-051	2/34	
T7171	IO	13-155-052	13-155-052	2/34	
T7172	IO	13-155-053	13-155-053	2/34	
T7173	IO	13-155-054	13-155-054	2/34	

COPYRIGHT (c) 1987 AT&T
ALL RIGHTS RESERVED

LINE UNIT, MODEL 3

DWG SIZE: C2

ISSUE: 1

AT&T BELL LABORATORIES

SD-5D180-01

GB9

CAD 1

UNIT SYMBOL

ELEMENT IDENTIFIER

CM

TERM. MODIFIER	FUNC	ACCESS TERM.	FS TERM.	LOC FS/SYM	NOTE
R8000	IO	04-162-002	04-162-002	1/36	
R8001	IO	04-162-003	04-162-003	1/36	
R8002	IO	04-162-004	04-162-004	1/36	
R8003	IO	04-162-005	04-162-005	1/36	
R8010	IO	04-162-006	04-162-006	1/36	
R8011	IO	04-162-007	04-162-007	1/36	
R8012	IO	04-162-008	04-162-008	1/36	
R8013	IO	04-162-009	04-162-009	1/36	
T8000	IO	04-163-002	04-163-002	1/37	
T8001	IO	04-163-003	04-163-003	1/37	
T8002	IO	04-163-004	04-163-004	1/37	
T8003	IO	04-163-005	04-163-005	1/37	
T8010	IO	04-163-006	04-163-006	1/37	
T8011	IO	04-163-007	04-163-007	1/37	
T8012	IC	04-163-008	04-163-008	1/37	
T8013	IO	04-163-009	04-163-009	1/37	

ELEMENT IDENTIFIER

CN

TERM. MODIFIER	FUNC	ACCESS TERM.	FS TERM.	LOC FS/SYM	NOTE
R8020	IO	04-162-015	04-162-015	1/36	
R8021	IO	04-162-016	04-162-016	1/36	
R8022	IO	04-162-017	04-162-017	1/36	
R8023	IO	04-162-018	04-162-018	1/36	
R8030	IO	04-162-019	04-162-019	1/36	
R8031	IO	04-162-020	04-162-020	1/36	
R8032	IO	04-162-021	04-162-021	1/36	
R8033	IO	04-162-022	04-162-022	1/36	
T8020	IO	04-163-015	04-163-015	1/37	
T8021	IO	04-163-016	04-163-016	1/37	
T8022	IO	04-163-017	04-163-017	1/37	
T8023	IO	04-163-018	04-163-018	1/37	
T8030	IO	04-163-019	04-163-019	1/37	
T8031	IO	04-163-020	04-163-020	1/37	
T8032	IO	04-163-021	04-163-021	1/37	
T8033	IO	04-163-022	04-163-022	1/37	

ELEMENT IDENTIFIER

CO

TERM. MODIFIER	FUNC	ACCESS TERM.	FS TERM.	LOC FS/SYM	NOTE
R8040	IO	04-162-034	04-162-034	1/36	
R8041	IO	04-162-035	04-162-035	1/36	
R8042	IO	04-162-036	04-162-036	1/36	
R8043	IO	04-162-037	04-162-037	1/36	
R8050	IO	04-162-038	04-162-038	1/36	
R8051	IO	04-162-039	04-162-039	1/36	
R8052	IO	04-162-040	04-162-040	1/36	
R8053	IO	04-162-041	04-162-041	1/36	
T8040	IO	04-163-034	04-163-034	1/37	
T8041	IO	04-163-035	04-163-035	1/37	
T8042	IO	04-163-036	04-163-036	1/37	
T8043	IO	04-163-037	04-163-037	1/37	
T8050	IO	04-163-038	04-163-038	1/37	
T8051	IO	04-163-039	04-163-039	1/37	
T8052	IO	04-163-040	04-163-040	1/37	
T8053	IO	04-163-041	04-163-041	1/37	

ELEMENT IDENTIFIER

CP

TERM. MODIFIER	FUNC	ACCESS TERM.	FS TERM.	LOC FS/SYM	NOTE
R8060	IO	04-162-047	04-162-047	1/36	
R8061	IO	04-162-048	04-162-048	1/36	
R8062	IO	04-162-049	04-162-049	1/36	
R8063	IO	04-162-050	04-162-050	1/36	
R8070	IO	04-162-051	04-162-051	1/36	
R8071	IO	04-162-052	04-162-052	1/36	
R8072	IO	04-162-053	04-162-053	1/36	
R8073	IO	04-162-054	04-162-054	1/36	
T8060	IO	04-163-047	04-163-047	1/37	
T8061	IO	04-163-048	04-163-048	1/37	
T8062	IO	04-163-049	04-163-049	1/37	
T8063	IO	04-163-050	04-163-050	1/37	
T8070	IO	04-163-051	04-163-051	1/37	
T8071	IO	04-163-052	04-163-052	1/37	
T8072	IO	04-163-053	04-163-053	1/37	
T8073	IO	04-163-054	04-163-054	1/37	

ELEMENT IDENTIFIER

CO

TERM. MODIFIER	FUNC	ACCESS TERM.	FS TERM.	LOC FS/SYM	NOTE
R8100	IO	04-170-002	04-170-002	1/39	
R8101	IO	04-170-003	04-170-003	1/39	
R8102	IO	04-170-004	04-170-004	1/39	
R8103	IO	04-170-005	04-170-005	1/39	
R8110	IO	04-170-006	04-170-006	1/39	
R8111	IO	04-170-007	04-170-007	1/39	
R8112	IO	04-170-008	04-170-008	1/39	
R8113	IO	04-170-009	04-170-009	1/39	
T8100	IO	04-171-002	04-171-002	1/40	
T8101	IO	04-171-003	04-171-003	1/40	
T8102	IO	04-171-004	04-171-004	1/40	
T8103	IO	04-171-005	04-171-005	1/40	
T8110	IO	04-171-006	04-171-006	1/40	
T8111	IO	04-171-007	04-171-007	1/40	
T8112	IO	04-171-008	04-171-008	1/40	
T8113	IO	04-171-009	04-171-009	1/40	

ELEMENT IDENTIFIER

CR

TERM. MODIFIER	FUNC	ACCESS TERM.	FS TERM.	LOC FS/SYM	NOTE
R8120	IO	04-170-015	04-170-015	1/39	
R8121	IO	04-170-016	04-170-016	1/39	
R8122	IO	04-170-017	04-170-017	1/39	
R8123	IO	04-170-018	04-170-018	1/39	
R8130	IO	04-170-019	04-170-019	1/39	
R8131	IO	04-170-020	04-170-020	1/39	
R8132	IO	04-170-021	04-170-021	1/39	
R8133	IO	04-170-022	04-170-022	1/39	
T8120	IO	04-171-015	04-171-015	1/40	
T8121	IO	04-171-016	04-171-016	1/40	
T8122	IO	04-171-017	04-171-017	1/40	
T8123	IO	04-171-018	04-171-018	1/40	
T8130	IO	04-171-019	04-171-019	1/40	
T8131	IO	04-171-020	04-171-020	1/40	
T8132	IO	04-171-021	04-171-021	1/40	
T8133	IO	04-171-022	04-171-022	1/40	

ELEMENT IDENTIFIER

CS

TERM. MODIFIER	FUNC	ACCESS TERM.	FS TERM.	LOC FS/SYM	NOTE
R8140	IO	04-170-034	04-170-034	1/39	
R8141	IO	04-170-035	04-170-035	1/39	
R8142	IO	04-170-036	04-170-036	1/39	
R8143	IO	04-170-037	04-170-037	1/39	
R8150	IO	04-170-038	04-170-038	1/39	
R8151	IO	04-170-039	04-170-039	1/39	
R8152	IO	04-170-040	04-170-040	1/39	
R8153	IO	04-170-041	04-170-041	1/39	
T8140	IO	04-171-034	04-171-034	1/40	
T8141	IO	04-171-035	04-171-035	1/40	
T8142	IO	04-171-036	04-171-036	1/40	
T8143	IO	04-171-037	04-171-037	1/40	
T8150	IO	04-171-038	04-171-038	1/40	
T8151	IO	04-171-039	04-171-039	1/40	
T8152	IO	04-171-040	04-171-040	1/40	
T8153	IO	04-171-041	04-171-041	1/40	

ELEMENT IDENTIFIER

CT

TERM. MODIFIER	FUNC	ACCESS TERM.	FS TERM.	LOC FS/SYM	NOTE
R8160	IO	04-170-047	04-170-047	1/39	
R8161	IO	04-170-048	04-170-048	1/39	
R8162	IO	04-170-049	04-170-049	1/39	
R8163	IO	04-170-050	04-170-050	1/39	
R8170	IO	04-170-051	04-170-051	1/39	
R8171	IO	04-170-052	04-170-052	1/39	
R8172	IO	04-170-053	04-170-053	1/39	
R8173	IO	04-170-054	04-170-054	1/39	
T8160	IO	04-171-047	04-171-047	1/40	
T8161	IO	04-171-048	04-171-048	1/40	
T8162	IO	04-171-049	04-171-049	1/40	
T8163	IO	04-171-050	04-171-050	1/40	
T8170	IO	04-171-051	04-171-051	1/40	
T8171	IO	04-171-052	04-171-052	1/40	
T8172	IO	04-171-053	04-171-053	1/40	
T8173	IO	04-171-054	04-171-054	1/40	

COPYRIGHT (C) 1987 AT&T
ALL RIGHTS RESERVED

LINE UNIT, MODEL 3

DWG SIZE C2

ISSUE 1

AT&T BELL LABORATORIES

SD-5D180-01

GB10

PRINTED IN U.S.A.

CAD 1

UNIT SYMBOL

ELEMENT IDENTIFIER

CU

TERM. MODIFIER	FUNC	ACCESS TERM.	FS TERM.	LOC FS/SYM	NOTE
R9000	IO	13-162-002	13-162-002	2/36	
R9001	IO	13-162-003	13-162-003	2/36	
R9002	IO	13-162-004	13-162-004	2/36	
R9003	IO	13-162-005	13-162-005	2/36	
R9010	IO	13-162-006	13-162-006	2/36	
R9011	IO	13-162-007	13-162-007	2/36	
R9012	IO	13-162-008	13-162-008	2/36	
R9013	IO	13-162-009	13-162-009	2/36	
T9000	IO	13-163-002	13-163-002	2/37	
T9001	IO	13-163-003	13-163-003	2/37	
T9002	IO	13-163-004	13-163-004	2/37	
T9003	IO	13-163-005	13-163-005	2/37	
T9010	IO	13-163-006	13-163-006	2/37	
T9011	IO	13-163-007	13-163-007	2/37	
T9012	IO	13-163-008	13-163-008	2/37	
T9013	IO	13-163-009	13-163-009	2/37	

ELEMENT IDENTIFIER

CV

TERM. MODIFIER	FUNC	ACCESS TERM.	FS TERM.	LOC FS/SYM	NOTE
R9020	IO	13-162-015	13-162-015	2/36	
R9021	IO	13-162-016	13-162-016	2/36	
R9022	IO	13-162-017	13-162-017	2/36	
R9023	IO	13-162-018	13-162-018	2/36	
R9030	IO	13-162-019	13-162-019	2/36	
R9031	IO	13-162-020	13-162-020	2/36	
R9032	IO	13-162-021	13-162-021	2/36	
R9033	IO	13-162-022	13-162-022	2/36	
T9020	IO	13-163-015	13-163-015	2/37	
T9021	IO	13-163-016	13-163-016	2/37	
T9022	IO	13-163-017	13-163-017	2/37	
T9023	IO	13-163-018	13-163-018	2/37	
T9030	IO	13-163-019	13-163-019	2/37	
T9031	IO	13-163-020	13-163-020	2/37	
T9032	IO	13-163-021	13-163-021	2/37	
T9033	IO	13-163-022	13-163-022	2/37	

ELEMENT IDENTIFIER

CW

TERM. MODIFIER	FUNC	ACCESS TERM.	FS TERM.	LOC FS/SYM	NOTE
R9040	IO	13-162-034	13-162-034	2/36	
R9041	IO	13-162-035	13-162-035	2/36	
R9042	IO	13-162-036	13-162-036	2/36	
R9043	IO	13-162-037	13-162-037	2/36	
R9050	IO	13-162-038	13-162-038	2/36	
R9051	IO	13-162-039	13-162-039	2/36	
R9052	IO	13-162-040	13-162-040	2/36	
R9053	IO	13-162-041	13-162-041	2/36	
T9040	IO	13-163-034	13-163-034	2/37	
T9041	IO	13-163-035	13-163-035	2/37	
T9042	IO	13-163-036	13-163-036	2/37	
T9043	IO	13-163-037	13-163-037	2/37	
T9050	IO	13-163-038	13-163-038	2/37	
T9051	IO	13-163-039	13-163-039	2/37	
T9052	IO	13-163-040	13-163-040	2/37	
T9053	IO	13-163-041	13-163-041	2/37	

ELEMENT IDENTIFIER

CX

TERM. MODIFIER	FUNC	ACCESS TERM.	FS TERM.	LOC FS/SYM	NOTE
R9060	IO	13-162-047	13-162-047	2/36	
R9061	IO	13-162-048	13-162-048	2/36	
R9062	IO	13-162-049	13-162-049	2/36	
R9063	IO	13-162-050	13-162-050	2/36	
R9070	IO	13-162-051	13-162-051	2/36	
R9071	IO	13-162-052	13-162-052	2/36	
R9072	IO	13-162-053	13-162-053	2/36	
R9073	IO	13-162-054	13-162-054	2/36	
T9060	IO	13-163-047	13-163-047	2/37	
T9061	IO	13-163-048	13-163-048	2/37	
T9062	IO	13-163-049	13-163-049	2/37	
T9063	IO	13-163-050	13-163-050	2/37	
T9070	IO	13-163-051	13-163-051	2/37	
T9071	IO	13-163-052	13-163-052	2/37	
T9072	IO	13-163-053	13-163-053	2/37	
T9073	IO	13-163-054	13-163-054	2/37	

ELEMENT IDENTIFIER

CY

TERM. MODIFIER	FUNC	ACCESS TERM.	FS TERM.	LOC FS/SYM	NOTE
R9100	IO	13-170-002	13-170-002	2/39	
R9101	IO	13-170-003	13-170-003	2/39	
R9102	IO	13-170-004	13-170-004	2/39	
R9103	IO	13-170-005	13-170-005	2/39	
R9110	IO	13-170-006	13-170-006	2/39	
R9111	IO	13-170-007	13-170-007	2/39	
R9112	IO	13-170-008	13-170-008	2/39	
R9113	IO	13-170-009	13-170-009	2/39	
T9100	IO	13-171-002	13-171-002	2/40	
T9101	IO	13-171-003	13-171-003	2/40	
T9102	IO	13-171-004	13-171-004	2/40	
T9103	IO	13-171-005	13-171-005	2/40	
T9110	IO	13-171-006	13-171-006	2/40	
T9111	IO	13-171-007	13-171-007	2/40	
T9112	IO	13-171-008	13-171-008	2/40	
T9113	IO	13-171-009	13-171-009	2/40	

ELEMENT IDENTIFIER

CZ

TERM. MODIFIER	FUNC	ACCESS TERM.	FS TERM.	LOC FS/SYM	NOTE
R9120	IO	13-170-015	13-170-015	2/39	
R9121	IO	13-170-016	13-170-016	2/39	
R9122	IO	13-170-017	13-170-017	2/39	
R9123	IO	13-170-018	13-170-018	2/39	
R9130	IO	13-170-019	13-170-019	2/39	
R9131	IO	13-170-020	13-170-020	2/39	
R9132	IO	13-170-021	13-170-021	2/39	
R9133	IO	13-170-022	13-170-022	2/39	
T9120	IO	13-171-015	13-171-015	2/40	
T9121	IO	13-171-016	13-171-016	2/40	
T9122	IO	13-171-017	13-171-017	2/40	
T9123	IO	13-171-018	13-171-018	2/40	
T9130	IO	13-171-019	13-171-019	2/40	
T9131	IO	13-171-020	13-171-020	2/40	
T9132	IO	13-171-021	13-171-021	2/40	
T9133	IO	13-171-022	13-171-022	2/40	

ELEMENT IDENTIFIER

DA

TERM. MODIFIER	FUNC	ACCESS TERM.	FS TERM.	LOC FS/SYM	NOTE
R9140	IO	13-170-034	13-170-034	2/39	
R9141	IO	13-170-035	13-170-035	2/39	
R9142	IO	13-170-036	13-170-036	2/39	
R9143	IO	13-170-037	13-170-037	2/39	
R9150	IO	13-170-038	13-170-038	2/39	
R9151	IO	13-170-039	13-170-039	2/39	
R9152	IO	13-170-040	13-170-040	2/39	
R9153	IO	13-170-041	13-170-041	2/39	
T9140	IO	13-171-034	13-171-034	2/40	
T9141	IO	13-171-035	13-171-035	2/40	
T9142	IO	13-171-036	13-171-036	2/40	
T9143	IO	13-171-037	13-171-037	2/40	
T9150	IO	13-171-038	13-171-038	2/40	
T9151	IO	13-171-039	13-171-039	2/40	
T9152	IO	13-171-040	13-171-040	2/40	
T9153	IO	13-171-041	13-171-041	2/40	

ELEMENT IDENTIFIER

DB

TERM. MODIFIER	FUNC	ACCESS TERM.	FS TERM.	LOC FS/SYM	NOTE
R9160	IO	13-170-047	13-170-047	2/39	
R9161	IO	13-170-048	13-170-048	2/39	
R9162	IO	13-170-049	13-170-049	2/39	
R9163	IO	13-170-050	13-170-050	2/39	
R9170	IO	13-170-051	13-170-051	2/39	
R9171	IO	13-170-052	13-170-052	2/39	
R9172	IO	13-170-053	13-170-053	2/39	
R9173	IO	13-170-054	13-170-054	2/39	
T9160	IO	13-171-047	13-171-047	2/40	
T9161	IO	13-171-048	13-171-048	2/40	
T9162	IO	13-171-049	13-171-049	2/40	
T9163	IO	13-171-050	13-171-050	2/40	
T9170	IO	13-171-051	13-171-051	2/40	
T9171	IO	13-171-052	13-171-052	2/40	
T9172	IO	13-171-053	13-171-053	2/40	
T9173	IO	13-171-054	13-171-054	2/40	

COPYRIGHT (C) 1987 AT&T
ALL RIGHTS RESERVED

LINE UNIT, MODEL 3

DWG SIZE: D2

ISSUE: 1

AT&T BELL LABORATORIES

SD-5D180-01

GB11

PRINTED IN U.S.A.

CAD 1

UNIT SYMBOL

ELEMENT IDENTIFIER

DC

TERM. MODIFIER	FUNC	ACCESS TERM.	FS TERM.	LOC FS/SYM	NOTE
OCLKON	IO	04-074-050	04-074-050	1/9	
OCLKOP	IO	04-074-150	04-074-150	1/9	
OMSGON	IO	04-074-051	04-074-051	1/9	
OMSGOP	IO	04-074-151	04-074-151	1/9	
ONINTON	IO	04-074-048	04-074-048	1/9	
ONINTOP	IO	04-074-148	04-074-148	1/9	
ORPLYON	IO	04-074-052	04-074-052	1/9	
ORPLYOP	IO	04-074-152	04-074-152	1/9	
OSLCTON	IO	04-074-049	04-074-049	1/9	
OSLCTOP	IO	04-074-149	04-074-149	1/9	

ELEMENT IDENTIFIER

DD

TERM. MODIFIER	FUNC	ACCESS TERM.	FS TERM.	LOC FS/SYM	NOTE
1CLKON	IO	13-074-050	13-074-050	2/9	
1CLKOP	IO	13-074-150	13-074-150	2/9	
1MSGON	IO	13-074-051	13-074-051	2/9	
1MSGOP	IO	13-074-151	13-074-151	2/9	
1NINTON	IO	13-074-048	13-074-048	2/9	
1NINTOP	IO	13-074-148	13-074-148	2/9	
1RPLYON	IO	13-074-052	13-074-052	2/9	
1RPLYOP	IO	13-074-152	13-074-152	2/9	
1SLCTON	IO	13-074-049	13-074-049	2/9	
1SLCTOP	IO	13-074-149	13-074-149	2/9	

ELEMENT IDENTIFIER

DE

TERM. MODIFIER	FUNC	ACCESS TERM.	FS TERM.	LOC FS/SYM	NOTE
OCLK1N	IO	04-074-350	04-074-350	1/9	
OCLK1P	IO	04-074-450	04-074-450	1/9	
OMSG1N	IO	04-074-351	04-074-351	1/9	
OMSG1P	IO	04-074-451	04-074-451	1/9	
ONINT1N	IO	04-074-348	04-074-348	1/9	
ONINT1P	IO	04-074-448	04-074-448	1/9	
ORPLY1N	IO	04-074-352	04-074-352	1/9	
ORPLY1P	IO	04-074-452	04-074-452	1/9	
OSLCT1N	IO	04-074-349	04-074-349	1/9	
OSLCT1P	IO	04-074-449	04-074-449	1/9	

ELEMENT IDENTIFIER

DF

TERM. MODIFIER	FUNC	ACCESS TERM.	FS TERM.	LOC FS/SYM	NOTE
1CLK1N	IO	13-074-350	13-074-350	2/9	
1CLK1P	IO	13-074-450	13-074-450	2/9	
1MSG1N	IO	13-074-351	13-074-351	2/9	
1MSG1P	IO	13-074-451	13-074-451	2/9	
1NINT1N	IO	13-074-348	13-074-348	2/9	
1NINT1P	IO	13-074-448	13-074-448	2/9	
1RPLY1N	IO	13-074-352	13-074-352	2/9	
1RPLY1P	IO	13-074-452	13-074-452	2/9	
1SLCT1N	IO	13-074-349	13-074-349	2/9	
1SLCT1P	IO	13-074-449	13-074-449	2/9	

ELEMENT IDENTIFIER

DG

TERM. MODIFIER	FUNC	ACCESS TERM.	FS TERM.	LOC FS/SYM	NOTE
0DAINON	IO	04-074-153	04-074-153	1/9	
0DAINOP	IO	04-074-053	04-074-053	1/9	
0DAOTON	IO	04-074-154	04-074-154	1/9	
0DAOTOP	IO	04-074-054	04-074-054	1/9	
04MCK1ON	IO	04-074-156	04-074-156	1/9	
04MCK1OP	IO	04-074-056	04-074-056	1/9	
08KSNCON	IO	04-074-155	04-074-155	1/9	
08KSNCOP	IO	04-074-055	04-074-055	1/9	

ELEMENT IDENTIFIER

DH

TERM. MODIFIER	FUNC	ACCESS TERM.	FS TERM.	LOC FS/SYM	NOTE
1DAINON	IO	13-074-153	13-074-153	2/9	
1DAINOP	IO	13-074-053	13-074-053	2/9	
1DAOTON	IO	13-074-154	13-074-154	2/9	
1DAOTOP	IO	13-074-054	13-074-054	2/9	
14MCK1ON	IO	13-074-156	13-074-156	2/9	
14MCK1OP	IO	13-074-056	13-074-056	2/9	
18KSNCON	IO	13-074-155	13-074-155	2/9	
18KSNCOP	IO	13-074-055	13-074-055	2/9	

ELEMENT IDENTIFIER

DI

TERM. MODIFIER	FUNC	ACCESS TERM.	FS TERM.	LOC FS/SYM	NOTE
0DAIN1N	IO	04-074-453	04-074-453	1/9	
0DAIN1P	IO	04-074-353	04-074-353	1/9	
0DAOT1N	IO	04-074-454	04-074-454	1/9	
0DAOT1P	IO	04-074-354	04-074-354	1/9	
04MCK1IN	IO	04-074-456	04-074-456	1/9	
04MCK1IP	IO	04-074-356	04-074-356	1/9	
08KSNC1N	IO	04-074-455	04-074-455	1/9	
08KSNC1P	IO	04-074-355	04-074-355	1/9	

ELEMENT IDENTIFIER

DJ

TERM. MODIFIER	FUNC	ACCESS TERM.	FS TERM.	LOC FS/SYM	NOTE
1DAIN1N	IO	13-074-453	13-074-453	2/9	
1DAIN1P	IO	13-074-353	13-074-353	2/9	
1DAOT1N	IO	13-074-454	13-074-454	2/9	
1DAOT1P	IO	13-074-354	13-074-354	2/9	
14MCK1IN	IO	13-074-456	13-074-456	2/9	
14MCK1IP	IO	13-074-356	13-074-356	2/9	
18KSNC1N	IO	13-074-455	13-074-455	2/9	
18KSNC1P	IO	13-074-355	13-074-355	2/9	

ELEMENT IDENTIFIER

DK

TERM. MODIFIER	FUNC	ACCESS TERM.	FS TERM.	LOC FS/SYM	NOTE
0MTBR	IO	04-084-324	04-084-324	1/10	
0MTBT	IO	04-084-224	04-084-224	1/10	

ELEMENT IDENTIFIER

DL

TERM. MODIFIER	FUNC	ACCESS TERM.	FS TERM.	LOC FS/SYM	NOTE
1MTBR	IO	13-084-324	13-084-324	2/10	
1MTBT	IO	13-084-224	13-084-224	2/10	

ELEMENT IDENTIFIER

DM

TERM. MODIFIER	FUNC	ACCESS TERM.	FS TERM.	LOC FS/SYM	NOTE
-48V00	P	01-022-0B0	01-022-0B0	1/44	
-48V01	P	01-064-0B0	01-064-0B0	1/47	
-48V02	P	01-108-1B0	01-108-1B0	1/49	
-48V03	P	01-124-1B0	01-124-1B0	1/51	
-48V04	P	01-145-0B0	01-145-0B0	1/53	
-48V05	P	01-156-1B0	01-156-1B0	1/55	
-48V06	P	01-169-0B0	01-169-0B0	1/57	
-48V10	P	10-022-0B0	10-022-0B0	2/44	
-48V11	P	10-064-0B0	10-064-0B0	2/47	
-48V12	P	10-108-1B0	10-108-1B0	2/49	
-48V13	P	10-124-1B0	10-124-1B0	2/51	
-48V14	P	10-145-0B0	10-145-0B0	2/53	
-48V15	P	10-156-1B0	10-156-1B0	2/55	
-48V16	P	10-169-0B0	10-169-0B0	2/57	

ELEMENT IDENTIFIER

DN

TERM. MODIFIER	FUNC	ACCESS TERM.	FS TERM.	LOC FS/SYM	NOTE
GRDLUG	G	10-129-0B0	10-129-0B0	2/52	
GRDLUG	G	10-014-0B0	10-129-0B0	2/52	
GRDLUG	G	10-153-0B0	10-129-0B0	2/52	
GRDLUG	G	10-121-0B0	10-129-0B0	2/52	
GRDLUG	G	01-164-2B0	10-129-0B0	2/52	
GRDLUG	G	01-153-0B0	10-129-0B0	2/52	
GRDLUG	G	01-129-0B0	10-129-0B0	2/52	
GRDLUG	G	01-121-0B0	10-129-0B0	2/52	
GRDLUG	G	01-105-0B0	10-129-0B0	2/52	
GRDLUG	G	01-057-0B0	10-129-0B0	2/52	
GRDLUG	G	01-014-0B0	10-129-0B0	2/52	
GRDLUG	G	10-164-2B0	10-129-0B0	2/52	
GRDLUG	G	10-105-0B0	10-129-0B0	2/52	
GRDLUG	G	10-057-0B0	10-129-0B0	2/52	

COPYRIGHT (c) 1987 AT&T
ALL RIGHTS RESERVED

LINE UNIT, MODEL 3

DWG SIZE: D2

ISSUE: 1

AT&T BELL LABORATORIES

SD-5D180-01

GB12

PRINTED IN U.S.A.

BD 1

BLOCK DIAGRAM

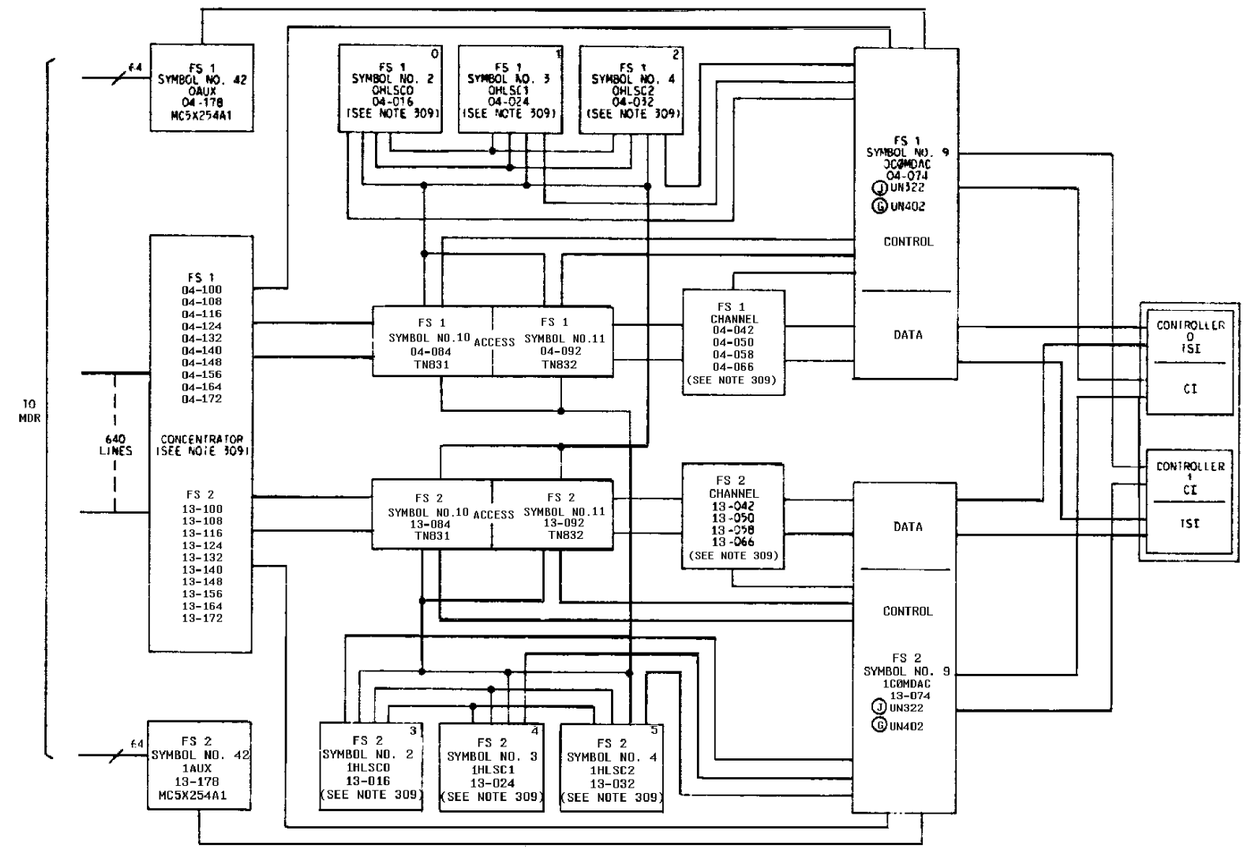

Copyright © 1987 AT&T
All Rights Reserved

LINE UNIT, MODEL 3

DWG SIZE: 8S

ISSUE: 2M

AT&T BELL LABORATORIES

SD-5D180-01

SHEET: H1