SHEET INDEX

CONTENTS	SHEET NO.	ISSUE NO. 41	42	43	44	45	46	47	48	49	50	51	52	53	54	55	56	57	58	59	60	61	62	63	64	65
SHEET INDEX SUPPORTING INFORMATION	A1	41	42	43	44	45	46	47	48	49	50	51	52	53												
SHEET INDEX (CONT)	A2	41	42	43	44	45	46	47	48	49	50	51	52	53												
SHEET INDEX (CONT)	A3	41	42	43	44	45	46	47	48	49	50	51	52	53												
APPARATUS INDEX	A4	41	41	41	41	41	46	46	48	48	48	48	48	48												
APPARATUS INDEX (CONT) LEAD INDEX	A5	41	41	43	44	44	46	46	48	48	50	51	51	51												
LEAD INDEX (CONT)	A6	40	40	40	40	45	46	47	47	47	47	47	47	47												
OPTION INDEX	A7	41	42	43	44	45	46	46	48	48	50	51	51	53												
FS 1 STATION LINE	B1	37	37	43	44	44	46	46	46	46	46	46	46	46												
PART OF FS 2 TENS SELECTION	B2	26	26	26	26	45	45	45	45	50	50	50	50	50												
PART OF FS 2 TENS SELECTION FS 3 TENS PREFERENCE CHAIN	B3	37	37	37	37	37	37	37	37	37	37	37	37	37												
FS 4 TENS CONNECTOR	B4	37	37	37	37	37	37	37	37	37	37	37	37	37												
	B5A	41	41	41	41	41	46	46	46	46	46	46	46	53												
	B5B						46	46	48	48	48	48	48	48												
FS 5 UNITS SELECTION	B6	36	36	36	36	36	46	46	48	48	48	48	48	48												
	B7	32	32	32	32	32	46	46	48	48	48	48	48	48												
	B8A	37	37	37	37	37	46	46	48	48	48	48	48	53												
	B8B						46	46	48	48	48	48	48	48												
PART OF FS 6 LINE AND TRUNK HUNTING	B9	36	36	36	36	36	46	36	36	36	50	50	50	50												
PART OF FS 6 LINE AND TRUNK HUNTING	B10	33	33	33	33	33	33	33	33	33	33	33	33	33												
PART OF FS 6 LINE AND TRUNK HUNTING	B11	33	33	33	33	33	33	33	33	33	33	33	33	33												
PART OF FS 6 LINE AND TRUNK HUNTING	B12	41	41	41	41	41	41	41	41	41	41	41	41	41												
FS 7 JUNCTOR REGISTER RELAYS	B13	3	3	3	3	3	46	46	46	46	46	46	46	46												
FS 8 SEQUENCE CONTROL	B14	41	41	43	43	43	43	43	43	43	43	43	43	43												
PART OF FS 9 ROUTE CONTROL	B15	41	41	43	43	43	43	43	43	43	43	43	43	43												
PART OF FS 9 ROUTE CONTROL	B16	41	41	41	41	41	41	41	41	41	41	41	41	41												
FS 10 REGISTER CONTROL	B17	41	41	43	43	43	43	43	43	43	43	43	43	43												
PART OF FS 11 CLASS OF SERVICE	B18	38	38	38	38	38	38	38	38	38	38	38	38	38												
PART OF FS 11 CLASS OF SERVICE	B19	38	38	43	43	43	43	43	43	43	43	43	43	43												
PART OF FS 12 LINK TEST	B20	33	33	33	33	33	33	33	33	33	33	33	33	33												
PART OF FS 12 LINK TEST	B21	33	33	33	33	33	33	33	33	33	33	33	33	33												
PART OF FS 12 LINK TEST	B22	33	33	33	33	33	33	33	33	33	33	33	33	33												
PART OF FS 12 LINK TEST PART OF FS 13 SELECT MAGNET CONTROL	B23	41	41	41	41	41	46	46	46	46	46	46	46	46												
PART OF FS 13 SELECT MAGNET CONTROL	B24	33	33	33	33	33	33	33	33	33	33	33	33	33												
FS 14 ADVANCE, TIMEOUT AND RELEASE	B25A	41	42	42	42	42	42	42	42	42	42	42	42	42												
	B25B	41	41	41	41	41	41	41	41	41	41	41	41	41												
FS 15 DOWN CHECK FS 16 TIME-OUT CHECK	B26	41	41	41	41	41	41	41	41	41	41	41	41	41												
PART OF FS 17 LINKS	B27	23	23	23	23	23	23	23	23	23	23	23	23	23												
PART OF FS 17 LINKS	B28	16	16	16	16	16	16	16	16	16	16	16	16	16												
FS 18 UNITS ALARM	B29	33	33	33	33	33	33	33	33	33	33	33	33	33												
FS 19 RELEASE ALARM	B30	33	33	33	33	33	33	33	33	33	33	33	33	33												
FS 20 TENS ALARM	B31	37	37	37	37	37	37	37	37	37	37	37	37	37												
FS 21 LINK TEST ALARM	B32	37	37	37	37	37	37	37	37	37	37	37	37	37												
FS 22 TIME-OUT ALARM AND ALARM CONTROL FS 23 ALARM LAMPS	B33	40	40	40	40	40	40	40	40	40	40	40	40	40												
FS 24 TRAFFIC REGISTER CONTROL FS 25 TRUNK AND HOLD MAGNETS	B34	40	40	40	40	40	40	40	40	40	40	40	40	40												
FS 26 LINE CIRCUIT FOR STATION LINES OR TRUNKS	B35	40	40	40	44	44	46	47	48	48	48	48	48	48												
FS 27 PAD CONTROL CIRCUIT FOR CONTROLLING THE SWITCH PAD OF CODE 8 TIE TRUNKS	B36	31	31	31	31	31	31	31	31	31	31	31	31	31												
	B37	34	34	34	34	34	34	34	34	34	34	34	34	34												
FS 28 LINK TEST	B38	40	40	40	40	40	40	40	40	40	40	51	51	51												
	B39	40	40	40	40	40	40	40	40	40	40	51	51	51												
	B40	33	33	33	33	33	33	33	33	33	33	33	33	33												
APP FIG. 1	C1	37	37	37	37	37	46	46	46	46	46	46	46	53												
APP FIG. 2,3	C2	37	37	37	44	44	46	46	46	46	46	46	46	46												
APP FIG. 4	C3A	41	41	41	41	41	46	46	48	48	48	48	48	53												
	C3B						46	46	48	48	48	48	48	48												
APP FIG.5	C4	37	37	37	37	45	46	46	46	46	46	46	46	46												
APP FIG.6 PART OF APP FIG.7	C5	41	41	41	41	41	46	46	46	46	46	46	46	46												
PART OF APP FIG.7	C6	41	41	43	43	43	46	46	48	48	48	48	48	48												
APP FIG.8	C7	41	42	43	43	43	46	46	46	46	50	50	50	50												
APP FIG.9 (MFR DISC)	C8	39	39	43	43	43	43	43	43	43	43	43	43	43												
APP FIG.10	C9	41	41	41	41	41	46	46	46	46	46	46	46	46												
APP FIG.11,12,13,14	C10	40	40	40	40	40	40	40	40	40	40	40	40	40												
APP FIG.15,16,17	C11	35	35	35	35	35	35	35	35	35	35	35	35	35												
APP FIG.19,20,21	C12	30	30	30	30	30	30	30	30	30	30	30	30	30												
APP FIG.22	C13	39	39	39	39	39	39	39	39	39	39	51	51	51												

SHEET INDEX NOTES

1. WHEN CHANGES ARE MADE IN THIS DRAWING, ONLY THOSE SHEETS AFFECTED WILL BE REISSUED.
2. THIS SHEET INDEX WILL BE REISSUED AND BROUGHT UP TO DATE EACH TIME ANY SHEET OF THE DRAWING IS REISSUED, OR A NEW SHEET IS ADDED.
3. THE ISSUE NUMBER ASSIGNED TO A CHANGED OR NEW SHEET WILL BE THE SAME ISSUE NUMBER AS THAT OF THE SHEET INDEX.
4. SHEETS THAT ARE NOT CHANGED WILL RETAIN THEIR EXISTING ISSUE NUMBER.
5. THE LAST ISSUE NUMBER OF THE SHEET INDEX IS RECOGNIZED AS THE LATEST ISSUE NUMBER OF THE DRAWING AS A WHOLE.

SUPPORTING INFORMATION

CATEGORY	NO.
PBX CABLING DIAGRAM	SD-65746-01
756A FEATURE CABLE	SD-66920-01
EQUIPMENT INFORMATION	J58829H-( )
	J58829AP( )
	J58829AR
	J58829AS( )
VOLTAGE REDUCTION DETECTOR	ED-5E009-( )
	SD-5E037-01
SERVICE OPTIONS BSP	551-147-210
CIRCUIT TEST BSP	551-170-501
RELAY DELAY TIMER	SD-99361-01
	ED-99514-( )

PWB ISS	CD ISSUE	DATE ISSUED	DRAWN	APPD
41B	8D APP 1B	8-7-70	ASI —	SHA SGS AFR
42B	8D APP 2B	8-7-70	ASI —	SHA SGS AFR
43B	8D APP 3B	6-9-71	ASI JBS	SHA RPW AFR
44C	8D APP 4C	8/9/71	RPW CWF	SHA RPW AFR
45D	8D APP 5D	8/9/71	RPW CWF	SHA RPW AFR
46D	9D	3-27-72	LFS HBW	SHA RPW AFR
47D	9D APP 1D	6-19-72	HBW —	WHS RPW AFR
48B	9D APP 2B	11-7-72	GDI HBW	TEN RPW AFR
49A	9D APP 3A	12-6-72	AHS —	WHS RPW AFR
50B	9D APP 4B	6-7-73	DLP AHS	TEN RWL AFR
51B	9D APP 5B	10-8-73	RPW —	TEN RWL AFR
52D	9D APPX 8D	2-26-74	GDI CBM	WHS KWL AFR
53D	9D APPX 7D	3-26-74	RJC —	WHS FKB AFR

ISSUE 53D

SD-65741-01 3J07

PBX SYSTEMS
NO. 756A
LINE, LINK, AND MARKER CIRCUIT

(LL & MKR)

MFR DISC.

SD-65741-01-AI
111 SHEETS

BELL TELEPHONE LABORATORIES INCORPORATED

SIZE A4S

PRINTED IN U.S.A.

SHEET INDEX (CONT)

CONTENTS	SHEET NO.	ISSUE NO. 41	42	43	44	45	46	47	48	49	50	51	52	53	54	55	56	57	58	59	60	61	62	63	64	65
CKT NOTES WORKING LIMITS	D1A D1B	38 41	38 42	43 43	44 44	44 45	46 46	47 46	48 48	48 49	48 50	48 51	48 51	53 53												
INFO NOTES 301-302	D2	16	16	16	16	16	16	16	16	16	16	16	16	16												
INFO NOTES 303-305	D3	1	1	1	1	1	1	1	1	1	1	1	1	1												
INFO NOTES 306-309	D4	1	1	1	1	1	1	1	1	1	1	1	1	1												
INFO NOTES 310 TO END AND EQUIP.NOTE 201	D5	37	37	43	43	43	46	46	48	48	48	48	48	48												
SC 1 - STATION DIAL TONE CONNECTION	E1	41	41	41	41	41	41	41	41	41	41	41	41	41												
SC 2 - CENTRAL OFFICE TRUNK OR RINGDOWN TIE TRUNK DIAL TONE CONNECTION	E2	41	41	41	41	41	41	41	41	41	41	41	41	41												
PART OF SC 3 - STATION OR CODE 8 TIE TRUNK TO STATION CONNECTION	E3	41	41	41	41	41	41	41	41	41	41	41	41	41												
PART OF SC 3 - STATION OR CODE 8 TIE TRUNK TO STATION CONNECTION	E4	41	41	41	41	41	41	41	41	41	41	41	41	41												
SC 4 - STATION TO CENTRAL OFFICE TRUNK CONNECTION	E5	41	41	41	41	41	41	41	41	41	41	41	41	41												
SC 5 - CENTRAL OFFICE OR RINGDOWN TIE TRUNK TO STATION CONNECTION	E6	41	41	41	41	41	41	41	41	41	41	41	41	41												
SC 6 - CENTRAL OFFICE OR RINGDOWN TIE TRUNK TO CODE 8 TRUNK CONNECTION	E7	41	41	41	41	41	41	41	41	41	41	41	41	41												
PART OF SC 7 - STATION TO STATION CALL TO BUSY STATION - BUSY TONE TRUNK IDLE - ALL STATIONS IN HUNTING GROUP ALSO BUSY	E8	41	41	41	41	41	41	41	41	41	41	41	41	41												
PART OF SC 7 - STATION TO STATION CALL TO BUSY STATION - BUSY TONE TRUNK IDLE - ALL STATIONS IN HUNTING GROUP ALSO BUSY SC 8 - STATION TO STATION CALL TO BUSY STATION - STATION IN HUNTING GROUP IDLE	E9	41	41	41	41	41	41	41	41	41	41	41	41	41												
PART OF SC 9 - CENTRAL OFFICE OR RING-DOWN TIE TRUNK CALL TO BUSY STATION - ALL OTHER STATIONS IN HUNTING GROUP ALSO BUSY - NO OTHER TRUNK CAMPED ON	E10	41	41	41	41	41	41	41	41	41	41	41	41	41												
PART OF SC 9 - CENTRAL OFFICE OR RING-DOWN TIE TRUNK CALL TO BUSY STATION - ALL OTHER STATIONS IN HUNTING GROUP ALSO BUSY - NO OTHER TRUNK CAMPED ON SC 10 - LINK SHIFT TIMING	E11	41	41	41	41	41	41	41	41	41	41	41	41	41												
SC 11 - ALL LINKS BUSY - STATION TO STATION CALL TERMINATING CONDITION SC 12 - ALL JUNCTORS BUSY - BUSY TONE TRUNK IDLE	E12	41	41	41	41	41	41	41	41	41	41	41	41	41												
SC 13 - BUSY TONE TRUNK BUSY PART OF SC 14 - INTERCEPTED CALL - CALLED LINE UNASSIGNED	E13	41	41	41	41	41	41	41	41	41	41	41	41	41												
PART OF SC 14 - INTERCEPTED CALL - CALLED LINE UNASSIGNED	E14	36	36	36	36	36	36	36	36	36	36	36	36	36												
SC 15 - CENTRAL OFFICE OR RINGDOWN TIE TRUNK TO CODE 8 TRUNK CALL-ALL TRUNKS BUSY	E15	41	41	41	41	41	41	41	41	41	41	41	41	41												
SC 17 - ABANDONED CALL SC 18 - TIME OUT CHECK	E16	41	41	41	41	41	41	41	41	41	41	41	41	41												
SC 19 - CALLED LINE UNASSIGNED - ALL ATTENDANT TRUNKS BUSY	E17	41	41	41	41	41	41	41	41	41	41	41	41	41												
SC 20 - CENTRAL OFFICE OR RINGDOWN TIE TRUNK CALL TO BUSY STATION - ALL OTHER STATIONS IN HUNTING GROUP ALSO BUSY - ANOTHER TRUNK IS CAMPED ON	E18	41	41	41	41	41	41	41	41	41	41	41	41	41												
SC 21 - LINK SHIFT TIMING SC 22 - ALL LINKS BUSY - STATION TO STATION CALL TERMINATING CONDITION	E19	33	33	33	33	33	33	33	33	33	33	33	33	33												
SC 23 - LINK SEQUENCE CONTROL SC 24 - LINK GROUP SEQUENCE CONTROL SC 25 - UNITS SEQUENCE CONTROL	E20	12	12	12	12	12	12	12	12	12	12	12	12	12												
SC 26 - CANCEL CAMP ON	E21	36	36	36	36	36	36	36	36	36	36	36	36	36												
SC 27 - CENTRAL OFFICE OR RINGDOWN TIE TRUNK CALL TO BUSY STATION - MESSAGE REGISTRATION ON SLEEVE	E22	35	35	35	35	35	35	35	35	35	35	35	35	35												
SC 28 - CENTRAL OFFICE TO INWARD RESTRICTED STATION	E23	37	37	37	37	37	37	37	37	37	37	37	37	37												
SC 29 - STATION TO CODE 8 TIE TRUNK CONNECTION	E24	41	41	41	41	41	41	41	41	41	41	41	41	41												
SC 30 - CODE 8 TIE TRUNK DIAL TONE CONNECTION	E25	41	41	41	41	41	41	41	41	41	41	41	41	41												
SC 31 - CODE 8 TIE TRUNK TO CODE 8 TIE TRUNK CONNECTION	E26	41	41	41	41	41	41	41	41	41	41	41	41	41												
SC 32 - CODE 8 TIE TRUNK EQUIPPED WITH SWITCH PAD TO SWITCHBOARD ATTENDANT CONNECTION	E27	41	41	41	41	41	41	41	41	41	41	41	41	41												
SC 33 - CENTRAL OFFICE OR RINGDOWN TIE TRUNK CALL TO BUSY STATION - MESSAGE REGISTRATION PULSE ON SLEEVE OF ANY LINK	E28	41	41	41	41	41	41	41	41	41	41	41	41	41												
SC 34 - LINK SHIFT TIMING SC 35 - ALL LINKS BUSY - STATION TO STATION CALL TERMINATING CONDITION	E29	33	33	33	33	33	33	33	33	33	33	33	33	33												
SC 36 - MARKER TIMING SECOND TRIAL, NO CONNECTION, AND TROUBLE RELEASE	E30	41	42	42	42	42	42	42	42	42	42	42	42	42												

DRAWING ISSUE
41B
42B
43B
44AC
45D

ISSUE 53D

LINE, LINK, AND MARKER CIRCUIT

SD-65741-01-A2

BELL TELEPHONE LABORATORIES INCORPORATED

6S

SHEET INDEX (CONT)

CONTENTS	SHEET NO.	ISSUE NO. 41	42	43	44	45	46	47	48	49	50	51	52	53	54	55	56	57	58	59	60	61	62	63	64	65
CKT REQ TABLES, MAGNETS	F1	16	16	16	16	16	16	16	16	16	16	16	16	16												
CKT REQ TABLES, TO COSB	F2	36	36	36	36	36	46	46	48	48	48	48	48	48												
CKT REQ TABLES, COTA TO LAL1	F3	36	36	36	36	36	46	46	48	48	48	48	48	48												
CKT REQ TABLES, LAL2 TO LTCB	F4	33	33	33	33	33	33	33	33	33	33	33	33	33												
CKT REQ TABLES, LTS2 TO RCA1	F5	33	33	33	33	33	33	33	33	33	33	33	33	33												
CKT REQ TABLES, RCBO TO RLBA	F6	30	30	30	30	30	30	30	30	30	30	30	30	30												
CKT REQ TABLES, RLSB TO SMRBA	F7	11	11	11	11	11	11	11	11	11	11	11	11	11												
CKT REQ TABLES, SMTA TO TEAB	F8	41	41	41	41	41	41	41	41	41	41	41	41	41												
CKT REQ TABLES, TEBO TO TRC1	F9	41	41	41	41	41	41	41	41	41	41	41	41	41												
CKT REQ TABLES, TRCA TO ULA	F10	33	33	33	33	33	33	33	33	33	33	33	33	33												
CKT REQ TABLES, ULB TO END	F11	33	33	33	33	33	33	33	33	33	33	33	33	33												

CONTENTS	SHEET NO.	ISSUE NO. 41	42	43	44	45	46	47	48	49	50	51	52	53	54	55	56	57	58	59	60	61	62	63	64	65

DRAWING ISSUE
41B
42B
43B
44AC
45D

ISSUE 53D

LINE, LINK, AND MARKER CIRCUIT	SD-65741-01-A3
BELL TELEPHONE LABORATORIES INCORPORATED	DWG SIZE 6S

PRINTED IN U.S.A.

APPARATUS INDEX

DESIG	LOCATION FS	APP FIG.	EQPT
RELAYS			
A	36B5	20	EXT
A0	5B/D1	4	-
ACA	8A/A7	7	6-V
ACB	8A/B7	7	6-U
ALBA	22B2,40A1	9,22	6-P
ALBB	22D2,40B1	9,22	6-P
ARBA	2A8	4	6-AB
ARBB	2C8	4	6-AA
ATB	5B/A6	4	-
B	36B5	20	EXT
B1	5B/E1	4	-
BSYA	12D3	7	6-V
BSYAA	12D3	7	6-V
BSYB	12E3	7	6-U
BSYBA	12F3	7	6-U
BTCA	15H2	8	6-T
BTCB	15H2	8	6-S
BTTA	16B4	8	6-T
BTTB	16F4	8	6-S
BTTC	**16D4**	**8**	**6-R**
BYA	12C3	7	6-V
BYB	12F2	7	6-U
CCC	**16D1**	**8**	**6-R**
CO20-29	35G3	3	SWBD OR
CO30-79	1E4	3	APP CAB
COA	16B4	8	6-T
COAA	16B4	8	6-P
COB	**16E4**	**8**	**6-S**
COBA	**16E4**	**8**	**6-R**
COAL	32D1	11	1AB
CONA	16B4	8	6-T
CONAA	16A4	8	6-T
CONB	16E4	8	6-S
CONBA	16E4	8	6-S
COS	23D4	9	6-P
COSA	22D4,40F3	9,22	6-P
COSB	22E4,40H3	9,22	6-P
CCTA	15F6	8	6-T
CCTB	15G6	8	6-S
DCKA	26A5	8	6-R
DCKB	26C5	8	6-R
HCA	9B1	7	6-Y
HCB	9C1	7	6-Y
HMKA	9B4	7	6-V
HMKB	9C4	7	6-U
HMTA	15C2	8	6-T
HMTAA	15C2	8	6-T
HMTB	15E2	8	6-S
HMTBA	15D2	8	6-S
ICTA	16D4	8	6-T
ICTB	16G4	8	6-S
IN8	8B/A1	4	-
IN20-24	35C5	1	2-N
IN25-29	35G5	1	2-P
INT	5B/A1	4	-
JR0	13A1	7	6-X
JR1	13C1	7	6-X
JR2	13D1	7	6-X
JR3	13E1	7	6-X
JR4	13F1	7	6-X
JR5	13G1	7	6-X
JRAL	29A9	11	1-AA
JREA	13B8	7	6-Y
JREB	13B8	7	6-X
JTA	14A6	7	6-Y
JTAA	14H5	7	6-Y
JTB	14B6	7	6-X
JTBA	14H7	7	6-X
L20-24	35C6	1	2-N
L25-29	35C6	1	2-P
L30-39	1D6	1	2-L
L40-59	1D6	2	3-L
L60-79	1D6	2	4-L
LALI	32B4	11	1-AA

DESIG	LOCATION FS	APP FIG.	EQPT
RELAYS			
LAL2	32B7	11	1-AA
LAL2A	32A7	11	1-AA
LBA	22B2,40A1	9,22	6-Q
LBB	22E2,40C1	9,22	6-Q
LCK1	24F3	9,22	6-P
LCK2	24H3	9,22	6-P
LEA	23A4,38G2	9,22	6-Q
LEAA	23B4,38H2	9,22	6-Q
LEB	23B4,38H7	9,22	6-Q
LEBA	23C4,38H7	9,22	6-Q
LSHA	22A2,40B3	9,22	6-N
LSHB	22C2,40C3	9,22	6-N
LT2	20A2,38C1	9,22	6-N,P
LT3	20D2,38E1	9,22	6-N,P
LT4	20F2,38B6	9,22	6-N,P
LT5	20A7,38E6	9,22	6-N,P
LT6	20D7,39C1	9,22	6-N,P
LT7	20F7,39E1	9,22	6-N,P
LT8	21A2,39C6	9,22	6-N,P
LT9	21D2,39E6	9,22	6-N,P
LTA	22A7,40A7	9,22	6-Q
LTAA	22A7,40A7	9,22	6-Q
LTB	22A4,40B7	9,22	6-Q
LTBA	22B4,40B7	9,22	6-Q
LTCA	22B1,40C1	9,22	6-N
LTCB	22B5,40D1	9,22	6-N
LTS2	21F2	9	6-P
LTS3	21A7	9	6-P
LTS4	21C7	9	6-P
LTS5	21E7	9	6-P
LTS6	21F7	9	6-P
LTS7	22F1	9	6-P
LTS8	22E1	9	6-P
LTS9	22E1	9	6-P
LUCA	8A/F5	7	6-V
LUCB	8A/H5	7	6-U
MAL	30D0	11	1-AB
MON 2-7	1F3	3	SWBD
MON A,B,C	1H2	3	APP CAB
MS	36F5	21	EXT
MTA	25A/F2	10	6-K
MTB	25A/F7	10	6-J
NAA	25A/C2	10	6-K
NAB	25A/C7	10	6-J
NCA	25A/D2	10	6-K
NCB	25A/D7	10	6-J
NT	18G5	9,22	6-L,M
OT20-24	35F5	1	2-N
OT25-29	35F5	1	2-P
RC	2E8	4	6-AA
RI	2G8	4	6-AA
RACA	17A7	5	6-G
RACB	17A7	5	6-G
RAIA	17C7	5	6-G
RAIB	17C7	5	6-G
RCAO	5A/A1	5	6-H
RCAI	5A/E1	5	6-H
RCBO	5A/B1	5	6-H
RCBI	5A/F1	5	6-H
RCCO	5A/C1	5	6-H
RCCI	5A/F1	5	6-H
RCDO	5A/C1	5	6-H
RCDI	5A/G1	5	6-H
RCEO	5A/D1	5	6-H
RCEI	5A/G1	5	6-H
RCKA	26A7	8	6-R
RCKB	26B7	8	6-R
RCTA	14C6	7	6-Y
RCTAA	14C6	7	6-V

DESIG	LOCATION FS	APP FIG.	EQPT
RELAYS			
RCTB	14D6	7	6-X
RCTBA	14D6	7	6-U
RGA	17E7	5	6-G
RGAA	17F7	5	6-G
RGB	17G7	5	6-G
RGBA	17H7	5	6-G
RHKA	17A1	5	6-G
RHKB	17B1	5	6-G
RLO	37E6	19	EXT
RLI	37B6	19	EXT
RLA	15A6	8	6-T
RLAA	15B6	8	6-T
RLAB	15C6	8	6-T
RLAL	30C2	11	1-AA
RLB	15C6	8	6-S
RLBA	15D6	8	6-S
RLBB	15E6	8	6-S
RLSA	25A/E2	10	6-K
RLSAA	25A/E2	10	6-K
RLSB	25A/E7	10	6-J
RLSBA	25A/E7	10	6-J
RPO	3G1	4	6-Z
RPI	3G2	4	6-Z
RPAO	5A/H6	7	6-W
RPAI	5A/H6	7	6-W
RUCA	8A/D5	7	6-V
RUCB	8A/E5	7	6-U
S0	10C0	7	6-W
S1	10C2	7	6-W
S2	10C4	7	6-W
S3	10C5	7	6-W
S4	10C7	7	6-W
S5	11C0	7	6-W
S6	11C2	7	6-W
S7	11C4	7	6-W
S8	11C5	7	6-W
S9	11C7	7	6-W
SAA	25A/B2	10	6-K
SAB	25A/B7	10	6-J
SEA	12D6	7	6-V
SEAA	12D6	7	6-V
SEB	12F6	7	6-U
SEBA	12F6	7	6-U
SL20-29	35F8	17	2-Q
SMC0	24A0	16	4-AA
SMC1	24C0	15	3-V
SMC2	24D0	1	2-L
SMC3	24D0	1	2-L
SMC4	24E0	15	3-V
SMC5	24E0	15	3-V
SMC6	24F0	16	4-AA
SMC7	24G0	16	4-AA
SMC8	24G0	16	4-AA
SMRA	15E2	8	6-T
SMRAA	15F2	8	6-T
SMRB	15F2	8	6-S
SMRBA	15G2	8	6-S
SMTA	23F2	9,22	6-Q
SMTB	23G2	9,22	6-Q
SOA	15A2	8	6-R
SOB	15B2	8	6-R
STA	25A/A2	10	6-K
STAR	25A/A2	10	6-K
STB	25A/A7	10	6-J
STBR	25A/A7	10	6-K
T2	3A1	4	6-AA
T3	3C1	4	6-AA
T4	3A4	4	6-AA
T5	3C4	4	6-AA

DESIG	LOCATION FS	APP FIG.	EQPT
RELAYS			
T6	3A8	4	6-AA
T7	3C8	4	6-AA
TA	25B/B4	10	
TA2	2D4	4	6-AB
TA3	2D4	4	6-AB
TA4	2D4	4	6-AB
TA5	2D4	4	6-AB
TA6	2D4	4	6-AB
TA7	2D4	4	6-AB
TAA	25A/G3	10	6-K
TAAL	30F2	11	1-AA
TAB	25A/G8	10	6-J
TACA	4A8	7	6-Y
TACAA	4B8	7	6-Y
TACB	4B8	7	6-Y
TACBA	4C8	7	6-Y
TAL	31A0	11	1-AA
TB	25B/D4	10	
TCK1	3F0	4	6-Z
TCK2	3G0	4	6-Z
TCK3	3F0	4	6-Z
TCK4	3H0	4	6-Z
TCS2	4A1	1	2-M
TCS3	4D1	1	2-M
TCS4	4F1	2	3-M
TCS5	4A3	2	3-M
TCS6	4D3	2	4-M
TCS7	4F3	2	4-M
TEA0	2E1	4	6-AB
TEA1	2F1	4	6-AB
TEA2	2F1	4	6-AB
TEA3	2F1	4	6-AB
TEB0	2G1	4	6-AA
TEB1	2H1	4	6-AA
TEB2	2H1	4	6-AA
TEB3	2H1	4	6-AA
THC2	4B1	1	2-M
THC3	4D1	1	2-M
THC4	4G1	2	3-M
THC5	4B3	2	3-M
THC6	4D3	2	4-M
THC7	4G3	2	4-M
TKO	5A/A6	6	4-Z
TK8	5B/B3	1	2-L
TK9	5B/D3	6	4-Z
TKA0	5A/B6	6	4-Z
TKA8	5B/C3	1	2-L
TKA9	5B/E3	6	4-Z
TKB0	5A/B6	6	4-Z
TKB8	5B/C3	1	2-L
TKB9	5B/E3	6	4-Z
TM2	4C1	1	2-M
TM3	4E1	1	2-M
TM4	4H1	2	3-M
TM5	4C3	2	3-M
TM6	4E3	2	4-M
TM7	4H3	2	4-M
TMA	25A/G0	10	6-K
TMB	25A/G5	10	6-J
TOA	25A/H0	10	6-K
TOAL	33B2	11	1-AA
TOALA	33B2	11	1-AA
TOB	25A/H5	10	6-J
TOKA	26F2	10	6-K
TOKB	26G2	10	6-J
TOLA	26F7	10	6-K
TOLB	26G7	10	6-J
TP2	3G4	4	6-Z
TP3	3G5	4	6-Z
TP4	3G6	4	6-Z

DESIG	LOCATION FS	APP FIG.	EQPT
RELAYS			
TP5	3G7	4	6-Z
TP6	3G7	4	6-Z
TP7	3G8	4	6-Z
TRO	2A1	4	6-AB
TRI	2C1	4	6-AA
TRA	25A/D2	10	6-K
TRAO	2A4	4	6-AB
TRAI	2A4	4	6-AB
TRAL	31D4	11	1-AA
TRB	25A/D7	10	6-J
TRCC	4E8	6	4-Z
TRCI	4H8	6	4-Z
TRCA	14A2	7	6-Y
TRCAA	14B2	7	6-Y
TRCB	14E2	7	6-X
TRCBA	14E2	7	6-X
TRKA	14C2	7	6-Y
TRKAA	14B2	7	6-Y
TRKB	14F2	7	6-X
TRKBA	14F2	7	6-X
TRLA	22B7,40C7	9,22	6-Q
TRLB	22C7,40C7	9,22	6-Q
TRMO	4D8	6	4-Z
TRMI	4F8	6	4-Z
TRPO	3G3	4	6-Z
TRPI	3G4	4	6-Z
TRUO	4E9	6	4-Z
TRUI	4G8	6	4-Z
TS	19D2	8	6-R
TSDA	18E5	8	6-R
TSDB	18F5	8	6-R
TT	18B5	8	6-R
TU2	4B1	1	2-M
TU3	4E1	1	2-M
TU4	4G1	2	3-M
TU5	4B3	2	3-M
TU6	4E3	2	4-M
TU7	4G3	2	4-M
U0	6B1	7	6-V
U1	6E1	7	6-V
U2	6B6	7	6-V
U3	6E6	7	6-V
U4	7B1	7	6-V
U5	7E1	7	6-V
U6	7B6	7	6-U
U7	7E6	7	6-U
U8	8A/B0	7	6-U
U9	8A/E0	7	6-U
UAL	29B3	11	1-AA
UALI	29D3	11	1-AA
UALIA	29C3	11	1-AA
UAL2	29A2	11	1-AA
UEA	8A/D8	7	6-V
UEB	8A/F8	7	6-U
ULA	8A/G5	7	6-V
ULB	8A/H5	7	6-U

DESIG	LOCATION FS	APP FIG.	EQPT
RELAYS			
WIL	24C7	9,22	6-L,M
WILA	32F7	9,22	6-L,M
WL	24A7	9,22	6-L,M
WLA	32D7	9,22	6-L,M
WLG	22D8,40E8	9,22	6-L,M
WLGA	22C8,40D8	9,22	6-L,M
WU	12B6	9,22	6-L,M
WUA	29G3	9,22	6-L,M
XC	38A0	22	6-P
XCAL	32D1	11	1AB
ZIL	24D7	9,22	6-L,M
ZL	24B7	9,22	6-L,M
ZLG	22E7,40F6	9,22	6-L,M
ZU	12C6	9,22	6-L,M

CONNECTOR			
J1	25B/B3	10	6

DIODE			
A	36B5	20	
A0	5B/D1	4	
ATB1	5B/C2	4	
ATB2	5B/C1	4	
B	36E5	20	
B1	5B/E1	4	
CC1	16C4	8	
CC2	16F4	8	
CO1	9C7	8	
CO2	9C8	8	
CO3	9D7	8	
CO4	9D8	8	
CO20-29	35F2	3	
CO30-79	1D4	3	
COSA	40E3	22	
COSB	40H3	22	
D1	38B3	8	
D2	39B3	8	
IN8	8B/A1	4	
INT1	5B/A0	4	
INT2	5B/A1	4	

DRAWING ISSUE

1	RMC AWB
2B	TCC KCB
4A	ABT LAT
11B	RTN LAT
12B	RTN NJM ZEM
23D	DMC AWB
24D	WPM SAM KFL
27D	EWE SMK JFB
30D	MJS PJS BTH
32D	JJR SMK EHP
33D	PDZ MJS BTH
35D	PDZ MJS BTH
37B	PDZ RJS MDJ
40D	
41B	

ISSUE 48B

SD-65741-01-A4

LINE, LINK, AND MARKER CIRCUITS (2)

BELL TELEPHONE LABORATORIES INCORPORATED — SHEET NO. 6S

SD-65741-01-A4

PRINTED IN U.S.A.

APPARATUS INDEX (CONT)

DESIG	LOCATION FS	APP FIG.	EQPT
DIODE (CONT)			
H	1G3	2	
H	6F5	1	
H	7H4	1	
H	35A2	1	
HA	2B7	8	
HB	2C7	8	
HE	2C7	8	
HO	2B7	8	
L	35C6	1	
LT2	38B3	22	
LT3	38D3	22	
LT4	38B8	22	
LT5	38E8	22	
LT6	39B3	22	
LT7	39E3	22	
LT8	39B8	22	
LT9	39E8	22	
LTSA	20G1, 38D0	8	
LTSB	21F0, 39E5	8	
LTSC	21E2, 39G5	8	
RLSA	37D2	10	
RLSB	37D3	10	
RT1	15B1	8	
RT2	15C1	8	
RT3	15D1	8	
RT4	15E1	8	
S(0-9)	10C-, 11C-	7	
SCC	35H5	1	
SMTA	9C4	9	
SMTB	9D4	22	
TA	25B/B4	10	
TB	25B/D4	10	
TK8	5B/B2	4	
TP2-7	3G4-8	4	
TRP0,1	5F3	4	
U4	7A1	4	
U5	7E1	4	
U6	7A6	4	
U7	7E6	4	
U8	8A/B1	4	
U9	8A/E1	4	

JACKS			
L20-29	35D0	3	
L30-79	1D1	3	

LAMPS			
CS	18A0	7	
COAL	33B9	11	
JRAL	33D8		
LAL1	33F8		
LAL2	33F8		
MAL	33H8		
RLAL	33D8		
TAAL	33G8		
TAL	33E8		
TOAL	33E8		
TRAL	33C8		
TS	33G8		
UAL	33B8		
UAL1	33B8		
UAL2	33C8		
XCAL	33B9	11	

DESIG	LOCATION FS	APP FIG.	EQPT
MAGNETS, HOLD			
LHM(20-29)	35H5	14	2
LHM(30-39)	1E6	14	2
LHM(40-59)	1E6	13	3
LHM(60-79)	1E6	12	4
THM(00-04)	34D6	12	4
THM(05,06)	34F9	12	4
THM07	34G6	12	4
THM(08,09)	17B3	12	4
THM(10-17)	9F3	13	3
THM(18,19)	17C3	13	3
THM80	34F9	12	4
THM(81-84)	9F3	12	4
THM(85-89)	34D6	12	4

MAGNETS, SELECT			
SM(0-8)0	24H6	12,13,14	
SM(0-8)1	24G6	12,13,14	
SM(0-8)2	24A3	12,13,14	
SM(0-8)3	24B3	12,13,14	
SM(0-8)4	24B3	12,13,14	
SM(0-8)5	24C3	12,13,14	
SM(0-8)6	24D3	12,13,14	
SM(0-8)7	24D3	12,13,14	
SM(0-8)8	24F3	12,13,14	
SM(0-8)9	24F3	12,13,14	

RESISTORS			
COSA	2305,40F3	9,22	
COSB	2305,40G3	9,22	
L02	20B3	9	
L03	20D3	9	
L04	20G3	9	
L05	20B3	9	
L06	20D8	9	
L07	20G8	9	
L08	21B4	9	
L09	21E4	9	
L12	20B3	9	
L13	20D3	9	
L14	20G3	9	
L15	20B8	9	
L16	20D6	9	
L17	20G8	9	
L18	21B4	9	
L19	21E4	9	
LTA2	20A0,38B0	9,22	
LTA3	20C0,38E0	9,22	
LTA4	20F0,38B5	9,22	
LTA5	20F5,38E4	9,22	

DESIG	LOCATION FS	APP FIG.	EQPT
RESISTORS			
LTA6	20C5,39C0	9,22	
LTA7	20F5,39E0	9,22	
LTA8	21A0,39C4	9,22	
LTA9	21C0,39E4	9,22	
LTB2	20B0	9	
LTB3	20B0	9	
LTB4	20G0	9	
LTB5	20G0	9	
LTB6	20D5	9	
LTB7	20D5	9	
LTB8	21B1	9	
LTB9	21B8	9	
PC	36G4	21	
S20-29	35D7	1	
SM0-9	24A4-F4, 24H5-G5	9,22	
TA	25B/B4	10	
TB	25B/C4	10	
TKA9	5B/F3	6	
TKB8	5B/C3	1	
WIL	24C7	9,22	
WILA	32F8	9,22	
WL	24A7	9,22	
WLA	32D8	9,22	
WLGA	22E8, 40D8	9,22	
WU	12B7	9,22	
WUA	29G4	9,22	
ZU	12C7	9,22	

THERMISTORS			
ATB	5B/A7	4	

TIME DELAY UNIT			
T	25B/B3	10	6

LEAD INDEX

DESIG	FS LOC
MARKER TO MARKER	
A1	31G4
A2	31G4
A3	31F2
A4	31G5
A5	31F5
A6	31G2
A7	31E6
A8	31E6
A9	31F6
A10	31E7
A11	31G6
A12	31F8
BAT	36C3
COA	32D1
COSA	2205,40F4
COSB	2205,40H4
COT	18D4
CSO	18B2
CSI	18C2
CS3	18D2
CS4	18D2
CS5	18E2
CS6	18F2
CS7	18F2
CS8	18G2
CS9	18H2
GRD	36G3
HE	9D9
HO	9G8
JRAL	29A9
L2	3AC
L3	3C0
L4	3A4
L5	3C4
L6	3A7
L7	3C7
LAL1	32B3
LAL2	32B7
LG	21E1,39G4
LHO	6D1
LHI	6G1
LH2	6D6
LH3	6G6
LH4	7D1
LH5	7G1
LH6	7D6
LH7	7G6
LH8	8A/D1
LH9	8A/G1
M1	1F2
M2	31B6
MS80-89	35H6
OF	34D1
RO	36B3
RI	36E3
RO2	27D1
RO3	27C1
RO4	27C1
RO5	27C1

DESIG	FS LOC
MARKER TO MARKER	
RO6	27C1
RO7	27C1
RO8	27C1
RO9	27B1
R12	27D1
R13	27C1
R14	27C1
R15	27C1
R16	27C1
R17	27C1
R18	27C1
R19	27B1
RCO	36C3
RC1	36C3
RL	37A5
RLO	37E5
RL1	37B5
RLAL	30C3
RSA	19D4
RSB	19E4
RSC	19D4
RSD	19E4
S02	27D1
S03	27C1
S04	27C1
S05	27C1
S06	27C1
S07	27C1
S08	27C1
S09	27B1
S12	27D1
S13	27C1
S14	27C1
S15	27C1
S16	27C1
S17	27C1
S18	27C1
S19	27B1
SD6	10G5
SD7	10G3
SD8	10G1
SD9	10G0
SLT0	10F0
SLT1	10F2
SLT2	10F4
SLT3	10F6
SLT4	10F8
SLT5	11F0
SLT6	11F2
SLT7	11F4
SLT8	11F6
SLT9	11F8

DESIG	FS LOC
MARKER TO MARKER	
SMC0	24A0
SMC1	24C0
SMC6	24J0
SMC8	24G0
SMTA	23F7
SMTB	23G7
TC	19G4
T02	27E1
T03	27C1
T04	27C1
T05	27C1
T06	27C1
T07	27C1
T08	27C1
T09	27C1
T12	27D1
T13	27C1
T14	27C1
T15	27C1
T16	27C1
T17	27C1
T18	27C1
T19	27B1
TAL	31A0
TAAL	30G3
TDM0	36E3
TDM1	36A3
THC	6D1
TH1	6G1
TH2	6C6
TH3	6G6
TH4	7C2
TH5	7G1
TH6	7D6
TH7	7G6
TH8	8A/D1
TH9	8A/G1
TK00	36H3
TK01	36H3
TK98	36C0
TKL0	5A/A6
TKL8	5B/B4
TKL9	5B/b4
TKU0	5A/A5
TKU8	5B/B2
TKU9	5B/b2

DESIG	FS LOC
MARKER TO MARKER	
TML2	4A1
TML3	4D1
TML4	4F1
TML5	4A4
TML6	4D4
TML7	4F4
TMU2	4A0
TMU3	4D0
TMU4	4F0
TMU5	4A3
TMU6	4D3
TMU7	4F3
TOAL	33B2
TOKAL	26F5
TOKAU	26F0
TOKBL	26G5
TOKBU	26G0
TPA	4F2
TPB	405
TRAL	31E4
TRCLO	4D8
TRCLI	4F8
TRCUO	4D8
TRCUI	4F8
TS	33G8
TTOA	19B4
TTEA	19B4
U00	6B2
U01	6F2
U02	6B8
U03	6F7
U04	7B2
U05	7E2
U06	7B7
U07	7F7
U08	8A/B2
U09	8A/E2
UAL	29B4
UAL1	29D3
UAL2	29A2
XCA	32D1

DRAWING ISSUE		
SUPERSEDES ISS 29B		
30D	DMB	
	PJS	
	GFH	
31D	PMC	
	PJS	
	RHP	
32D	EWF	
	CAK	
	RHP	
	ROZ	
35D	PJS	
	RHP	
	ROZ	
36D	PJS	
	LCU	
37B	ROZ	
	PJS	
	LCU	
38D	ROZ	
	PJS	
	LCU	
41B		
43B		
	AC	

ISSUE 51B

SD-65741-01-A5

LINE, LINK, AND MARKER CIRCUIT

BELL TELEPHONE LABORATORIES INCORPORATED

SYS SIZE 6S

SD-65741-01-A5

PRINTED IN U.S.A.

LEAD INDEX (CONT)

DESIG	FS LOC
3A CODE CALL CKT OR INTERFACE TRK CKT	
R1	35G8
R2	35E8
S	35G8
S1A	35G8
S2	35E8
T1	35G8
T2	35E8

DESIG	FS LOC
ALARM, TRANSFER, AND TEST CKT	
AT	33C5
CA	19D1
JA	29B8
KA	31E4
LA	32A3
LAI	32DI
MT	33D5
OA	33C2
R	186, 1C5
R1	1C5
RA	30E2
S	1F7
S1	1F6
T	185, 186
T1	185
TA	31A0
TT	3385
UA	29C2

DESIG	FS LOC
ATT TRUNK CKT	
BAT	34F9
HM	34F9
IT00-02	34F6
IT05-07	34F6
KO	18H6
R	27H3
S	27H3
T	27H3
TR01	2B1
TR02	2B1
TR10	2D1
UO	6A3
U5	7E3
U6	7A8

DESIG	FS LOC
AUTOMATIC TRUNK LEVEL INTERCONNECTING UNIT	
R2	35E8
S2	35E8
T2	35E8

DESIG	FS LOC
AUXILIARY POSITION CKT	
COSA	22D5, 40F4
COSB	22E5, 40G4
COSAI	22E6, 40F5
COSBI	22E6, 40G5
R2	35E8
S2	35E8
T2	35E8

DESIG	FS LOC
BUSY TONE TRUNK CKT	
BAT	34G7
HM07	34H7
R	27G3
S	27G3
T	27G3

DESIG	FS LOC
BUSY VERIFICATION AUX TRUNK CKT	
BY	19G9
IT07	34F6
LK	19G2
ME	9F9
NN	19G3
NT	18F6
R	27H3
RLSE	19G9
RSE	19G9
S	27H3
ST90	34D6
ST90-1	34D6
T	27H3
UO	7A7
U6	7A8

DESIG	FS LOC
CENTRAL OFFICE AND RINGDOWN TIE TRUNK CKT	
BAT	34D7
BYE	19H8
BYO	19C9
CW	23D3
FFE	19H8
FFO	19C9
IT90-99	34D7
ME	34C7
MO	34C7
NT	18G6
R	27G1
RLSE	19H8, 34E7
RLSO	19C9, 34E7
RSO	19C9
RSE	19H8
RTE	19H8
RTO	19C9
S	27G1
ST90-99	34D7
T	27G1
TLAE	19H8
TLAO	19C9

DESIG	FS LOC
CENTRAL OFFICE AND RINGDOWN TIE TRUNK CKT (CONT)	
TRO	2A0
TR1	2C0
TTE	19H8
TTO	19C9
UO	6B3
U1	6E3
U2	6B8
U3	6E8
U4	7B3
U5	7F3
U6	7B8
U7	7F8
U8	8A/B3
U9	8A/E3

DESIG	FS LOC
CORDLESS POS CKT	
BL20-29	35A7
BL30-79	1A7
BL80-89	35A7

DESIG	FS LOC
DIAL CONFERENCE CKT.	
R2	35E8
S2	35E8
T2	35E8

DESIG	FS LOC
DIAL CONFERENCE TRUNK CKT(ATT CONT)	
CCC	16G0
CO	35A3
D8	5A/D3
OT1-5	35E6
R1	35A8
RLSE	19F9
RSE	19F9
S1	35A8
T1	35A8

DESIG	FS LOC
DIAL CONFERENCE TRUNK CKT (STA CONT)	
CCC	16D0
D0	5A/B3
D8	5A/D3
D9	5A/B3
HM	35C3
IT	35B3
MON 1	35D5
MON 2	35D5
OTG	35H5
RI	35A8
R2	35E8
RLSE	19F9
RSE	19F9
S1	35A8
S2	35E8
T1	35A8
T2	35E8

DESIG	FS LOC
JUNCTOR CKT	
BAT	9F3
OHM0-5	9F4
RO	27G4
RT	27G6
SO	27G4
ST	27G6
THM0-5	9F4
TO	27G4
TT	27G6

DESIG	FS LOC
LINE CKT	
HM	35C1
IT	35C1
S2	35C1

DESIG	FS LOC
LOUDSPEAKER PAGING TRUNK CKT	
HM	35D1
IT	35D1
R2	35D1
S2	35D1
T2	35D1

DESIG	FS LOC
MESSAGE WAITING SERVICE KEY, INTERRUPTER, AND POWER SUPPLY CIRCUIT	
L	1D5, 35A6
R	1D5, 35A6

DESIG	FS LOC
OUTGOING CENTRAL OFFICE TRUNK CIRCUIT	
R2	35C8
S2	35C8
T2	35C8

DESIG	FS LOC
RECORDED TELEPHONE DICTATION TRUNK CKT	
R2	35E8
S2	35E8
T2	35E8

DESIG	FS LOC
REGISTER CKT	
A	10H1
B	10H1
BTA0	17B4
BTA1	17D4
BY0	17G5
BY1	17E5
C	10H1
COT0	18D8
COT1	18E8
CPC0	34F1
CPC1	34F2
CTA0	15F7
CTA1	15G7
CTB0	15F7
CTB1	15G7
D	10H1
DC1	2E9
DC2	2E7
DC3	2G9
DC4	2G7
E	10G3
F	10G3
G	10G5
H	10G5
JTA0	14A9
JTA1	14B9
JTB0	14B9
JTB1	14B9
KPC0	18E8
KPC1	18E7
ON0	17A8
ON1	17D8
ONB0	17A8
ONB1	17D6
ONG0	17A6
ONG1	17D6
PCG0	34F1
PCG1	34F3
R	27G7
RA	28G3, 28G6
RA1	28G3, 28G6
RB	28G3, 28G6
RB1	28G3, 28G6
RCTA0	14C9
RCTA1	14C9
RCTB0	14D9
RCTB1	14E9
RHM0	17B4
RHM1	17D4
RRA0	17G5
RRA1	17E5

DESIG	FS LOC
REGISTER CKT (CONT)	
RRB0	17G5
RRB1	17E5
RTT0	18D8
RTT1	18E8
RV0	17H1
RV1	17H2
S	27G7
T	27G7
T0	5A/A,B5
T2	4C0
T3	4E0
T4	4H0
T5	4C3
T6	4E3
T7	4H3
T8	5B/B0
T9	5B/D-E0
TL00	19B2
TL01	19D3
TL10	19B2
TL11	19D3
TLA0	18D8
TLA1	18E8
TLD0	18D8
TLD1	18E8
TPC0	34G1
TPC1	34G3
TR00	19B2
TR01	19D3
TR10	19B2
TR11	19D3
TT00	36E1
TT01	36A1
TT1	36B0, 36E0
U0	6D2
U1	6G2
U2	6D7
U3	6H7
U4	7D2
U5	7H2
U6	7D7
U7	7H7
U8	8A/D2
U9	8A/H2

DESIG	FS LOC
MB & BY DISPL CKT.	
HM07	34H6
L3 BAT	20C6, 38B4
LB80-89	35E4
LD80-89	35F4
S02	20B5, 38C3
S12	20C4, 38D3
S03	20C4, 38F3
S13	20F4, 38F3
S04	20F4, 38D8
S14	20H4, 38D8
S05	20A9, 38F8
S15	20C9, 38F8
S06	20C9, 39D3
S16	20F9, 39D3
S07	20F9, 39G3
S17	20G9, 39G3
S08	21A4, 39D8
S18	21C4, 39D8
S09	21C4, 39G7
S19	21F4, 39G7
THM(0-5)	9G4

DESIG	FS LOC
OUTGOING TRUNK	
ATB	5B/A7

DESIG	FS LOC
STATION DIAL TRANSFER CONTROLLER CKT	
R02-R09	27A0
R12-R19	27A0
RGB	18F6
RGC	18F7
S02-S09	27A0
S12-S19	27A0
SM0,SM1	24G7
SM2-SM9	24C2
SMTA	23F8
SMTB	23F8
T02-T09	27A0
T12-T19	27A0
TFA	11F8
TFB	11F6
TR	2A2
TRB	8A/D3
TR9	8A/E3
TRA	11F8
TRB	11F6
TRT	4F8
TRO	2A1
TROA	2A1
TR1	2C1
TR1A	2C1

DESIG	FS LOC
STATION DIAL TRANSFER TRUNK CKT	
CCC	16E0
D0	5A/F3
D8	5A/H3
D9	5A/G3
DB	8A/C7
DC	8A/C7
DE	8A/C6
DG	8A/C6
FF (E,O)	19D9
RLS (E,O)	19D9
RS (E,O)	19D9

DESIG	FS LOC
STATION EQUIPMENT	
S	35H8
S1	35H8

DESIG	FS LOC
STATION LINE	
R	1D2, 35B1
T	1B2, 35B1

DESIG	FS LOC
TRAFFIC REGISTER CKT	
BAT	34G4
BTOF	34C0
BTPC	34C4
JOF	34E0
JPC	34D4
LOF	34B0
NCPC	34E4
OFO	34E0
OF8	34D0
OF9	34D0
OPC	34D4
OPC8	34F0
OPC9	34F0
ROF	34A0
STPC	34B4
TOPC	34A4
TPC	34G4
TPCO	34H0
TPC8	34G0
TPC9	34H0
TRPC	34F4

DESIG	FS LOC
TWO-WAY TIE TRUNK CKT	
O	36H5
R1	35B8
R2	
S1	
S2	
T1	
T2	35B8

DESIG	FS LOC
LINE OR TRUNK ACCESS CKT.	
R	1D2,35B1
T	1B2,35B1

DESIG	FS LOC
MESSAGE REGISTER CKT	
M__	1D7, 35G5

DESIG	FS LOC
STATION MESSAGE REGISTER PULSE AND SURCHARGE CKT	
COD	16H1
MR1	9F7
MR2	9F7
MR3	17H5, 32G6
MR4	17H5, 32A1
MR5	26E4, 40D0
MR6	26B4, 40D0
MR7	16A1
MR8	16A0
MR9	16C1
MR10	16C0
MR11	16A0
MR12	16A0
MR13	16C0
MR14	16C0
RSA	19E4
RSB	19E3

DESIG	FS LOC
INWARD RESTRICTION CKT.	
H(A-D)	19H6
HE, HF	9B0
IR2-7	19G4
RLS	19H4
S	1F5
SA	1F5
U(0-9)	19H4
2S	35G6
2SA	35G6

DESIG	FS LOC
552A, 552B, 552D, 552E, 605A 607A, 607B, 608A JACK CIRCUIT OR 608D JACK AND LAMP CIRCUIT	
R	1E1 35F1
S	1E1 35F1
SL	1E1 35F1
T	1E1 35F1

DESIG	FS LOC
TMS REMOTE SCANNER	
TU(BTT)	34G6
TU(L02-L05)	38E4
TU(L06-L09)	39H2
TU(L12-L15)	38E4
TU(L16-L19)	39H2
TU(L80-L89)	35H2
TU(L80A-L89A)	35H2
TU(L80B-L89B)	35H2

DRAWING ISSUE

23D	DWG ASS'Y
25D	DWG ASS'Y
27D	SAK
30D	SAK
32D	SAK
33D	6JS
35D	6JS
40D	
45D	

ISSUE 47D

LINE, LINK, AND MARKER CIRCUIT (2)

SD-65741-01-A6

BELL TELEPHONE LABORATORIES INCORPORATED

DWG AREA 65

PRINTED IN U.S.A.

SD-65741-01-A6

OPTION INDEX

APP OR WIRING	LOCATION
9	19E5, 19F5, 19G6 24A4, A5, B4, C4, C5, D4, D5, E4, E5, F4, F5, G4; 26A4, C4; 30F5, F6; 32G5, G6, H5
17	35F7
19	36C3, G4; 37D2, D3, B6, E6
20	36A-H4, E6, F6, G6
21	36E5, F6
22	9C4, 9D4, 12C7, 19E5, 19E6, 19F5, 19F6, 19G5, 19G6, 24A4, A5, B4, B5, C4, D4, D5, E4, E5, F4, F5, G4; 26A2, A4, C2, C4; 30F5, F6; 32B4, B6, E2, E3, F2, F3, G6, H5
Z	1B3, C2; 35A3, R2
Y	APP FIG. 3, IB3, D2, D3, E3, E4, F3; 3IB6, 35A3, B2, B3, E2, E8, F2, 35G3, G5
X	1G3, 35A2
W	APP FIGS. 1, 2; 1G3; 35A2
V	APP FIGS. 2, 4, 14; SHTS 2, 3, 4, 6, 7, 8A, 18 24, 31; 1D5, E5; 10G1, G3, G5, G7, G8; 11G1, G3, G5, G9; 17F8, G8; 34B1, E4
T	31F2, F3, G2, G3
S	1B5, C5, F6
R	1B5, C5, F6
Q	35E7
N	35E3
M	35G7
K	APP FIGS. 1, 2; 1D5; 3A3, C0, C3; 6C3, C8, F3, F8; 7C3, C8, F3, F8; 8A/C3, F3
H	35D3
G	APP FIGS. 1, 2; 1D5, 3A3, C0, C3; 6C3, C8, F3, F8; 7C3, C8, F3, F8; 8A/C3, F3
F	APP FIG. 2; 1D5; 3A6, C6; 6C3, C8, F3, F8; 7C3, C8, F3, F8; 8A/C3, F3
E	APP FIG. 2; 1D5; 3A6, C6; 6C3, C8, F3, F8; 7C3, C8, F3, F8; 8A/C3, F3
B	APP FIGS. 4, 7, 9, 10; 5A/H5, H6; 12C7; 16B2, B6, F2, F6; 25C1, D1, D3, D5, D8; 5A/H7
A	APP FIGS. 4, 7, 9, 10; 5A/H5, H6; 12C7; 16B2, B6, F2, F6; 25C1, D1, D3, D5, D8, 5A/H7
ZA	18E7

APP OR WIRING	LOCATION
ZB	35F6
ZC	35E6, 35F6
ZD	35A5, 35B6
ZE	35A5, B1, B5, B6, C1, G7, H8
ZF	35D4, 35E3, 35E4
ZG	35D3, 35E3
ZH	25E1, 25E6
ZI	25E1, 25E6
ZJ	31B7, 31C2, 31D3, 31D4, 31F1, 31F2
ZK	31B7, 31C2, 31D3, 31D4, 31F1, 31G1
ZL	12D1, 12F4
ZM	12C1, 12D1, 12F4
ZN	APP FIG. 9, 22A0, 22A1, 22A3, 22B2, 22B3, 22C0, 22C1, 22C3, 22D2, 22D3, 22E1, 22E3, 22G6, 22G7, 22H1, 22H5, 23A2, 23B2, 26A2, 26C2, 32B6, 32B7, 32E2, 32F2, 32F3
ZO	APP FIG. 9, 22A0, 22A1, 22A2, 22A3, 22B2, 22B3, 22C0, 22C1, 22C3, 22D2, 22D3, 22E1, 22E3, 22G6, 22H2, 23A2, 23B2, 23B3, 23C3, 32B4, 32B6, 32E2, 32E3 32F2, 32F3
ZP	1D6, 35C5
ZQ	1D6, 35C5
ZR	APP FIGS. 1, 2, 1G3, 35A2
ZS	35D4, 35E3, 35E4

APP OR WIRING	LOCATION
ZT	APP FIG. 3, 1D1, 35E0
ZV	APP FIGS. 13, 14, IA6, D6, E5; 35B5, B7, H5
ZW	APP FIG. 12, IA6, D6, E5
ZX	APP FIGS. 13, 14, IA6, B7, D6, E5; 35B5, B7, H5
ZY	APP FIG. 12, IA6, B7, D6, E5
ZZ	APP FIGS. 12, 13
YA	APP FIGS. 12, 13
YB	12B3, 12F2, 19G7
YC	12B3, 12F2, 19G7, 28G4, 28G6
YD	1F7, IF8, 35G7, 35H7
YE	10G0
YF	10G2
YG	APP FIG. 1.8A/D0
YH	35C7
YJ	APP FIG. 1, 35C6
YK	25E3, 25E8, 25G5, 25H5
YL	25E3, 25E8, 25G5, 25H5
YM	APP FIG. 4, 3F2, 3F3, 3F4, 3F5, 3F6, 3F7, 3F8

APP OR WIRING	LOCATION
YN	APP FIGS. 1, 6; 5B/D3, F3
YO	10G3
YP	10G5
YQ	19E1
YR	19D1, 19E1
YS	7A8, 34D6, 34F6
YT	6B3, 7A8, 19G2, 19F5, 34D6, 34D6, 34F6
YV	2A1, C0; 4F8; 8A/B3, E3; 11F6, F8; 18E6; 23F7, G7
YW	2B1, 2D0, 11F6, 11F8, 18E6
YX	5A/F3, G3, H3; 8A/B7, C7, C8
XA	APP FIG8, 16B3, 16C3, 16C4, 16B5, 16D1, 16D3, 16D4, 16F3, 16F5, 19D2, 19E2
XB	16B5, 16E5, 19E2, 19F5
XC	5A/D3; 35B3, B7, C3, D3, E6
XD	APP FIG. 1; 5A/B3, D3; 35C3-H5
XE	35H5
XF	22E5, 22E6
XG	9B5, 9D5, 10C0, 10C2, 10C4, 10C6, 10C8, 11C0, 11C2, 11C4, 11C6, 11C8, 20B2, 20B7, 20E2, 20E7, 2CG2, 20G7, 21C3, 21F2
XH	9C4, 9D4, 10C0, 10C2, 10C4, 10C6, 10C8, 11C0, 11C2, 11C4, 11C6, 11C8, 20B2, 20B7, 20E2, 20E7, 20G1, 20G2, 20G7, 21C3, 21F0, 21F2
XJ	16B4, 16B5, 16E4, 16E5
XK	1E7, 9F7, 16B4, 16B5, 16E3, 16E4, 16E5, 16H1, 17H4, 19E3, 19E4, 26B4, 26D4, 35F5
XO	1F5, 9B0, 9C0, 35G6
XP	1F5; 6B2, B7, E2, E7; 7B2, B7, E2, E7; 8A/B1, E1; 9B0, C0; 12C2, E2; 19H4; 35G6
XQ	19G4

APP OR WIRING	LOCATION
XR	19G4
XU	2B7, 2C7
XV	APP FIG. 8, 9G8, 9G9, 2B7, 2C7
XW	APP FIG. 3, IB2, IB3, ID2, ID3, ID4, IE3, IE4, IG0, IG2, IH2, 35A3, B2, B3, E2, F2; 3IA6, 35G3
XX	APP FIG 3, IB3, D2, D3, D4, E3, E4, IG0, IG2, IH2, 3IB6
XY	35D9
XZ	16D4
WA	16D4
WB	21E1, 21E2,
WC	19F5, 19F6, 19G5, 19G6, 21E1, 21E2, APP FIG. 1
WD	12B3, 12G3
WE	5A/H5, H6
WF	5A/H5; 7H3; 25E1, E6; 35H6; 36A2, A3, B3, C0, C3, D3, E2, E3, F3, G3
WG	24A4-F4, 24G5-H5
WH	1B6, 35B6, 35C6
WI	35B6
WJ	18H5, 23D4, 40F0
WK	36D0
WL	19E3, 19E4
WM	19E1, 19D4, 19E3, 19E4
WN	35D8
WP	35E3, 35F3
WQ	35E3, 35F3
WR	9F3, 20A-H3, 20A-H9, 20B6, 21A-F4, 34H7, 35E4, 35F4, 38B4
WS	APP FIG. 8, 11, 9C7, 9C8, 9D7, 9D8, 15C1, 15D1, 15C3, 15D3, 16B3, 16B5, 16C4, 16G4, 16E3, 16E5, 32F5, 32G5
WT	APP FIGS. 7, 8, 11, 9C7, C8, D7, D8; 10C0, C2, C4, C6, C8; 11C0, C2, C4, C6, C8; 16B3, B5, C4, G4, E3, E5; 32A1, B1, D1, F5, F6, G5, G6; 33B4, B5, 33B9, 36A3, D0, 39B3, E5, G5
WU	16A4, A5, D3, D4, D5; 32A1, B1, G6; 40C0, D0
WV	1E7; 16A3, A4, A5, D3, D5, H1; 32A1, B1; 35F5; 40C0, D0
WW	APP FIG. 6, 7, 9, 22, 15E1, 15E2, 15F1, 15F2, 15G1, 15G3, 15H1, 15H3
WX	APP FIG. 6, 7, 9, 22, 9B4, 9D4, 12A1, 12H1, 15E1, 15E2, 15F1, 15F2, 15G1, 15G2, 15H2

APP OR WIRING	LOCATION
WY	APP FIG. 8, 6C1, 15H1, 15H5 26F7, 26F8, 26G8, 26H7
WZ	APP. FIG. 8, 6C1, 15H1, 15H2, 15H5, 15H6, 26F7, 26F8, 26G7, 26G8
VA	APP. FIG. 3, IB3, ID2, ID3, ID4, IE1, IE2, IE3, IE4, IGQ IG2, IH2, 3IA6, 35A3, 35B0, 35B2, 35B3, 35D8, 35E2, 35F1, 35F2, 35G3, 35G5
VB	APP. FIG. 3, IB3, ID2, ID3, ID4, IE1, IE2, IE3, IE4, IGQ IG2, IH2, 3IB6, 33B8
VC	35B5, 35C5
VD	35B5, 35C5
VE	35D8
VF	35D7, 35E7
VG	APP. FIG. 1, 2, 4C0, 4C3, 4E0, 4F0, 4G0, 4H0, 3IC0, 3ID0, 3IE0
VH	APP. FIG. 1, 2, 4B0, 4B3, 4C0, 4C3, 4D0, 4E0, 4G0, 4H0, 3IB0, 3IC0, 3ID0
VI	APP. FIG. 2, 4E3, 4F3, 4G3, 4H3, 3IF0
VJ	APP. FIG. 2, 4D3, 4D5, 4E3, 4G3, 4H3, 3IE0, 3IF0
VK	APP. FIG. 4, 3F2, 3F3, 3F4, 3F5, 3F6, 3F7, 3F8
VL	APP. FIG. 7, 8, 15F1, 15G0, 15H0, 17F4, 17G4
VM	APP. FIG. 7, 8, 12B3, 12G2, 15F1, 15H0, 17F4, 17G4
VN	34G6, 35E6, 35F5, 35H6, 38D3, 38D8, 38G3, 38G8, 39C3, 39C8, 39F3, 39F8
VO	APP. FIG. 11, 33B8
VP	APP. FIG. 11, 33B8
VQ	APP FIG. 7, 10, 14C5, 14D7, 15C6, 15E6, 16C3, 16D3, 16G2, 16G3, 17D1, 17E1, 23F0, 23H4, 25A/A0-H9, 26A0, 26D0
VR	APP FIG. 4, 7, 10; 5A/H6, H7; 14C5, D7; 15C6, E6; 16B2, B6, C4, D2, D3, D4, F3, F6, G3, G4; 17D1, E1; 23F0, H4; 25A/A0-H9; 25B/B3, D6; 26A0, D0; 5A/H5
VS	APP FIG. 7, 25A/E4, 25A/E9
VT	25A/B1, 25A/B6
VU	25A/B1, 25A/B6
VV	APP FIG. 7, 8, 14D0, 14D3, 14G0, 14G3, 15C2, 15C3, 15D2, 15D3, 15E2, 17B1, 17B2, 19D1
VW	APP FIG. 7, 8, 15C2, 15C3, 15D2, 15D3, 15E2, 17A1, 17B1, 17B2 17C1, 17C2, 19D1

APP OR WIRING	LOCATION
VX	1B5, 1B6, 1C5, 1C6, 1F5, 1F6, 1F7
VY	1B5, 1D5, 1F6
VZ	APP FIG 3, 1E4, 35F2
UA	2A2
UB	5B/B2, D1, E1, E7; 6G2; 7D2; 35E3
UC	APP FIG. 4, 5B/A1-D3, 6G2, 6G3, 7D2, 7D3, 8A/E1, 35E3, 35E4
UD	APP FIG. 4; 8A/A1, 8A/B1
UE	APP FIG. 4; 7E5, 7E6
UF	APP FIG. 4; 7A6
UG	APP FIG. 4; 7D1, 7E1
UH	APP FIG. 4; 7A1
UI	APP FIG. 8; 2B7, 2C7, 9G8, 9G9
UJ	38C1, 38C6, 38E1, 38F6, 39C1, 39C6, 39E1, 39F6
UK	38B3, 38B8, 38D3, 38E8 39B3, 39B8, 39F1, 39F6
UL	5AF2, 5AG2, 5AH2, 8AB7, 8AB7, 8AC7

DRAWING ISSUE SUPER-SEDES ISS 29G

30D RJK PJS GFN HW

31D PMK PJS RHP HW

32D JJR SAK RHP HW

33D FBD PJS RHP HW

35D FBD PJS RHP

36B ROZ PJS LDJ

37B ROZ PJS LDJ

38D ROZ PJS LDJ

39B ROZ PJS LDJ

40D

41B

42B

43B

44AC

45D

ISSUE 53D

LINE, LINK, AND MARKER CIRCUIT

SD-65741-01-A7

BELL TELEPHONE LABORATORIES INCORPORATED

DWG SIZE 6S

PRINTED IN U.S.A.

TABLE I

RELAY CONTACT	ASSOCIATED S-LEAD DESIGNATION				
	TM3	TM4	TM5	TM6 (V)	TM7 (V)
1M	S30	S40	S50	S60	S70
2M	S31	S41	S51	S61	S71
3M	S32	S42	S52	S62	S72
4M	S33	S43	S53	S63	S73
5M	S34	S44	S54	S64	S74
7M	S35	S45	S55	S65	S75
9M	S36	S46	S56	S66	S76
10M	S37	S47	S57	S67	S77
11M	S38	S48	S58	S68	S78
12M	S39	S49	S59	S69	S79

FS I
STATION LINE

SHEET NOTES:

1. RELAYS (AT) AND (ATA) ARE NORMALLY OPERATED EXCEPT DURING POWER FAILURES.
2. FOR Y OPTION, MON 2-7 AND CO 30-79 RELAYS ARE LOCATED AT THE SWITCHBOARD. FOR XW AND XX OPTIONS, MON A,B,C AND CO 30-79 RELAYS ARE LOCATED IN LINE CO UNIT IN APP. CAB. FR GROUND DESIGNATES SWITCHBOARD FRAME GROUND.

ALM TRANS AND TST CKT
TST LINE
R T

(ZW,ZY) LHM60-79
(ZV,ZX) LHM30-59
BL30-79 TO CORDLESS POSITION CKT
L3-7
2T,4 5
1T,3 (WH)
PROVIDED ON (ZY, ZX) ONLY
PROVIDED ON LINE 39 ONLY

TO STATION LINE OR LINE OR TRUNK ACCESS CIRCUIT

(Z) Y, XW,XX,VA,VB
(VY,S) (R,VX)
TWO WAY C.O. TRUNK CKT
TO CENT. OFF.
ATA AT
ALARM, TRANSFER & TEST CKT (SEE NOTE 1)
TO LINKS 27HO

TO MESSAGE WAITING SERVICE KEY, INTERRUPTER AND POWER SUPPLY CIRCUIT
1B,1 2B,2 (ZW,ZY) LHM60-79 (ZV,ZX) LHM30-59
(ZQ) (ZP)
3RT (E,F) L60-79
LTI 500 (G,K) L30-59
L3-7 -48
(ZW,ZY) LHM60-79
(ZV,ZX) LHM 30-59
(XK,WV)
-48 L3-7 L R 900 S

MESSAGE REG CKT
LINE
M

FR GRD 1 2
(ZT) L30-79
4 5 3
ZT
(VA,VB)
SL T R S
552A, 552B, 552D, 552E, 605A, 607A, 607B, 608A, JACK CIRCUIT, OR 608D JACK AND LAMP CIRCUIT
(VA,VB) (XW,XX)

48 3 (Y) C030-79
(XW,VA) C030-59
(XX,VB) C060-79
47 3 (Y) C030-79
(XX,VB) C060-79
(XW,VA) C030-59
(Y) C030-79
(SEE NOTE 2)
(VZ) 4RB P-3000 L3-7 -48
S 100 4RT
(Y,XW,XX,VA,VB)

2B 1
(XW,VA) MON A,B
(XX,VB) MON C
(Y) MON3-7
a SEE TABLE A

(Y) C030-79 1 2T AP
(XW) C030-59
(XX) C060-79

(XG) (XP) SA S IR(A-J) IN. RESTRICTION CKT
(R,VX) (VY,S) SI S AT ALARM, TRANSFER & TEST CKT (SEE NOTE 1)
DISCONNECT FOR UNASSIGNED STATION LINE
(YD) SI S
10G1, 10G3, 10G4, 10G6, 10G8, 11G1, 11G3, 11G4, 11G5, 11G9 (SEE TABLE 1)
STATION UNITS
STATION TENS GROUP 3-7

(Y) MON2-7 (SEE NOTE 2)
-48 R TRP0,1 6 MI (Y) L U 2500 AP 2
-48 R TP2-5 6
-48 R (V) TP6,7 6
-48 R RO,1 7
(XX,XW,VA,VB)

H (W,ZR) SEE NOTE 302 (X)
H-0 H-1 H-2 H-3 H-4 H-5 H-6 H-7 H-8 H-9
STATION TENS GROUP 3-7
6D0, 6D5, 6G0, 6G5, 7D0, 7D5, 7G0, 7G5, 8A/D0, 8A/G0

(XW,VA) MON A,B
(XX,VB) MON C
AP U L 700 1

MB 2Y 15E-3 IND OR EQUIV
STATION EQUIP.
MB 60178 OR EQUIV L KEY
-48 L3-7 SI S 6 5 1 2 L3-7

TABLE A

CO-RELAY	(Y) MON 3-7 a	(XW,VA) MON A,B (XX,VB) MON C EVEN CO-TENS GRP. a	ODD CO-TENS GRP. a
CO-0	1	1	11
CO-1	2	2	12
CO-2	3	3	13
CO-3	4	4	14
CO-4	5	5	15
CO-5	6	6	16
CO-6	7	7	17
CO-7	8	8	18
CO-8	9	9	19
CO-9	10	10	20

REL DESIG	EQUIP LOC
L30-39	2L
L40-59	3L
L60-79	4L
MON 2-7	SEE
CO 30-79	NOTE 2

DRAWING ISSUE

1	W.S.	
2B	W.S.	
3B	J.F.D.	
5D	R.A.C.	
8B	W.S.	A
9B	P.D.	
12B	P.O.B.	
13D	P.O.B.	
15B		HO
18A		
21B		B
24D	S.A.K.	HWS
	K.F.J.	HW
25D	S.A.K.	
	K.F.J.	
27D	S.A.K.	PMT
	S.F.H.	
30D	S.A.K.	
	G.F.H.	C
31D	F.M.Q.	
	P.U.S.	
	R.H.P.	
WORN DRAWING REPRODUCED WITHOUT CHANGE 11-28-66 T.E.F.		
32D	E.W.E.	D
	S.A.K.	
	R.H.P.	
33D	F.E.D.	
	P.U.S.	
	R.H.P.	
35D	F.E.D.	
	P.U.S.	
	R.H.P.	
37B	R.O.Z.	
	P.U.S.	
	L.D.J.	
43B		
44AC		

ISSUE 46D DR

LINE, LINK, AND MARKER CIRCUIT (2) SD-65741-01-BI

BELL TELEPHONE LABORATORIES INCORPORATED 6S

PRINTED IN U.S.A.

SD-65741-01-BI

PART OF FS 2

TENS SELECTION

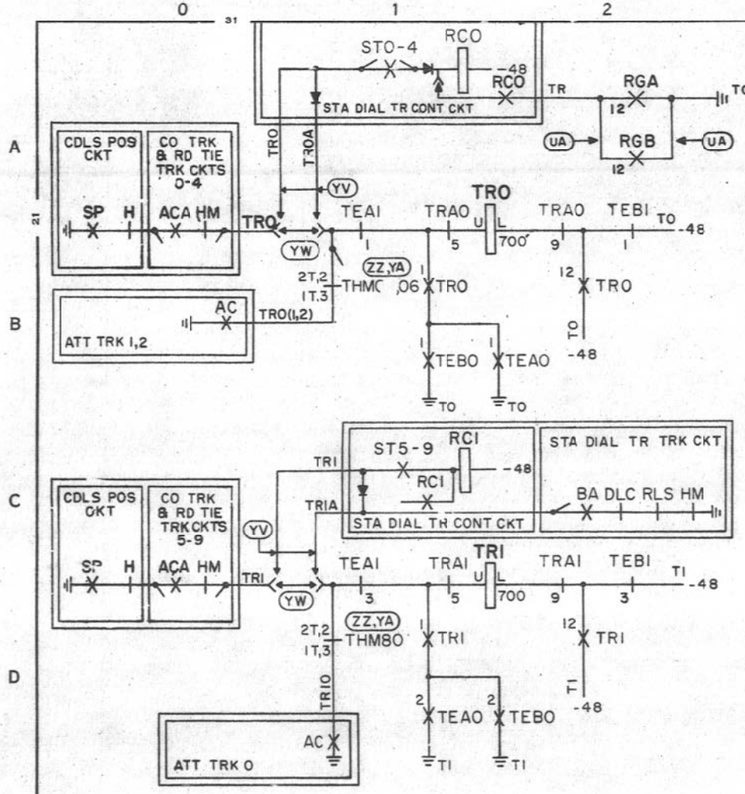

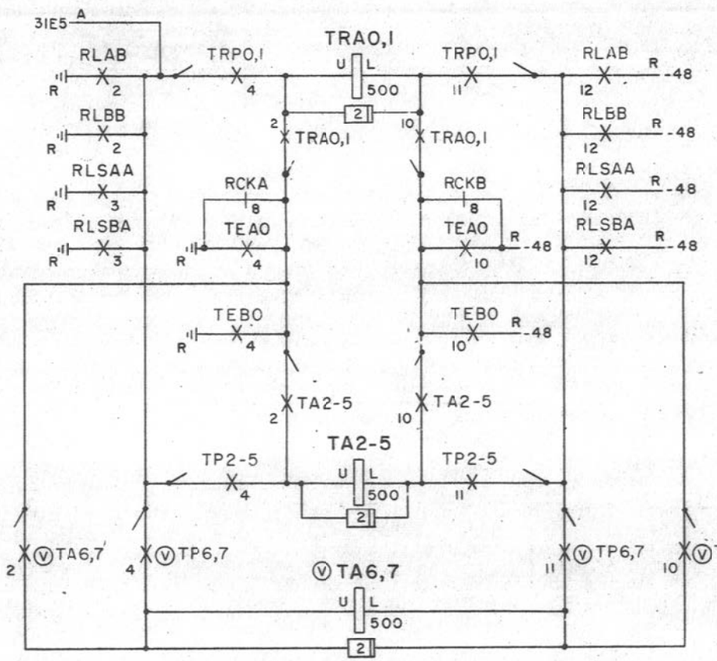

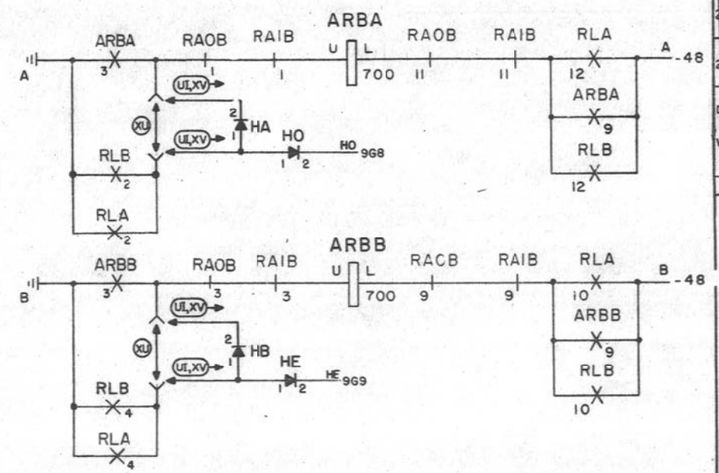

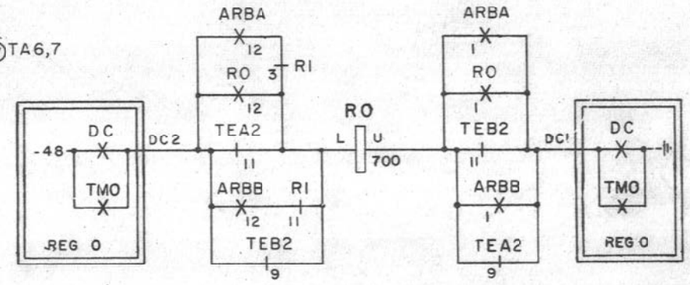

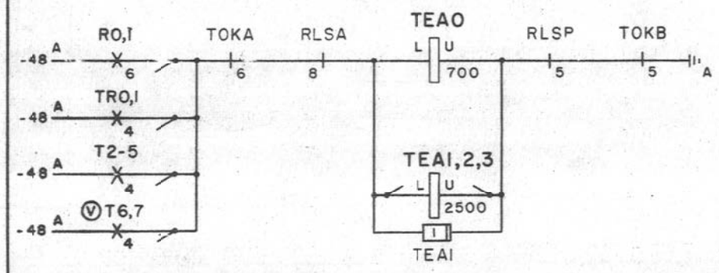

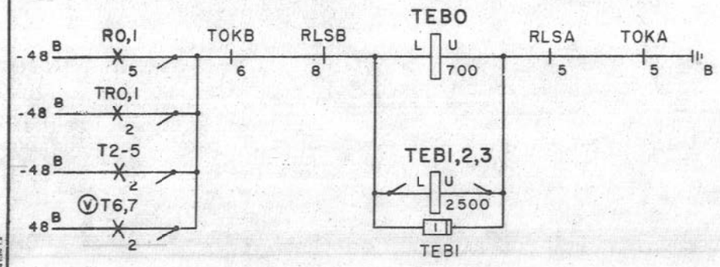

REL DESIG	EQUIP LOC	REL DESIG	EQUIP LOC
ARBA	6AB	TEB3	6AA
ARBB	6AA	TOKA	6K
RO	6AA	TOKB	6J
RI	6AA	TP2-5	6Z
RAOB	6G	TP6,7	6Z
RAIB	6G	TRAO	6AB
RLA	6T	TRAI	6AB
RLAB	6T		
RLB	6S		
RLBB	6S		
RLSA	6K		
RLSAA	6K		
RLSB	6J		
RLSBA	6J		
T2-5	6AA		
T6,7	6AA		
TA2-5	6AB		
TA6,7	6AB		
TEAO	6AB		
TEAI	6AB		
TEA2	6AB		
TEBO	6AA		
TEBI	6AA		
TEB2	6AA		

DRAWING ISSUE

1	
2B	
7D	
11B	
6B	
23D	
26AC	

WORN DRAWING REPRODUCED WITHOUT CHANGE 8-27-55

45D

ISSUE 50B

LINE, LINK, AND MARKER CIRCUIT

SD-65741-01-B2

BELL TELEPHONE LABORATORIES INCORPORATED

6S

PRINTED IN U. S. A.

SD-65741-01-B2

PART OF FS 2
TENS SELECTION

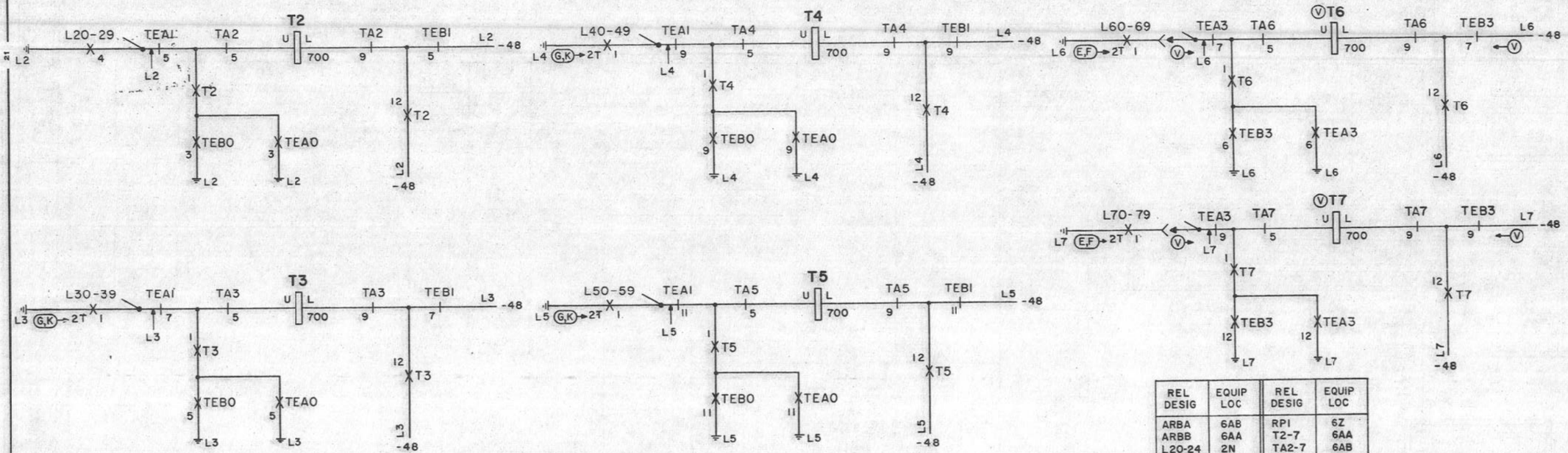

REL DESIG	EQUIP LOC	REL DESIG	EQUIP LOC
ARBA	6AB	RPI	6Z
ARBB	6AA	T2-7	6AA
L20-24	2N	TA2-7	6AB
L25-29	2P	TCKI-4	6Z
L30-39	2L	TEAO-3	6AB
L40-59	3L	TEBO-3	6AA
L60-79	4L	TP2-7	6Z
RO	6AA	TRO	6AB
RI	6AA	TRI	6AA
RLAA	6T	TRPO	6Z
RLBA	6S	TRPI	6Z
RPO	6Z		

FS 3
TENS PREFERENCE CHAIN

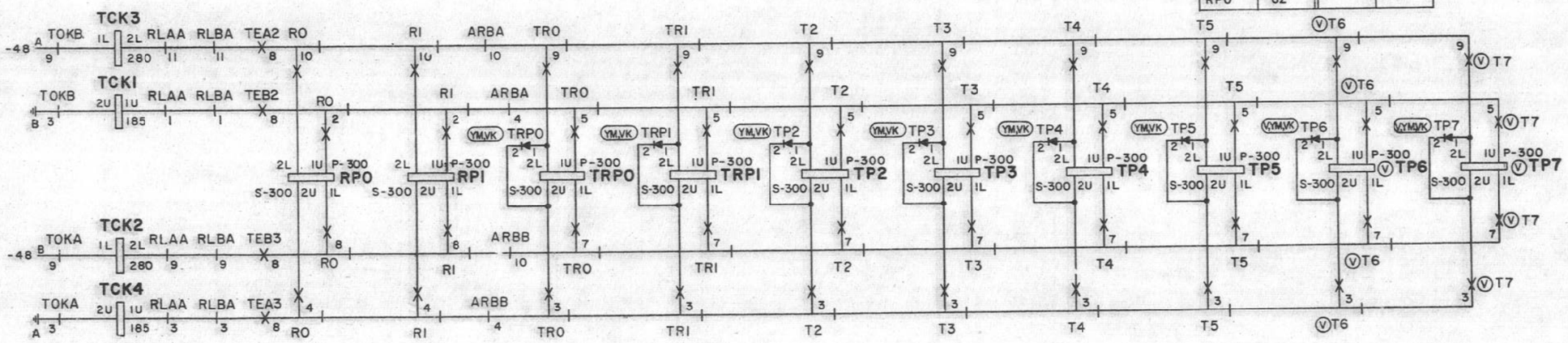

SHEET NOTES
A. LEAD DESIGNATIONS INDICATED BY ARROWS APPLY TO LEADS BETWEEN MARKER UNITS

DRAWING ISSUE	
1	AC MK
2B	AK PJ
3B	JD RC
5D	KF DHD
19B	EG WTH PD
	ROZ
37B	RJS LDJ

LINE, LINK AND MARKER CIRCUIT (2)

BELL TELEPHONE LABORATORIES INCORPORATED

37

SD-65741-01-B3

SD-65741-01-B3

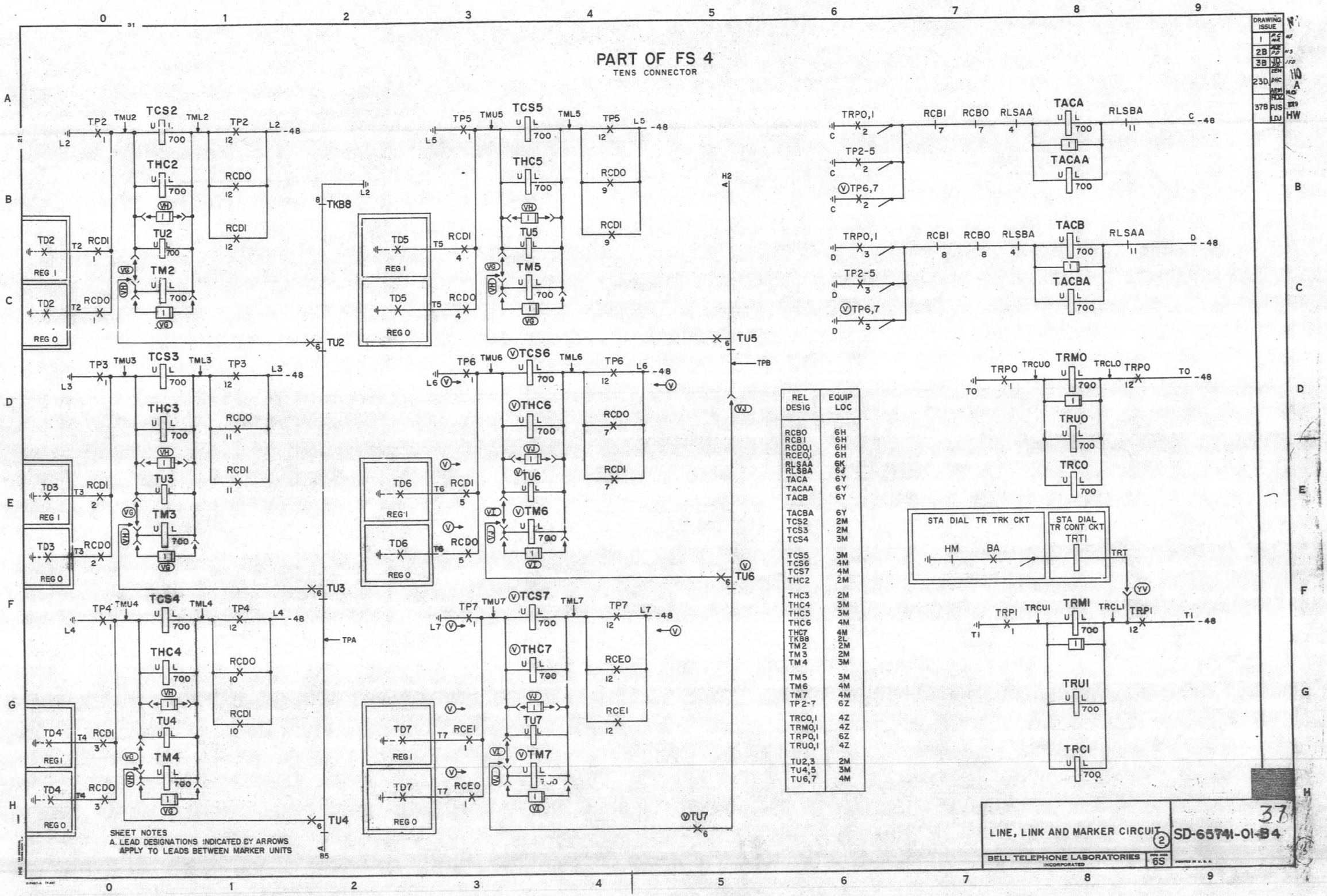

REL DESIG	EQUIP LOC
RCBO	6H
RCBI	6H
RCDO,I	6H
RCEO,I	6H
RLSAA	6K
RLSBA	6J
TACA	6Y
TACAA	6Y
TACB	6Y
TACBA	6Y
TCS2	2M
TCS3	2M
TCS4	3M
TCS5	3M
TCS6	4M
TCS7	4M
THC2	2M
THC3	2M
THC4	3M
THC5	3M
THC6	4M
THC7	4M
TKB8	2L
TM2	2M
TM3	2M
TM4	3M
TM5	3M
TM6	4M
TM7	4M
TP2-7	6Z
TRCO,I	4Z
TRMO,I	4Z
TRPO,I	6Z
TRUO,I	4Z
TU2,3	2M
TU4,5	3M
TU6,7	4M

SD-65741-01-B4

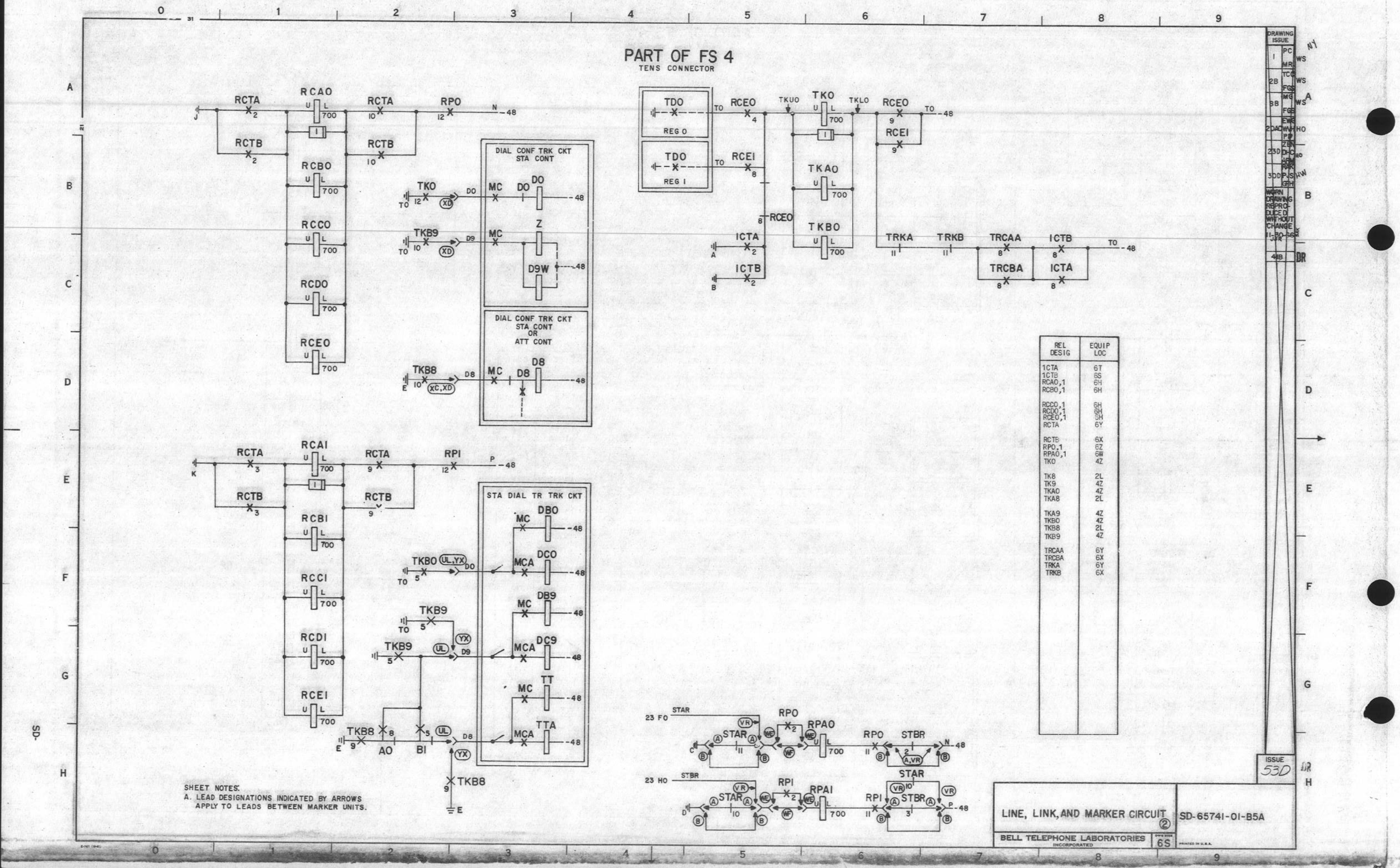

REL DESIG	EQUIP LOC
1CTA	6T
1CTB	6S
RCAO,1	6H
RCBO,1	6H
RCCO,1	6H
RCDO,1	6H
RCEO,1	6H
RCTA	6Y
RCTB	6X
RPO,1	6Z
RPAO,1	6W
TKO	4Z
TK8	2L
TK9	4Z
TKAO	4Z
TKA8	2L
TKA9	4Z
TKBO	4Z
TKB8	2L
TKB9	4Z
TRCAA	6Y
TRCBA	6X
TRKA	6Y
TRKB	6X

PART OF FS 4

TENS CONNECTOR

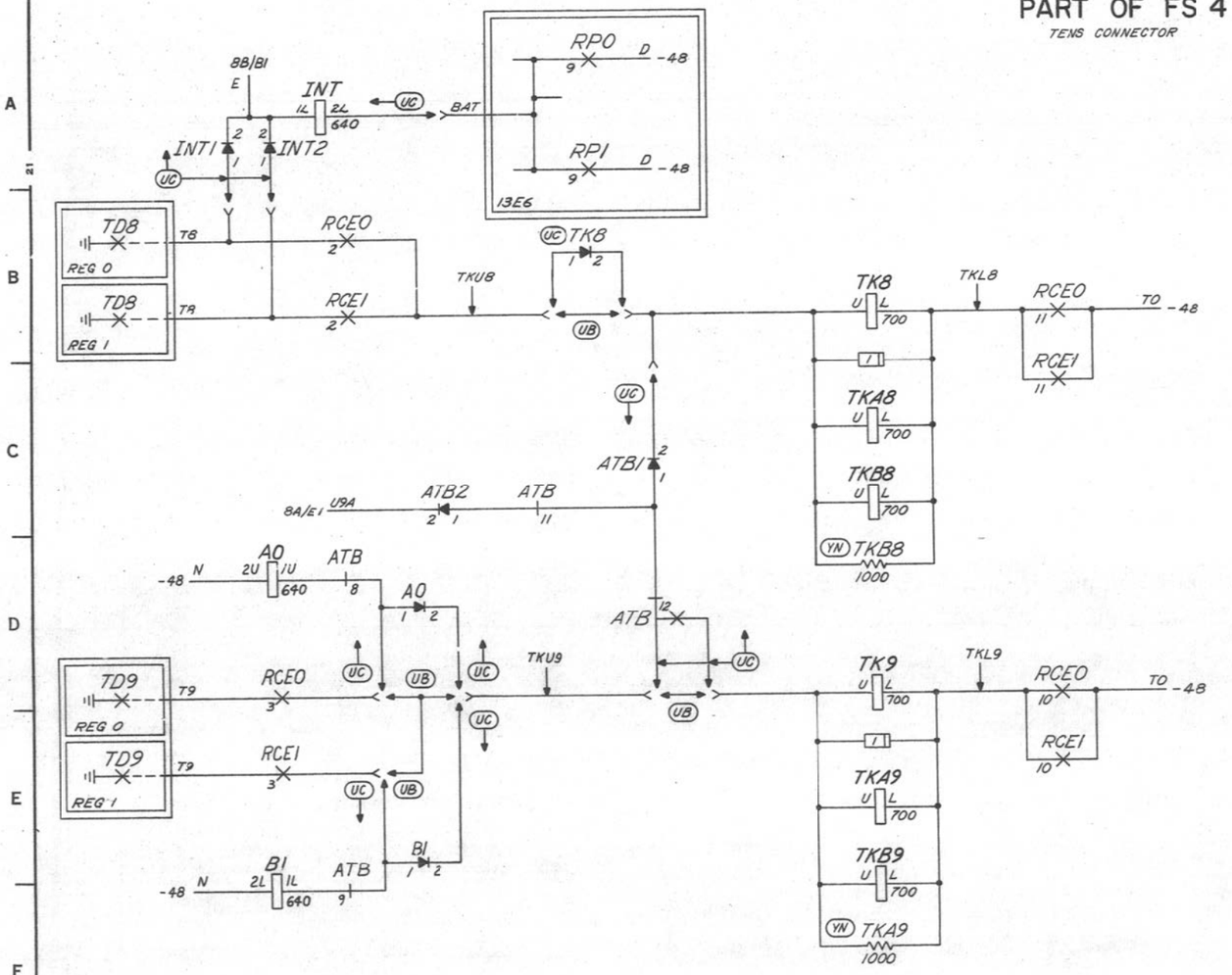

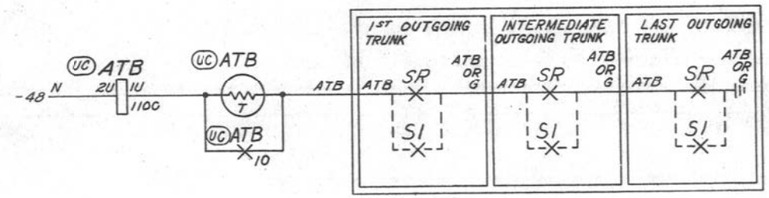

RELAY DESIG	EQPT LOC
AO	-
ATB	-
B1	-
INT	-
RCEO	6H
RCE1	6H
TK8	2L
TK9	4Z
TKA8	2L
TKA9	4Z
TKB8	2L
TKB9	4Z

ISSUE 48B DR

LINE, LINK, AND MARKER CIRCUIT

SD-65741-01-B5B

BELL TELEPHONE LABORATORIES INCORPORATED

DWG SIZE 6S

PRINTED IN U.S.A.

SD-65741-01-B5B

PART OF FS 5

UNITS SELECTION

REL DESIG	EQUIP LOC
BTCA	6T
BTCB	6S
HCA	6Y
HCB	6Y
ICTA	6T
ICTB	6S
JTA	6Y
L20-23	2N
L30-33	2L
L40-43	3L
L50-53	3L
L60-63	4L
L70-73	4L
LUCA	6V
LUCB	6U
RCCO,I	6H
RUCA	6V
RUCB	6U
THC2;3	2M
THC4,5	3M
THC6,7	4M
TKAO	4Z
TKA8	2L
TKA9	4Z
TRUO,I	4Z
TU2,3	2M
TU4,5	3M
TU6,7	4M
U0-3	6V
ULA	6V
ULB	6U

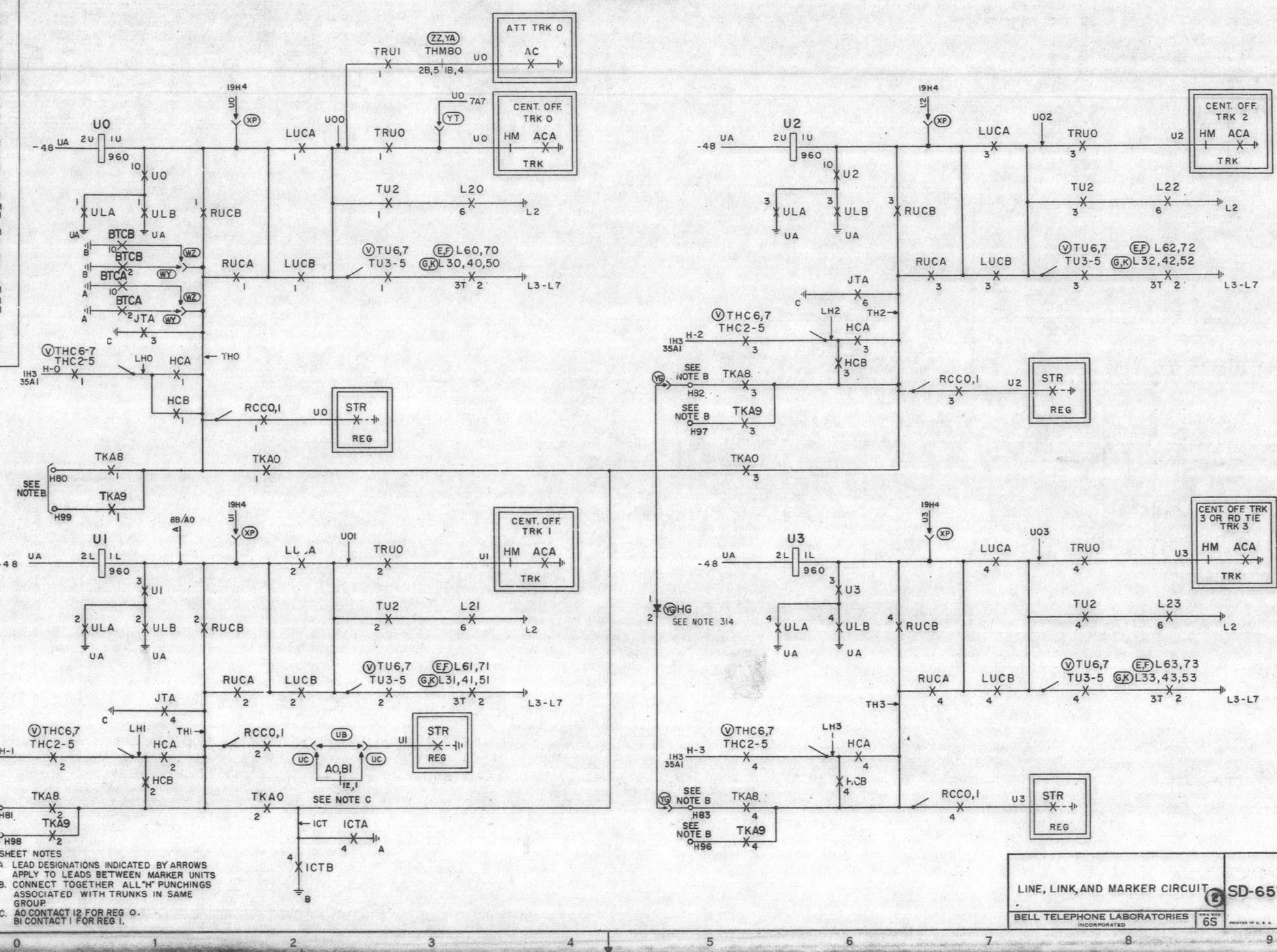

SHEET NOTES

A. LEAD DESIGNATIONS INDICATED BY ARROWS APPLY TO LEADS BETWEEN MARKER UNITS

B. CONNECT TOGETHER ALL "H" PUNCHINGS ASSOCIATED WITH TRUNKS IN SAME GROUP.

C. AO CONTACT 12 FOR REG 0.
BI CONTACT 1 FOR REG 1.

DRAWING ISSUE	
1	6S, 6T, 6U, 6V
3B	2D, 2E
5D	2K, 2L
7D	2P, 2R
6B	3K, 3L, 3M, 3N
20AC	EG, 4N, PQ
21B	FQ, 4P, PR
23D	2AK, DK, AL, WZ
25D	5AK, KL, 2AL
32D	4AK, SV, RW, RX
36B	RS, LDJ

ISSUE 48B

LINE, LINK, AND MARKER CIRCUIT

SD-65741-01-B6

BELL TELEPHONE LABORATORIES INCORPORATED

SIZE 6S

SD-65741-01-B6

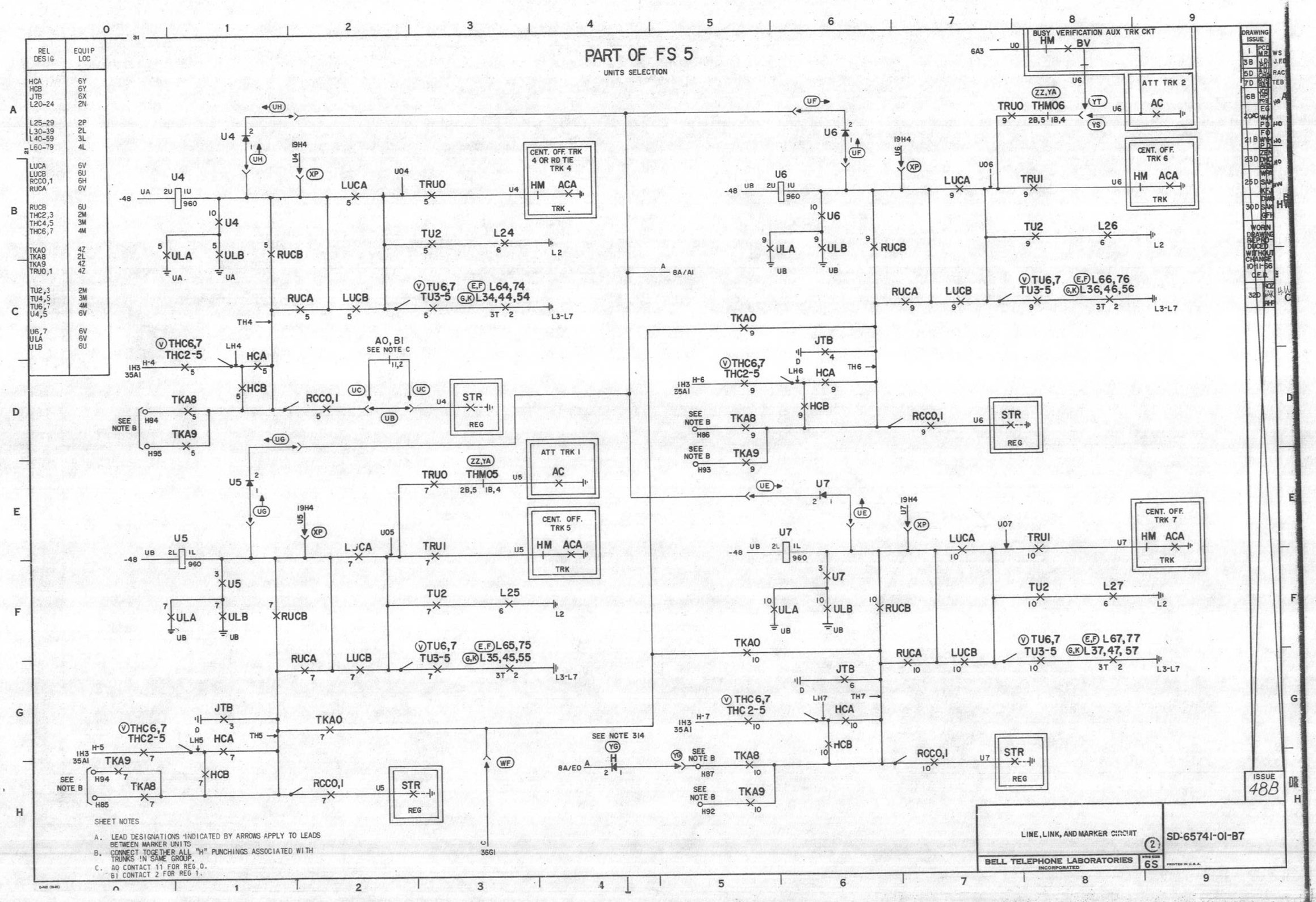
PART OF FS 5
UNITS SELECTION
REL DESIG
EQUIP LOC
HCA 6Y
HCB 6Y
JTB 6X
L20-24 2N
L25-29 2P
L30-39 2L
L40-59 3L
L60-79 4L
LUCA 6V
LUCB 6U
RCCO,1 6H
RUCA 6V
RUCB 6U
THC2,3 2M
THC4,5 3M
THC6,7 4M
TKAO 4Z
TKA8 2L
TKA9 4Z
TRUO,1 4Z
TU2,3 2M
TU4,5 3M
TU6,7 4M
U4,5 6V
U6,7 6V
ULA 6V
ULB 6U
BUSY VERIFICATION AUX TRK CKT
ATT TRK 2
CENT. OFF. TRK 4 OR RD TIE TRK 4
CENT. OFF. TRK 6
ATT TRK 1
CENT. OFF. TRK 5
CENT. OFF. TRK 7
SEE NOTE B
SEE NOTE C
SEE NOTE 314
SHEET NOTES
A. LEAD DESIGNATIONS INDICATED BY ARROWS APPLY TO LEADS BETWEEN MARKER UNITS
B. CONNECT TOGETHER ALL "H" PUNCHINGS ASSOCIATED WITH TRUNKS IN SAME GROUP.
C. AO CONTACT 11 FOR REG 0.
B1 CONTACT 2 FOR REG 1.
ISSUE 48B
LINE, LINK, AND MARKER CIRCUIT
SD-65741-01-B7
BELL TELEPHONE LABORATORIES INCORPORATED
6S
SD-65741-01-B7

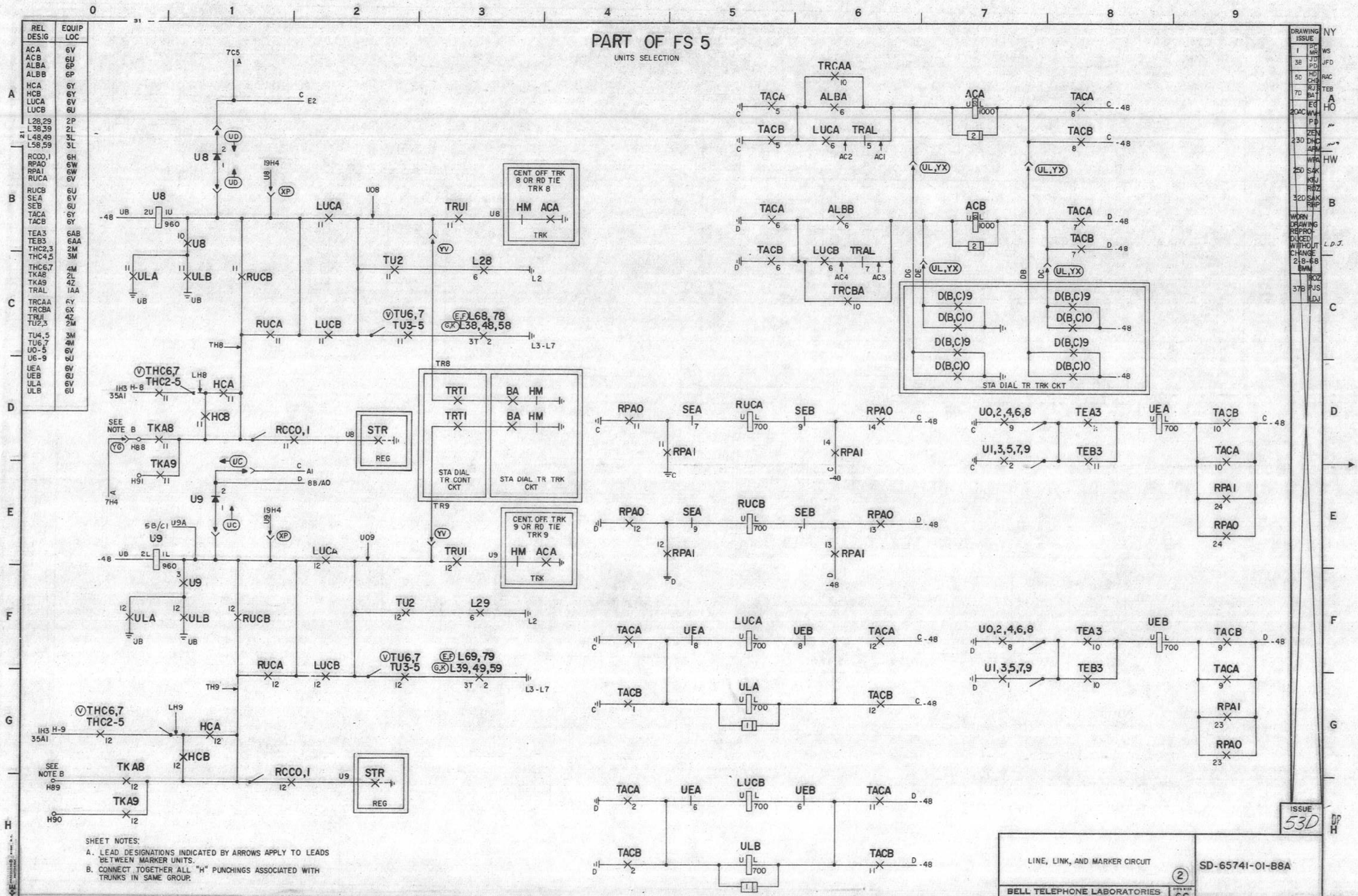
PART OF FS 5
UNITS SELECTION
REL DESIG
EQUIP LOC
ACA 6V
ACB 6U
ALBA 6P
ALBB 6P
HCA 6Y
HCB 6Y
LUCA 6V
LUCB 6U
L28,29 2P
L38,39 2L
L48,49 3L
L58,59 3L
RCCO,1 6H
RPAO 6W
RPA1 6W
RUCA 6V
RUCB 6U
SEA 6V
SEB 6U
TACA 6Y
TACB 6Y
TEA3 6AB
TEB3 6AA
THC2,3 2M
THC4,5 3M
THC6,7 4M
TKA8 2L
TKA9 4Z
TRAL 1AA
TRCAA 6Y
TRCBA 6X
TRU1 4Z
TU2,3 2M
TU4,5 3M
TU6,7 4M
U0-5 6V
U6-9 6U
UEA 6V
UEB 6U
ULA 6V
ULB 6U
CENT OFF TRK 8 OR RD TIE TRK 8
CENT. OFF. TRK 9 OR RD TIE TRK 9
STA DIAL TR CONT CKT
STA DIAL TR TRK CKT
STA DIAL TR TRK CKT
STR
REG
SEE NOTE B
SHEET NOTES:
A. LEAD DESIGNATIONS INDICATED BY ARROWS APPLY TO LEADS BETWEEN MARKER UNITS.
B. CONNECT TOGETHER ALL "H" PUNCHINGS ASSOCIATED WITH TRUNKS IN SAME GROUP.
DRAWING ISSUE
WORN DRAWING REPRODUCED WITHOUT CHANGE 2-8-68 BMM
ISSUE 53D
LINE, LINK, AND MARKER CIRCUIT
SD-65741-01-B8A
BELL TELEPHONE LABORATORIES INCORPORATED
6S

PART OF FS 5

UNITS SELECTION

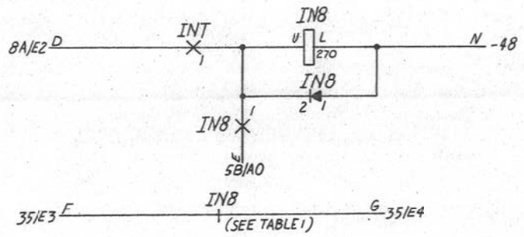

TABLE 1

IN8 RELAY CONTACT	ASSOCIATED TRUNK NUMBER
2	89
4	88
6	87
8	86
10	85
12	84

ISSUE 48B

LINE, LINK AND MARKER CIRCUIT

SD-65741-01-B8B

BELL TELEPHONE LABORATORIES INCORPORATED

SIZE 6S

PRINTED IN U.S.A.

SD-65741-01-B8B

PART OF FS 6

LINE AND TRUNK HUNTING

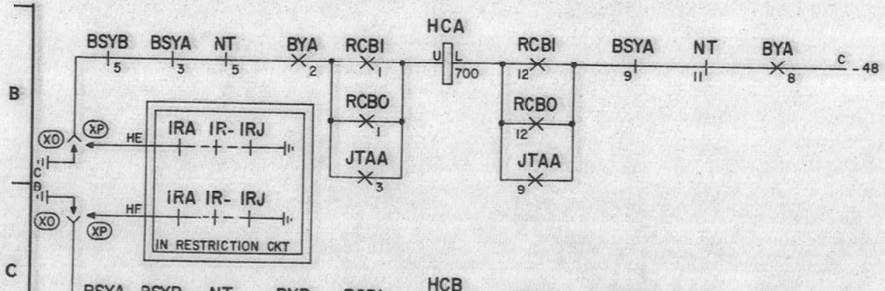

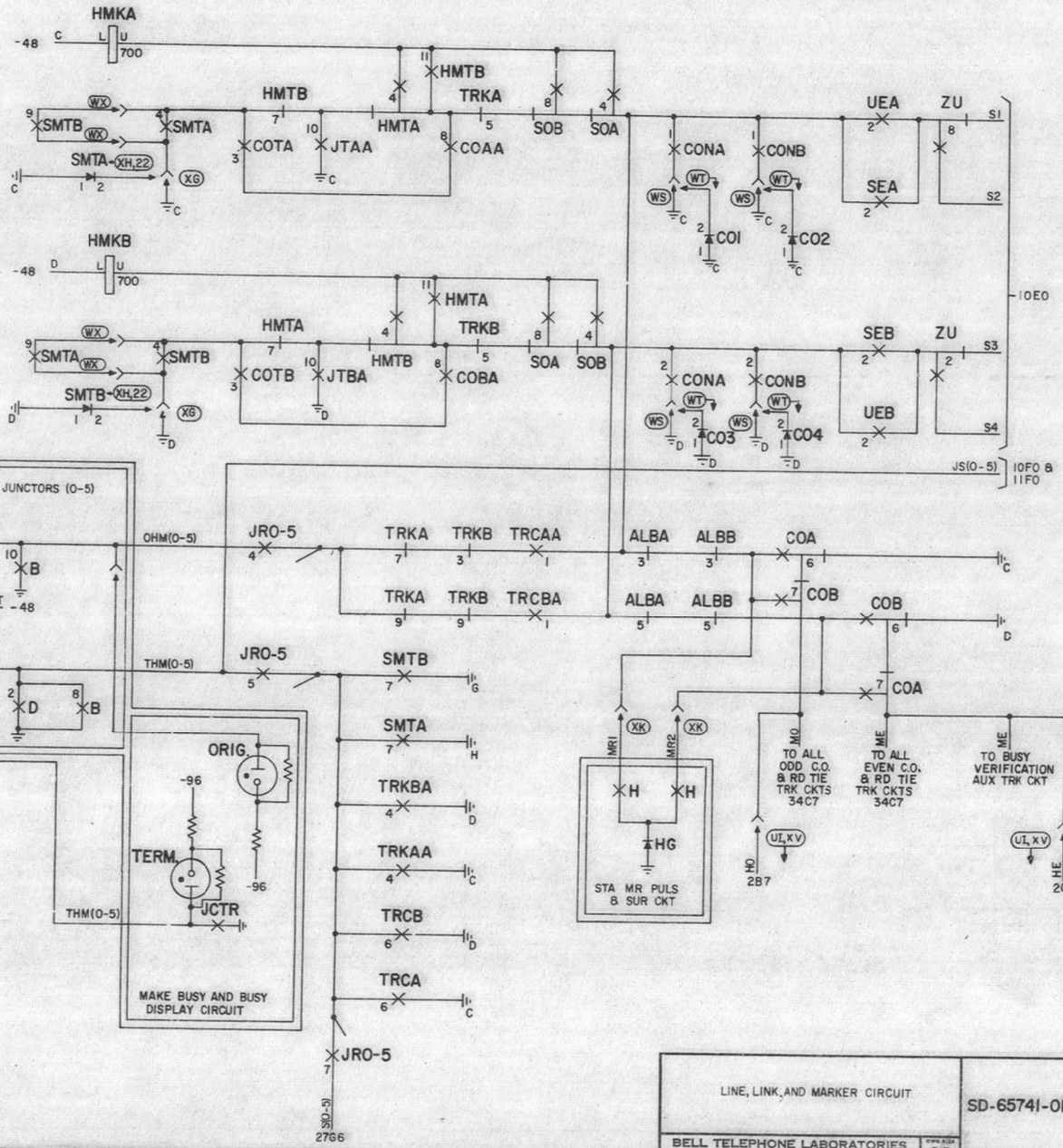

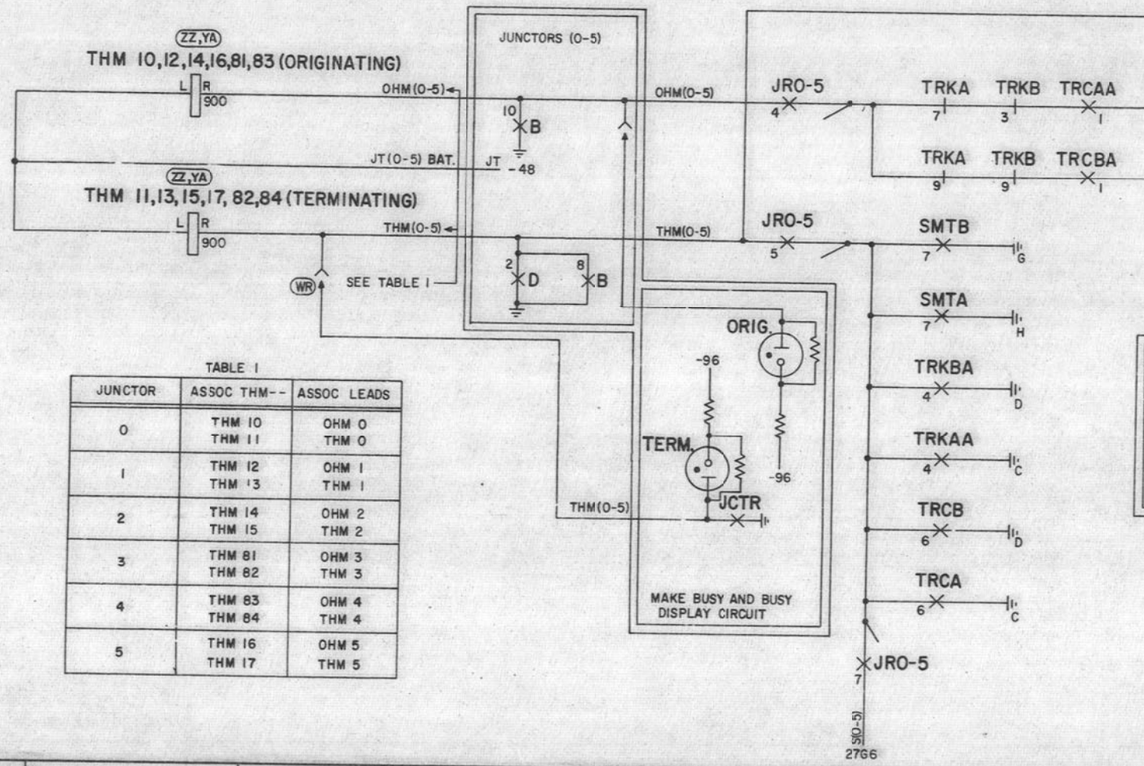

REL DESIG	EQUIP LOC	REL DESIG	EQUIP LOC
ALBA	6P	JRO-5	6X
ALBB	6P	JTAA	6Y
BSYA	6V	JTBA	6X
BSYB	6U	NT	6L,M
BYA	6V	RCBO,I	6H
BYB	6U	SEA	6V
COA	6T	SEB	6U
COB	6S	SMTA	6Q
COAA	6R	SMTB	6Q
COBA	6R	SOA	6R
CONA	6T	SOB	6R
CONB	6S	TRCA	6Y
COTA	6T	TRCAA	6Y
COTB	6S	TRCB	6X
HCA	6Y	TRCBA	6X
HCB	6Y	TRKA	6Y
HMKA	6V	TRKAA	6Y
HMKB	6U	TRKB	6X
HMTA	6T	TRKBA	6X
HMTB	6S	UEA	6V
		UEB	6U
		ZU	6L,M

TABLE I

JUNCTOR	ASSOC THM--	ASSOC LEADS
0	THM 10 THM 11	OHM 0 THM 0
1	THM 12 THM 13	OHM 1 THM 1
2	THM 14 THM 15	OHM 2 THM 2
3	THM 81 THM 82	OHM 3 THM 3
4	THM 83 THM 84	OHM 4 THM 4
5	THM 16 THM 17	OHM 5 THM 5

DRAWING ISSUE		
1	PC BA MR	WS
2B	EH PD	WS
4A	AD CH	RAC
1B	OU LHE	A POB
16B	JOS HP POB	
23D	ZEN DHC ARM	HO HW 7
24D	WPA SAK KFJ	HW
25D	WPA SAK KFJ	B
26A	GAP SAK KFJ	
31D	FMC RJS RHP	
32D	EMG SAK RHP	
33D	FED RJS RHP	C
35D	FED RJS RHP	
WORN DRAWING REPRODUCED WITHOUT CHANGE 2-26-88 K.AR		L.P.J.
36B	ROZ RJS MDJ	D

ISSUE 50B

LINE, LINK, AND MARKER CIRCUIT

SD-65741-01-B9

BELL TELEPHONE LABORATORIES INCORPORATED

SIZE 6S

SD-65741-01-B9

PART OF FS 6
LINE AND TRUNK HUNTING

SD-65741-01-BIO

REL DESIG	EQUIP LOC	REL DESIG	EQUIP LOC
BTCA	6T	TK8	2L
BTCB	6S		
JTA	6Y	TK9	4Z
JTAA	6Y	TM2,3	2M
RCAO,I	6H	TM4,5	3M
SMRA	6T	TM6,7	4M
SMRAA	6T		
SMRB	6S	TRMO,I	4Z
SMRBA	6S	UO-4	6V
SOA	6R	ZU	6L,M
SOB	6R		
SO-4	6W		
TKO	4Z		

SHEET NOTES:
A. LEAD DESIGNATIONS INDICATED BY ARROWS APPLY TO LEADS BETWEEN MARKER UNITS.

LINE, LINK AND MARKER CIRCUIT (2)

BELL TELEPHONE LABORATORIES INCORPORATED

33

SD-65741-01-BIO

PRINTED IN U.S.A.

PART OF FS 6

LINE AND TRUNK HUNTING

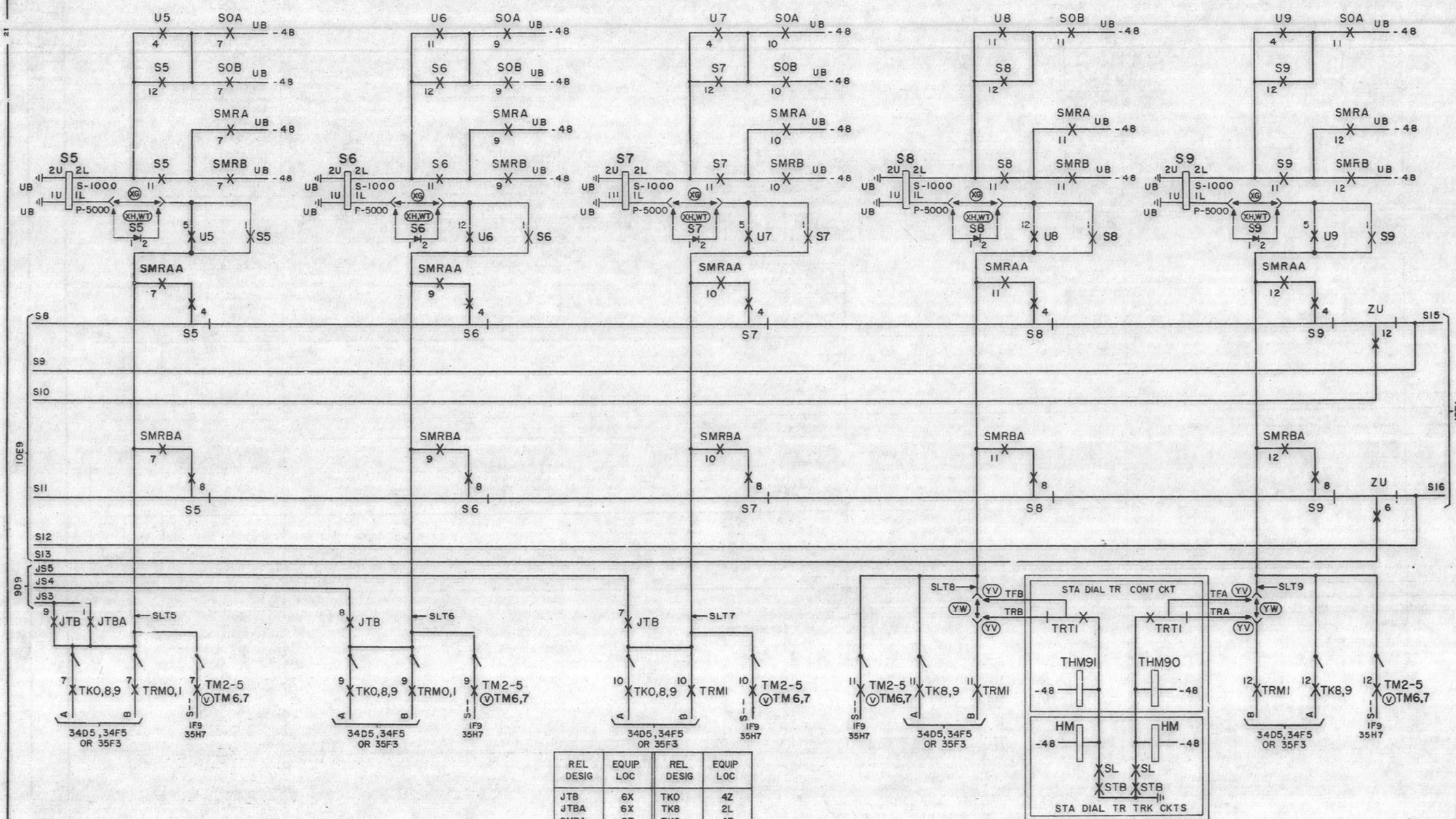

REL DESIG	EQUIP LOC	REL DESIG	EQUIP LOC
JTB	6X	TKO	4Z
JTBA	6X	TK8	2L
SMRA	6T	TK9	4Z
SMRAA	6T	TM2,3	2M
SMRB	6S	TM4,5	3M
SMRBA	6S	TM6,7	4M
SOA	6R	TRMO,1	4Z
SOB	6R	U6-9	6U
S5-9	6W	ZU	6L,M

SHEET NOTES
A. LEAD DESIGNATIONS INDICATED BY ARROWS APPLY TO LEADS BETWEEN MARKER UNITS

DRAWING ISSUE	
1	
2B	
3B	
4A	
11B	
23D	
24D	
32D	
33D	

LINE, LINK AND MARKER CIRCUIT (2)

BELL TELEPHONE LABORATORIES INCORPORATED

DWG SIZE 6S

SD-65741-01-B11

33

SD-65741-01-B11

PART OF FS 6

LINE AND TRUNK HUNTING

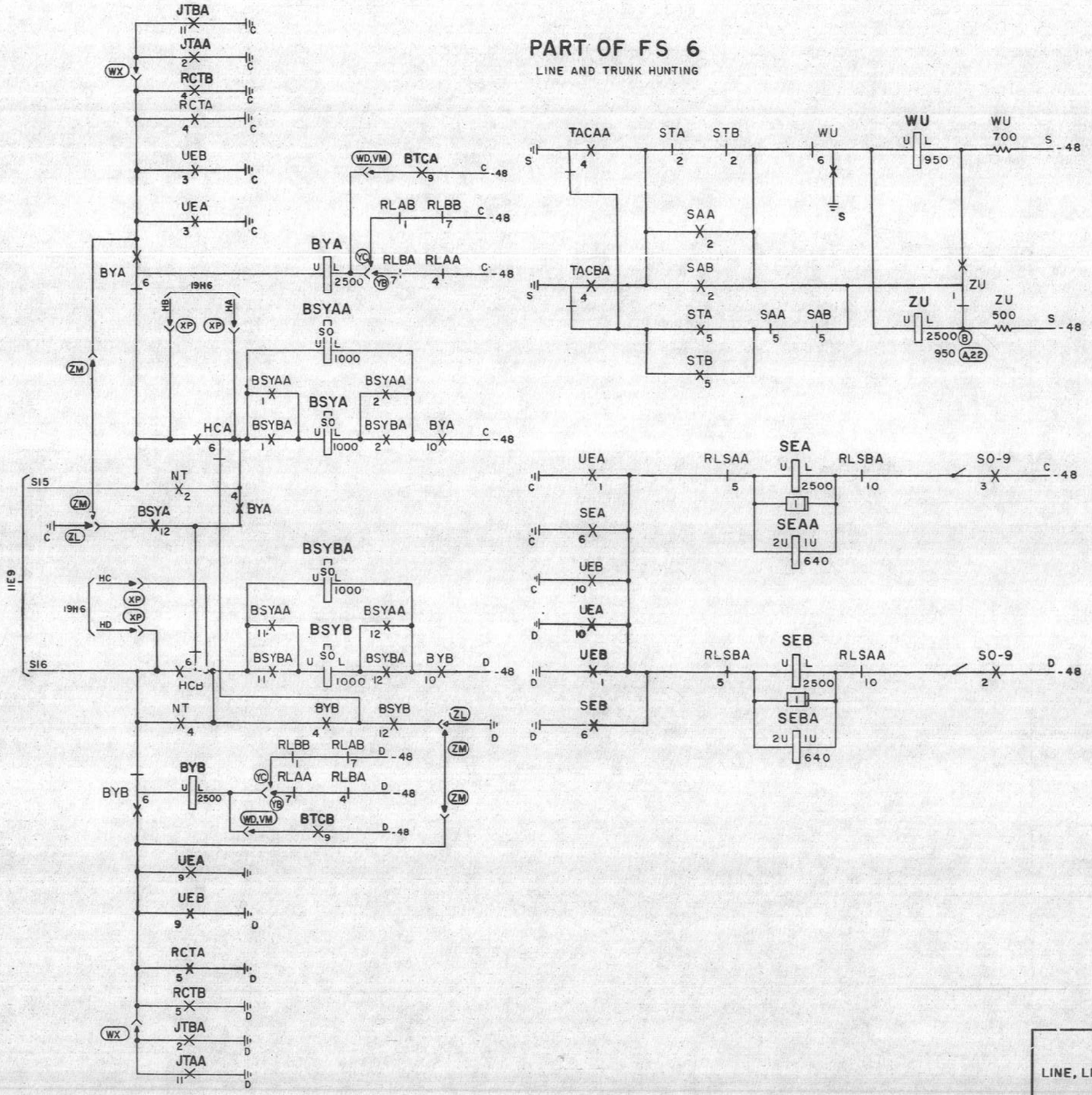

REL DESIG	EQUIP LOC
BSYA	6V
BSYAA	6V
BSYB	6U
BSYBA	6U
BTCA,B	6T,S
BYA	6V
BYB	6U
HCA	6Y
HCB	6Y
JTAA	6Y
JTBA	6X
NT	6L,M
RCTA	6Y
RCTB	6X
RLAA	6T
RLBA	6S
RLSAA	6K
RLSBA	6J
SAA	6K
SAB	6J
SEA	6V
SEAA	6V
SEB	6U
SEBA	6U
STA	6K
STB	6J
SO-9	6W
TEA1	6AB
TEB1	6AA
UEA	6V
UEB	6U
WU	6L,M
ZU	6L,M

DRAWING ISSUE	
1	
2B	
4A	
8B	
12B	
16B	
25D	
WORN DRAWING REPRODUCED WITHOUT CHANGE 1-16-66	
29B	
33D	
36B	
39B	
41B	

LINE, LINK, AND MARKER CIRCUIT

BELL TELEPHONE LABORATORIES INCORPORATED

6S

41

SD-65741-01-B12

SD-65741-01-B12

FS 7

JUNCTOR REGISTER RELAYS

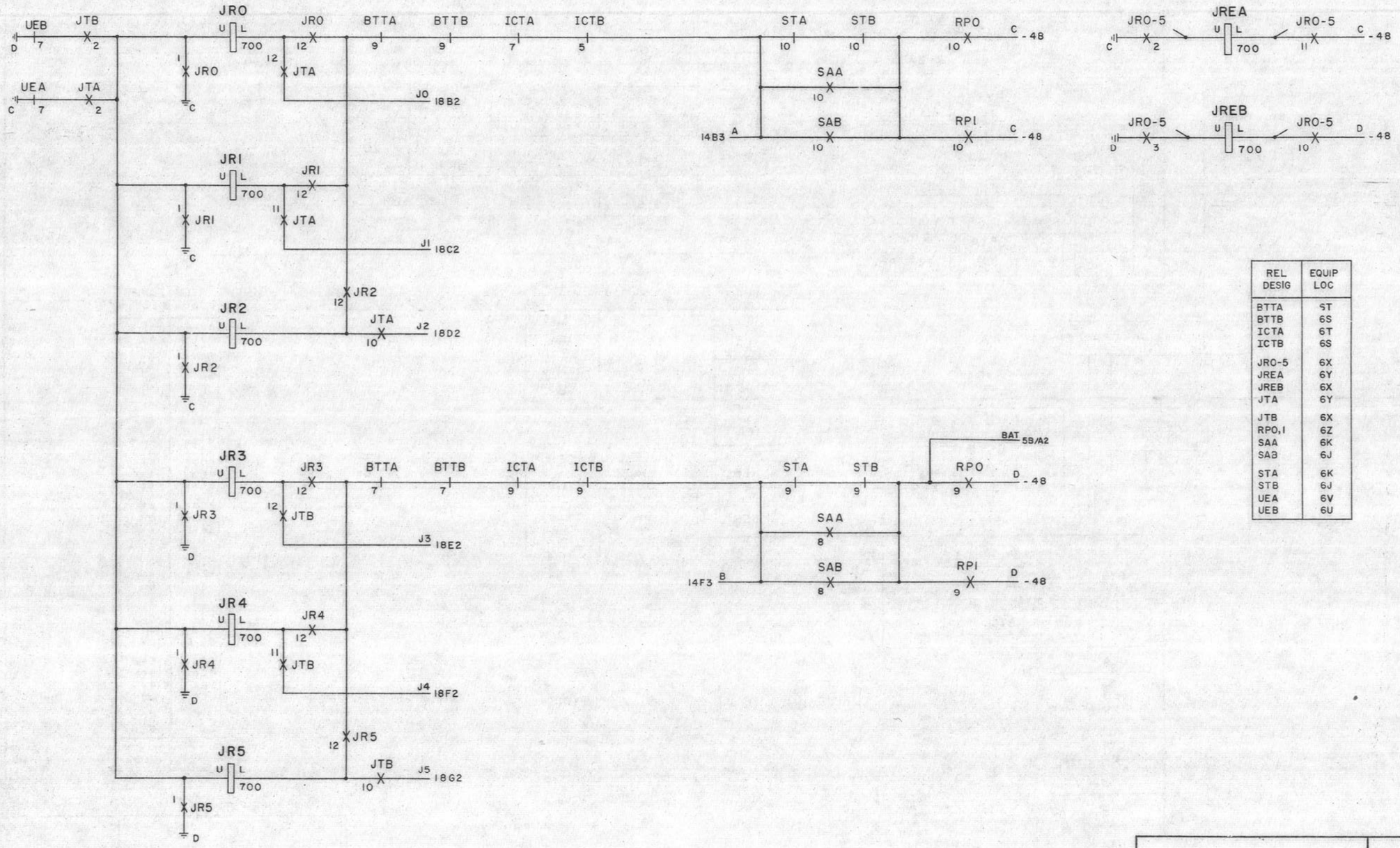

REL DESIG	EQUIP LOC
BTTA	6T
BTTB	6S
ICTA	6T
ICTB	6S
JRO-5	6X
JREA	6Y
JREB	6X
JTA	6Y
JTB	6X
RPO,I	6Z
SAA	6K
SAB	6J
STA	6K
STB	6J
UEA	6V
UEB	6U

DRAWING ISSUE	
1	
2B	
3B	

LINE, LINK, AND MARKER CIRCUIT

BELL TELEPHONE LABORATORIES INCORPORATED

DWG SIZE 6S

ISSUE 46D

SD-65741-01-B13

SD-65741-01-B13

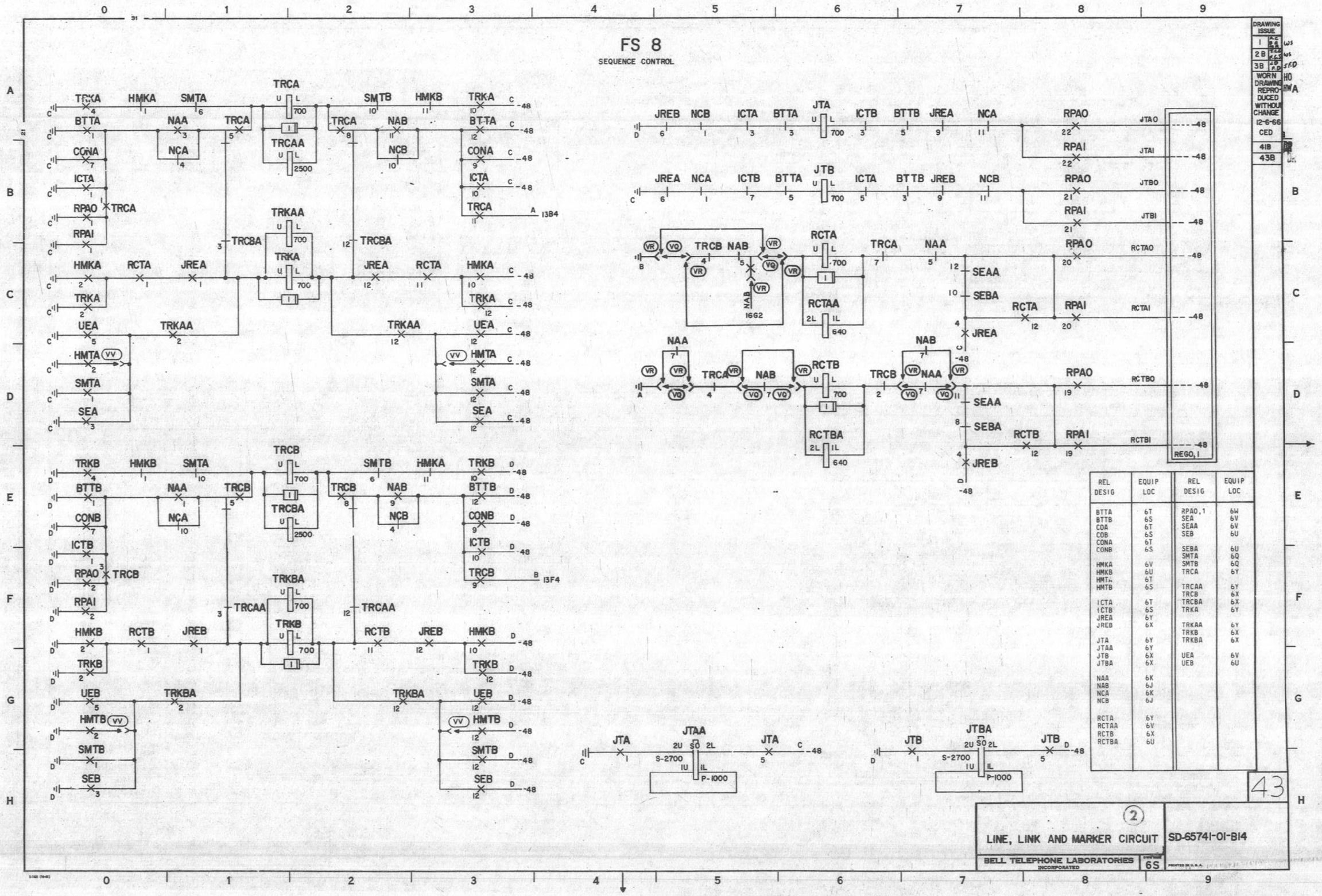

REL DESIG	EQUIP LOC	REL DESIG	EQUIP LOC
BTTA	6T	RPAO, 1	6W
BTTB	6S	SEA	6V
COA	6T	SEAA	6V
COB	6S	SEB	6U
CONA	6T		
CONB	6S	SEBA	6U
		SMTA	6Q
HMKA	6V	SMTB	6Q
HMKB	6U	TRCA	6Y
HMTA	6T		
HMTB	6S	TRCAA	6Y
		TRCB	6X
ICTA	6T	TRCBA	6X
ICTB	6S	TRKA	6Y
JREA	6Y		
JREB	6X	TRKAA	6Y
		TRKB	6X
JTA	6Y	TRKBA	6X
JTAA	6Y		
JTB	6X	UEA	6V
JTBA	6X	UEB	6U
NAA	6K		
NAB	6J		
NCA	6K		
NCB	6J		
RCTA	6Y		
RCTAA	6V		
RCTB	6X		
RCTBA	6U		

PART OF FS 9

ROUTE CONTROL

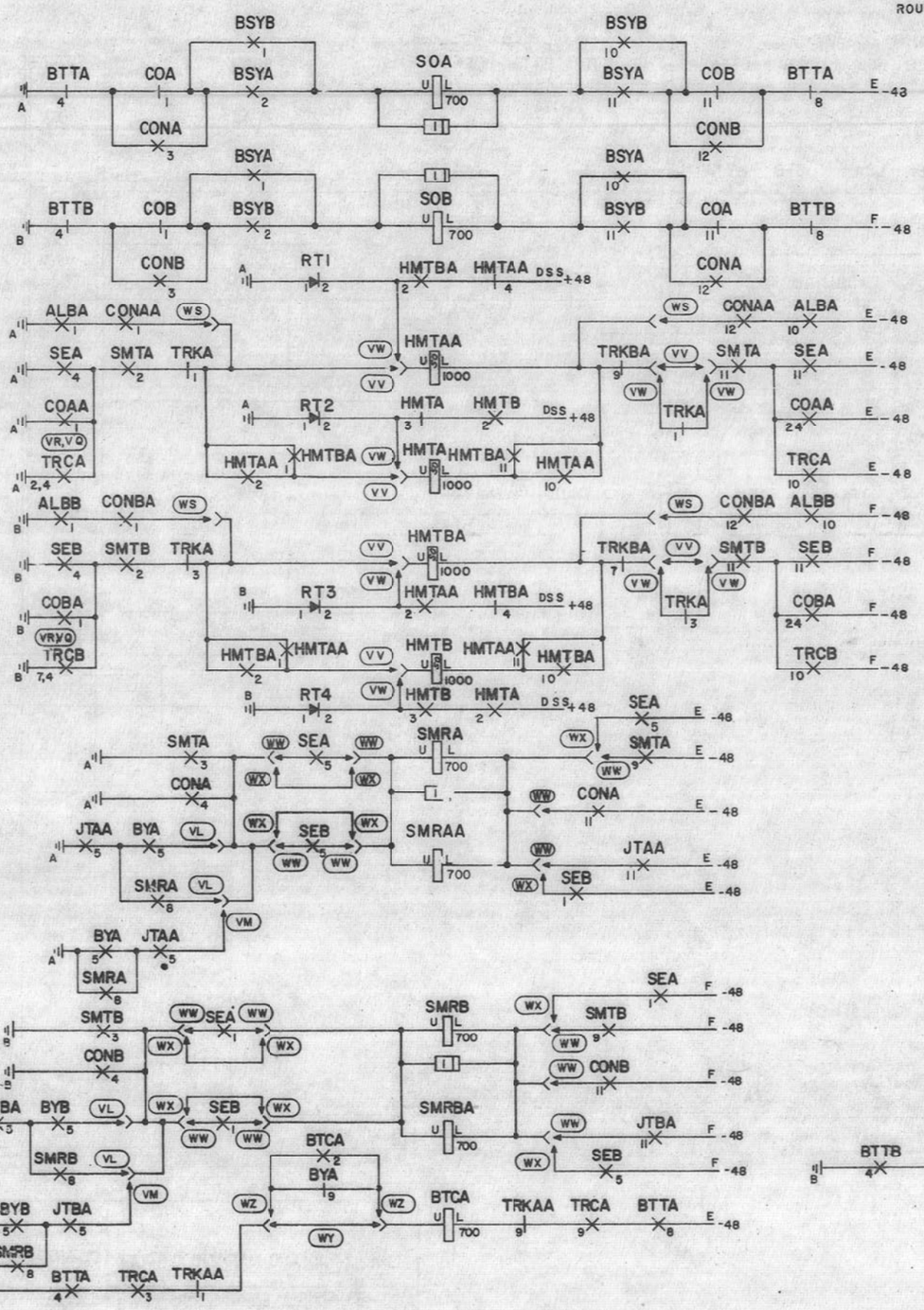

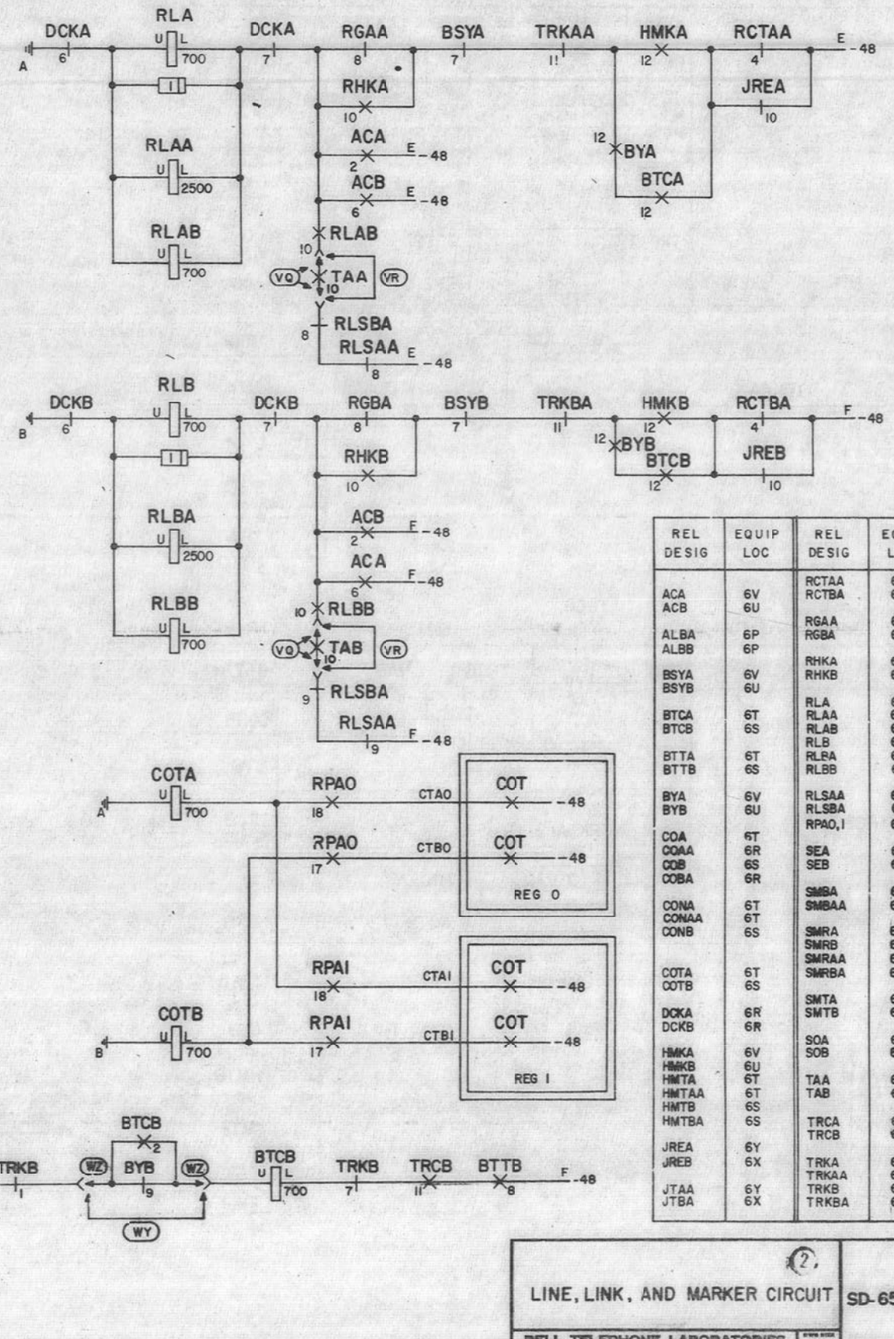

REL DESIG	EQUIP LOC	REL DESIG	EQUIP LOC
ACA	6V	RCTAA	6V
ACB	6U	RCTBA	6U
ALBA	6P	RGAA	6G
ALBB	6P	RGBA	6G
BSYA	6V	RHKA	6G
BSYB	6U	RHKB	6G
BTCA	6T	RLA	6T
BTCB	6S	RLAA	6T
BTTA	6T	RLAB	6T
BTTB	6S	RLB	6S
BYA	6V	RLBA	6S
BYB	6U	RLBB	6S
COA	6T	RLSAA	6K
COAA	6R	RLSBA	6J
COB	6S	RPAO, I	6W
COBA	6R	SEA	6V
CONA	6T	SEB	6U
CONAA	6T	SMBA	6T
CONB	6S	SMBAA	6T
COTA	6T	SMRA	6T
COTB	6S	SMRB	6S
DCKA	6R	SMRAA	6T
DCKB	6R	SMRBA	6S
HMKA	6V	SMTA	6Q
HMKB	6U	SMTB	6Q
HMTA	6T	SOA	6R
HMTAA	6T	SOB	6R
HMTB	6S	TAA	6K
HMTBA	6S	TAB	6J
JREA	6Y	TRCA	6Y
JREB	6X	TRCB	6X
JTAA	6Y	TRKA	6Y
JTBA	6X	TRKAA	6Y
		TRKB	6X
		TRKBA	6X

DRAWING ISSUE		
1	PC MR	WS
2B	CC GS	WS
3B	JD PD	JFD
4A	AD EHO	RAC
6A	KJS BAT	TEB

WORN DRAWING REPRODUCED WITHOUT CHANGE 1-13-67 JJR

33D	FED FJS RHP	
36B	ROZ FJS LDJ	
39B	ROZ FJS LDJ	
41B		
43B		

43

(2) LINE, LINK, AND MARKER CIRCUIT — SD-65741-01-B15

BELL TELEPHONE LABORATORIES INCORPORATED — SIZE 6S

SD-65741-01-B15

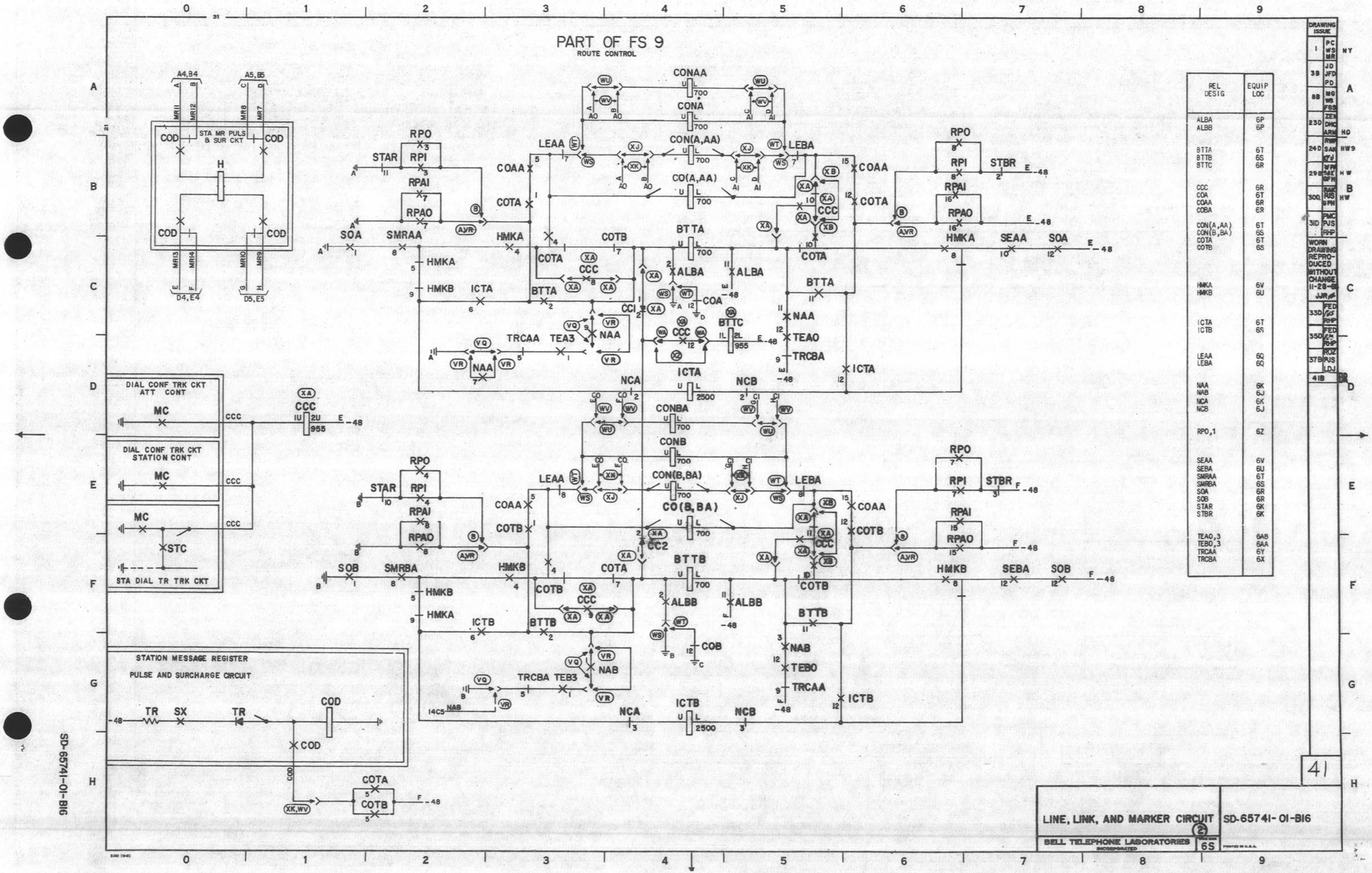

REL DESIG	EQUIP LOC
ALBA	6P
ALBB	6P
BTTA	6T
BTTB	6S
BTTC	6R
CCC	6R
COA	6T
COAA	6R
COBA	6R
CON(A,AA)	6T
CON(B,BA)	6S
COTA	6T
COTB	6S
HMKA	6V
HMKB	6U
ICTA	6T
ICTB	6S
LEAA	6Q
LEBA	6Q
NAA	6K
NAB	6J
NCA	6K
NCB	6J
RPO,1	6Z
SEAA	6V
SEBA	6U
SMRAA	6T
SMRBA	6S
SOA	6R
SOB	6R
STAR	6K
STBR	6K
TEAO,3	6AB
TEBO,3	6AA
TRCAA	6Y
TRCBA	6X

DRAWING ISSUE		
1	PC WS MR	NY
3B	JD JFD PD	
8B	MG WS FGS	
23D	ZEN DHC ARM	HO
24D	RWP SAN KFJ	HW9
29B	WPH SAK GFH	HW
30D	RAK PJS GPH	HW
31D	PMC PJS RHP	
WORN DRAWING REPRODUCED WITHOUT CHANGE 11-28-66 JJR		
33D	FED PJS RHP	
35D	FED PJS RHP	
37B	ROZ PJS LDJ	
41B		

LINE, LINK, AND MARKER CIRCUIT (2) SD-65741-01-B16

BELL TELEPHONE LABORATORIES INCORPORATED 6S PRINTED IN U.S.A.

SD-65741-01-B16

REL DESIG	EQUIP LOC
ACA	6V
ACB	6U
BTCA	6T
BTCB	6S
BYA	6V
BYB	6U
COA	6T
COB	6S
HMTA	6T
HMTAA	6T
HMTB	6S
HMTBA	6S
JREA	6Y
JREB	6X
RAOA	6G
RAOB	6G
RAIA	6G
RAIB	6G
RCAO	6H
RCAI	6H
RCTA	6Y
RCTB	6X
RGA	6G
RGAA	6G
RGBA	6G
RHKA	6G
RHKB	6G
RLSAA	6K
RLSBA	6J
RPAO	6W
RPAI	6W
RPO	6Z
RPI	6Z
SMTA	6Q
SMTB	6Q
TACAA	6Y
TACBA	6Y
TP2-7	6Z
TRCAA	6Y
TRCBA	6X

FS 10

REGISTER CONTROL

DRAWING ISSUE	
1	
2B	
3B	
6A	
16B	
24D	
31D	
35D	
39B	
41B	
43B	

LINE, LINK, AND MARKER CIRCUIT (2)

BELL TELEPHONE LABORATORIES INCORPORATED 65

SD-65741-01-B17

43

SD-65741-01-B17

PART OF FS II

CLASS OF SERVICE

SEE NOTE 3H & SD-65746-01-G60, CAD35 & G62, CAD16 FOR CROSS CONNECTION INFORMATION

CS -48 Y -48 X

SEB SEA SEB SEA

ZU ZU

SO SO SI SI S2 S2 S3 S3 S4 S4 S5 S5 S6 S6 S7 S7 S8 S8 S9 S9

CS0 CS1 CS2 CS3 CS4 CS5 CS6 CS7 CS8 CS9

J0 13B1 J1 13C1 J2 13D2 J3 13F1 J4 13G1 J5 13H2

TCS2-5, ⓥTCS6,7 CS20-70 / CS21-71 / CS22-72 / CS23-73 / CS24-74 / CS25-75 / CS26-76 / CS27-77 / CS28-78 / CS29-79

TRCO TRCI

COT

TT P-300 S-300

TTLA TTLD TLA TLD COT RTT KPC TO TEAI TEBI

RGA RGB RAOA RAOB RAIA RAIB

TLAO TLAI TLDO TLDI COTO COTI RTTO RTTI KPCO KPCI

TO REG 0 TO REG 1

TSDA TSDB

TRTI RCO RCI

STA DIAL TR CONT CKT

CENT. OFF. TRK OR RING-DOWN TIE TRK CKTS

MC ACA RT

CORDLESS POSITION CKT

DIAL BACK NL KEY

BUSY VERIFICATION AUX TRK CKT

ATT TRK CKTS

TN

WJ (SEE NOTE B)

REL DESIG	EQUIP LOC
NT	6L,M
RAOA	6G
RAOB	6G
RAIA	6G
RAIB	6G
RGA	6G
RGB	6G
SO-9	6W
SEA	6V
SEB	6U
TCS2,3	2M
TCS 4,5	3M
TEAI	6AB
TEBI	6AA
TRCO	4Z
TRCI	4Z
TSDA	6R
TSDB	6R
TT	6R
ZU	6L,M

SHEET NOTES

A. LEAD DESIGNATIONS INDICATED BY ARROWS APPLY TO LEADS BETWEEN MARKER UNITS

B. WHEN OPTION WJ IS REQUIRED THE INSTALLER SHALL ADD A STRAP BETWEEN 6 BREAK OF RELAY NT AND 4 MAKE OF RELAY COAA (OPTION 22 PROVIDED) OR 2M OF RELAY COS (OPTION 9 PROVIDED).

DRAWING ISSUE

WORN DRAWING REPRODUCED WITHOUT CHANGES 10-11-66 FED

SD-65741-01-B18

38

LINE, LINK, AND MARKER CIRCUIT (2) SD-65741-01-B18

BELL TELEPHONE LABORATORIES INCORPORATED 6S

PART OF FS II

CLASS OF SERVICE

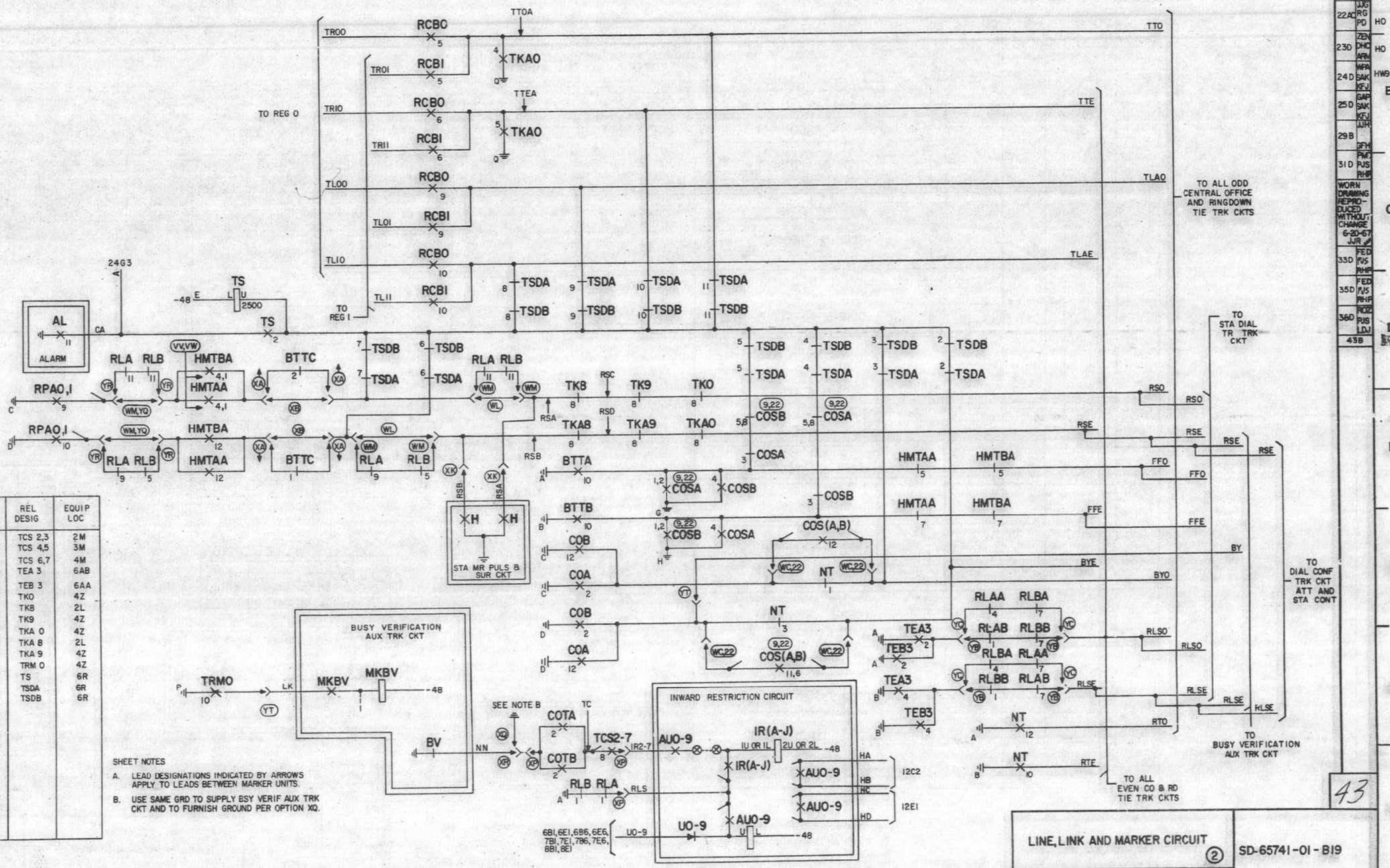

REL DESIG	EQUIP LOC	REL DESIG	EQUIP LOC
BTTA	6T	TCS 2,3	2M
BTTB	6S	TCS 4,5	3M
BTTC	6R	TCS 6,7	4M
COA	6T	TEA 3	6AB
COB	6S	TEB 3	6AA
COSA	6P	TKO	4Z
COSB	6P	TK8	2L
COTA	6T	TK9	4Z
COTB	6S	TKA 0	4Z
		TKA 8	2L
H	EXT	TKA 9	4Z
HMTAA	6T	TRM 0	4Z
HMTBA	6S	TS	6R
		TSDA	6R
NT	6L,M	TSDB	6R
RCBO	6H		
RCBI	6H		
RLA	6T		
RLAA	6T		
RLAB	6T		
RLB	6S		
RLBA	6S		
RLBB	6S		
RPAO, I	6W		

SHEET NOTES

A. LEAD DESIGNATIONS INDICATED BY ARROWS APPLY TO LEADS BETWEEN MARKER UNITS.

B. USE SAME GRD TO SUPPLY BSY VERIF AUX TRK CKT AND TO FURNISH GROUND PER OPTION XQ.

DRAWING ISSUE		
1	PC	WS
2B	TLL FGS	WS NY
3B	JD PD	JFD
11B	D.L LHB	PO.B
16B	JOS HP POB	HO
22AC	JJG RG PD	HO
23D	ZEN DHC ARM	HO
24D	WPA SAK KFJ	HW9
25D	GAP SAK KFJ	
29B	JJH GFH	
31D	PMO PJS RHP	
WORN DRAWING REPRODUCED WITHOUT CHANGE 6-20-67 JJR		
33D	FED PJS RHP	
35D	FED PJS RHP	
36D	ROZ PJS LDJ	
43B		

43

LINE, LINK AND MARKER CIRCUIT ②

SD-65741-01-B19

BELL TELEPHONE LABORATORIES INCORPORATED

6S

PRINTED IN U.S.A.

SD-65741-01-B19

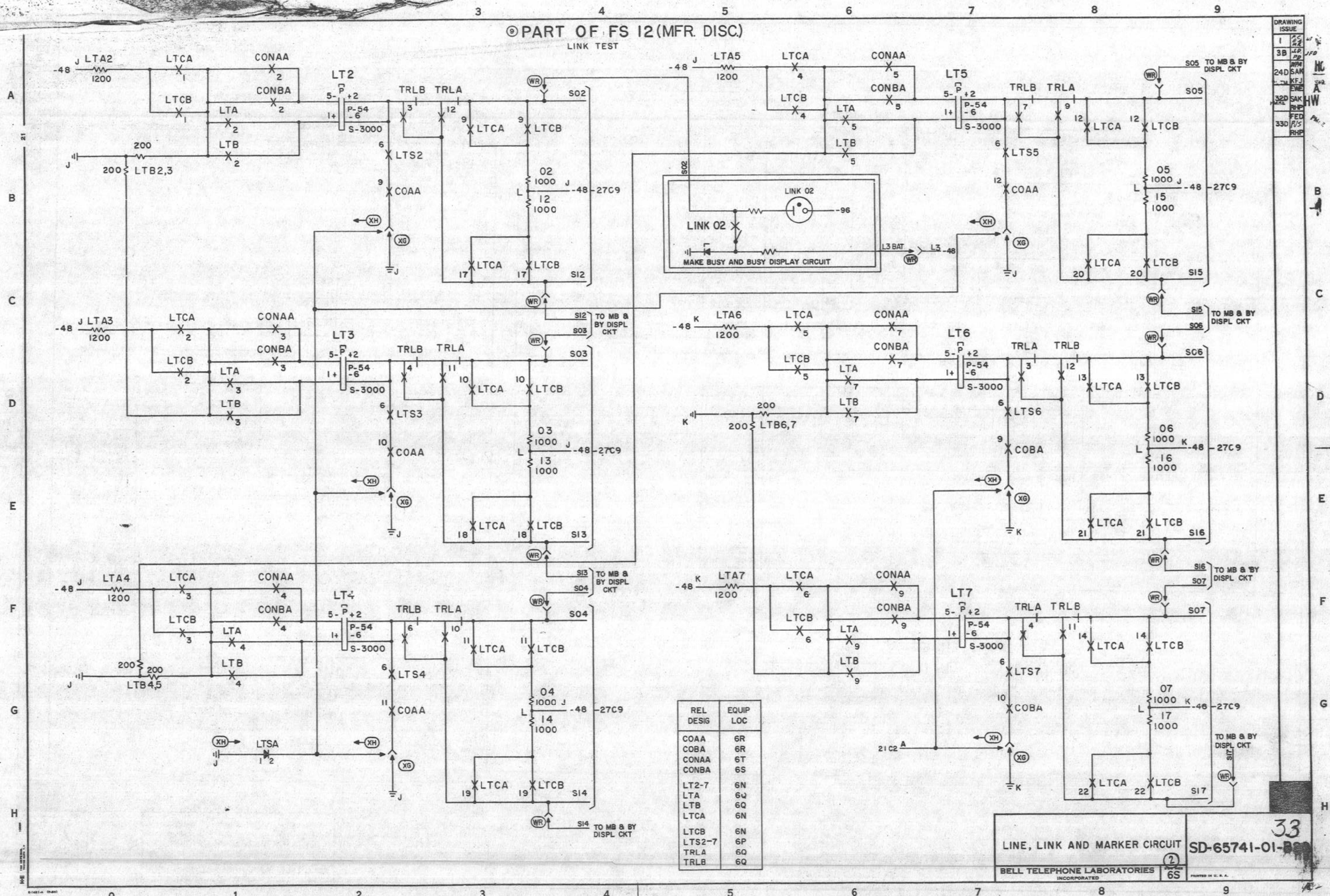

REL DESIG	EQUIP LOC
COAA	6R
COBA	6R
CONAA	6T
CONBA	6S
LT2-7	6N
LTA	6Q
LTB	6Q
LTCA	6N
LTCB	6N
LTS2-7	6P
TRLA	6Q
TRLB	6Q

LINE, LINK AND MARKER CIRCUIT

BELL TELEPHONE LABORATORIES INCORPORATED

SD-65741-01-B20

33

SD-65741-01-B20

⑨PART OF FS 12 (MFR DISC.)

LINK TEST

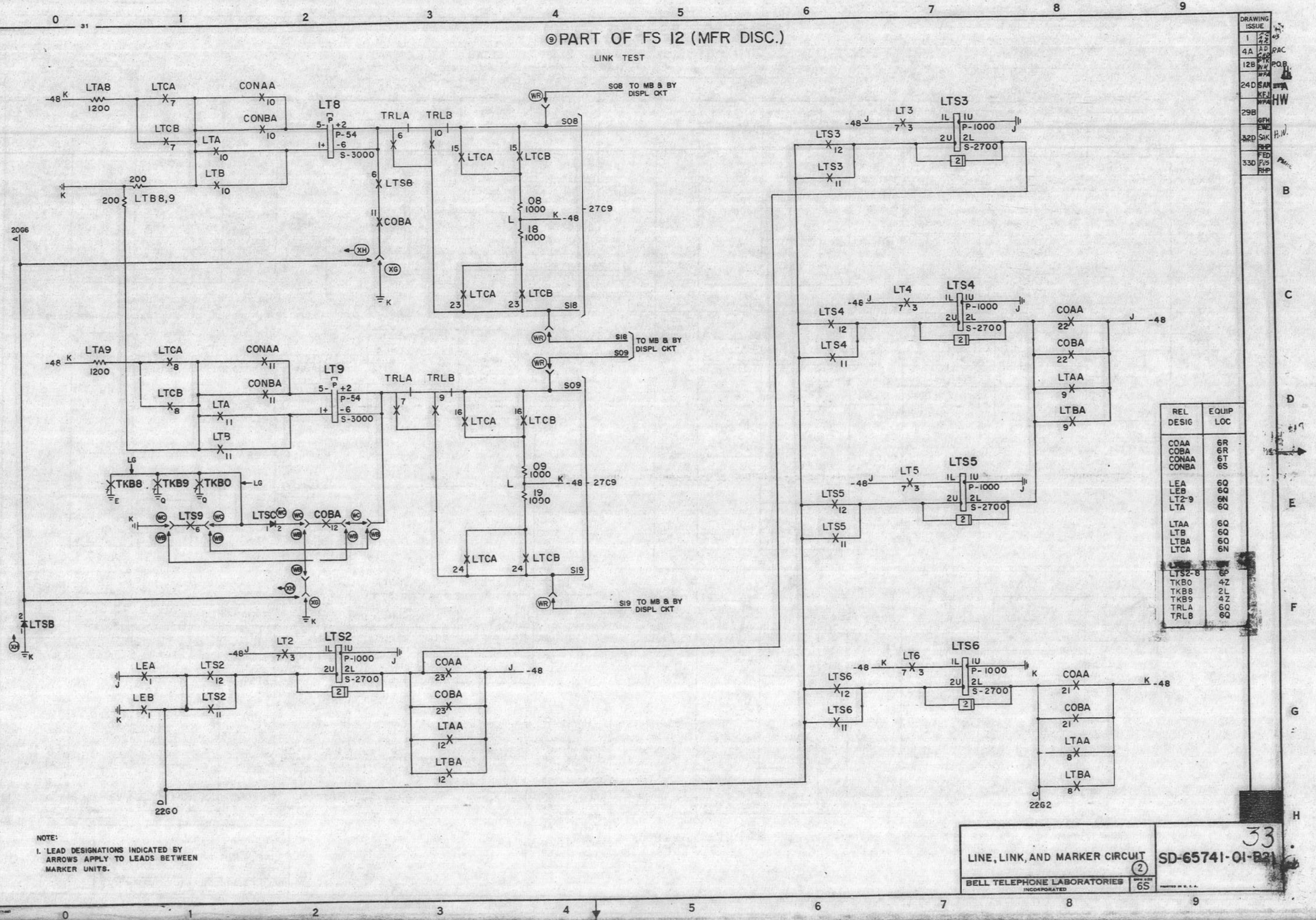

REL DESIG	EQUIP LOC
COAA	6R
COBA	6R
CONAA	6T
CONBA	6S
LEA	6Q
LEB	6Q
LT2-9	6N
LTA	6Q
LTAA	6Q
LTB	6Q
LTBA	6Q
LTCA	6N
LTS2-8	6P
TKB0	4Z
TKB8	2L
TKB9	4Z
TRLA	6Q
TRLB	6Q

NOTE:
1. LEAD DESIGNATIONS INDICATED BY ARROWS APPLY TO LEADS BETWEEN MARKER UNITS.

LINE, LINK, AND MARKER CIRCUIT (2)

BELL TELEPHONE LABORATORIES INCORPORATED

SD-65741-01-B21

33

SD-65741-01-B21

⑨ PART OF FS 12 (MFR DISC.)

LINK TEST

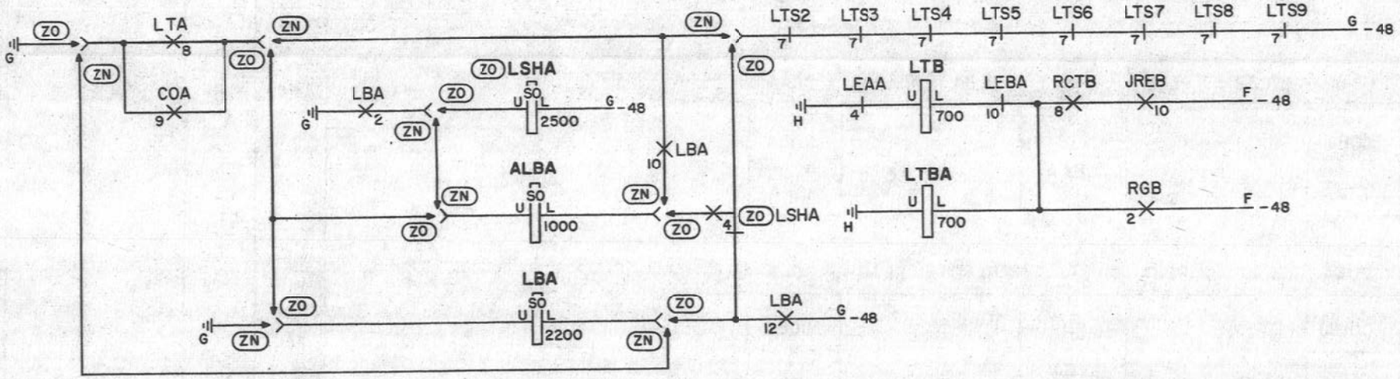

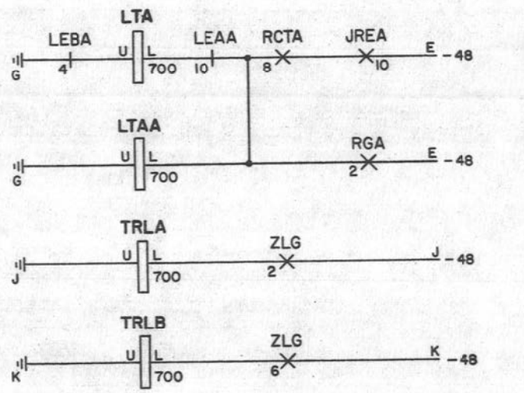

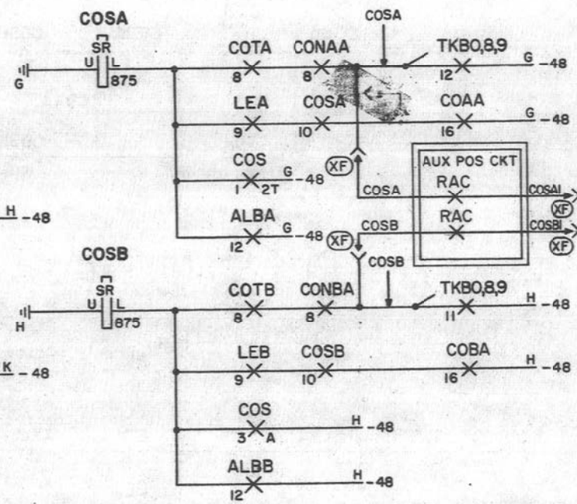

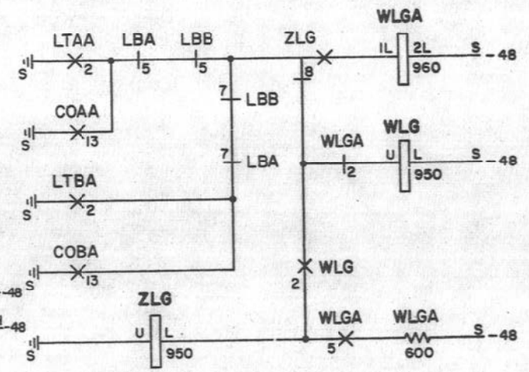

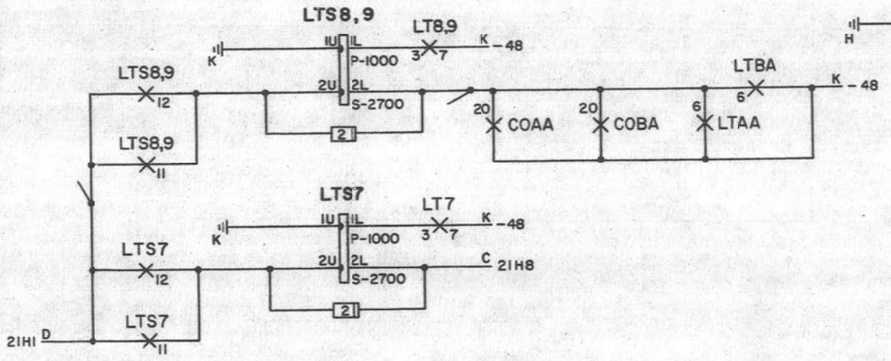

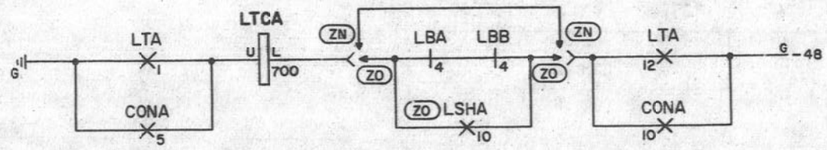

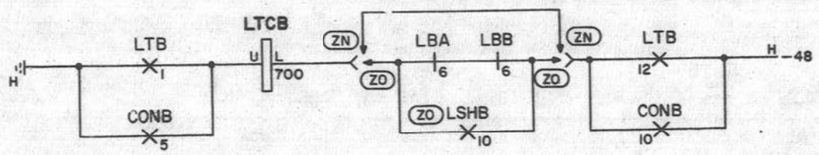

SHEET NOTES:
A. LEAD DESIGNATIONS INDICATED BY ARROWS APPLY TO LEADS BETWEEN MARKER UNITS.

REL DESIG	EQUIP LOC
ALBA	6P
ALBB	6P
COA	6T
COAA	6R
COB	6S
COBA	6R
CONA	6T
CONAA	6T
CONB	6S
CONBA	6S
COS	6P
COSA	6P
COSB	6P
COTA	6T
COTB	6S
JREA	6Y
JREB	6X
LBA	6Q
LBB	6Q
LEA	6Q
LEAA	6Q
LEB	6Q
LEBA	6Q
LSHA	6N
LSHB	6N
LT7-9	6N
LTA	6Q
LTAA	6Q
LTB	6Q
LTBA	6Q
LTCA	6N
LTCB	6N
LTS2-9	6P
RCTA	6Y
RCTB	6X
RGA	6G
RGB	6G
TKBO	4Z
TKB8	2L
TKB9	4Z
TRLA	6Q
TRLB	6Q
WLG	6L
WLGA	6L
ZLG	6L

DRAWING ISSUE: 12B, 23D, 30D, 33D

⑨ PART OF FS 12 (MFR DISC.)

LINK TEST

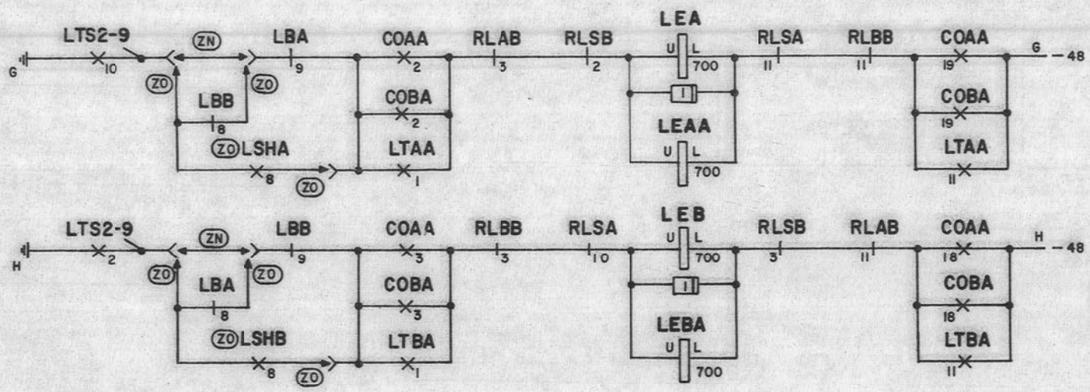

REL DESIG	EQUIP LOC
COA	6T
COAA	6R
COB	6S
COBA	6R
COS	6P
JREA	6Y
JREB	6X
LBA	6Q
LBB	6Q
LEA	6Q
LEAA	6Q
LEB	6Q
LEBA	6Q
LSHA	6N
LSHB	6N
LTAA	6Q
LTBA	6Q
LTS2-9	6P
RCTAA	6V
RCTBA	6U
RLAB	6T
RLBB	6S
RLSA	6K
RLSB	6J
SMCO	4AA
SMC1	3V
SMC2	2L
SMC3	2L
SMC4,5	3V
SMC6-8	4AA
SMTA	6Q
SMTB	6Q
STAR	6K
STBR	6K
TRCAA	6Y
TRCBA	6X
TRKAA	6Y
TRKBA	6X

PART OF FS 13

SELECT MAGNET CONTROL

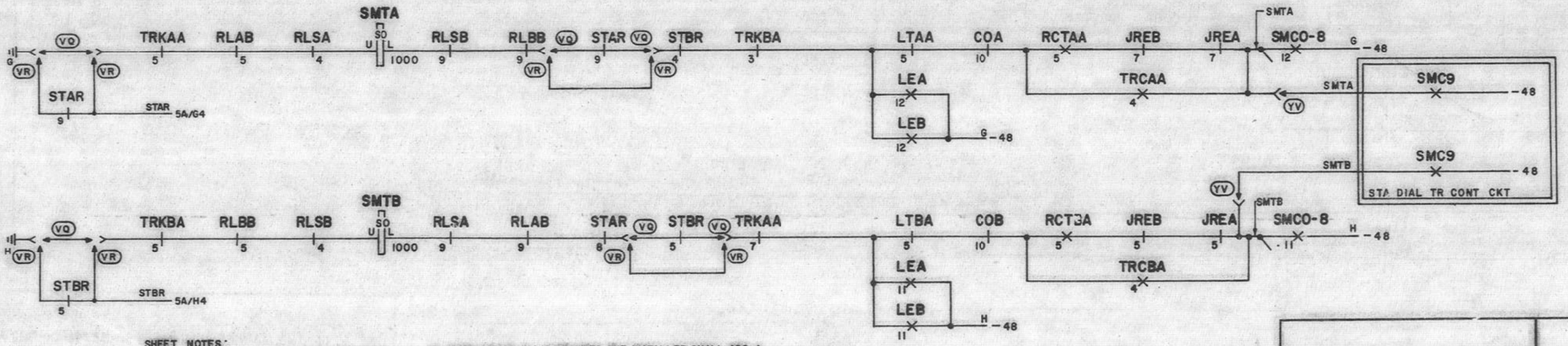

SHEET NOTES:

A. LEAD DESIGNATIONS INDICATED BY ARROWS APPLY TO LEADS BETWEEN MARKER UNITS

B. WHEN OPTION WJ IS REQUIRED THE INSTALLER SHALL ADD A STRAP BETWEEN 2M OF RELAY COS AND 6 BREAK OF RELAY NT.

ISSUE 46D

LINE, LINK, AND MARKER CIRCUIT (2) SD-65741-01-B23

BELL TELEPHONE LABORATORIES INCORPORATED 6S

SD-65741-01-B23

PART OF FS 13

SELECT MAGNET CONTROL

SMCO
SMCO
-48 TO L U 700
TKB8
TKBO,9
RGAA,BA
TRCO,I
BTCA
COAA
BTCB
COBA

SMCI
SMCI
-48 S L U 700
JRO,I,2,5
RGAA,BA

SMC2
-48 L2 L U 700
THC2
TKB8

SMC3
-48 L3 L U 700
THC3

SMC4
-48 L4 L U 700
THC4

SMC5
-48 L5 L U 700
THC5

Ⓥ SMC6
-48 L6 L U 700
THC6

Ⓥ SMC7
-48 L7 L U 700
THC7

SMC8
SMC8
-48 TI L U 700
JR3,4
TRUO,I
TKBO,9
COAA
COBA

TO STA DIAL TR CONT CKT

SM2 SM3 SM4 SM5 SM6 SM7 SM8 SM9

(ZZ,YA) SM(0,I,8)2
(ZV,ZX) SM(2-5)2
(ZW,ZY) SM(6,7)2
-48 S23 LB LT 600
SMCO-8 2
WG SM2 33K I WG SM2
LT2 8 22 9 LTS2 4 9 22
WIL 1 2 ZL
LEBA J LEAA J

(ZZ,YA) SM(0,I,8)3
(ZV,ZX) SM(2-5)3
(ZW,ZY) SM(6,7)3
-48 S23 LB LT 600
SMCO-8 3
WG SM3 33K I WG SM3
LT3 8 22 9 LTS3 4 9 22
ZIL 1 2 ZL
LEBA J LEAA J

(ZZ,YA) SM(0,I,8)4
(ZV,ZX) SM(2-5)4
(ZW,ZY) SM(6,7)4
-48 S45 RT RB 600
SMCO-8 4
WG SM4 33K I WG SM4
LT4 8 22 9 LTS4 4 9 22
ZIL 6 5 ZL
LEBA K LEAA K

(ZZ,YA) SM(0,I,8)5
(ZV,ZX) SM(2-5)5
(ZW,ZY) SM(6,7)5
-48 S45 RT RB 600
SMCO-8 5
WG SM5 33K I WG SM5
LT5 8 22 9 LTS5 4 9 22
ZIL 2 3 ZL
LEBA J LEAA J

(ZZ,YA) SM(0,I,8)6
(ZV,ZX) SM(2-5)6
(ZW,ZY) SM(6,7)6
-48 S67 LB LT 600
SMCO-8 6
WG SM6 33K I WG SM6
LT6 8 22 9 LTS6 4 9 22
WIL 2 6 ZL
LEBA J LEAA J

(ZZ,YA) SM(0,I,8)7
(ZV,ZX) SM(2-5)7
(ZW,ZY) SM(6,7)7
-48 S67 LB LT 600
SMCO-8 7
WG SM7 33K I WG SM7
LT7 8 22 9 LTS7 4 9 22
ZIL 3 4 ZL
LEBA J LEAA J

(ZZ,YA) SM(0,I,8)8
(ZV,ZX) SM(2-5)8
(ZW,ZY) SM(6,7)8
-48 S89 RT RB 600
SMCO-8 8
WG SM8 33K I WG SM8
LT8 8 22 9 LTS8 4 9 22
ZIL 12 7 ZL
LEBA K LEAA K

(ZZ,YA) SM(0,I,8)9
(ZV,ZX) SM(2-5)9
(ZW,ZY) SM(6,7)9
-48 S89 RT RB 600
SMCO-8 9
WG SM9 33K I WG SM9
LT9 8 22 9 LTS9 4 9 22
28C2

LCKI
-48 S LEB 8 IU 2U 2450 LEA 8
LCKI 9
LCKI 8
-48

LCK2
-48 S IL 2L 2450 5
LCK2
TRLB 1

TRLB 2
19CI A
TRLA 2
LT2-9 I S
LTS2-9 I S 9 22
TRLB 1

TRLA LEA 5 SMCO-8 1 RB RT 600 SI -48 SMI
LEB 5 SMI
WG SMI 33K I WG SMI
LEA 3 SMCO-8 10 RB RT 600 SO -48 SMO
LEB 3 SMO
WG SMO 33K I WG SMO J
28D2

(ZZ,YA) SM(0,I,8)I
(ZV,ZX) SM(2-5)I
(ZW,ZY) SM(6,7)I
(ZZ,YA) SM(0,I,8)0
(ZV,ZX) SM(2-5)0
(ZW,ZY) SM(6,7)0

TO STA DIAL TR CONT CKT

-48 S WL L U 700 WL 950 WL 6 S STB 3 STA 3 LTAA 4 S
SAA 4
SAB 4 LTBA 4 S
ZL 4
ZL L U 950

-48 S WIL L U 700 WIL 950 WIL 6 S WL 1 S
ZIL 4
ZIL L U 950

NOTES:

A. LEAD DESIGNATIONS INDICATED BY ARROWS APPLY TO LEADS BETWEEN MARKER UNITS

B. NUMBERS IN PARENTHESES IN A SELECT MAGNET DESIGNATION REFERS TO THE SWITCH NO. IN WHICH IT IS LOCATED.

REL DESIG	EQUIP LOC
BTCA	6T
BTCB	6S
COAA	6R
COBA	6R
JRO-5	6X
LCK1,2	6P
LEA	6Q
LEAA	6Q
LEB	6Q
LEBA	6Q
LTAA	6Q
LTBA	6Q
LT2-9	6P
LTS2-9	6P
RGAA,BA	6G
SAA	6K
SAB	6J
SMCO	4AA
SMCI	3V
SMC2,3	2L
SMC4,5	3V
SMC6-8	4AA
STA	6K
STB	6J
THC2,3	2M
THC4,5	3M
THC6,7	4M
TKBO,9	4Z
TKB8	2L
TRCO,1	4Z
TRLA	6Q
TRLB	6Q
TRUO,1	4Z
WIL	6L,M
WL	6L,M
ZIL	6L,M
ZL	6L,M

DRAWING ISSUE		
I	PC BAA MR	WS
38	JED JFD PD	
12B	PTK POE WM	A
16B	JOS HP	
	POE	HO
22AC	LWG RG PD	HO
23D	ZEN DHC ARM	
30D	EW PJS SFH	B HW
WORN DRAWING REPRODUCED WITHOUT CHANGE 11-30-66 J.J.R.		
33D	FED PJS RHP	

33

LINE, LINK, AND MARKER CIRCUIT (2)

SD-65741-01-B24

BELL TELEPHONE LABORATORIES INCORPORATED 6S

SD-65741-01-B24

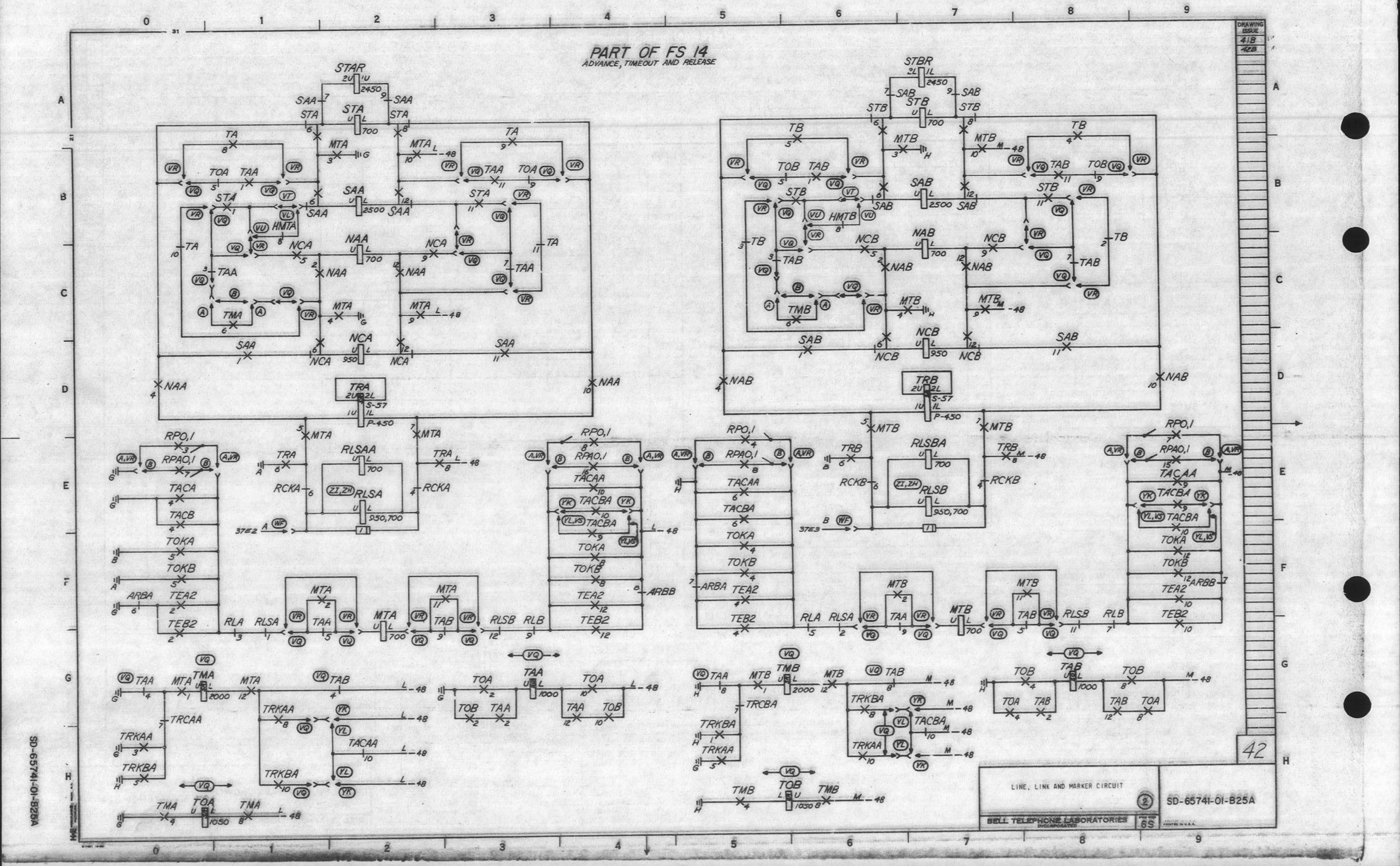
PART OF FS 14
ADVANCE, TIMEOUT AND RELEASE
DRAWING ISSUE
41B
42B
42
LINE, LINK AND MARKER CIRCUIT
BELL TELEPHONE LABORATORIES INCORPORATED
6S
SD-65741-01-B25A
SD-65741-01-B25A

PART OF FS 14

ADVANCE, TIMEOUT AND RELEASE

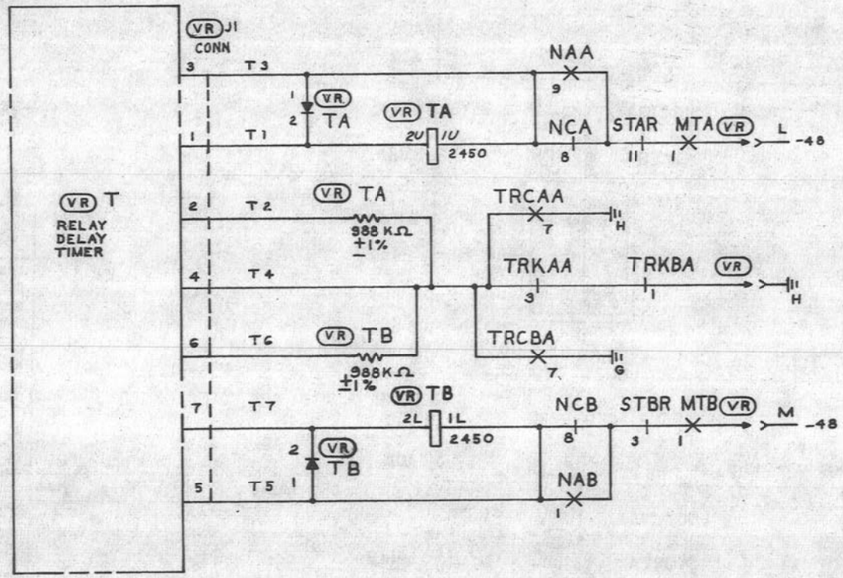

DRAWING ISSUE 4I8

41

LINE, LINK AND MARKER CIRCUIT (2)

SD-65741-01-B258

BELL TELEPHONE LABORATORIES INCORPORATED

6S

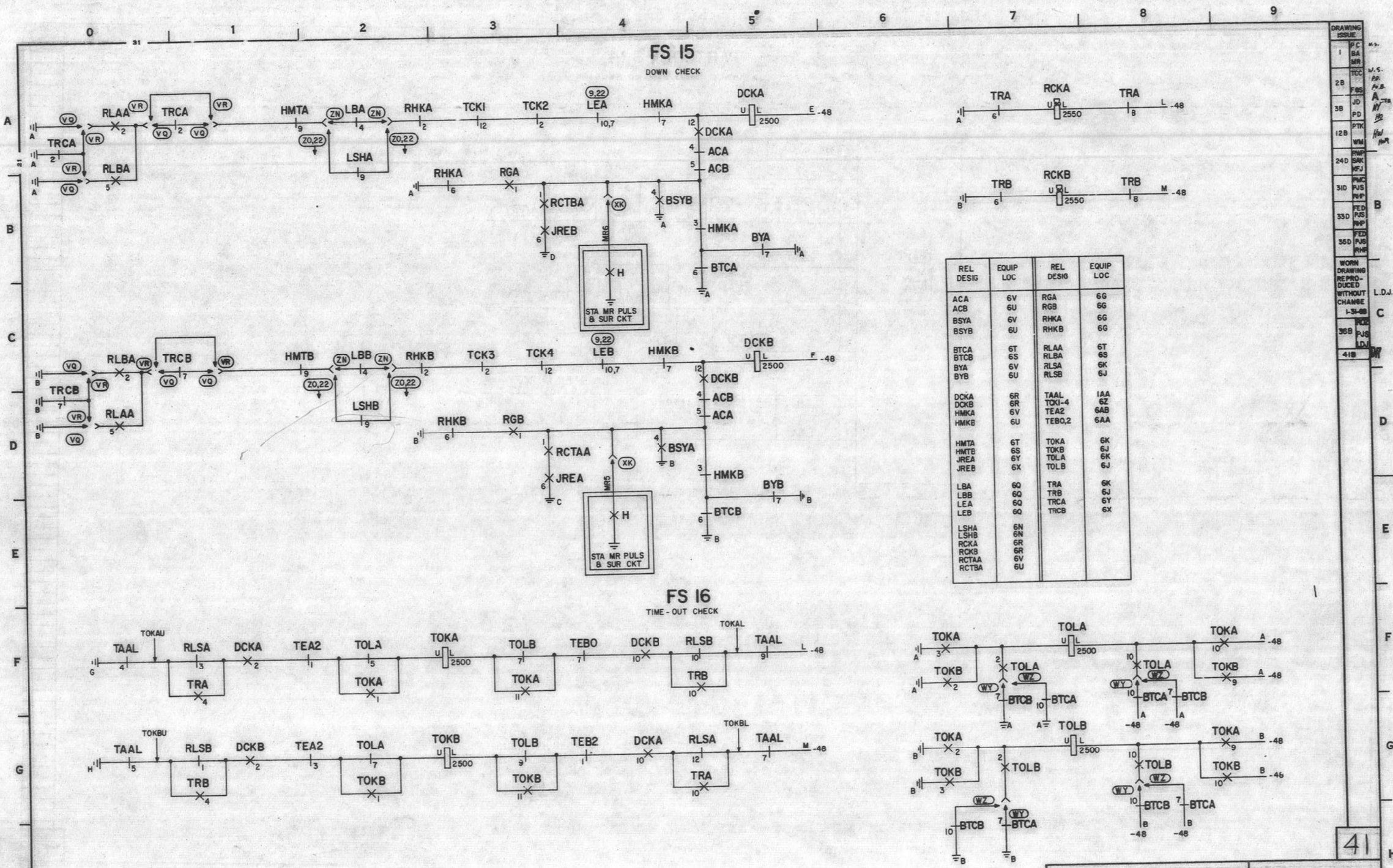

REL DESIG	EQUIP LOC	REL DESIG	EQUIP LOC
ACA	6V	RGA	6G
ACB	6U	RGB	6G
BSYA	6V	RHKA	6G
BSYB	6U	RHKB	6G
BTCA	6T	RLAA	6T
BTCB	6S	RLBA	6S
BYA	6V	RLSA	6K
BYB	6U	RLSB	6J
DCKA	6R	TAAL	1AA
DCKB	6R	TCKI-4	6Z
HMKA	6V	TEA2	6AB
HMKB	6U	TEBO,2	6AA
HMTA	6T	TOKA	6K
HMTB	6S	TOKB	6J
JREA	6Y	TOLA	6K
JREB	6X	TOLB	6J
LBA	6Q	TRA	6K
LBB	6Q	TRB	6J
LEA	6Q	TRCA	6Y
LEB	6Q	TRCB	6X
LSHA	6N		
LSHB	6N		
RCKA	6R		
RCKB	6R		
RCTAA	6V		
RCTBA	6U		

NOTES:
A. LEAD DESIGNATIONS INDICATED BY ARROWS APPLY TO LEADS BETWEEN MARKER UNITS

LINE, LINK, AND MARKER CIRCUIT (2)

SD-65741-01-B26

BELL TELEPHONE LABORATORIES INCORPORATED

6S

SD-65741-01-B26

PART OF FS 17

LINKS

(SEE NOTE 301 FOR ASSIGNMENT OF VERTICALS)

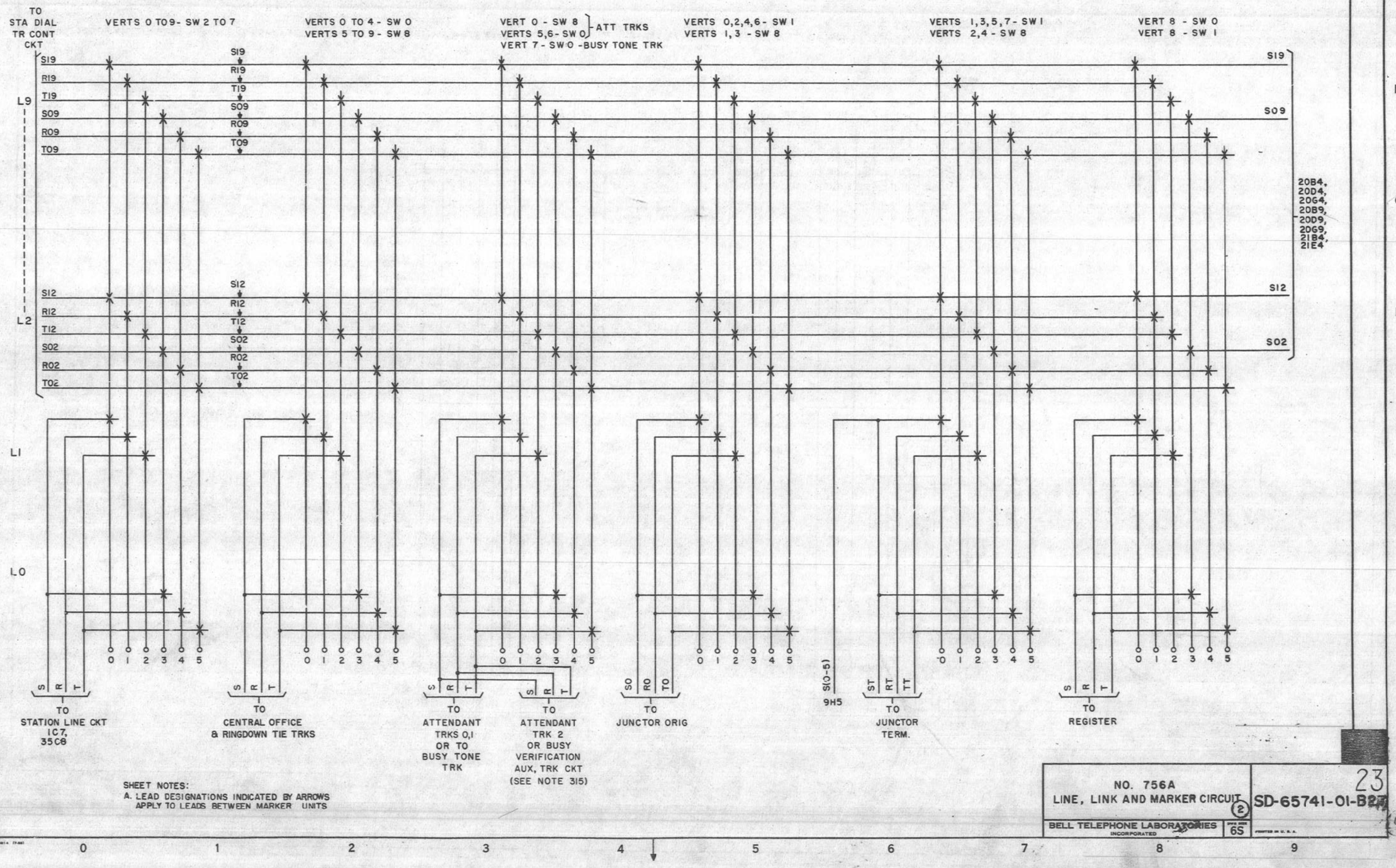

SHEET NOTES:

A. LEAD DESIGNATIONS INDICATED BY ARROWS APPLY TO LEADS BETWEEN MARKER UNITS

DRAWING ISSUE

1	
11B	
23D	

NO. 756A
LINE, LINK AND MARKER CIRCUIT (2)

BELL TELEPHONE LABORATORIES INCORPORATED

23
SD-65741-01-B27

SD-65741-01-B27

PART OF FS 17

LINKS

(SEE NOTE 301 FOR ASSIGNMENT OF VERTICALS)

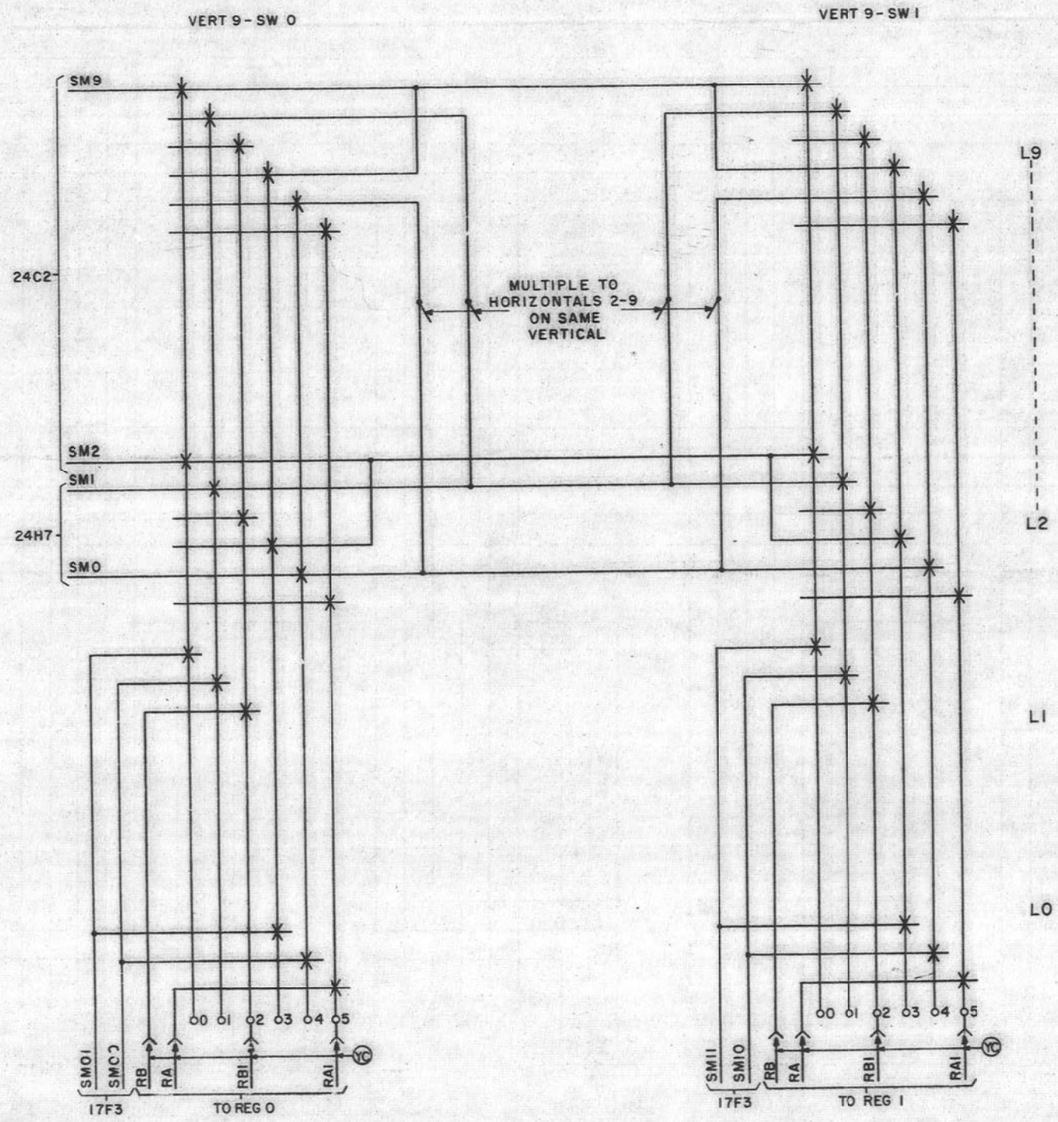

DRAWING ISSUE	
1	
16B	

PBX SYSTEMS
NO. 756A
LINE, LINK AND MARKER CIRCUIT (2)

BELL TELEPHONE LABORATORIES INCORPORATED

16

SD-65741-01-B28

SD-65741-01-B28

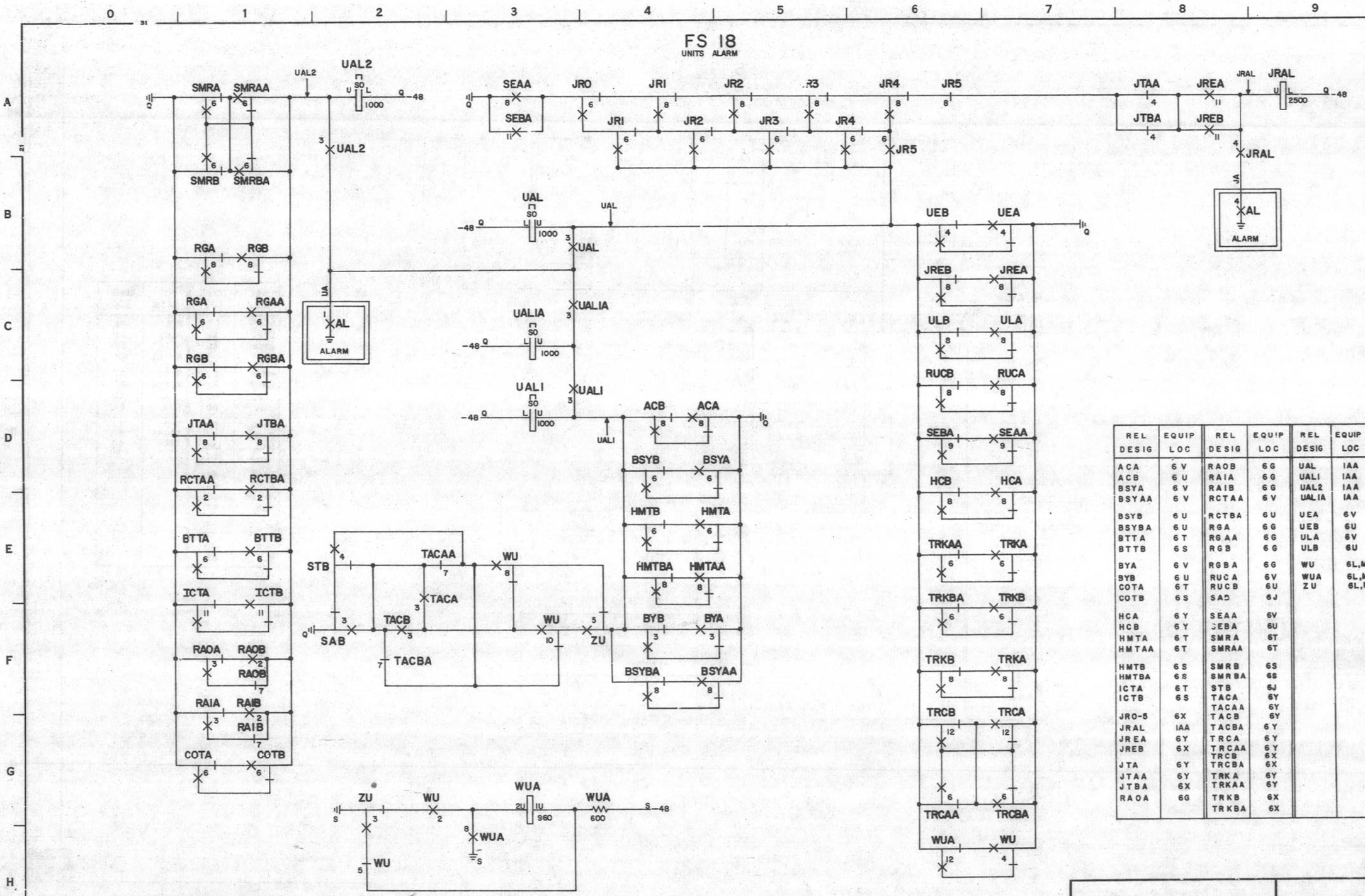

REL DESIG	EQUIP LOC	REL DESIG	EQUIP LOC	REL DESIG	EQUIP LOC
ACA	6 V	RAOB	6 G	UAL	IAA
ACB	6 U	RAIA	6 G	UALI	IAA
BSYA	6 V	RAIB	6 G	UAL2	IAA
BSYAA	6 V	RCTAA	6 V	UALIA	IAA
BSYB	6 U	RCTBA	6 U	UEA	6 V
BSYBA	6 U	RGA	6 G	UEB	6 U
BTTA	6 T	RGAA	6 G	ULA	6 V
BTTB	6 S	RGB	6 G	ULB	6 U
BYA	6 V	RGBA	6 G	WU	6L,M
BYB	6 U	RUCA	6 V	WUA	6L,M
COTA	6 T	RUCB	6 U	ZU	6L,M
COTB	6 S	SAB	6 J		
HCA	6 Y	SEAA	6 V		
HCB	6 Y	SEBA	6 U		
HMTA	6 T	SMRA	6 T		
HMTAA	6 T	SMRAA	6 T		
HMTB	6 S	SMRB	6 S		
HMTBA	6 S	SMRBA	6 S		
ICTA	6 T	STB	6 J		
ICTB	6 S	TACA	6 Y		
		TACAA	6 Y		
JRO-5	6 X	TACB	6 Y		
JRAL	IAA	TACBA	6 Y		
JREA	6 Y	TRCA	6 Y		
JREB	6 X	TRCAA	6 Y		
		TRCB	6 X		
JTA	6 Y	TRCBA	6 X		
JTAA	6 Y	TRKA	6 Y		
JTBA	6 X	TRKAA	6 Y		
RAOA	6 G	TRKB	6 X		
		TRKBA	6 X		

SHEET NOTES
A. LEAD DESIGNATIONS INDICATED BY ARROWS APPLY TO LEADS BETWEEN MARKER UNITS

DRAWING ISSUE		
1		WS
2B		WS
3B		JFD
4A		RAC
WORN DRAWING REPRODUCED WITHOUT CHANGE 12-1-66 ROZ		HW
33D	FED PJS RHP	

33

LINE, LINK, AND MARKER CIRCUIT

SD-65741-01-B29

BELL TELEPHONE LABORATORIES INCORPORATED

6S

SD-65741-01-B29

FS 19
RELEASE ALARM

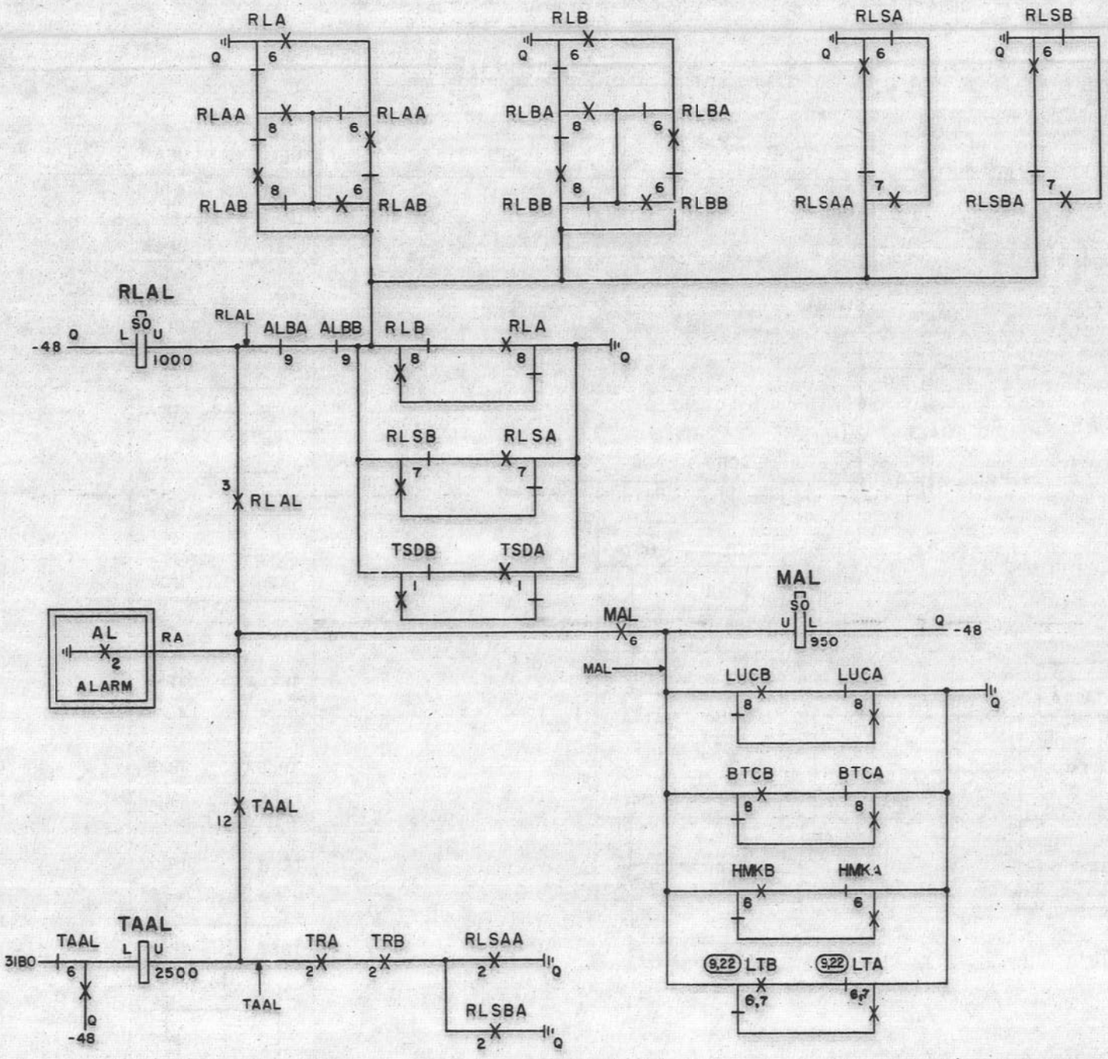

REL DESIG	EQUIP LOC	REL DESIG	EQUIP LOC
ALBA	6P	RLBA	6S
ALBB	6P	RLBB	6S
BTCA	6T	RLSA	6K
BTCB	6S	RLSAA	6K
DCKA	6R		
DCKB	6R	RLSB	6J
HMKA	6V	RLSBA	6J
HMKB	6U	TAAL	IAA
LTA	6Q	TRA	6K
LTB	6Q		
LUCA	6V	TRB	6J
LUCB	6U	TSDA	6R
MAL	IAB	TSDB	6R
RCKA	6R		
RCKB	6R		
RHKA	6G		
RHKB	6G		
RLA	6T		
RLAA	6T		
RLAB	6T		
RLAL	IAA		
RLB	6S		

SHEET NOTES
A. LEAD DESIGNATIONS INDICATED BY ARROWS APPLY TO LEADS BETWEEN MARKER UNITS

DRAWING ISSUE
1
2B
3B
4A
33D

LINE, LINK AND MARKER CIRCUIT (2)
BELL TELEPHONE LABORATORIES INCORPORATED
SD-65741-01-B30
33
65

SD-65741-01-B30

FS 20
TENS ALARM

REL DESIG	EQUIP LOC	REL DESIG	EQUIP LOC	REL DESIG	EQUIP LOC
ARBA	6AB	TCS4,5	3M	TRAO,I	6AB
ARBB	6AA	TCS6,7	4M	TRAL	IAA
MON2-7	SWBD	TEAO,3	6AB	TRCO,I	4Z
RCAO,I	6H	TEBO,3	6AA	TRMO,I	4Z
RCBO,I	6H				
RCCO,I	6H	THC2,3	2M	TRPO,I	6Z
RCDO,I	6H	THC4,5	3M	TRUO,I	4Z
RCEO,I	6H	THC6,7	4M	TU2,3	2M
RLAA	6T	TKO,9	4Z	TU4,5	3M
RLBA	6S	TK8	2L	TU6,7	4M
RO,I	6AA	TKAO,9	4Z		
RPO,I	6Z	TKA8	2L		
T2-5	6AA	TKBO,9	4Z		
T6,7	6AA	TKB8	2L		
TA2-5	6AB	TM2,3	2M		
TA6,7	6AB	TM4,5	3M		
TACAA	6Y	TM6,7	4M		
TACBA	6Y	TOKA	6K		
TAL	IAA	TOKB	6J		
TCKI-4	6Z	TP2-5	6Z		
TCS2,3	2M	TP6,7	6Z		
		TRO	6AB		
		TRI	6AA		

SHEET NOTES
A. LEAD DESIGNATIONS INDICATED BY ARROWS APPLY TO LEADS BETWEEN MARKER UNITS

DRAWING ISSUE		
1		
2B		
3B		
12B		P.O.B A
15A		
WORN DRAWING REPRODUCED WITHOUT CHANGE 1-2-63		
27D		
37B		

LINE, LINK, AND MARKER CIRCUIT — SD-65741-01-B31

BELL TELEPHONE LABORATORIES INCORPORATED — 65

37

SD-65741-01-B31

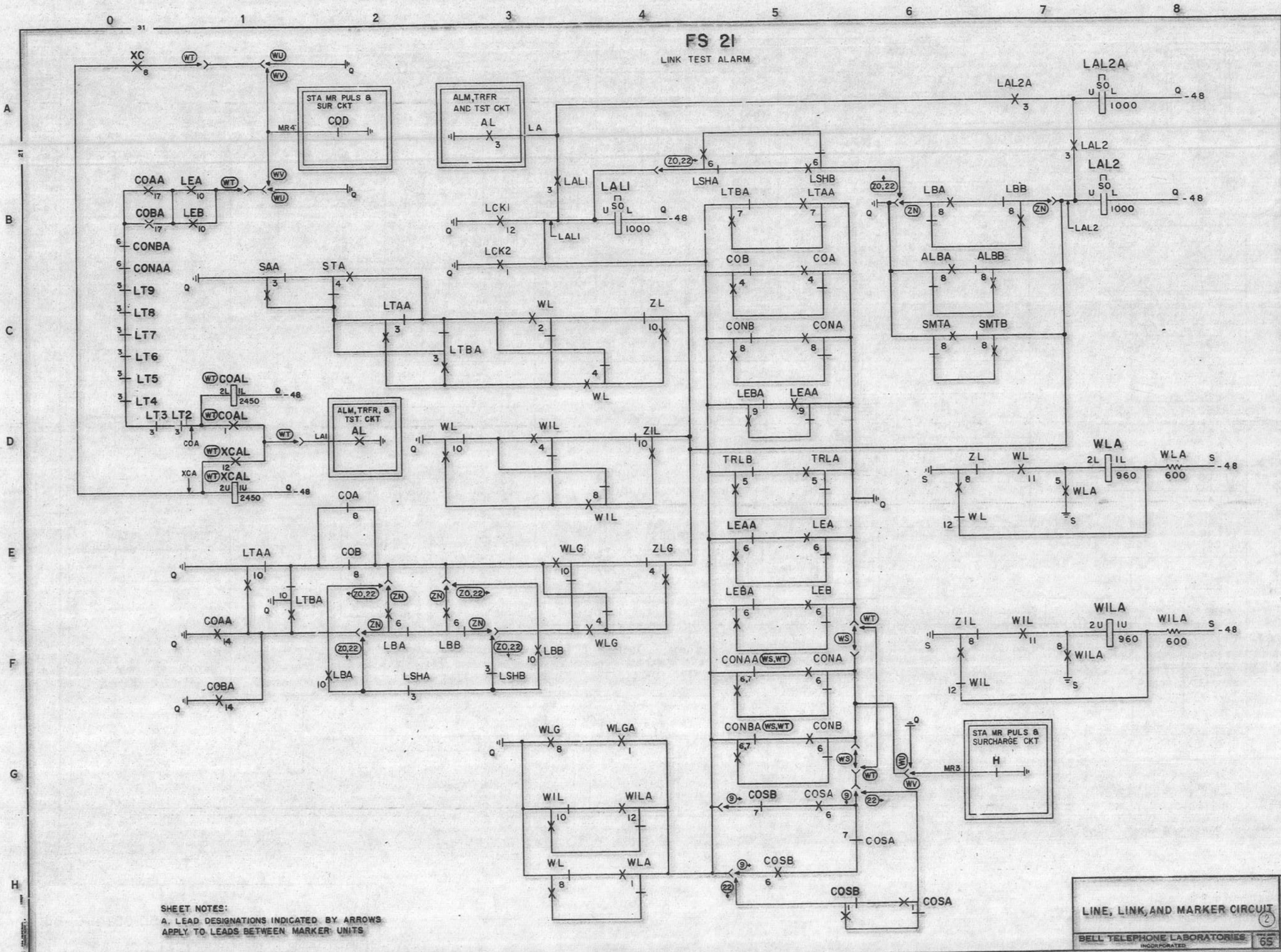

REL DESIG	EQUIP LOC
ALBA	6P
ALBB	6P
COA	6T
COAA	6R
COAL	1AB
COB	6S
COBA	6R
CONA	6T
CONAA	6T
CONB	6S
CONBA	6S
COSA	6P
COSB	6P
LALI	1AA
LAL2	1AA
LAL2A	1AA
LBA	6Q
LBB	6Q
LCKI	6P
LCK2	6P
LEA	6Q
LEAA	6Q
LEB	6Q
LEBA	6Q
LSHA	6N
LSHB	6N
LT2-9	6P
LTAA	6Q
LTBA	6Q
SAA	6K
SMTA	6Q
SMTB	6Q
STA	6K
TRLA	6Q
TRLB	6Q
WIL	6L,M
WILA	6L,M
WL	6L,M
WLA	6L,M
WLG	6L,M
WLGA	6L,M
ZIL	6L,M
ZL	6L,M
ZLG	6L,M
XC	6P
XCAL	1AB

DRAWING ISSUE	
1	
2B	
4A	
12B	
33D	FED PVS RHP
35D	FED PVS RHP
37B	ROZ PVS LDJ

SHEET NOTES:
A. LEAD DESIGNATIONS INDICATED BY ARROWS APPLY TO LEADS BETWEEN MARKER UNITS

LINE, LINK, AND MARKER CIRCUIT (2)

BELL TELEPHONE LABORATORIES INCORPORATED

SD-65741-01-B32

37

SD-65741-01-B32

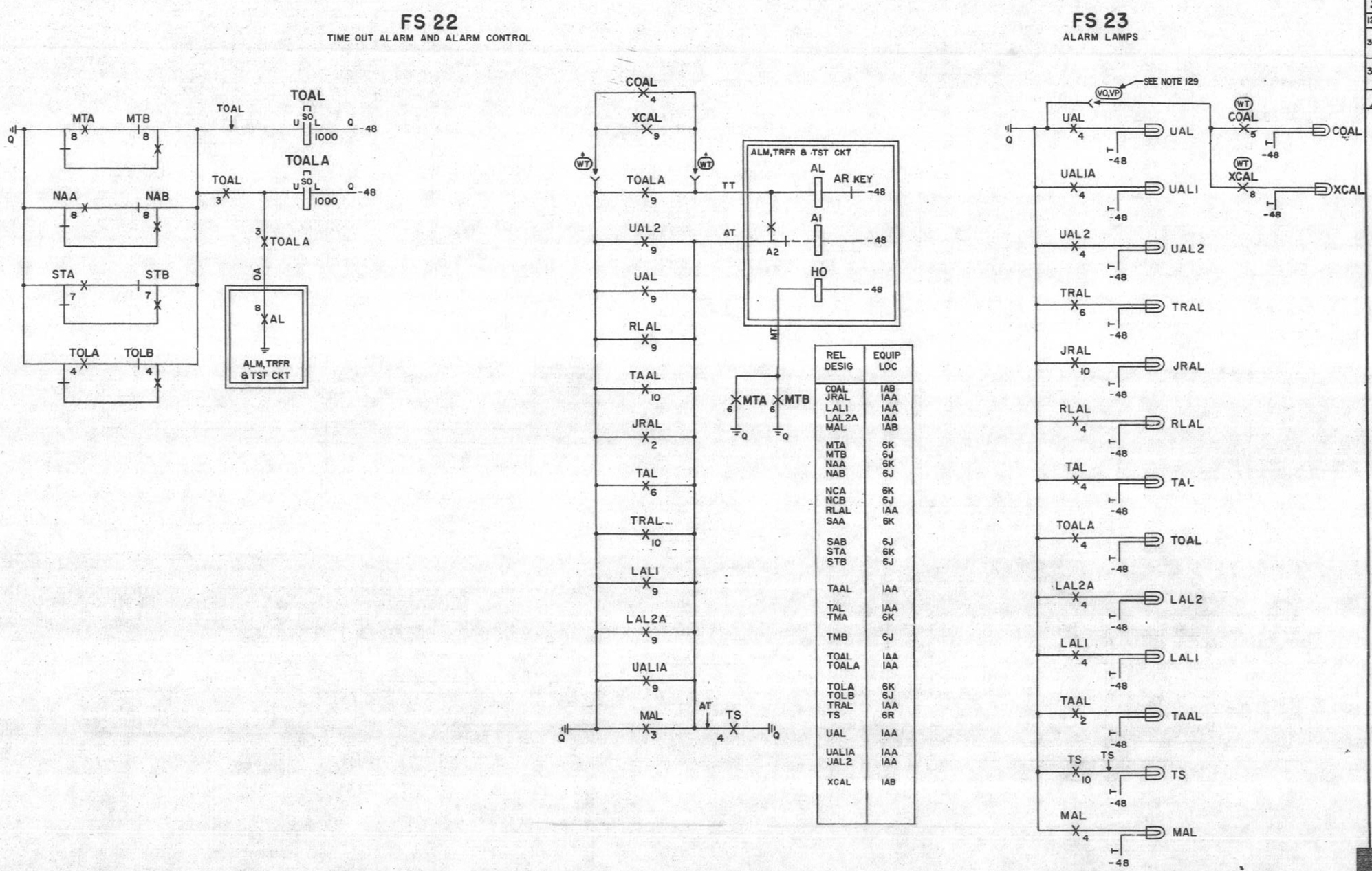

REL DESIG	EQUIP LOC
COAL	IAB
JRAL	IAA
LALI	IAA
LAL2A	IAA
MAL	IAB
MTA	6K
MTB	6J
NAA	6K
NAB	6J
NCA	6K
NCB	6J
RLAL	IAA
SAA	6K
SAB	6J
STA	6K
STB	6J
TAAL	IAA
TAL	IAA
TMA	6K
TMB	6J
TOAL	IAA
TOALA	IAA
TOLA	6K
TOLB	6J
TRAL	IAA
TS	6R
UAL	IAA
UALIA	IAA
JAL2	IAA
XCAL	IAB

SHEET NOTES:
A. LEAD DESIGNATIONS INDICATED BY ARROWS APPLY TO LEADS BETWEEN MARKER UNITS

LINE, LINK, AND MARKER CIRCUIT (2)

BELL TELEPHONE LABORATORIES INCORPORATED

SD-65741-01-B33

40

SD-65741-01-B33

FS 24

TRAFFIC REGISTER CONTROL

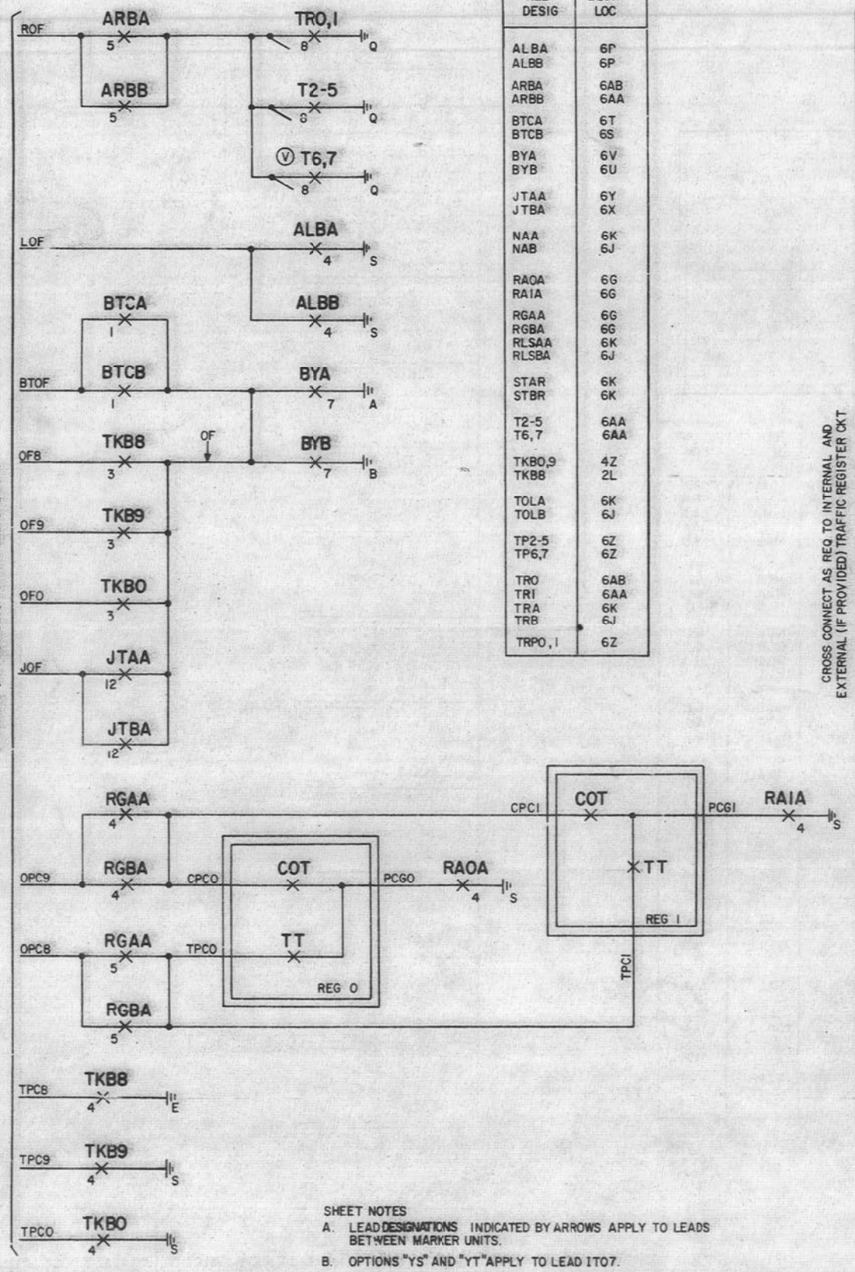

REL DESIG	EQUIP LOC
ALBA	6P
ALBB	6P
ARBA	6AB
ARBB	6AA
BTCA	6T
BTCB	6S
BYA	6V
BYB	6U
JTAA	6Y
JTBA	6X
NAA	6K
NAB	6J
RAOA	6G
RAIA	6G
RGAA	6G
RGBA	6G
RLSAA	6K
RLSBA	6J
STAR	6K
STBR	6K
T2-5	6AA
T6,7	6AA
TKB0,9	4Z
TKB8	2L
TOLA	6K
TOLB	6J
TP2-5	6Z
TP6,7	6Z
TRO	6AB
TRI	6AA
TRA	6K
TRB	6J
TRPO,I	6Z

CROSS CONNECT AS REQ TO INTERNAL AND EXTERNAL (IF PROVIDED) TRAFFIC REGISTER CKT

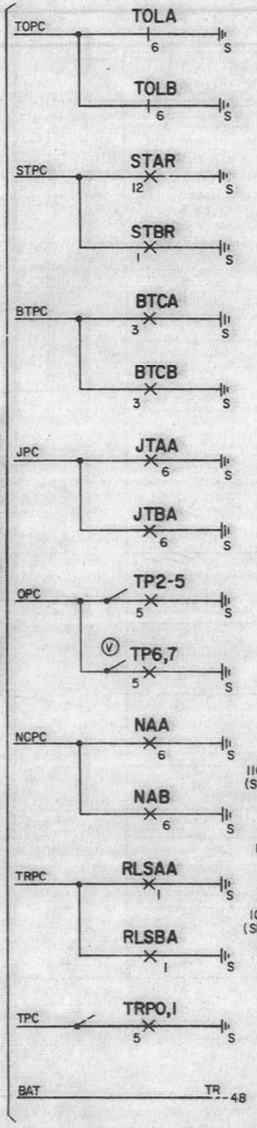

CROSS CONNECT AS REQ TO INTERNAL AND EXTERNAL (IF PROVIDED) TRAFFIC REGISTER CKT

TABLE I

RELAY CONTACT	ASSOCIATED LEAD DESIGNATION			
	TRMO	TRMI	TKO	TK9
1M	ST90 (B)	IT05 (B)	IT00 (A)	IT99(A)
2M	ST91 (B)		IT01 (A)	IT98 (A)
3M	ST92(B)		IT02 (A)	IT97 (A)
4M	ST93(B)			IT96 (A)
5M	ST94(B)			IT95 (A)
7M	IT06 (B)	ST95 (B)	IT05 (A)	IT94 (A)
9M	IT07 (B)	ST96 (B)	IT06 (A)	IT93 (A)
10M		ST97 (B)	IT07 (A)	IT92 (A)
11M		ST98 (B)		IT91 (A)
12M		ST99 (B)		IT90 (A)

FS 25

TRUNK HOLD MAGNET

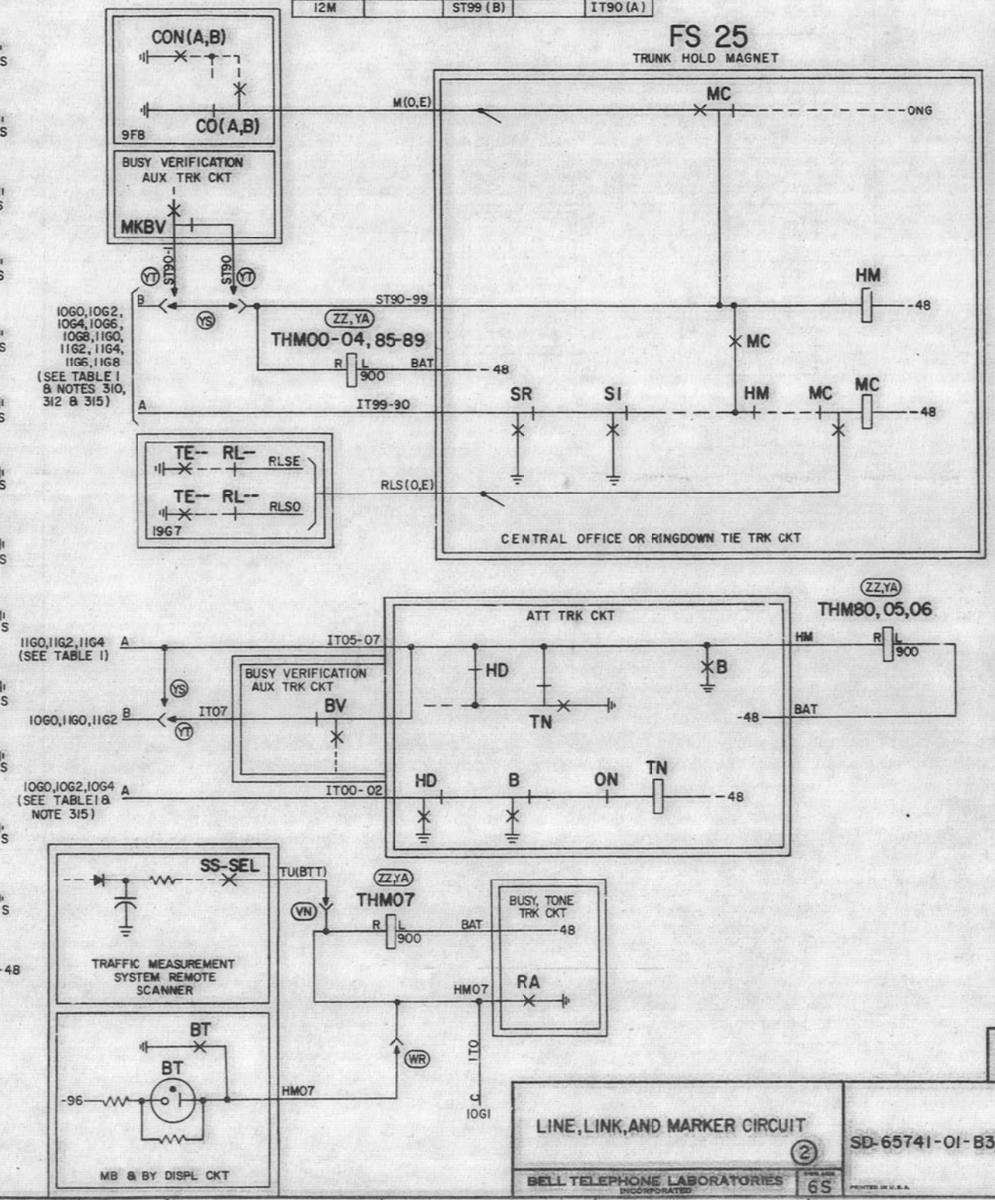

SHEET NOTES

A. LEAD DESIGNATIONS INDICATED BY ARROWS APPLY TO LEADS BETWEEN MARKER UNITS.

B. OPTIONS "YS" AND "YT" APPLY TO LEAD IT07.

WORN DRAWING REPRODUCED WITHOUT CHANGE 6-22-67 J.J.R.

DRAWING ISSUE		
1	6A	WS
2B	7CC	WS
3B	9F	JFD
6A	9L	TEB
9B	VZ	PD
11B	OL	POB
12B	PTR	POB
16B	JOS	HO
21B	FO	HO
23D	ZEN	HO
28D	RJS	HW9
32D	EWE	H.W.
33D	FED	
37B	ROZ	
40D		

4 H
4 J

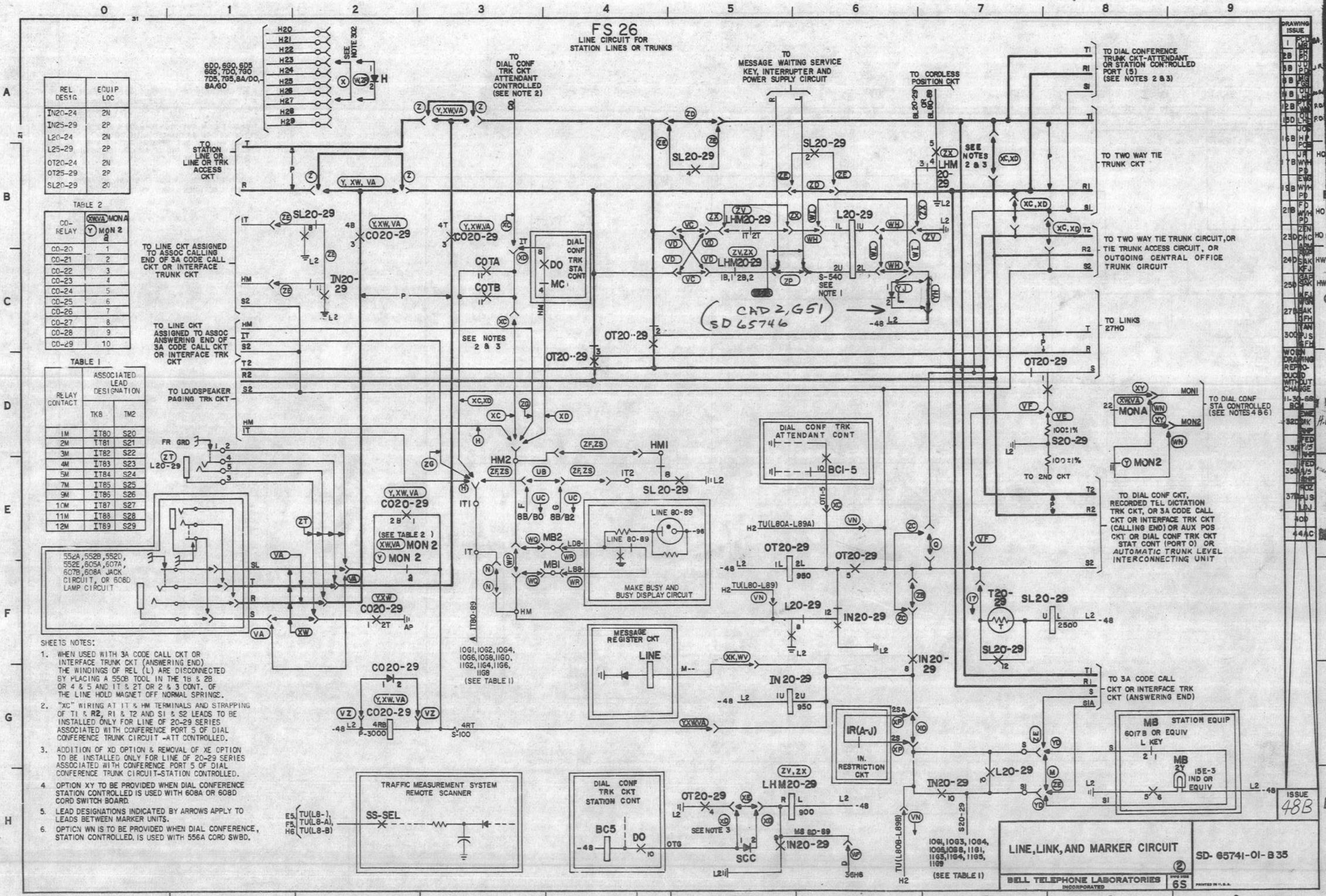

REL DESIG	EQUIP LOC
IN20-24	2N
IN25-29	2P
L20-24	2N
L25-29	2P
OT20-24	2N
OT25-29	2P
SL20-29	20

TABLE 2

CO-RELAY	XW,VA MON A / Y MON 2 a
CO-20	1
CO-21	2
CO-22	3
CO-23	4
CO-24	5
CO-25	6
CO-26	7
CO-27	8
CO-28	9
CO-29	10

TABLE 1

RELAY CONTACT	ASSOCIATED LEAD DESIGNATION TK8	TM2
1M	IT80	S20
2M	IT81	S21
3M	IT82	S22
4M	IT83	S23
5M	IT84	S24
7M	IT85	S25
9M	IT86	S26
10M	IT87	S27
11M	IT88	S28
12M	IT89	S29

SHEETS NOTES:

1. WHEN USED WITH 3A CODE CALL CKT OR INTERFACE TRUNK CKT (ANSWERING END) THE WINDINGS OF REL (L) ARE DISCONNECTED BY PLACING A 550B TOOL IN THE 1B & 2B OR 4 & 5 AND IT & 2T OR 2 & 3 CONT. OF THE LINE HOLD MAGNET OFF NORMAL SPRINGS.
2. "XC" WIRING AT IT & HM TERMINALS AND STRAPPING OF T1 & R2, R1 & T2 AND S1 & S2 LEADS TO BE INSTALLED ONLY FOR LINE OF 20-29 SERIES ASSOCIATED WITH CONFERENCE PORT 5 OF DIAL CONFERENCE TRUNK CIRCUIT -ATT CONTROLLED.
3. ADDITION OF XD OPTION & REMOVAL OF XE OPTION TO BE INSTALLED ONLY FOR LINE OF 20-29 SERIES ASSOCIATED WITH CONFERENCE PORT 5 OF DIAL CONFERENCE TRUNK CIRCUIT-STATION CONTROLLED.
4. OPTION XY TO BE PROVIDED WHEN DIAL CONFERENCE STATION CONTROLLED IS USED WITH 608A OR 608D CORD SWITCH BOARD.
5. LEAD DESIGNATIONS INDICATED BY ARROWS APPLY TO LEADS BETWEEN MARKER UNITS.
6. OPTION WN IS TO BE PROVIDED WHEN DIAL CONFERENCE, STATION CONTROLLED, IS USED WITH 556A CORD SWBD.

LINE, LINK, AND MARKER CIRCUIT

SD- 65741-01-B35

BELL TELEPHONE LABORATORIES INCORPORATED

DWG SIZE 6S

ISSUE 48B

SD- 65741-01-B35

PART OF FS 27

PAD CONTROL CIRCUIT FOR CONTROLLING
THE SWITCH PAD OF CODE 8 TIE TRUNKS
SEE SHEET NOTE 1

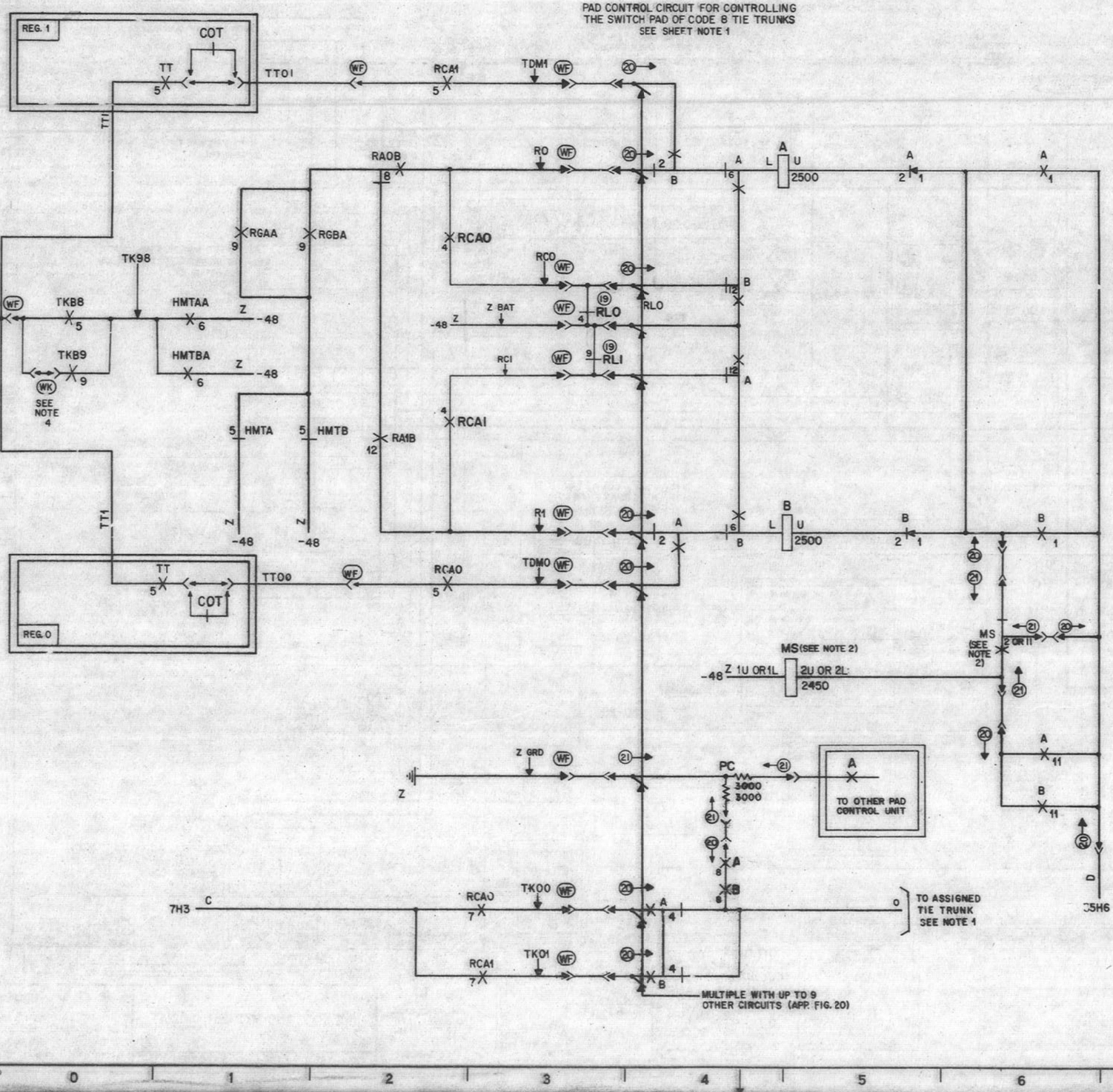

SHEET NOTES

1. A SET OF RELAYS CONSISTING OF RELAY A, RELAY B, AND RELAY MS IS TO BE ASSIGNED TO EACH TIE TRUNK FACILITY THAT SPECIFIES PAD CONTROL.
2. SPRINGS 1 TO 5 AND COIL TERMINALS 1L & 2L OF RELAY MS ARE ASSOCIATED WITH THE ONE CIRCUIT OF THE UNIT. SPRINGS 8 TO 12 AND COIL TERMINALS 1U AND 2U ASSOCIATED WITH THE OTHER CIRCUIT OF THE UNIT.
3. LEAD DESIGNATIONS INDICATED BY ARROWS APPLY TO LEADS BETWEEN MARKER UNITS.
4. IF OPTION WK IS NOT REQUIRED, INSTALLER SHALL REMOVE LEAD FROM CONTACT 9 MAKE OF RELAY TKB9.

RELAY DESIG	EQUIP LOC
A	EXT
B	EXT
HMTA	6T
HMTAA	6T
HMTB	6S
HMTBA	6T
MS	EXT
RAOB	6G
RA1B	6G
RCAO	6H
RCAI	6H
RGAA	6G
RGBA	6G
RLO	EXT
RLI	EXT
TKB8	2L
TKB9	4Z

DRAWING ISSUE
300 PJS
310 PJS RHP
HW
DR

31

LINE, LINK, AND MARKER CIRCUIT ②

BELL TELEPHONE LABORATORIES INCORPORATED

6S

SD-65741-01-B36

SD-65741-01-B36

PART OF FS 27

PAD CONTROL CIRCUIT FOR CONTROLLING
THE SWITCH PAD OF CODE 8 TIE TRUNKS

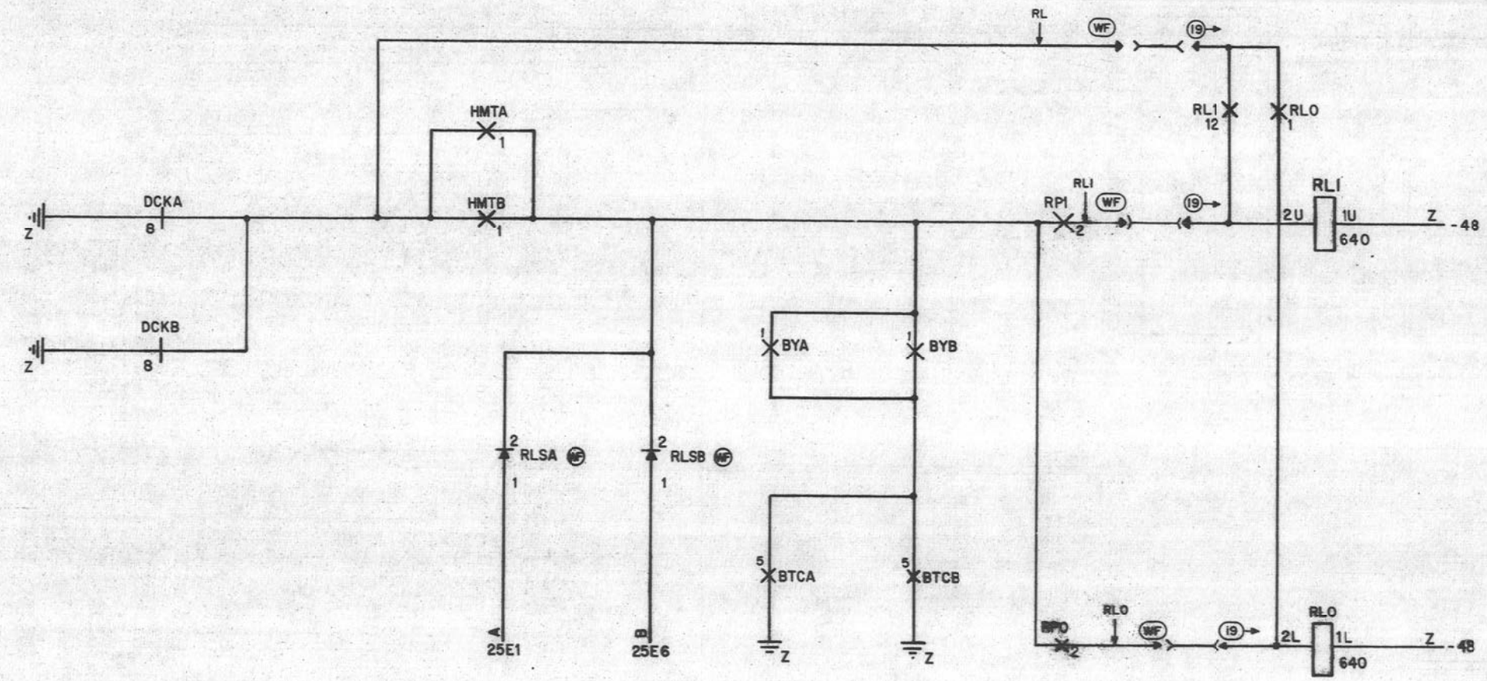

SHEET NOTES

1. LEAD DESIGNATIONS INDICATED BY ARROWS APPLY TO LEADS BETWEEN MARKER UNITS.

SD-65741-01-B37

34

LINE, LINK, AND MARKER CIRCUIT (2)

SD-65741-01-B37

BELL TELEPHONE LABORATORIES INCORPORATED

6S

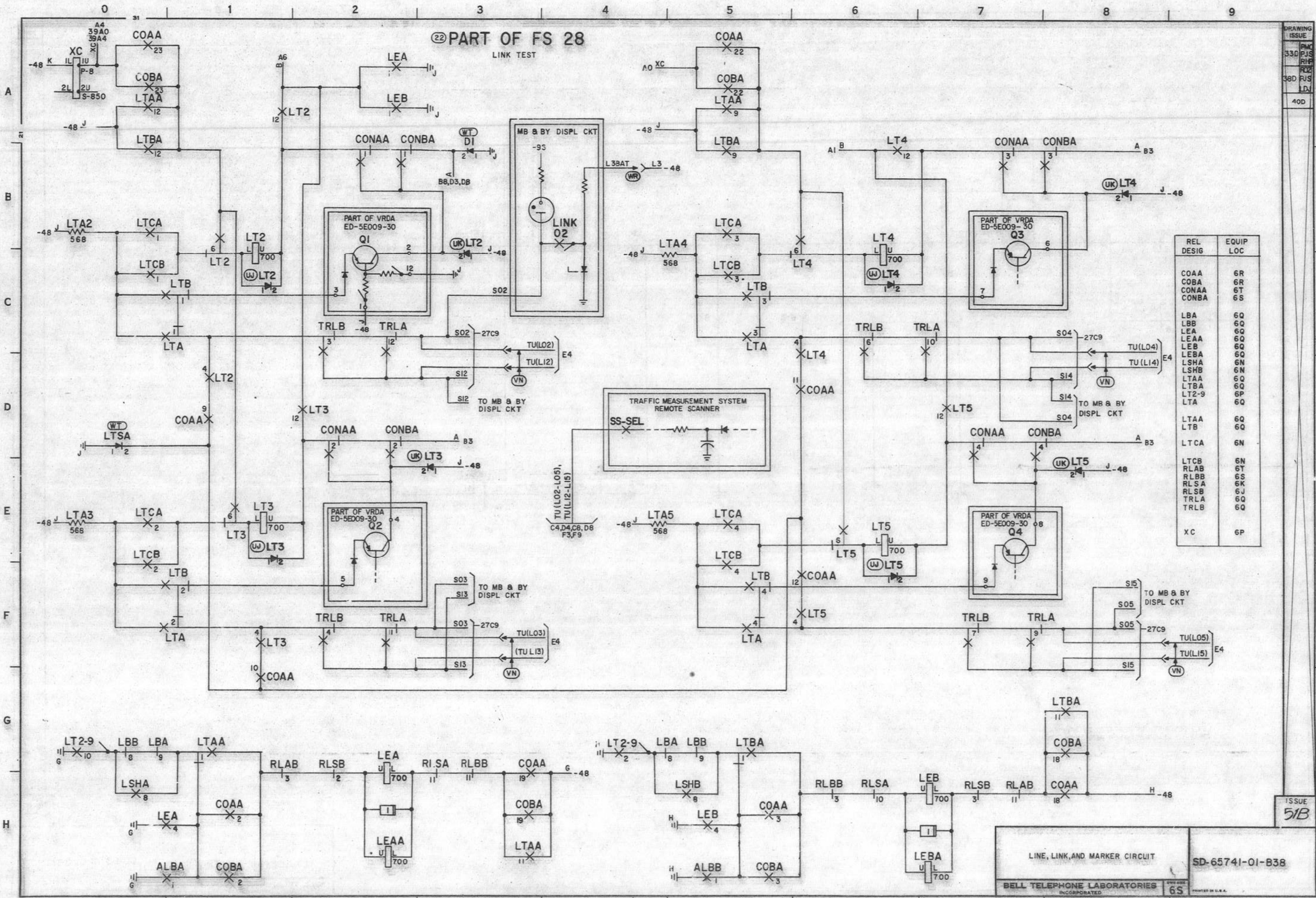

REL DESIG	EQUIP LOC
COAA	6R
COBA	6R
CONAA	6T
CONBA	6S
LBA	6Q
LBB	6Q
LEA	6Q
LEAA	6Q
LEB	6Q
LEBA	6Q
LSHA	6N
LSHB	6N
LTAA	6Q
LTBA	6Q
LT2-9	6P
LTA	6Q
LTAA	6Q
LTB	6Q
LTCA	6N
LTCB	6N
RLAB	6T
RLBB	6S
RLSA	6K
RLSB	6J
TRLA	6Q
TRLB	6Q
XC	6P

DRAWING ISSUE
33D PMC PJS RHP
38D RD2 PJS LDJ
40D

ISSUE 51B

LINE, LINK, AND MARKER CIRCUIT

SD-65741-01-B38

BELL TELEPHONE LABORATORIES INCORPORATED

DWG SIZE 6S

PRINTED IN U.S.A.

SD-65741-01-B38

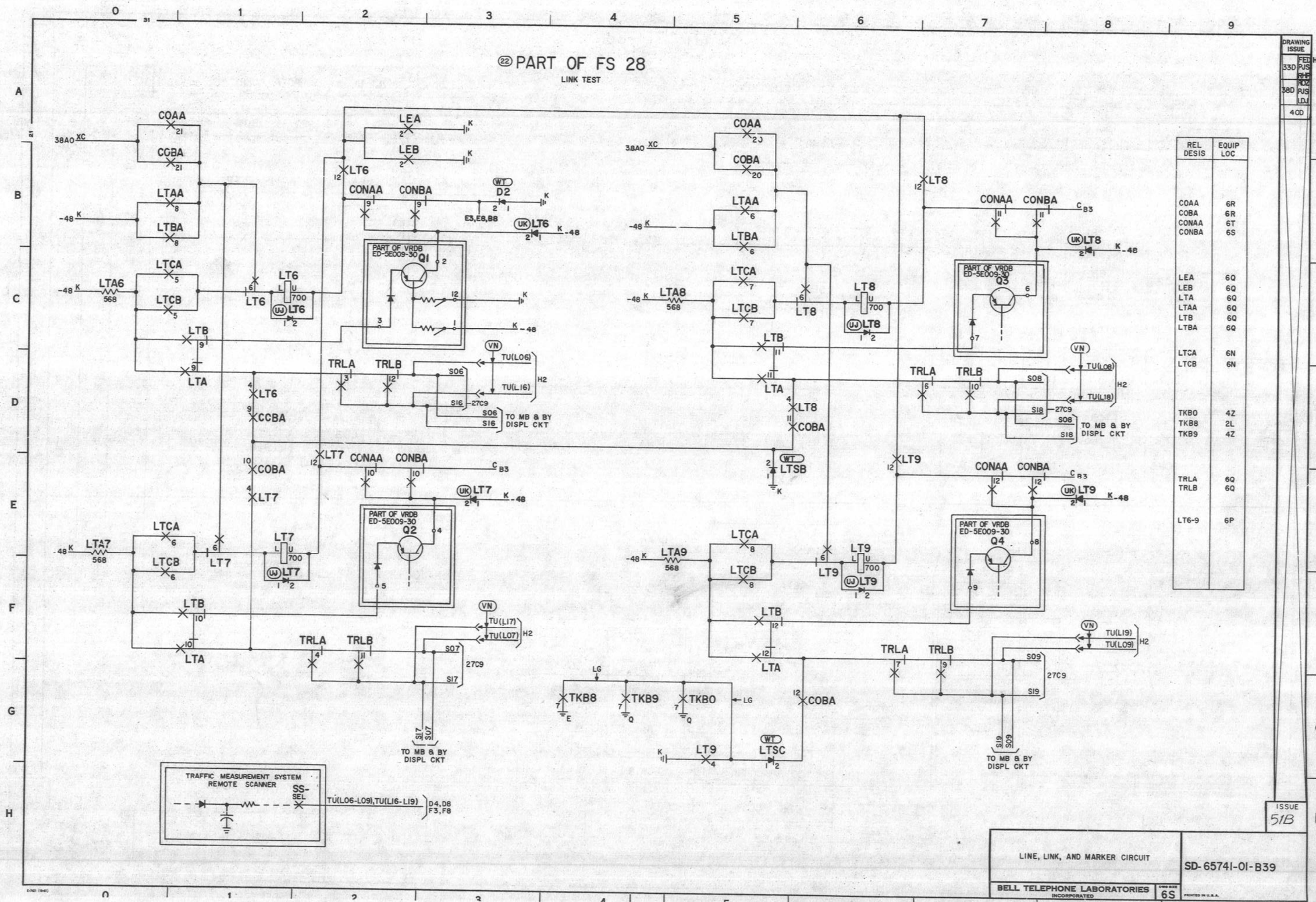

REL DESIS	EQUIP LOC
COAA	6R
COBA	6R
CONAA	6T
CONBA	6S
LEA	6Q
LEB	6Q
LTA	6Q
LTAA	6Q
LTB	6Q
LTBA	6Q
LTCA	6N
LTCB	6N
TKB0	4Z
TKB8	2L
TKB9	4Z
TRLA	6Q
TRLB	6Q
LT6-9	6P

DRAWING ISSUE	
33D	FED PJS RHF
38D	RDZ PJS LDJ
40D	

ISSUE 51B

LINE, LINK, AND MARKER CIRCUIT

SD-65741-01-B39

BELL TELEPHONE LABORATORIES INCORPORATED

DWG SIZE 6S

PRINTED IN U.S.A.

SD-65741-01-B39

(22) PART OF FS 28
LINK TEST

DRAWING ISSUE 33D JJR PJS RHP HW

LTA 6 COA 9 ALBA USOL 1000 LSHA 4 LT2 7 LT3 7 LT4 7 LT5 7 LT6 7 LT7 7 LT8 7 LT9 7 G-48
LBA USOL 2200 LBA 12 G-48
LBA 2 LSHA USOL 2500 G-48

LTB 6 COB 9 ALBB USOL 1000 LSHB 4 LT2 9 LT3 9 LT4 9 LT5 9 LT6 9 LT7 9 LT8 9 LT9 9 H-48
LBB USOL 2200 LBB 12 H-48
LBB 2 LSHB USOL 2500 H-48

STA MR PULS & SUR CKT H MR5 H MR6
LTA 5 CONA 5 LTCA U L 700 LBA 4 LBB 4 LSHA 10 LTA 8 CONA 10 G-48
LTB 5 CONB 5 LTCB U L 700 LBA 16 LBB 16 LSHB 10 LTB 8 CONB 10 H-48

XC 4 G
ALBA 12 G
COSA 1 2 COSA L U 700 -48 G
LEA 9 COSA 10 COAA 16 G
COTA 8 CONAA 8 TKBO,8,9 12 G
COSA 568
PART OF VRDA ED-5E009-30 Q5 11 10

18H5 NT (WJ) (SEE NOTE B)
TO CENT. OFF. TRK CW
COAA 4 COBA 4

PART OF VRDB ED-5E009-30 Q5 11 10
COSB 568
XC 6 H
COTB 8 CONBA 8 TKBO,8,9 11 H
COSB 1 2 COSB L U 700 -48 H
LEB 9 COSB 10 COBA 16 H
ALBB 12 H

AUX POS CKT
XP COSA RAC COSA1 XF G
COSB RAC COSB1 XF H
XF COSB

NOTES:
A. LEAD DESIGNATIONS INDICATED BY ARROWS APPLY TO LEADS BETWEEN MARKER UNITS.
B WHEN OPTION WJ IS REQUIRED THE INSTALLER SHALL ADD A STRAP BETWEEN 4 MAKE OF RELAY COAA AND 6 BREAK OF RELAY NT.

LEBA 4 LTA U L 700 10 LEAA 8 RCTA 10 JREA E-48
LTAA U L 700 RGA 2 E-48

LEAA 4 LTB U L 700 10 LEBA 8 RCTB 10 JREB F-48
LTBA U L 700 RGB 2 F-48

TRLA U L 700 ZLG 2 J-48
TRLB U L 700 ZLG 6 K-48

LTAA S 2 COAA S 13 LBA 5 LBB 5 7 LBB 7 LBA ZLG 8 WLGA 11 2L 960 S-48
LTBA S 2 COBA S 13 WLGA 2 WLG U L 950 S-48
ZLG U L 950 WLG 2 WLGA 5 WLGA 600 S-48

REL DESIG	EQUIP LOC
ALBA	6P
ALBB	6P
COA	6T
COAA	6R
COB	6S
COBA	6R
CONA	6T
CONAA	6T
CONB	6S
CONBA	6S
COSA	6P
COSB	6P
COTA	6T
COTB	6S
JREA	6Y
JREB	6X
LBA	6Q
LBB	6Q
LEA	6Q
LEAA	6Q
LEB	6Q
LEBA	6Q
LSHA	6N
LSHB	6N
LT2-9	6P
LTA	6Q
LTAA	6Q
LTB	6Q
LTBA	6Q
RCTA	6Y
RCTB	6X
RGA	6G
RGB	6G
TKBO	4Z
TKB8	2L
TKB9	4Z
TRLA	6Q
TRLB	6Q
WLG	6M
WLGA	6M
ZLG	6M

33

LINE, LINK, AND MARKER CIRCUIT (2) SD-65741-01-B40
BELL TELEPHONE LABORATORIES INCORPORATED 6S PRINTED IN U.S.A.

SD-65741-01-B40

APP FIG. I

RELAY

DESIG	IN20-29		OT20-29		L20		L21		L22		L23		L24		L25		L26		L27		L28		L29		DESIG
CODE	[10] AK7				AF141		AF141		AF141		AF141		AF141		AF141		AF141		AF141		AF141		AF141		CODE
OPTION																									OPTION
	CONT ARR	LOC	CONT ARR	LOC	CONT ARR	LOC	CONT ARR	LOC	CONT ARR	LOC	CONT ARR	LOC	CONT ARR	LOC	CONT ARR	LOC	CONT ARR	LOC	CONT ARR	LOC	CONT ARR	LOC	CONT ARR	LOC	
12	EBM	35F6																							12
11	EBM	35C2																							11
10	EBM	35H7			M	35H7	M	35H7	M	35H7	M	35H7	M	35H7	M	35H7	M	35H7	M	35H7	M	35H7	M	35H7	10
9	EM	35H5																							9
8	EM	35G6			EBM	35F5	EBM	35F5	EBM	35F5	EBM	35F5	EBM	35F5	EBM	35F5	EBM	35F5	EBM	35F5	EBM	35F5	EBM	35F5	8
7																									7
6					EMB	6B3	EMB	6F3	EMB	6B8	EMB	6F8	EMB	783	EMB	7F3	EMB	7B8	EMB	7F8	EMB	8A/C3	EMB	8A/F3	6
5			EM	35F6																					5
4			EM	35H5	M	3A0	M	3A0	M	3A0	M	3A0	M	3A0	M	3A0	M	3A0	M	3A0	M	3A0	M	3A0	4
3			EBM	35C4																					3
2			EBM	35C5																					2
1			EBM	35D7																					1
COIL		35G5		35F5		3586		3586		3586		3586		3586		3586		3586		3586		3586		3586	COIL

RELAY
(K) EA26
(G) EA44

	L30	L31	L32	L33	L34	L35	L36	L37	L38	L39
	(K,G)	(K,G)	(K,G)	(K,G)	(K,G)	(K,G)	(K,G)	(K,G)	(K,G)	(K,G)
	6C3	6G3	6C8	6G8	7C3	7G3	7C8	7G8	8A/C3	8A/G3
	3C0	3C0	3C0	3C0	3C0	3C0	3C0	3C0	3C0	3C0
	1D6	1D6	1D6	1D6	1D6	1D6	1D6	1D6	1D6	1D6

DESIG	SMC2		SMC3		TCS2		TCS3		THC2		THC3		TK8		TKA8		TK88		TM2		TM3				DESIG
CODE	AF24		AF24		AF132		AF132		AF132		AF132		AF132		AF132		AF132		AF132		AF132				CODE
OPTION																									OPTION
	CONT ARR	LOC	CONT ARR	LOC	CONT ARR	LOC	CONT ARR	LOC	CONT ARR	LOC	CONT ARR	LOC	CONT ARR	LOC	CONT ARR	LOC	CONT ARR	LOC	CONT ARR	LOC	CONT ARR	LOC	CONT ARR	LOC	
12	M	23F7	M	23F7	M	1BH3	M	1BH3	M	8A/G0	M	8A/G0	M	11G7	M	8A/G0	M	C	M	11G8	M	11G8			12
11	M	23G7	M	23G7	M	1BG3	M	1BG3	M	8A/D0	M	8A/D0	M	11G6	M	8A/D1	M	b	M	11G6	M	11G6			11
10	M	24H6	M	24H6	M	1BF3	M	1BF3	M	7G5	M	7G5	M	11G4	M	7H5	M	5A/D2	M	11G4	M	11G4			10
9	M	24F4	M	24F4	M	1BF3	M	1BF3	M	7D5	M	7D5	M	11G2	M	7D5	M	a	M	11G3	M	11G3			9
8	M	24E4	M	24E4	BM	19G4	BM	19G4	BM	3IC0	BM	3IC0	BM	19D4	BM	19E4	BM	4B2	BM	31G6	BM	31G5			8
7	M	24D4	M	24D4	M	1BE3	M	1BE3	M	7G0	M	7G0	M	11G1	M	7H0	M	a	M	11G1	M	11G1			7
6	M	24D4	M	24D4	BM	31B0	BM	31B0	BM	24D1	BM	24E1	BM	31C8	BM	31C9	BM	31E7	BM	31F6	BM	31F5			6
5	M	24C4	M	24C4	M	1BE3	M	1BE3	M	7D0	M	7D0	M	10G7	M	7D1	M	36C0	M	10G8	M	10G8			5
4	M	24B4	M	24B4	M	1BD3	M	1BD3	M	6G5	M	6G5	M	10G6	M	6H5	M	34G0	M	10G6	M	10G6			4
3	M	24B4	M	24B4	M	1BC3	M	1BC3	M	6D5	M	6D5	M	10G4	M	6D5	M	34D0	M	10G4	M	10G4			3
2	M	24A4	M	24A4	M	1BC3	M	1BC3	M	6G0	M	6G0	M	10G2	M	6G0	M	24D1	M	10G3	M	10G3			2
1	M	24G6	M	24G6	M	1BB3	M	1BB3	M	6D0	M	6D0	M	10G0	M	6E1	M	24A1	M	10G1	M	10G1			1
COIL		24D0		24E0		4A0		4D0		4B0		4D0		5B/B3		5B/C3		5B/C3		4C0		4E0			COIL

DIODE

DESIG	LOC	CODE
(W) H	35A2	KS-15724,L2
(ZR) H	35A2	426A
(YG) H	6F5	426A
(YG) H	7H4	426A
(YJ) L	35C6	426A
(XG) SCC	35H5	446F

NETWORK

DESIG	LOC	CODE
(VG) TM2	4C0	186A
(VG) TM3	4E0	186A
TM8	5A/D6	186A
(VH) THC2	4B0	186A
(VH) THC3	4D0	186A
TK8	5B/B3	186A

a (WC) 21E1 / (22) 39G4
b (9) 22E6 / (22) 40H5
c (9) 22D6 / (22) 40F5
d (UL) 5A/H2 / (YX) 5A/H3

RESISTOR

DESIG	LOC	CODE
[10] S20-29	35D7	19FG
(YN) TKB8	5B/D3	KS-14603, L1A, 1000

DESIG	TU2		TU3																				DESIG
CODE	AF132		AF132																				CODE
OPTION																							OPTION
	CONT ARR	LOC	CONT ARR	LOC	CONT ARR	LOC	CONT ARR	LOC	CONT ARR	LOC	CONT ARR	LOC	CONT ARR	LOC	CONT ARR	LOC	CONT ARR	LOC	CONT ARR	LOC	CONT ARR	LOC	
12	M	8A/F2	M	8A/G2																			12
11	M	8A/C2	M	8A/C2																			11
10	M	7F8	M	7G8																			10
9	M	7B8	M	7C8																			9
8	BM	31B0	BM	31B0																			8
7	M	7F3	M	7G3																			7
6	BM	a	BM	a																			6
5	M	7B3	M	7C3																			5
4	M	6F8	M	6G8																			4
3	M	6B8	M	6C8																			3
2	M	6F3	M	6G3																			2
1	M	6B3	M	6C3																			1
COIL		4D0		4E0																			COIL

(VG) 3IC0 / a / (VH) 4C2

(VG) 3IC0 / a / (VH) 4F2

DESIG																							DESIG
CODE																							CODE
OPTION																							OPTION
	CONT ARR	LOC	CONT ARR	LOC	CONT ARR	LOC	CONT ARR	LOC	CONT ARR	LOC	CONT ARR	LOC	CONT ARR	LOC	CONT ARR	LOC	CONT ARR	LOC	CONT ARR	LOC	CONT ARR	LOC	
12																							12
11																							11
10																							10
9																							9
8																							8
7																							7
6																							6
5																							5
4																							4
3																							3
2																							2
1																							1
COIL																							COIL

DRAWING ISSUE		
1	PS, MLE	W.S., T.E.
3B	JJD, PD	JFD
5D	RMH, CHD	RAC,
1B	G.C., LME	PAB
2B	PTP, WMH	A P.O.B.
16B	JGS, LA, POB	
17B	LJE, WVH, PB	HJD
20AC	EWG, GS, WVH, PD	H.O.
WORK DRAWING AS PRODUCED WITHOUT CHANGE 12-27-63		B
23D	EFM, DHC, AKM	PD
25D	GAP, SAK, MFJ, MPA	HW
29B	AFH, PTP, PJS, EFW	C
30D	PJS, EFW, EWE, SAK, RHP	HW, H.W.
32B	FED, PJS, RHP	
33D	ROZ, PJS, LDJ	D
37B		

APP FIG. 2

RELAY																																							
DESIG	TCS4		TCS5		TSC6		TCS7		THC4		THC5		THC6		THC7		TM4		TM5		TM6		TM7		DESIG
CODE	AF132		AF132		AF132		AF132		AF132		AF132		AF132		AF132		AF132		AF132		AF132		AF132		CODE
OPTION					V		V						V		V						V		V		OPTION
	CONT ARR	LOC	CONT ARR	LOC	CONT ARR	LOC	CONT ARR	LOC	CONT ARR	LOC	CONT ARR	LOC	CONT ARR	LOC	CONT ARR	LOC	CONT ARR	LOC	CONT ARR	LOC	CONT ARR	LOC	CONT ARR	LOC	
12	M	18H3	M	18H3	M	18H3	M	18H3	M	8A/G0	M	8A/G0	M	8A/G0	M	8A/G0	M	11G8	M	11G8	M	11G8	M	11G8	12
11	M	18G3	M	18G3	M	18G3	M	18G3	M	8A/D0	M	8A/D0	M	8A/D0	M	8A/D0	M	11G6	M	11G6	M	11G6	M	11G6	11
10	M	18F3	M	18F3	M	18F3	M	18F3	M	7G5	M	7G5	M	7G5	M	7G5	M	11G4	M	11G4	M	11G4	M	11G4	10
9	M	18F3	M	18F3	M	18F3	M	18F3	M	7D5	M	7D5	M	7D5	M	7D5	M	11G3	M	11G3	M	11G3	M	11G3	9
8	BM	19G4	BM	19G4	BM	19G4	BM	19G4	BM	31D0	BM	31D0	BM	31F0	BM	31F0	BM	31G5	BM	31G4	BM	31G3	BM	31G3	8
7	M	18E3	M	18E3	M	18E3	M	18E3	M	7G0	M	7G0	M	7G0	M	7G0	M	11G1	M	11G1	M	11G1	M	11G1	7
6	BM	31C0	BM	31C0	BM	31E0	BM	31E0	BM	24E1	BM	24F1	BM	24F1	BM	24G1	BM	31F4	BM	31F4	BM	31F3	BM	31F2	6
5	M	18E3	M	18E3	M	18E3	M	18E3	M	7D0	M	7D0	M	7D0	M	7D0	M	10G8	M	10G8	M	10G8	M	10G8	5
4	M	18D3	M	18D3	M	18D3	M	18D3	M	6G5	M	6G5	M	6G5	M	6G5	M	10G6	M	10G6	M	10G6	M	10G6	4
3	M	18C3	M	18C3	M	18C3	M	18C3	M	6D5	M	6D5	M	6D5	M	6D5	M	10G4	M	10G4	M	10G4	M	10G4	3
2	M	18C3	M	18C3	M	18C3	M	18C3	M	6G0	M	6G0	M	6G0	M	6G0	M	10G3	M	10G3	M	10G3	M	10G3	2
1	M	18B3	M	18B3	M	18B3	M	18B3	M	6D0	M	6D0	M	6D0	M	6D0	M	10G1	M	10G1	M	10G1	M	10G1	1
COIL		4F0		4A3		4D3		4F3		4G0		4B3		4D3		4G3		4H0		4C3		4E3		4H3	COIL

RELAY																																							
DESIG	TU4		TU5		TU6		TU7																																DESIG
CODE	AF132		AF132		AF132		AF132																																CODE
OPTION					V		V																																OPTION
	CONT ARR	LOC	CONT ARR	LOC	CONT ARR	LOC	CONT ARR	LOC	CONT ARR	LOC	CONT ARR	LOC	CONT ARR	LOC	CONT ARR	LOC	CONT ARR	LOC	CONT ARR	LOC	CONT ARR	LOC	CONT ARR	LOC	CONT ARR	LOC	CONT ARR	LOC	CONT ARR	LOC	CONT ARR	LOC	CONT ARR	LOC	CONT ARR	LOC	
12	M	8A/G2	M	8A/G2	M	8A/G2	M	8A/G2																															12
11	M	8A/C2	M	8A/C2	M	8A/C2	M	8A/C2																															11
10	M	7G8	M	7G8	M	7G8	M	7G8																															10
9	M	7C8	M	7C8	M	7C8	M	7C8																															9
8	BM	31C0	BM	31C0	BM	31E0	BM	31E0																															8
7	M	7G3	M	7G3	M	7G3	M	7G3																															7
6	BM	a	BM	a	BM	a	BM	a																															6
5	M	7C3	M	7C3	M	7C3	M	7C3																															5
4	M	6G8	M	6G8	M	6G8	M	6G8																															4
3	M	6C8	M	6C8	M	6C8	M	6C8																															3
2	M	6G3	M	6G3	M	6G3	M	6G3																															2
1	M	6C3	M	6C3	M	6C3	M	6C3																															1
COIL		4G0		4B3		4E3		4G3																															COIL
	VG 3ID0		VG 3ID0		VI 3IF0		VI 3IF0																																
	a		a		a		a																																
	VH 4H2		VH 4C5		VJ 4F5		VJ 4H5																																

DIODE

DESIG	LOC	CODE
W H	1G3	KS-15724, L2
ZR H	1G3	426A

NETWORK

DESIG	LOC	CODE
VH THC4	4G0	186A
VH THC5	4B3	186A
VJ THC6	4D3	186A
VJ THC7	4G3	186A
VG TM4	4H0	186A
VG TM5	4C3	186A
VI TM6	4F3	186A
VI TM7	4H3	186A

RELAY K EA26, G EA44

	L40	L41	L42	L43	L44	L45	L46	L47	L48	L49	L50	L51	L52	L53	L54	L55	L56	L57	L58	L59
	K,G	K,G	K,G	K,G	K,G	K,G	K,G	K,G	K,G	K,G	K,G	K,G	K,G	K,G	K,G	K,G	K,G	K,G	K,G	K,G
	6C3	6G3	6C8	6G8	7C3	7G3	7C8	7F8	8A/C3	8A/G3	6C3	6G3	6C8	6G8	7C3	7G3	7G8	7F8	8A/C3	8A/G3
	3A3	3A3	3A3	3A3	3A3	3A3	3A3	3A3	3A3	3A3	3C3	3C3	3C3	3C3	3C3	3C3	3C3	3C3	3C3	3C3
	ID6	ID6	ID6	ID6	ID6	ID6	ID6	ID6	ID6	ID6	ID6	ID6	ID6	ID6	ID6	ID6	ID6	ID6	ID6	ID6

RELAY F EA26, E EA44

	L60	L61	L62	L63	L64	L65	L66	L67	L68	L69	L70	L71	L72	L73	L74	L75	L76	L77	L78	L79
	E,F	E,F	E,F	E,F	E,F	E,F	E,F	E,F	E,F	E,F	E,F	E,F	E,F	E,F	E,F	E,F	E,F	E,F	E,F	E,F
	6C3	6G3	6C8	6G8	7C3	7G3	7G8	7F8	8A/C3	8A/G3	6C3	6G3	6C8	6G8	7C3	7G3	7G8	7F8	8A/C3	8A/G3
	3A6	3A6	3A6	3A6	3A6	3A6	3A6	3A6	3A6	3A6	3C6	3C6	3C6	3C6	3C6	3C6	3C6	3C6	3C6	3C6
	ID6	ID6	ID6	ID6	ID6	ID6	ID6	ID6	ID6	ID6	ID6	ID6	ID6	ID6	ID6	ID6	ID6	ID6	ID6	ID6

DESIG																									DESIG
CODE																									CODE
OPTION																									OPTION
	CONT ARR	LOC	CONT ARR	LOC	CONT ARR	LOC	CONT ARR	LOC	CONT ARR	LOC	CONT ARR	LOC	CONT ARR	LOC	CONT ARR	LOC	CONT ARR	LOC	CONT ARR	LOC	CONT ARR	LOC	CONT ARR	LOC	
12																									12
11																									11
10																									10
9																									9
8																									8
7																									7
6																									6
5																									5
4																									4
3																									3
2																									2
1																									1
COIL																									COIL

APP FIG. 3

RELAY																																							
DESIG	MON2		(5)MON3-7																																				DESIG
CODE	AJ5		AJ5																																				CODE
OPTION	Y		Y																																				OPTION
	CONT ARR	LOC	CONT ARR	LOC	CONT ARR	LOC	CONT ARR	LOC	CONT ARR	LOC	CONT ARR	LOC	CONT ARR	LOC	CONT ARR	LOC	CONT ARR	LOC	CONT ARR	LOC	CONT ARR	LOC	CONT ARR	LOC	CONT ARR	LOC	CONT ARR	LOC	CONT ARR	LOC	CONT ARR	LOC	CONT ARR	LOC	CONT ARR	LOC	
12	EBM	31B6	EBM	31B6																																			12
11	EBM	35E8	EBM																																				11
10	EBM	35F2	EBM	1E3																																			10
9	EBM	35F2	EBM	1E3																																			9
8	EBM	35F2	EBM	1E3																																			8
7	EBM	35F2	EBM	1E3																																			7
6	EBM	35F2	EBM	1E3																																			6
5	EBM	35F2	EBM	1E3																																			5
4	EBM	35F2	EBM	1E3																																			4
3	EBM	35F2	EBM	1E3																																			3
2	EBM	35F2	EBM	1E3																																			2
1	EBM	35F2	EBM	1E3																																			1
COIL		1F3		1F3																																			COIL

DESIG	MON A	MON B	MON C	
CODE	AJ205	AJ205	AJ205	
OPTION	XW,VA	XW,VA	XX,VB	
	LOC	LOC	LOC	LOC
24				
23				
22	35D9			
21	31B6	31B6	31B6	
20	1E3	1E3	1E3	
19	↓	↓	↓	
18				
17				
16				
15				
14				
13				
12				
11	↓			
10	35F2			
9				
8				
7				
6				
5				
4				
3				
2				
1	↓	↓	↓	↓
COIL	1H2	1H2	1H2	

RELAY (Y,XW,VA) C0-20-29, C0-30-79 (Y), C0-30-59 (XW,VA), C0-60-79 (XX,VB)

EA43

35B3	1D3
35F2	1E3
35H3	1E4
35E2	1E3
35B2	1D2

JACK

DESIG	LOC	CODE
ZT L20-29	35F2	365
ZT L30-79	1D1	365

NETWORK

DESIG	LOC	CODE	QTY
Y [61] MON2-7	1G3	185A	6
XW,VA MONA,B	1H2	186A	2
XX,VB MON C	1H2	186A	1

DIODE

DESIG	LOC	CODE
VZ (10) C020-29	35G2	446F
VZ (50) C030-79	1D4	446F

DRAWING ISSUE

1	AC, MJ, MKB
2B	ZD
3B	MJ, PE
5D	CWJ
2B	PM, BLH, MJ
3D	MJ, ABJ
16B	JW3, MJ, ABJ
22AC	JW8, RG, PG
24D	GAP, SAK, KFJ
25D	GAP, SAK, KFJ
27D	EVE, SMK, GFH
32D PCN#1	EVE, CMK, RHP
37B	RDZ, PJS, LDJ
44AC	

LINE, LINK, AND MARKER CIRCUIT

BELL TELEPHONE LABORATORIES, INC

ISSUE 46D

SD-65741-01-C2

PART OF APP FIG. 4

RELAY

DESIG	A0		B1		ARBA		ARBB		ATB		INT		IN8		RO		R1		RPO		DESIG
CODE	AK6				AF55		AF55		AK37				AF515		AJ12		AJ12		AF77		CODE
OPTION	UC								UC				UC								OPTION
	CONT ARR	LOC	CONT ARR	LOC	CONT ARR	LOC	CONT ARR	LOC	CONT ARR	LOC	CONT ARR	LOC	CONT ARR	LOC	CONT ARR	LOC	CONT ARR	LOC	CONT ARR	LOC	
12	BM	6G2			M	2D7	M	2F7	EBM	5B/D2			BM	8B/B1	EBM	2D7	EBM	2G7	M	5A/A2	12
11	BM	7D2			M	2F7	M	2H7	EBM	5B/C2			M		EBM		EBM	2E7	M	5A/H6	11
10	BM				BM	3F2	BM	3G3	M	5B/A7			BM	8B/B1	EBM	3F1	EBM	3F2	M	13B6	10
9	BM				M	2B9	M	2C9	B	5B/E1					EBM	31C7	EBM	31C7	M	13E6	9
8	BM	5A/H2			BM	31F1	BM	25A/F4	EBM	5B/D1			BM	8B/B1	EBM	3G2	EBM	3G2	M	d	8
7					B	25A/F5	B	25A/F9					B		EBM	1G2	EBM	1G2	M	c	7
6					BM	25A/F0	BM	31F1					BM	8B/B1	EBM	2E0	EBM	2E0	M	17F3	6
5			BM	5A/H2	M	34A0	M	34B0			B				EBM	2G0	EBM	2G0	M	17E3	5
4			BM		BM	3F3	BM	3H2			B		BM	8B/B1	EBM	3H1	EBM	3H2	M	b	4
3			BM		M	2B7	M	2C7					M		EBM		EBM	2D7	M	a	3
2			BM	7C2	M	2F8	M	2H8			EBM		BM	8B/B1	EBM	3F1	EBM	3F2	M	e	2
1			BM	6G2	M	2D8	M	2E8			M	8B/A1	M	8B/A1	EBM	2D8	EBM	2G8	M	31D3	1
COIL		5B/D1		5B/E1		2A8		2C8				5B/A1		8B/A1		2E8		2G8		3G1	COIL

(A, VR) 25A/E0
a (B) 16B2

(A, VR) 25A/E5
b (B) 16E2

(A, VR) 25A/E9
c (B) 16E6

(A, VR) 25A/E4
d (B) 16B6

e (WE) 5A/H5
(WF) 37E5

RELAY

DESIG	RP1				T2		T3		T4		T5		T6		T7				TA2		DESIG
CODE	AF77				AJ12		AJ12		AJ12		AJ12		AJ12		AJ12				AJ31		CODE
OPTION													V		V						OPTION
	CONT ARR	LOC	CONT ARR	LOC	CONT ARR	LOC	CONT ARR	LOC	CONT ARR	LOC	CONT ARR	LOC	CONT ARR	LOC	CONT ARR	LOC	CONT ARR	LOC	CONT ARR	LOC	
12	M	5A/E2			EBM	3B2	EBM	3D2	EBM	3B5	EBM	3D5	EBM	3B8	EBM	3D8					12
11	M	5A/H6			EBM	31E5	EBM	31E5	EBM	31E5	EBM	31E5	EBM	31E5	EBM	31E5					11
10	M	13B6			EBM	31B3	EBM	31B3	EBM	31B3	EBM	31B3	EBM	31C3	EBM	31C3			M	2C5	10
9	M	13F6			EBM	3F4	EBM	3F5	EBM	3F6	EBM	3F7	EBM	3F7	EBM	3F8			B	3A2	9
8	M	d			EBM	34B1	EBM	34B1	EBM	34B1	EBM	34B1	EBM	34B1	EBM	34B1			M		8
7	M	c			EBM	3G5	EBM	3G5	EBM	3G6	EBM	3G7	EBM	3G8	EBM	3G8			B	31E4	7
6	M	17F3			EBM	31G8	EBM	31G8	EBM	31G8	EBM	31G8	EBM	31G8	EBM	31G8			M	31E3	6
5	M	17E3			EBM	3F5	EBM	3F5	EBM	3F6	EBM	3F7	EBM	3F8	EBM	3F8			B	3A1	5
4	M	b			EBM	2F0	EBM	2F0	EBM	2F0	EBM	2F0	EBM	2F0	EBM	2F0			M	31B7	4
3	M	a			EBM	3H4	EBM	3H5	EBM	3H6	EBM	3H7	EBM	3H7	EBM	3H8					3
2	M	e			EBM	2H0	EBM	2H0	EBM	2H0	EBM	2H0	EBM	2H0	EBM	2H0			M	2C4	2
1	M	31D3			EBM	3B1	EBM	3D1	EBM	3B4	EBM	3D4	EBM	3B7	EBM	3D7					1
COIL	M	3G2				3A1		3C1		3A5		3C4		3A8		3C8				2D4	COIL

(A, VR) 25A/E0
a (B) 16B2

(A, VR) 25A/E5
b (B) 16E2

(A, VR) 25A/E9
c (B) 16E6

(A, VR) 25A/E4
d (B) 16B6

e (WE) 5A/H5
(WF) 37B5

RELAY

DESIG	TA3		TA4		TA5		TA6		TA7				TCK1		TCK2		TCK3		TCK4		DESIG
CODE	AJ31		AJ31		AJ31		AJ31		AJ31				AK3				AK3				CODE
OPTION							V		V												OPTION
	CONT ARR	LOC	CONT ARR	LOC	CONT ARR	LOC	CONT ARR	LOC	CONT ARR	LOC	CONT ARR	LOC	CONT ARR	LOC	CONT ARR	LOC	CONT ARR	LOC	CONT ARR	LOC	
12													BM	26A3					BM	26C3	12
11													BM	31A2					BM	31B2	11
10	M	2C5	M	2C5	M	2C5	M	2D6	M	2D6											10
9	B	3C2	B	3A5	B	3C5	B	3A8	B	3C8											9
8	M		M		M		M		M												8
7	B	31E4	B	31E4	B	31E4	B	31E4	B	31E4											7
6	M	31B3	M	31B3	M	31B3	M	31C3	M	31C3											6
5	B	3C1	B	3A4	B	3C4	B	3A7	B	3C7											5
4	M	31B7	M	31B7	M	31B7	M	31B7	M	31B7											4
3																					3
2	M	2C4	M	2C4	M	2C4	M	2D3	M	2D3					BM	26A3	BM	26C3			2
1															BM	31A2	BM	31A3			1
COIL		2D4		2D4		2D4		2D4		2D4				3F0		3G0		3F0		3H0	COIL

RELAY

DESIG	TEA0		TEA1		TEA2		TEA3				TEB0		TEB1		TEB2		TEB3				DESIG
CODE	AF55		AF129		AF129		AF119				AF55		AF129		AF129		AF119				CODE
OPTION																					OPTION
	CONT ARR	LOC	CONT ARR	LOC	CONT ARR	LOC	CONT ARR	LOC	CONT ARR	LOC	CONT ARR	LOC	CONT ARR	LOC	CONT ARR	LOC	CONT ARR	LOC	CONT ARR	LOC	
12	M	16C5	M		M	25A/F4	EM	3D8			M	16G5	M	13F6	M	2F?/G4	EM	3D7			12
11	M	3D4	B	3C3	B	2E7	M	8A/D8			M	3D4	B	3C5	B	2E8	M	8A/D8			11
10	BM	2B5	BM		BM	25A/F9	M	8A/F8			BM	2C5	BM		BM	25A/F9	M	8A/G8			10
9	M	3B4	B	3A4	B	2E8	B	3C7			M	3B4	B	3A5	B	2F7	B	3C9			9
8	BM		BM	31B7	BM	3F1	M	3G1			BM		BM	31B6	BM	3F1	M	3G1			8
7	B		B	3C0	B	2G7	B	3A7			B	26F4	B	3C2	B	2G8	B	3A9			7
6	BM	31B6	BM	31B6	BM	31B6	EM	3B8			BM	31B6	BM	31B6	BM	31B6	EM	3B7			6
5	M	3D1	B	3A0	B	2G8	B	31C6			M	3D1	B	3A2	B	2G7	B	31C6			5
4	BM	2B4	BM		BM	25A/F5	M	19G6			BM	2C4	BM		BM	25A/F5	M	19G6			4
3	M	3B1	B	2C1	B	26G1					M	3B1	B	2C2	B						3
2	M	2D1	M	18E5	M	25A/F0	M	19G6			M	2D1	M	18F5	M	25A/F0	M	19G6			2
1	M	2B1	B	2A1	B	26F1	M	16D3			M	2B1	B	2A2	B	26G3	M	16G3			1
COIL		2E1		2F1		2F1		2F1				2G1		2H1		2H1		2H1			COIL

DRAWING ISSUE

ISSUE 53D DR

LINE, LINK, AND MARKER CIRCUIT

(2) SD-65741-01-C3A

BELL TELEPHONE LABORATORIES INCORPORATED

DWG SIZE 6S

PRINTED IN U.S.A.

PART OF APP FIG. 4

DESIG	TP2		TP3		TP4		TP5		TP6		TP7				TR0		TR1				DESIG
CODE	AF77		AF77		AF77		AF77		AF77		AF77				AJ12		AJ12				CODE
									V		V										OPTION
OPTION	CONT ARR	LOC	CONT ARR	LOC	CONT ARR	LOC	CONT ARR	LOC	CONT ARR	LOC	CONT ARR	LOC	CONT ARR	LOC	CONT ARR	LOC	CONT ARR	LOC	CONT ARR	LOC	
12	M	4A1	M	4D1	M	4F1	M	4A4	M	4D4	M	4F4			EBM	2B2	EBM	2D2			12
11	M	2D5	M	2D5	M	2D5	M	2D5	M	2D5	M	2D5			EBM	31E5	EBM	31E5			11
10	M	17E8	M	17E8	M	17E8	M	17E8	M	17F8	M	17F8			EBM	31B3	EBM	31B3			10
9	M	17G8	M	17G8	M	17G8	M	17G8	M	17G8	M	17G8			EBM	3F3	EBM	3F4			9
8	M	31E5	M	31E5	M	31E5	M	31E5	M	31E5	M	31E5			EBM	34A1	EBM	34A1			8
7	M	31D3	M	31D3	M	31D3	M	31D3	M	31E3	M	31E3			EBM	3G3	EBM	3G4			7
6	M	1F2	M	1F2	M	1F2	M	1F2	M	1G2	M	1G2			EBM	31F8	EBM	31F8			6
5	M	34E4	M	34E4	M	34E4	M	34E4	M	34E4	M	34E4			EBM	3F3	EBM	3F4			5
4	M	2D4	M	2D4	M	2D4	M	2D4	M	2D3	M	2D3			EBM	2F0	EBM	2F0			4
3	M	4C6	M	4C6	M	4C6	M	4C6	M	4C6	M	4C6			EBM	3H3	EBM	3H4			3
2	M	4B6	M	4B6	M	4B6	M	4B6	M	4B6	M	4B6			EBM	2H0	EBM	2H0			2
1	M	4A0	M	4D0	M	4F0	M	4A3	M	4D3	M	4F3			EBM	2B1	EBM	2D1			1
COIL		3G4		3G5		3G6		3G7		3G8		3G8				2A1		2C1			COIL

DESIG	TRA0		TRA1				TRP0		TRP1												DESIG
CODE	AJ31		AJ31				AF77		AF77												CODE
OPTION																					OPTION
	CONT ARR	LOC	CONT ARR	LOC	CONT ARR	LOC	CONT ARR	LOC	CONT ARR	LOC	CONT ARR	LOC	CONT ARR	LOC	CONT ARR	LOC	CONT ARR	LOC	CONT ARR	LOC	
12							M	4D8	M	4F8											12
11							M	2A5	M	2A5											11
10	M	2B5	M	2B5			M	17F8	M	17F8											10
9	B	2A2	B	2C2			M	17H8	M	17H8											9
8	M		M				M	31E5	M	31E5											8
7	B	31E5	B	31E5			M	31D3	M	31D3											7
6	M	31B3	M	31B3			M	1F2	M	1F2											6
5	B	2B1	B	2C1			M	34G4	M	34G4											5
4	M	31B7	M	31B7			M	2A4	M	2A4											4
3							M	4C6	M	4C6											3
2	M	2B4	M	2D4			M	4A6	M	4A6											2
1							M	4D7	M	4F7											1
COIL		2A4		2A4				3G3		3G4											COIL

	DIODE DESIG	LOC	CODE
	A0	5B/D1	446F
	ATB1	5B/C2	
	ATB2	5B/C1	
	B1	5B/E1	
UC	INT1	5B/A0	
	INT2	5B/A1	
	INB	8B/A1	
	TKB	5B/B2	446F
	TP2	3F4	YM 420G, VK 446F
	TP3	3F5	
YM,VK	TP4	3F6	
	TP5	3F7	
	TP6	3F7	
V,YM,VK	TP7	3F8	
	TRP0	3F3	
YM,VK	TRP1	3F3	YM 420G, VK 446F
UH	U4	7A1	446F
UG	U5	7E1	
UF	U6	7A6	
UE	U7	7E6	
UD	U8	8A/B1	
UC	U9	8A/E1	446F

	NETWORK DESIG	LOC	CODE
	TA2	2D4	185A
	TA3	2D4	
	TA4	2D4	
	TA5	2D4	
V	TA6	2E4	185A
	TA7	2E4	186A
	TEA1	2F1	186A
	TEB1	2H1	
	TRA0	2B4	185A
	TRA1	2B4	185A

	THERMISTOR DESIG	LOC	CODE
UC	ATB	5B/A7	8C

ISSUE 48B

LINE, LINK, AND MARKER CIRCUIT

SD-65741-01-C3B

BELL TELEPHONE LABORATORIES INCORPORATED

SD-65741-01-C3B

APP FIG. 5

RELAY

DESIG	RA0A		RA0B		RA1A		RA1B		RCA0		RCA1		RCB0		RCB1		RCC0		RCC1		RCD0		RCD1		DESIG
CODE	AJ5		AF129		AJ5		AF129		AF132		AF132		AF111		AF111		AF132		AF132		AF132		AF132		CODE
OPTION																									OPTION
	CONT ARR	LOC	CONT ARR	LOC	CONT ARR	LOC	CONT ARR	LOC	CONT ARR	LOC	CONT ARR	LOC	CONT ARR	LOC	CONT ARR	LOC	CONT ARR	LOC	CONT ARR	LOC	CONT ARR	LOC	CONT ARR	LOC	
12	EBM	17B8	M		EBM	17D8	M	36 D2	M	10H0	M	10H0	EM	9B2	EM	9B2	M	8A/H1	M	8A/H1	M	4B1	M	4B1	12
11	EBM	17B8	B	2A8	EBM	17A8	B	2A9	M	10H1	M	10H2	M	9D2	M	9C2	M	8A/D1	M	8A/D1	M	4D1	M	4E1	11
10	EBM		BM	18B7	EBM		BM	18C7	M	10G3	M	10G3	M	19C3	M	19D3	M	7H7	M	7H7	M	4G1	M	4G1	10
9	EBM	18C6	B	2C8	EBM	18C7	B	2C9	M	10G5	M	10G5	M	19C3	M	19C3	M	7D7	M	7D7	M	4B4	M	4B4	9
8	EBM	18D6	BM	36 B2	EBM	18D7	BM	17A8	BM	31C1	BM	31E8	EBM	4C7	EBM	4C7	BM	31D1	BM	31G8	BM	31A1	BM	31A1	8
7	EBM		B	29F1	EBM		B	29G1	M	36H3	M	36 H3	B	4A7	B	4A7	M	7H2	M	7H2	M	4D4	M	4E4	7
6	EBM	18D6	BM	17B2	EBM	18E7	BM	17D3	BM	31C1	BM	31F9	EMB	19B3	EMB	19B3	BM	31C1	BM	31E9	BM	31D1	BM	31G9	6
5	EBM	18E7	B		EBM	18E7	B	17A7	M	36 E2	M	36 A2	M	19A3	M	19B3	M	7D2	M	7D2	M	4F3	M	4E3	5
4	EBM	34F2	BM	17A3	EBM	34F3	BM	17C3	M	36B3	M	36 D3	EBM	31C1	EBM	31F8	M	6H7	M	6H7	M	4C3	M	4B3	4
3	EBM	29F1	B	2C7	EBM	29F1	B	2C7	M		M		M		M		M	6D7	M	6D7	M	4H0	M	4G0	3
2	EBM	17B7	M	29F1	EBM	17A7	M	29F1	M	17H0	M	17H2	M	9D1	M	9C1	M	6G2	M	6G2	M	4F0	M	4E0	2
1	EBM	17B7	B	2A7	EBM	17D6	B	2A7	M	17H0	M	17H2	M	9B1	M	9B1	M	6D2	M	6D2	M	4C0	M	4C0	1
COIL		17A7		17A7		17D7		17C7		5A/A1		5A/E1		5A/B1		5A/F1		5A/C1		5A/F1		5A/C1		5A/G1	COIL

DESIG	RCE0		RCE1		RGA		RGAA		RGB		RGBA		RHKA		RHKB										DESIG
CODE	AF132		AF132		AF132		AF132		AF132		AF132		AF114		AF114										CODE
OPTION																									OPTION
	CONT ARR	LOC	CONT ARR	LOC	CONT ARR	LOC	CONT ARR	LOC	CONT ARR	LOC	CONT ARR	LOC	CONT ARR	LOC	CONT ARR	LOC	CONT ARR	LOC	CONT ARR	LOC	CONT ARR	LOC	CONT ARR	LOC	
12	M	4G4	M	4G4	M	2A2	M		M	2A2	M														12
11	M	5B/B4	M	5B/C4	M	18B6	M		M	18C6	M														11
10	M	5B/D4	M	5B/E4	M	18C6	M		M	18C6	M		M	15B6	M	15D6									10
9	M	5A/A6	M	5A/A6	M	18D6	M	36 B1	M	18D6	M	36 B1													9
8	BM	5A/B5	BM	5A/B5	BM	29B1	BM	15A6	BM	29B1	BM	15C6	BM		BM										8
7	M		M		M	17B2	M		M	17C2	M														7
6	BM	31E1	BM	31E1	BM	29C1	BM	29C1	BM	29C1	BM	29C1	BM	26B3	BM	26D3									6
5	M	31E6	M	31E6	M	18E6	M	34G0	M	18E6	M	34G0													5
4	M	5A/A5	M		M	18D6	M	34F0	M	18E6	M	34F0	M		M										4
3	M	5B/D1	M	5B/E1	M	17A2	M		M	17B2	M														3
2	M	5B/B1	M	5B/B1	M	a	M	24C1	M	a	M	24C1	B	26A2	B	26C2									2
1	M	4H3	M	4G3	M	26B3	M	24B1	M	26D3	M	24B1													1
COIL		5A/D1		5A/G1		17E7		17F7		17G7		17H7		17A1		17B1									COIL

a ⑨ 2288 ㉒ 40A8

a ⑨ 2285 ㉒ 4088

NETWORK

DESIG	LOC	CODE
RA0A	17B7	186A
RA1A	17D7	186A
RCA0	5A/A1	186A
RCA1	5A/E1	186A
RGA	17F7	186A
RGB	17G7	186A

DESIG																									DESIG
CODE																									CODE
OPTION																									OPTION
	CONT ARR	LOC	CONT ARR	LOC	CONT ARR	LOC	CONT ARR	LOC	CONT ARR	LOC	CONT ARR	LOC	CONT ARR	LOC	CONT ARR	LOC	CONT ARR	LOC	CONT ARR	LOC	CONT ARR	LOC	CONT ARR	LOC	
12																									12
11																									11
10																									10
9																									9
8																									8
7																									7
6																									6
5																									5
4																									4
3																									3
2																									2
1																									1
COIL																									COIL

DESIG																									DESIG
CODE																									CODE
OPTION																									OPTION
	CONT ARR	LOC	CONT ARR	LOC	CONT ARR	LOC	CONT ARR	LOC	CONT ARR	LOC	CONT ARR	LOC	CONT ARR	LOC	CONT ARR	LOC	CONT ARR	LOC	CONT ARR	LOC	CONT ARR	LOC	CONT ARR	LOC	
12																									12
11																									11
10																									10
9																									9
8																									8
7																									7
6																									6
5																									5
4																									4
3																									3
2																									2
1																									1
COIL																									COIL

DRAWING ISSUE

1	ASC NLB	WKS
2B	PKS KGJ	MKZ
9B	VZ MS	PDI
12B	PTN WAN	PO A
6B	JVP JVP PDB	
19B	EG WVP PA	HO
30D	VCW PJS GPH	
35D	FED PJS RMP	
37B	ROZ PJS LAU	
45D		

LINE, LINK, AND MARKER CIRCUIT (2)

BELL TELEPHONE LABORATORIES, INC

DWG SIZE 6S

ISSUE 46D

SD-65741-01-C4

PRINTED IN U.S.A.

APP FIG. 6

RELAY

DESIG	TK0		TK9				TKA0		TKA9		TKB0		TKB9				TRC0		TRC1		TRM0		TRM1		DESIG
CODE	AF132		AF132				AF132		AF132		AF132		AF132				AF132		AF132		AF132		AF132		CODE
OPTION																									OPTION
	CONT ARR	LOC	CONT ARR	LOC	CONT ARR	LOC	CONT ARR	LOC	CONT ARR	LOC	CONT ARR	LOC	CONT ARR	LOC	CONT ARR	LOC	CONT ARR	LOC	CONT ARR	LOC	CONT ARR	LOC	CONT ARR	LOC	
12	M	5A/B2	M	11G8			M		M	8A/G0	M	a	M	a			M	18E6	M	18H3	M		M	11G8	12
11	M		M	11G6			M		M	8A/D1	M	b	M	b			M		M	18C3	M		M	11G6	11
10	M	11G4	M	11G4			M	7G7	M	7H5	M		M	5A/C2			M		M	18G3	M	19G2	M	11G4	10
9	M	11G2	M	11G2			M	7D7	M	7D5	M		M	36C0			M		M	18F3	M	11G2	M	11G2	9
8	BM	19D5	BM	19D5			BM	19E5	BM	19E5	BM	31F7	BM	31E7			BM	31D8	BM	31C8	BM		BM	31G7	8
7	M	11G0	M	11G0			M	7G2	M	7H0	M	c	M	c			M		M	18F3	M	11G0	M	11G0	7
6	BM	31A8	BM	31B8			BM	31A9	BM	31B9	BM	31F7	BM	31E7			BM	24B1	BM	24B1	BM	31F7	BM	31F6	6
5	M		M	10G7			M	19B4	M	7D1	M	5A/F2	M	5A/G2			M	18E3	M		M	10C8	M		5
4	M		M	10G6			M	19B4	M	6G5	M	34H0	M	34H0			M	18D3	M		M	10G6	M		4
3	M	10G4	M	10G4			M	6E5	M	6D5	M	34E0	M	34D0			M	18D3	M		M	10G4	M		3
2	M	10G2	M	10G2			M	6H2	M	6G0	M	24H1	M	24H1			M	18C3	M		M	10G2	M		2
1	M	10G0	M	10G0			M	6E2	M	6E1	M	24A1	M	24A1			M	18B3	M	18E6	M	10G0	M	10G1	1
COIL		5A/A8		5B/D3				5A/B6		5B/E3		5A/B6		5B/E3				4E8		4H8		4D8		4F8	COIL

a	(9) 22D6	(22) 40F5
b	(9) 22E6	(22) 40H5
c	(WC) 21E1	(22) 39G5

a	(9) 22D6	(22) 40F5
b	(9) 22E6	(22) 40H5
c	(WC) 21E1	(22) 39G4

NETWORK

DESIG	LOC	CODE
TK0	5A/A6	186A
TK9	5B/E3	186A
TRM0	4D8	186A
TRM1	4F8	186A

RESISTOR

DESIG	LOC	CODE
(YN) TKA9	5B/F3	KS-14603,L1A,1000

RELAY

DESIG	TRU0		TRU1																						DESIG
CODE	AF132		AF132																						CODE
OPTION																									OPTION
	CONT ARR	LOC	CONT ARR	LOC	CONT ARR	LOC	CONT ARR	LOC	CONT ARR	LOC	CONT ARR	LOC	CONT ARR	LOC	CONT ARR	LOC	CONT ARR	LOC	CONT ARR	LOC	CONT ARR	LOC	CONT ARR	LOC	
12	M		M	8A/E3																					12
11	M		M	8A/B3																					11
10	M		M	7F8																					10
9	M	7A8	M	7B8																					9
8	BM	31D9	BM	31C9																					8
7	M	7E3	M	7F3																					7
6	BM	24H1	BM	24H1																					6
5	M	7B3	M																						5
4	M	6F8	M																						4
3	M	6B8	M																						3
2	M	6F3	M																						2
1	M	6B3	M	6A3																					1
COIL		4D8		4G8																					COIL

PART OF APP FIG. 7

RELAY

DESIG	ACA		ACB		BSYA		BSYAA		BSYB		BSYBA		BYA		BYB		HCA		HCB		HMKA		HMKB		DESIG
CODE	AJ54		AJ54		AJ54		AJ54		AJ54		AJ54		AF64		AF64		AF132		AF132		AF88		AF88		CODE
OPTION																									OPTION
	CONT ARR	LOC	CONT ARR	LOC	CONT ARR	LOC	CONT ARR	LOC	CONT ARR	LOC	CONT ARR	LOC	CONT ARR	LOC	CONT ARR	LOC	CONT ARR	LOC	CONT ARR	LOC	CONT ARR	LOC	CONT ARR	LOC	
12	EM		EM		EM	12D2	EM	12E3	EM	12F3	EM	12E3	EMB	15D8	EMB	15D8	M	8A/G1	M	8A/H1	M	15A8	M	15C8	12
11	M		M		M	15B3	M	12E2	M	15A3	M	12E2	M	17G4	M	17H4	M	8A/D1	M	8A/D1	B	14E3	B	14A3	11
10	EBM	17A6	EBM	17A6	EBM	15A3	EBM		EBM	15A3	EBM		M	12D3	M	12E3	M	7G6	M	7H6	M	14C3	M	14F3	10
9	B		B		B	98D2	B		B	9C2	B		BM	15H1	BM	15H5	M	7D6	M	7D6	B	16F2	B	16C2	9
8	EBM	29D4	EBM	29D4	EBM		EBM	29F5	EBM		EBM	29F4	M	98D3	M	9C3	BM	29E7	BM	29E6	BM	16C6	BM	16F6	8
7	B		B		B	15A7	B		B	15C7	B		BM	a	BM	a	M	7G1	M	7G1	B	26A4	B	26C4	7
6	EMB	15D6	EMB	15B6	EMB	29D4	EMB		EMB	29D4	EMB		EMB	12B2	EMB	12F2	BM	12D2	BM	12E2	BM	30F6	BM	30F5	6
5	B	26D5	B	26B5	B	9C0	B		B	98D0	B		BM	b	BM	b	M	7D1	M	7D1	B	16C2	B	16F2	5
4	EBM	26B5	EBM	26D5	EBM	26D4	EBM		EBM	26B4	EBM		M	12D2	M	12F3	M	6G6	M	6H6	M	16C3	M	16F3	4
3	B		B		B	98D	B		B	9C0	B		BM	29F5	BM	29F4	M	6D6	M	6D6	B	26B5	B	26D5	3
2	M	15B6	M	15D6	M	15A1	M	12C3	M	15B1	M	12D3	M	98D1	M	9C1	M	6G1	M	6H1	M	14C0	M	14F0	2
1	M	17D7	M	17D8	M	15B1	M	12C2	M	15A1	M	12D2	M	37C3	M	37C4	M	6D1	M	6D1	B	14A0	B	14E0	1
COIL		8A/A7		8A/B7		12D3		12C3		12E3		12E3		12B3		12F2		98I		9C1		9B4		9C4	COIL

a	34C1	26B5
(VL) 15F1		
b		
(VM) 15F0		17F4

a	34D1	26E5
(VL) 15G0		
b		
(VM) 15H0		17G4

LAMP

DESIG	LOC	CODE
CS	18A0	11B

NETWORK

DESIG	LOC	CODE
ACA	8A/A7	185A
ACB	8A/B7	185A
RCTA	14C6	186A
RCTB	14B6	186A
SEA	12B6	186A
SEB	12F6	186A
TACA	4B8	186A
TACB	4C8	186A
TRCA	14A2	186A
TRCB	14E2	186A
TRKA	14C2	186A
TRKB	14G2	186A
ULA	8A/G5	186A
ULB	8A/H5	186A

RELAY

DESIG	JR0		JR1		JR2		JR3		JR4		JR5		JREA		JREB		JTA		JTAA		JTB		JTBA		DESIG
CODE	AF132		AF132		AF132		AF132		AF132		AF132		AJ12		AJ12		AF132		AJ28		AF132		AJ28		CODE
OPTION																									OPTION
	CONT ARR	LOC	CONT ARR	LOC	CONT ARR	LOC	CONT ARR	LOC	CONT ARR	LOC	CONT ARR	LOC	CONT ARR	LOC	CONT ARR	LOC	CONT ARR	LOC	CONT ARR	LOC	CONT ARR	LOC	CONT ARR	LOC	
12	M	13B2	M	13C2	M	13D2	M	13E2	M	13F2	M	13G2	EBM	14C2	EBM	14F3	M	13B1	EM	34E0	M	13E1	EM	34E0	12
11	M	13B8	M	13B8	M	13B8	M	13B8	M	13B8	M	13B8	EBM	29A8	EBM	29A8	M	13C1	M	a	M	13G1	M	a	11
10	M	13B8	M	13B8	M	13B8	M	13B8	M	13B8	M	13B8	EBM	b	EBM	b	M	13D2	EBM	9B5	M	13G2	EBM	9D5	10
9	M	24C1	M	24C1	M	24C1	M	24G1	M	24G1	M	24C1	EBM	14A7	EBM	14B7	M	10G0	M	98I	M	11F0	M	9D2	9
8	BM		BM	29A4	BM	29A5	BM	29A5	BM	29A6	BM	29A6	EBM	29C7	EBM	29C6	BM	10F2	EBM	29D1	BM	11F2	EBM	29D1	8
7	M	9H5	M	9H5	M	9H5	M	9H5	M	9H5	M	9H5	EBM	23F7	EBM	23F6	M	10F4			M	11F4			7
6	BM	29A4	BM	29A4	BM	29A4	BM	29A5	BM	29A6	BM	29A6	EBM	a	EBM	a	BM	6C6	EMB	34D4	BM	7G6	EMB	34D4	6
5	M	9F5	M	9F5	M	9F5	M	9F5	M	9F5	M	9F5	EBM	23G7	EBM	23G6	M	14H5	M	b	M	14H8	M	b	5
4	M	9E5	M	9E5	M	9E5	M	9E5	M	9E5	M	9E5	EBM	14C7	EBM	14E7	M	6G1	EBM	29A8	M	7D6	EBM	29A8	4
3	M	13B7	M	13B7	M	13B7	M	13B7	M	13B7	M	13B7	EBM	17E1	EBM	17G1	M	6D1	M	98I	M	7G1	M	9D1	3
2	M	13B7	M	13B7	M	13B7	M	13B7	M	13B7	M	13B7	EBM	17G0	EBM	17E0	M	13B0	EBM	12A2	M	14H8	EBM	12H2	2
1	M	13B1	M	13C1	M	13D1	M	13E1	M	13G1	M	13H1	EBM	14C1	EBM	14F1	M	14H4	M	10G0	M	14H7	M	11F0	1
COIL		13A1		13C1		13D1		13E1		13F1		13G1		13A8		13B8		14A6		14H5		14B6		14G7	COIL

a	2603	1485
b	1588	
(9)	22A8	
(22)	40A8	

a	2683	14A5
b	15D8	
(9)	22A5	
(22)	40B8	

(WW) 15F3		
a		
(WX) 12H2		
(VL) 15F0		
b		
(VM) 15F1		

(WW) 15H3		
a		
(WX) 12A2		
(VL) 15G0		
b		
(VM) 15H0		

DRAWING ISSUE

1	B#W N.P.
2B	PKT F&C
4A	AST Cir#
5D	A.S. Cir#
9B	VZ N.S.
12B	PTR WM
20AC	EWB W/M P#
23D	ZEN DAC ARM
29B	WPA GEH
30D	MAB RJS GEH
33D	FED RJS AHP
36B	RDZ RJS JDJ
39B	RDZ RJS JDJ
4	P

ISSUE 46D

LINE, LINK, AND MARKER CIRCUIT

SD-65741-01-C5

BELL TELEPHONE LABORATORIES, INC.

6S

SD-65741-01-C5

PART OF APP FIG. 7

RELAY

DESIG	LUCA		LUCB		RCTA		RCTB		RCTAA		SEAA		RCTBA		SEBA		RUCA		RUCB		S0		S1		DESIG
CODE	AF132		AF132		AF24		AF24		AK6				AK6				AF132		AF132		AJ55		AJ55		CODE
OPTION																									OPTION
	CONT ARR	LOC	CONT ARR	LOC	CONT ARR	LOC	CONT ARR	LOC	CONT ARR	LOC	CONT ARR	LOC	CONT ARR	LOC	CONT ARR	LOC	CONT ARR	LOC	CONT ARR	LOC	CONT ARR	LOC	CONT ARR	LOC	
12	M	29G6	BM	14B2	M	14C3	M	14C2	M	14G3	BM	14G2	M	10C0	M	16F7	M	8A/G1	M	8A/F1	M	10B0	M	10B2	12
11	M	15H7	M	17F1	M	14C3	M	14F2			BM	14D7			BM	29A3	M	8A/C1	M	8A/C1	M	10C0	M	10C2	11
10	M	7F7	M	7G7	M	5A/A2	M	5A/B2			BM	16C7			BM	14C7	M	7G7	M	7F6	BM	18B1	BM	18C1	10
9	M	787	M	7C7	M	5A/F2	M	5A/E2			BM	29D7			BM	29D6	M	7C7	M	786					9
8	BM	30E6	BM	30E5	M	a	M	a			BM	29A3			BM	14D7	BM	29D7	BM	29D6	BM	10E1	BM	10E3	8
7	M	7F2	M	7G2	M	17G1	M	17G1									M	7G2	M	7F1					7
6	BM	8A/A6	BM	8A/C6	M	17E1	M	17F1									BM		BM		BM	1882	BM	1882	6
5	M	7B2	M	7C2	M	12H2	M	12H2	BM	23F6			BM	23G6			M	7C2	M	7B1					5
4	M	6F7	M	6G7	M	12B2	M	12B2	BM	15A8			BM	15C8			M	6G7	M	6F6	BM	10D1	BM	10D3	4
3	M	687	M	6C7	M	5A/E1	M	5A/F1	BM				BM				M	6C7	M	6B6	M	12D7	M	12D7	3
2	M	6F2	M	6G2	M	5A/A1	M	5A/B1	BM	29E1			BM	29E1			M	6G2	M	6F1	M	12E7	M	12E7	2
1	M	681	M	6C2	M	14C0	M	14F0	BM	26D4			BM	26B3			M	6C2	M	6B1	M	10C1	M	10C3	1
COIL		8A/F5		8A/H5		14C6		14D6		14C6		12E6		14E6		12F6		8A/D5		8A/E5		10C0		10C2	COIL

a (9) 22A8 (22) 40A8 — a (9) 22A5 (22) 40B8

DIODE

DESIG	LOC	CODE
(XH,WT) [10] S(0-9)	10C- 11C-	446F

RELAY

DESIG	S2		S3		S4		S5		S6		S7		S8		S9		SEA		SEB		TRCA		TRCAA		DESIG
CODE	AJ55		AJ55		AJ55		AJ55		AJ55		AJ55		AJ55		AJ55		AF64		AF64		AJ15		AF64		CODE
OPTION																									OPTION
	CONT ARR	LOC	CONT ARR	LOC	CONT ARR	LOC	CONT ARR	LOC	CONT ARR	LOC	CONT ARR	LOC	CONT ARR	LOC	CONT ARR	LOC	CONT ARR	LOC	CONT ARR	LOC	CONT ARR	LOC	CONT ARR	LOC	
12	M	10B4	M	10B6	M	10B8	M	11B0	M	11B2	M	11B4	M	11B6	M	11B8	EMB	14D3	EMB	14H3	EBM	29G7	EMB	14F2	12
11	M	10C4	M	10C6	M	10C8	M	11C0	M	11C2	M	11C4	M	11C6	M	11C8	M	15C4	M	15D4	EBM	14B3	M	17F1	11
10	BM	18C1	BM	18D1	BM	18E1	BM	18E1	BM	18F1	BM	18G1	BM	18G1	BM	18H1	M	18A1	M	18A1	EBM	15D4	M	8A/A6	10
9																	BM	8A/E5	BM	8A/D6	EBM	15H3	BM	16G5	9
8	BM	10E4	BM	10E6	BM	10E8	BM	11E1	BM	11E3	BM	11E4	BM	11E6	BM	11E8	M	18A2	M	18A1	EMB	14A2	M		8
7																	BM	8A/D5	BM	8A/E6	EBM	14C6	BM	b	7
6	BM	18C2	BM	18D2	BM	18D2	BM	18E2	BM	18F2	BM	18F2	BM	18G2	BM	18H2	EMB	12D4	EMB	12F4	EMB	9H6	EMB	29J6	6
5																	BM	b	BM	b	EMB	14A1	BM	a	5
4	BM	10D4	BM	10D6	BM	10D8	BM	11D1	BM	11D3	BM	11D4	BM	11D6	BM	11D8	M	15C0	M	15D0	EBM	a	M	23F6	4
3	M	12D7	M	12D7	M	12D7	M	12D7	M	12D7	M	12D7	M	12D7	M	12D7	BM	14D0	BM	14H0	EBM	15H0	BM	14F1	3
2	M	12E7	M	12E7	M	12E7	M	12E7	M	12E7	M	12E7	M	12E7	M	12E7	M	9C8	M	9D8	EBM	b	M	17D1	2
1	M	10C4	M	10C6	M	10C8	M	11C1	M	11C3	M	11C4	M	11C6	M	11C8	M	a	M	a	EBM	14B0	M	9E6	1
COIL		10C4		10C6		10C7		11C0		11C2		11C4		11C6		11C7		12D6		12E6		14A2		14B2	COIL

(WW) 15G1 — a (WX) 15G3

(WW) 15E1 — b (WX) 15E3

(WW) 15G1 — a (WX) 15F3

(WW) 15F1 — b (WX) 15H3

a (VQ) 15D0 14D5 — a (VQ) 16D3 7E1

(VR) 15D0 — b (VR) 26AD — (VQ) 26A1

b (VQ) 25A/G0 — (VR) 25B/B5

RELAY

DESIG	TRCB		TRCBA		TRKA		TRKAA		TRKM		TRKBA		U0		U1		U2		U3		U4		U5		DESIG
CODE	AJ15		AF64		AF88		AJ12		AF88		AJ12		AK2				AK2				AK2				CODE
OPTION																									OPTION
	CONT ARR	LOC	CONT ARR	LOC	CONT ARR	LOC	CONT ARR	LOC	CONT ARR	LOC	CONT ARR	LOC	CONT ARR	LOC	CONT ARR	LOC	CONT ARR	LOC	CONT ARR	LOC	CONT ARR	LOC	CONT ARR	LOC	
12	EBM	29G6	M	14B2	M	14C3	EBM	14C2	M	14G3	EBM	14G2	M	10C0			M	10C4			M	10C8			12
11	EBM	15H7	M	17F1	B	5A/C6	EBM	15A7	B	5A/C7	EBM	15C7	M	10B8			M	1084			M	10B8			11
10	EBM	15E4	M	8A/C6	M	14A3	EBM	25A/H6	M	14E3	EBM	25A/H1	M	681			M	686			M	7B1			10
9	EBM	14F3	BM	16D5	B	9E6	EBM	15H2	B	9E6	EBM	15C3	M	8A/D7			M	8A/D7			M	8A/D7			9
8	EMB	14E2	M	5A/C7	BM	29F7	EBM	25A/G1	BM	29F6	EBM	25A/G6	M	8A/F7			M	8A/F7			M	8A/F7			8
7	EBM	b	BM	b	B	9E6	EBM	23G4	B	15H6	EBM	15D3													7
6	EMB	9G6	EMB	29G7	BM	29E7	EBM	29E6	BM	29F7	EBM	29F6													6
5	EMB	14E1	BM	a	B	986	EBM	a	B	9D6	EBM	a			M	10C2			N	10C6			M	11C0	5
4	EBM	a	M	23H6	M	14A0	EBM	9G6	M	14E0	EBM	9G6			M	10B2			M	10B6			M	11A0	4
3	EBM	14F0	BM	14B1	B	b	EBM	b	B	9E6	EBM	23F4			M	6F1			M	6F6			M	7F1	3
2	EBM	14D6	M	17E1	M	14C0	EBM	14C1	M	14G0	EBM	14G1			M	8A/E7			N	8A/E7			M	8A/E7	2
1	EBM	15H5	M	9E6	B	a	EBM	15H1	B	15H5	EBM	b			M	8A/G7			M	8A/G7			M	8A/G7	1
COIL		14E2		14E2		14C2		14B2		14F2		14F2		6B1		6E1		686		6E6		7B1		7E1	COIL

(VS) 15E0 14C5 — a (VS) 17E1 16G3

(VR) 15E0 — b (VR) 26D0 — (VQ) 26C1

(VR) 25A/G5 — b (VR) 25B/C5

a (VV) 15C1 — (VW) 15C3

(VV) 15D1 — b (VW) 15D3

a 23F0 25A/H5 — b (VQ) 25A/H0 — (VR) 25B/C5

a 23G0 — (VQ) 25A/H0 — (VQ) 25A/H5 — b (VR) 25B/C6

RELAY

DESIG	U6		U7		U8		U9		UEA		UEB		ULA		ULB		TACA		TACAA		TACB		TACBA		DESIG
CODE	AK2				AK2				AF55		AF55		AF132		AF132		AF24		AF55		AF24		AF55		CODE
OPTION																									OPTION
	CONT ARR	LOC	CONT ARR	LOC	CONT ARR	LOC	CONT ARR	LOC	CONT ARR	LOC	CONT ARR	LOC	CONT ARR	LOC	CONT ARR	LOC	CONT ARR	LOC	CONT ARR	LOC	CONT ARR	LOC	CONT ARR	LOC	
12	M	11C2			M	11C6			M	14C3	M	14G3	M	8A/F0	M	8A/F1	M	8A/F6	M	17B8	M	8A/G6	M	17B8	12
11	M	11A2			M	11A6			M		M		M	8A/C0	M	8A/C1	M	8A/H6	M	17D8	M	8A/H6	M	17D8	11
10	M	786			M	8A/B1			BM	12E4	BM	12E4	M	7F5	M	7F6	M	8A/D9	BM	a	M	8A/D9	BM	b	10
9	M	8A/D7			M	8A/D7			M	12G2	M	12G2	M	785	M	786	M	8A/F9	M	25A/E9	M	8A/F9	M	a	9
8	M	8A/F7			M	8A/F7			BM	8A/F5	BM	8A/F6	BM	29C7	BM	29C6	M	8A/A8	BM	31B1	M	8A/A8	BM	31B1	8
7									B	1380	B	1380	M	7F0	M	7F1	M	8A/C7	B	29E2	M	8A/C7	B	29F2	7
6									BM	8A/H5	BM	8A/H6	BM		BM		M	8A/C6	BM	25A/E5	M	8A/C6	BM	25A/E5	6
5			M	11C4			M	11C8	M	14C0	M	14G0	M	780	M	781	M	8A/A5	M	17G7	M	8A/A5	M	17H7	5
4			M	11A4			M	11A8	BM	29B7	BM	29B6	M	6F5	M	6F6	M	25A/E0	BM	12B4	M	25A/E0	BM	12C4	4
3			M	7F6			M	8A/F1	M	12C2	M	12B2	M	685	M	686	M	29E2	M	17E7	M	29F2	M	17F7	3
2			M	8A/E7			M	8A/E7	M	988	M	9D8	M	6F0	M	6F1	M	8A/H4	M	17D7	M	8A/H4	M	17D6	2
1			M	8A/G7			M	8A/G7	M	12D4	M	12E4	M	680	M	681	M	8A/F4	M	17B7	M	8A/G4	M	17B6	1
COIL		7B6		7E6		8A/B0		8A/E0		8A/D8		8A/F8		8A/G5		8A/H5		4A8		48B		4C8		4C8	COIL

25A/E4 — (YL) 25A/H2

(YK) 25A/E9 — a (YL/VS) 25A/E4 — (YK) 25A/E4 — (YL/VS) 25A/E9 — (YL) 25A/H7

DESIG	RPA0	RPA1	
CODE	AJ202	AJ202	
OPTION			
24	8A/E9	8A/E9	
23	8A/G9	8A/G9	
22	14A8	14B8	
21	14B8	14B8	
20	14C8	14C8	
19	14D8	14E8	
18	15F6	15G6	
17	15F6	15G6	
16	d	d	
15	c	c	
14	8A/D6	8A/D6	
13	8A/E6	8A/E6	
12	8A/E4	8A/E4	
11	8A/D4	8A/D4	
10	19E0	19E0	
9	19D0	19D0	
8	b	b	
7	a	a	
6	17H5	17F5	
5	17G5	17E5	
4	17G5	17E5	
3	17F5	17E5	
2	14F0	14F0	
1	14B0	14B0	
COIL	5A/H6	5A/H6	

a (A,VR) 16B2 — (B) 25A/D0

b (A,VR) 16E2 — (B) 25A/D5

c (A,VR) 16E6 — (B) 25A/D8

d (A,VR) 1696 — (B) 25A/D3

DRAWING ISSUE

1	8HG M,R
2B	7C FGJ
4A	A,D GHP FGJ
8B	FGJ
12B	PTS WM
19B	PHQ WHP FJ
24D	WHP SAK KTJ
28D	FJS SAK GFH
33D	FFD FJS RHP
36B	RDZ FJS LDJ
39B	RDZ FJS LDJ
41B	
43B	

LINE, LINK, AND MARKER CIRCUIT (2) SD-65741-01-C6

BELL TELEPHONE LABORATORIES, INC — DWG SIZE 6S — PRINTED IN U.S.A.

ISSUE 48B

SD-65741-01-C6

APP FIG. 8

RELAY

DESIG	BTCA		BTCB		BTTA		BTTB		COA		COB		CONA		CONAA		CONB		CONBA		COTA		COTB		DESIG
CODE	AF55		AF55		AJ12		AJ12		AJ12		AJ12		AF132		AJ15 WT		AF132		AJ15 WT		AF55		AF55		CODE
OPTION																									OPTION
	CONT ARR	LOC	CONT ARR	LOC	CONT ARR	LOC	CONT ARR	LOC	CONT ARR	LOC	CONT ARR	LOC	CONT ARR	LOC	CONT ARR	LOC	CONT ARR	LOC	CONT ARR	LOC	CONT ARR	LOC	CONT ARR	LOC	
12	M	15B8	M	15D8	EBM	14A3	EBM	14E3	EBM	b	EBM	b	M	15B3	EBM	39E7	M	15B3	EBM	39E7	M	16B6	M	16E6	12
11	M	10G1	M	10G1	EBM	16C5	EBM	16F5	EBM	23B5	EBM	23G5	M	15F3	EBM	39B7	M	15G3	EBM	39B7	M	35C3	M	35C3	11
10	BM	d	BM	d	EBM	19E4	EBM	19F4	EBM	23F5	EBM	23G5	M	b	EBM	39E2	M	b	EBM	39E2	GM	16C5	BM	16F5	10
9	M	12B3	M	12G3	EBM	13B2	EBM	13B3	EBM	a	EBM	a	M	14B3	EBM	39B2	M	14E3	EBM	39B2	M		M		9
8	BM	30F6	BM	30F5	EBM	b	EBM	b	EBM	32E2	EBM	32E2	BM	32C5	EMB	40F4	BM	32C5	EMB	40H4	BM	a	BM	a	8
7	B	c	B	c	EBM	13E2	EBM	13E3	EBM	9F8	EBM	9E8	M	14B0	EBM	32F5	M	14E0	EBM	32G5	B	16F4	B	16C4	7
6	BM	g	BM	a	EBM	29E1	EBM	29E1	EBM	9E8	EBM	9E8	BM	32F5	EMB	32B0	BM	32C5	EMB	32B0	BM	29G1	BM	29G1	6
5	M	37E3	M	37E4	EBM	14B5	EBM	14A6	EBM	17F2	EBM	17F2	M	a	EMB		M	a	EMB		M	16H2	M	16H2	5
4	BM	17G4	BM	17H4	EBM	a	EBM	a	EBM	32C5	EBM	32C5	M	15F1	EBM	38D7	M	15G0	EBM	38D7	BM	16C3	BM	16F3	4
3	M	34C4	M	34C4	EBM	14A5	EBM	14B6	EBM	17E2	EBM	17E2	M	15B1	EBM	38B7	M	15B1	EBM	38B8	M	9B5	M	9D5	3
2	M	b	M	b	EBM	16C3	EBM	16F3	EBM	19F4	EBM	19G4	M	9D7	EBM	38D2	M	9D8	EBM	38D2	M	19G4	M	19H4	2
1	M	34C0	M	34C0	EBM	14A0	EBM	14E0	EBM	15A1	EBM	15B1	M	9B7	EBM	38B2	M	9B8	EBM	38B2	M	16B3	M	16E3	1
COIL		15H2		15H6		16F4		16F4		16B4		16B4		16A4		16E4		16E4		15F6		15G6	COIL

a: 26C5, 24B0 — b: 15H1 — c: 26H7, 26G8 — d: 26F7, 6C1

a: 26E5, 24C0 — b: 6C1, 15G5 — c: 26F7, 26F8 — d: 26G8, 26H6, 6C1

a: 15A0, 15H0 — b: 15A4, 15H3

a: 15B0, 15H4 — b: 15B4, 15H7

a: 9 22A0, 22 40A0 — b: WT 19G4, WT 16C4

a: 9 22C0, 22 40D0 — b: WT 19F4, WT 16G4

a: 9 22H1, 22 40D0 — b: 9 22H5, 22 40D2

a: 9 22H5, 22 40E5 — b: 9 22H7, 22 40E2

a: 9 22D5, 22 40F3

a: 9 22E5, 22 40H3

DIODES

	DESIG	LOC	CODE
XA	CC1	16C4	446F
XA	CC2	16F4	446F
WT	CO1	9C7	446F
	CO2	9C8	446F
	CO3	9D7	446F
	CO4	9D8	446F
WT	DI	38B3	446F
	D2	39B3	446F
	HA	2B7	XV 446F, UI 426F
	HB	2C7	XV 446F, UI 426F
XV,UI	HE	2C7	446F
XV,UI	HO	2B7	446F

DIODES (CONT)

	DESIG	LOC	CODE
XH,WT	LTSA	20G1, 38D0	446F
	LTSB	21F0, 39E5	446F
WC,WT	LTSC	21E2, 39G5	446F
VW	RT1	15B1	446F
	RT2	15C1	446F
	RT3	15D1	446F
	RT4	15E1	446F

NETWORK

DESIG	LOC	CODE
RLA	15A6	186A
RLB	15D6	186A
SMRA	15E2	186A
SMRB	15G2	186A
SOA	15A2	186A
SOB	15B2	186A

RELAY

DESIG	DCKA		DCKB		HMTA		HMTAA		HMTB		HMTBA		ICTA		ICTB				RCKA		RCKB		RLA		DESIG
CODE	AF10		AF10		AJ62		AJ54		AJ62		AJ54		AF140		AF140				AF87		AF87		AF88		CODE
OPTION																									OPTION
	CONT ARR	LOC	CONT ARR	LOC	CONT ARR	LOC	CONT ARR	LOC	CONT ARR	LOC	CONT ARR	LOC	CONT ARR	LOC	CONT ARR	LOC	CONT ARR	LOC	CONT ARR	LOC	CONT ARR	LOC	CONT ARR	LOC	
12	EM	26A5	EM	26D5	M	14D3	EM	19E2	M	14G3	EM	19E2	EM	16D5	EM	16G5							M	2A9	12
11					M	9D6	M	15E2	M	9B6	M	15D2	BM	29F1	BM	29F1							B	a	11
10	M	26F4	M	26G4	EBM	17A1	EBM	15D3	EBM	17B1	EBM	15E3	M	14B3	M	14F3			EBM		EBM		M	2C9	10
9					EB	26A1	B	17H0	EB	26C1	B	17H2	B	13E3	B	13E3							B	b	9
8	EBM	37B0	EBM	37C0	EMB	17C2	EBM	29E4	EMB	17B2	EBM	29E4	M	5A/C8	M	5A/C8			EMB	2R4	EMB	2B5	BM	30C4	8
7	B	15A6	B	15C6	EB	9D5	B	19F6	EB	9B5	B	19F7	B	13B3	B	14B5							B		7
6	EMB	15A5	EMB	15C5	EMB	29E4	EMB	36C1	EMB	29E4	EMB	36C1	EM	16C2	EM	16F2			EMB	25A/E1	EMB	25A/E6	BM	30A3	6
5					B	36D1	B	19E6	B	36D1	B	19E7	B	14B6	B	13B3			EM		EM		B	25A/F6	5
4	M		M		EBM	9B6	EBM	b	EBM	9D6	EBM	c	M	6H2	M	6H2			EB	25A/E2	EB	25A/E7	M	2D7	4
3					EB	b	B	17H2	EB	b	B	17H0	B	14B5	B	14A6							B	25A/F1	3
2	M	26F1	M	26G1	M	a	M	c	M	a	M	b	M	5A/C5	M	5A/C5							M	2B7	2
1					M	37B2	M	a	M	37B2	M	a	M	14B0	M	14E0							B	19H4	1
COIL		26A5		26C5		15D2		15C2		15E2		15D1		16D4		16G4				26A7		26B7		15A6	COIL

a: VV 14D0, VW 15E2 — b: VV 17C1, VW 15C2

a: VV 15E1, VW 19D2 — b: VV 19D2, VW 15B2 — c: VV 15D1, VW 15D2

a: VV 14G0, VW 15C2 — b: VV 17B1, VW 15E2

a: VV 15C1, VW 19D2 — b: VV 15E1, VW 15B2 — c: VV 19D2, VW 15D2

a: YR 19D1, WM 19D3 — b: YR 19E1, WM 19E3

RELAY

DESIG	RLAA		RLAB		RLB		RLBA		RLBB		SMRA		SMRAA		SMRB		SMRBA		SOA		SOB		TS		DESIG
CODE	AJ5		AF88		AF88		AJ5		AF88		AF132		AF132		AF132		AF132		AF82		AF82		AF10		CODE
OPTION																									OPTION
	CONT ARR	LOC	CONT ARR	LOC	CONT ARR	LOC	CONT ARR	LOC	CONT ARR	LOC	CONT ARR	LOC	CONT ARR	LOC	CONT ARR	LOC	CONT ARR	LOC	CONT ARR	LOC	CONT ARR	LOC	CONT ARR	LOC	
12	EBM	31D4	M	2A6	M	2B9	EBM	31D4	M	2B6	M	11B9	M	11D8	M	11C9	M	11E8	EM	16C7	EM	16F7	EM		12
11	EBM	31F1	B	d	B	a	EBM	31F1	B	d	M	11B7	M	11D6	M	11C7	M	11E6	M	11A9	M	11A7			11
10	EBM	31G1	M	15B6	M	2C9	EBM	31F1	M	15D6	M	11B5	M	11D4	M	11C5	M	11E4	M	11A5	M	11B5	M	33G7	10
9	EBM	31G1	B	23G3	B	25A/F3	EBM	31G1	B	23F3	M	11B3	M	11D2	M	11C3	M	11E2	M	11A3	M	11B3			9
8	EBM	30B3	BM	30B3	BM	30C3	EBM	30B4	BM	30B4	BM	a	BM	16C2	BM	a	BM	16F2	EBM	9D7	EBM	9B7	EBM		8
7	EBM	b	B	b	B	25A/F8	EBM	b	B	b	M	11B1	M	11D0	M	11C1	M	11E0	M	11A1	M	11B1	B		7
6	EBM	30B3	BM	30B3	BM	30A4	EBM	30B5	BM	30B5	BM	29A1	BM	29A1	BM	29A1	BM	29A1	EMB	10B7	EMB	10B7	EMB		6
5	EBM	26D0	B	23F1	B	b	EBM	26A0	B	23G1	M	10B9	M	10D8	M	10C9	M	10E8	M	10B9	M	10B9			5
4	EBM	a	M	17F4	M	2C7	EBM	a	M	17G4	M	10B7	M	10D6	M	10C7	M	10E6	EBM	9B7	EBM	9D7	M	33G4	4
3	EBM	3H1	B	c	B		EBM	3H1	B	c	M	10B5	M	10D4	M	10C5	M	10E4	M	10B5	M	10R5			3
2	EBM	26A0	M	2A3	M	2B7	EBM	26C0	M	2B3	M	10B3	M	10D2	M	10C3	M	10E2	M	10B1	M	10B3	M	19D1	2
1	EBM	3F1	B	a	B	19H4	EBM	3F1	B	a	M	10B1	M	10D0	M	10C1	M	10E0	M	16C1	M	16F1			1
COIL		15B6		15B6		15C6		15D6		15E6		15E2		15F2		15G2		15H2		15A2		15B2		19D2	COIL

a: YB 12B3, YC 19F7 — b: YB 12F3, YC 19G7

a: YB 19F7, YC 12B3 — b: YB 19G7, YC 12F3 — c: 5 23A4, 22 38H1 — d: 9 23B5, 22 38H7

a: YR 19D1, WM 19D4 — b: YR 19E1, WM 19E3

a: YB 12F3, YC 19G7 — b: YB 12B3, YC 19F7

a: YB 19G7, YC 12F3 — b: YB 19F7, YC 12B3 — c: 9 23B4, 22 38H6 — d: 9 23A5, 22 38H3

a: VL 15F1, VM 15G0

a: VL 15H0, VM 15H0

RELAY

DESIG	TSDA		TSDB		TT		BTTC		CCC				CONAA		CONBA	
CODE	AJ12		AJ12		AJ19		AK7 XA						AF32 WS		AF32 WS	
OPTION																
	CONT ARR	LOC	CONT ARR	LOC	CONT ARR	LOC	CONT ARR	LOC	CONT ARR	LOC	CONT ARR	LOC	CONT ARR	LOC	CONT ARR	LOC
12	EBM		EBM						EBM	16C4			M	15C3	M	15D3
11	EBM	19D5	EBM	19D5					EBM	16F5			M	21D2	M	21B2
10	EBM	19D5	EBM	19D5					EBM	16B5			M	21A2	M	21A2
9	EBM	19D4	EBM	19D4					EM	16F3			M	20F6	M	20E6
8	EBM	19D4	EBM	19D4	M	18E5			EM	16B3			BM	22D5	BM	22E5
7	EBM	19D3	EBM	19D3	B								M	20C6	M	20D6
6	EBM	19D3	EBM	19D3	M								BM	32F5	BM	32G5
5	EBM	19D5	EBM	19D5	B		EM						M	20A6	M	20A5
4	EBM	19D6	EBM	19D5			EM						M	20F1	M	20F1
3	EBM	19D6	EBM	19D6			EBM						M	20C1	M	20D1
2	EBM	19D7	EBM	19D7			EBM	19D2					M	20A1	M	20A1
1	EBM	30F4	EBM	30F3			EBM	19E2					M	15C0	M	15D0
COIL		18E5		18F5		18B5		16C5		16D1				16B4		16E4

DESIG	COAA		COBA	
CODE	AJ202		AJ202	
OPTION	WS	WT	WS	WT
	LOC	LOC	LOC	LOC
24	15C4	15C4	15D4	15D4
23	21G3	38A0	21G3	38A0
22	21C8	38A5	21D8	38B5
21	21G8	39A0	21G8	39B0
20	22F2	39A5	22F2	39A5
19	23A6	38H3	23B6	38H3
18	23B6	38H8	23C6	38G8
17	23D5	32B0	23D5	32B0
16	22C5	40E4	22F6	40H4
15	16B6	16B6	16E6	16E6
14	32F1	32F1	32F1	32F1
13	22D7	40D6	22E7	40E6
12	20B7	38F6	21E2	39G6
11	20G2	38D6	21B3	39D6
10	20D2	38G1	20G7	39E1
9	20B2	38D1	20D7	39D1
8	9B6	9B6	9D6	9D6
7	24B1	24B1	24C1	24C1
6	24H1	24H1	24H1	24H1
5	16B3	16B3	16E3	16E3
4	2304	40G1	2304	40G1
3	2383	38H5	2303	38H5
2	2343	38H1	2383	38H1
1	15C0	15C0	15D0	15D0
COIL	16B4	16B4	16E4	16E4

DRAWING ISSUE	
1	BKG MJB
2B	RGA FGJ
3B	LCD PP
4A	JGF GMD
6A	RJH AAT
12B	PTL MN
16B	ADP PT FDB
22AC	JJB PAC PD
23D	ZBN DKC MM
25D	GAP SAK KFJ
26AC	SAK KFJ
26D	PJS SAK GFH
29B	APA GFH
30D	GJI PJS GFH
31D	HMC PJS RHP
33D	ROZ PJS RHP
34D	ROZ PJS RHP
35D	ROZ PJS RHP
36B	ROZ PJS LDJ
38D	ROZ PJS LDJ
39B	ROZ PJS LDJ
41B	
42B	
43B	

LINE, LINK, AND MARKER CIRCUIT

BELL TELEPHONE LABORATORIES, INC

ISSUE 50B

SD-65741-01-C7

APP FIG. 9 (MFR DISC)

RELAY

DESIG	ALBA		ALBB		COSA		COSB		LBA		LBB		LCK1		LCK2		LEA		LEAA		LEB		LEBA		DESIG
CODE	AJ54		AJ54		AG10		AG10		AJ27		AJ27		AK4				AF55		AJ12		AF55		AJ12		CODE
OPTION																									OPTION
	CONT ARR	LOC	CONT ARR	LOC	CONT ARR	LOC	CONT ARR	LOC	CONT ARR	LOC	CONT ARR	LOC	CONT ARR	LOC	CONT ARR	LOC	CONT ARR	LOC	CONT ARR	LOC	CONT ARR	LOC	CONT ARR	LOC	
12	EM	22E5	EM	22F5	M	19F6	M	19F6	EM	22C3	EM	a	M	32B3			M	23F5	EBM		M	23G5	EBM		12
11	M	16C4	M	16F4	M	19G6	M	19G6					EBM				M	23H5	EBM		M	23H5	EBM		11
10	EBM	15C4	EBM	15D4	M	22D5	M	22F5	M	e	M	e	EBM				BM	26A4	EBM	22A7	BM	26C4	EBM	22A4	10
9	B	30C3	B	30C3	B		B		B	23A3	B	23B3	EMB	24G3			M	22D5	EBM	32D5	M	22F5	EBM	32D5	9
8	EBM	32C6	EBM	32C7	M		M		EBM	b	EBM	b	EMB	24G4			BM	24F4	EBM	15E4	BM	24F3	EBM	16E5	8
7	B		B		B	32H6	B	32G5	B	22D7	B	22D7					B		EBM	16B4	B		EBM	16B5	7
6	EMB	8A6	EMB	8C6	M	32G5	M	32H5	EMB	c	EMB	c					BM	32E5	EBM	32E5	BM	32F5	EBM	32F5	6
5	B	9E7	B	9E7	B	19E6	B	19E5	B	22C7	B	22C7			EMB	24H4	M	24G5	EBM	24E6	M	24G5	EBM	24E5	5
4	EBM	34C1	EBM	34C1	M	19F5	M	19F5	EBM	d	EBM	d			EMB		BM		EBM	22A4	BM		EBM	22A7	4
3	B	9E7	B	9E7	B	19E5	B	19E6							EBM		M	24H5	EBM	24D6	M	24H5	EBM	24D5	3
2	M	16C4	M	16F4	M		M		M	22A1	M	22D1			EBM		M		EBM	24C6	M		EBM	24C5	2
1	M	15C0	M	15D0	M	19E5	M	19F5									M	32B3	M	21G1	EBM	24B6	M	21G1	EBM	24B5	1
COIL		22B2		22D2		22D4		22E4		22B2		22E2		24F3		24H3		23A4		23B4		23B4		23C4	COIL

a	(ZO) 22E3	
b (ZO) 23C2 (ZN) 32B6		b (ZO) 23B2 (ZN) 32B7
c (ZO) 22G6 (ZN) 32F2		c (ZO) 22G6 (ZN) 32F3
d (ZO) 22H2 (ZN) 26A2		d (ZO) 22H2 (ZN) 26C2
e (ZO) 32F2 (ZN) 22B3		e (ZO) 32F3 (ZN) 22D3

RELAY

DESIG	LSHA		LSHB		LTA		LTAA		LTB		LTBA		LTS2		LTS3		LTS4		LTS5		LTS6		LTS7		DESIG
CODE	AF113		AF113		AF132		AJ12		AF132		AJ12		AF94		AF94		AF94		AF94		AF94		AF94		CODE
OPTION	ZO		ZO																						OPTION
	CONT ARR	LOC	CONT ARR	LOC	CONT ARR	LOC	CONT ARR	LOC	CONT ARR	LOC	CONT ARR	LOC	CONT ARR	LOC	CONT ARR	LOC	CONT ARR	LOC	CONT ARR	LOC	CONT ARR	LOC	CONT ARR	LOC	
12					M	22H3	EBM	21G3	M	22G7	EBM	21G3	EM	21G1	EM	21B6	EM	21C6	EM	21E6	EM	21G6	EM	22G0	12
11					M	21D1	EBM	23B6	M	21D1	EBM	23C6	M	21G1	M	21B6	M	21D6	M	21E6	M	21G6	M	22G0	11
10	EBM	22H2	EBM	22H6	M	21A1	EBM	32E1	M	21B1	EBM	32E1	M	23A2	M	23A2	M	23A2	M	23A2	M	23A2	M	23A2	10
9	B	26A2	B	26D2	M	20F6	EBM	21D8	M	20G6	EBM	21D8													9
8	EBM	23B2	EBM	23C2	BM	22A0	EBM	21G8	BM	22C0	EBM	21H8	EBM	22C3	EBM	22C4	EBM	22C4	EBM	22C4	EBM	22C5	EBM	22C5	8
7	B		B		M	20D6	EBM	32B5	M	20D6	EBM	32B5	B	22A3	B	22A4	B	22A4	B	22A4	B	22A5	B	22A5	7
6	EBM	32B4	EBM	32B5	BM	30G6	EBM	22F3	BM	30G5	EBM	22F3	EMB	20B2	EMB	20D2	EMB	20G2	EMB	20B7	EMB	20D7	EMB	20G7	6
5	B		B		M	20A6	EBM	23F5	M	20B6	EBM	23G5													5
4	EBM	22B3	EBM	22D3	M	20F1	EBM	24A9	M	20G1	EBM	24B9	EBM	24A4	EBM	24B4	EBM	24B4	EBM	24C4	EBM	24D4	EBM	24D4	4
3	B	32F2	B	32F3	M	20B1	EBM	32C2	M	20D1	EBM	32C3													3
2					M	20A1	EBM	22C7	M	20B1	EBM	22D7	M	23B2	M	23B2	M	23B2	M	23B2	M	23B2	M	23B2	2
1					M	22H1	EBM	23B3	M	22G5	EBM	23C3	M	24G4	M	24G4	M	24G4	M	24G4	M	24G4	M	24G4	1
COIL		22A2		22C2		22A7		22A7		22A4		22B4		21F2		21A7		21C7		21E7		21F7		22F1	COIL

DRAWING ISSUE

12B	PTK WM
24D	WPK SAM KFJ
28D	PJS SAK GFH
29B	WPK
30D	GFH DF PJS GFH
33D	FED GJS RHP
36B	ROZ PJS LDJ
37B	ROZ PJS LDJ
39B	ROZ PJS LDJ
43B	

RELAY

DESIG	LTSB		LTSG		NT		SMTA		SMTB		TRLA		TRLB		WIL		WILA		WLGA		WL				DESIG
CODE	AF94		AF94		AF88		AJ53		AJ53		AJ12		AJ12		AJ3		AK7				AJ3				CODE
OPTION																									OPTION
	CONT ARR	LOC	CONT ARR	LOC	CONT ARR	LOC	CONT ARR	LOC	CONT ARR	LOC	CONT ARR	LOC	CONT ARR	LOC	CONT ARR	LOC	CONT ARR	LOC	CONT ARR	LOC	CONT ARR	LOC	CONT ARR	LOC	
12	EM	22F0	EM	22F0	M	19G7	M	14D3	M	14H3	EBM	20A8	EBM	20D8	EMB	32F6	EBM	32G4			EMB	32E6			12
11	M	22F0	M	22F0	B	98J	M	15C3	M	15D3	EBM	20D3	EBM	20F8	BM	32F7	EBM				BM	32D7			11
10	M	23A2	M	23A2	M	19H7	EBM	14E1	EBM	14A2	EBM	20F3	EBM	21A3	EBM	32G3	EBM				EBM	32D3			10
9					B	9C3	M	a	M	a	EBM	20A8	EBM	21D3	M		EM				M				9
8	EBM	22C5	EBM	22C6	BM		EBM	32C6	EBM	32C7	EBM		EBM		EBM	32E4	EM	32F7			EMB	32H3			8
7	B	22A5	B	22A6	B	9C0	M	9F6	M	9F6	EBM	21D3	EBM	20A7											7
6	EMB	21B3	EMB	21E1	BM	18H5	EBM	14A1	EBM	14E2	EBM	21A3	EBM	20G2	EMB	24C7					EMB	24A7			6
5					B	98D	M	17B2	M	17C2	EBM	32D5	EBM	32D5	M				EM	22E8	M					5
4	EBM	24E4	EBM	24F4	M	12F2	EBM	98E	EBM	90E	EBM	20F7	EBM	20D2	EBM	32D3			EM		EBM	32D4			4
3					B	19F6	M	15E1	M	15G0	EBM	20D7	EBM	20A2	BM				EBM		BM					3
2	M	23B2	M	23B2	M	12D2	M	15C0	M	15D0	EBM	24G5	EBM	24G4	EBM	24D5			EBM	22D8	EBM	32C3			2
1	M	24G4	M	24G4	B	19F6	M	14D0	M	14H0	EBM	24H4	EBM	24H5	BM	24A5			EBM	32G4	BM	24C8			1
COIL		22E1		22E1		18G5		23F2		23G2		22B7		22C7		24C7		32F7		22C8		24A7			COIL

	(WW) 15E3	(WW) 15G3
a		a
	(WX) 9D4	(WX) 9B4

RELAY

DESIG	WLA		WUA		WLG		WU		ZIL		ZL		ZLG		ZL		ZU				DESIG
CODE	AK7				AF98		AF98		AF110		AF98		AF98		AJ5		AJ39				CODE
OPTION															B		A				OPTION
	CONT ARR	LOC	CONT ARR	LOC	CONT ARR	LOC	CONT ARR	LOC	CONT ARR	LOC	CONT ARR	LOC	CONT ARR	LOC	CONT ARR	LOC	CONT ARR	LOC	CONT ARR	LOC	
12			EBM	29H6					B	24E5					EBM	11D9	EBM	11D9			12
11			EBM												EBM	18A1	EBM	18A1			11
10			EBM		EBM	32E3	EBM	29F3	EBM	32D4	EBM	32C4	EBM		EBM	10D9	EBM	10D9			10
9			EM		B		B				B		B		EBM	18A2	EBM	18A2			9
8			EM	29H3	EBM	32G4	EBM	29E3	EBM	32F6	EBM	32D6	EBM	22C8	EBM	98J	EBM	98J			8
7					B		B				B	24E6	B		EBM		EBM				7
6					EMB		EMB	12B6	EBM	24B5	EMB	24D6	EMB	22C8	EBM	11E9	EBM	11E9			6
5	EM	32E7			B		B	29H2			B	24B6	B		EBM	29F4	EBM	29F4			5
4	EM				EBM	32F4	EBM	29H7	EBM	24D8	EBM	24B8	EBM	32E4	EBM	10E9	EBM	10E9			4
3	EBM				B		B				B		B		EBM	29G2	EBM	29G2			3
2	EBM				M	22E8	M	29G2			M	24A6	M	22B8	EBM	90J	EBM	90J			2
1	EBM	32H4													EBM	12C7	EBM	12C7			1
COIL		32D7		29G3		22D8		12B6		24E7		24B7		22E7		12C8		12C6			COIL

RELAY

DESIG	LTCA	LTCB
CODE	AJ202	AJ202
OPTION		
24	21E3	21E4
23	21C3	21C4
22	20H8	20H8
21	20E8	20E8
20	20C8	20C8
19	20H3	20H3
18	20E3	20E3
17	20C3	20C3
16	21D3	21D4
15	21B3	21B4
14	20F8	20F8
13	20D8	20D8
12	20A8	20A8
11	20F3	20H3
10	20D3	20D3
9	20A3	20A3
8	21C1	21D1
7	21A1	21A1
6	20F6	20F8
5	20C6	20D8
4	20A6	20A8
3	20F1	20F1
2	20C1	20D1
1	20A1	20A1
COIL	22G1	22G5

RELAY

COS

898

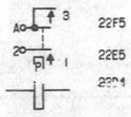

RELAY

280EE

	LT2	LT3	LT4	LT5	LT6	LT7	LT8	LT9
	21F2	21A7	21C7	21E7	21G7	22F2	22E2	22E2
	20A2	20D2	20F2	20A7	20D7	20F7	21A2	21D2

NETWORK

DESIG	LOC	CODE
LEA	23B4	186A
LEB	23C4	186A
LTS2	21G2	185A
LTS3	21B7	185A
LTS4	21C7	185A
LTS5	21E7	185A
LTS6	21G7	185A
LTS7	22G1	185A
LTS8	22F1	185A
LTS9	22F1	185A
(WG) SMO-9	~~24A4-F4~~ 24H5,G5	186A

RESISTOR

DESIG	LOC	CODE
COSA	23D5	188W
COSB	23D5	18KE
[1] L02 L12	20B3	198M
[1] L03 L13	20D3	198M
[1] L04 L14	20G3	198M
[1] L05 L15	20B8	198M
[1] L06 L16	20D8	198M

RESISTOR

DESIG	LOC	CODE
[1] L07 L17	20G8	198M
[1] L08 L18	21B4	198M
[1] L09 L19	21E4	198M
LTA2	20A0	18KY
LTA3	20C0	18KY
LTA4	20F0	18KY
LTA5	20A5	18KY
LTA6	20C5	18KY
LTA7	20F5	18KY

RESISTOR

DESIG	LOC	CODE
LTA8	21A0	18KY
LTA9	21C0	18KY
[1] LTB2 LT33	20B0	19AAH
[1] LTB4 LTB5	20G0	19AAH
[1] LTB6 LTB7	20D5	19AAH
[1] LTB8	21B1	19AAH
[1] LTB9	24A4-F4 24H5,G5	KS13490, L1, 33,000Ω
WIL	24C7	19RL
WILA	32F8	18AE

RESISTOR

DESIG	LOC	CODE
WL	24A7	19RL
WLA	32D8	18AE
WLGA	22E8	18AE
WU	12B7	18DH
WUA	29G4	18AE
ZU	12C7	18AC

DIODE

	DESIG	LOC	CODE
(XH)	SMTA	9C4	446F
	SMTB	9D4	446F

LINE, LINK, AND MARKER CIRCUIT 2

SD-65741-01-C8

43

BELL TELEPHONE LABORATORIES INCORPORATED

6S

PRINTED IN U.S.A.

SD-65741-01-C8

APP FIG. 10

RELAY DESIG	MTA		MTB		NAA		NAB		NCA		NCB						RLSA		RLSA		DESIG
CODE	AF132		AF132		AJ12		AJ12		AJ3		AJ3						AJ12 ZH		AJ39 ZI		CODE
OPTION																					OPTION
	CONT ARR	LOC	CONT ARR	LOC	CONT ARR	LOC	CONT ARR	LOC	CONT ARR	LOC	CONT ARR	LOC	CONT ARR	LOC	CONT ARR	LOC	CONT ARR	LOC	CONT ARR	LOC	
12	M	25A/G1	M	25A/G6	EBM	25A/C2	EBM	25A/C7	EMB	25A/D2	EBM	25A/D7					EBM	26G5	EBM	26G5	12
11	M	25A/F2	M	25A/F7	EBM	16C5	EBM	14A2	BM	14A7	BM	14B7					EBM	23A5	EBM	b	11
10	M	25A/B2	M	25A/B7	EBM	25A/D4	EBM	25A/D9	EBM	14E1	EBM	14B2					EBM	23B4	EBM	a	10
9	M	25A/C2	M	25A/C7	EBM	b	EBM	14E2	M	25A/C2	M	25A/C7					EBM	23G2	EBM	23G2	9
8	BM	33B1	BM	33B1	EBM	33B1	EBM	33B1	EBM	25B/B5	EBM	25B/D5					EBM	2E1	EBM	2E1	8
7	M	25A/D2	M	25A/E7	EBM	a	EBM	a									EBM	30D4	EBM	30D4	7
6	BM	33D5	BM	33D5	EBM	34E4	EBM	34F4	EBM	25A/D1	EMB	25A/D6					EBM	30A6	EBM	30A6	6
5	M	25A/D1	M	25A/E6	EBM	14C7	EBM	14C5	M	25A/C1	M	25A/C6					EBM	2G2	EBM	2G2	5
4	M	25A/C2	M	25A/C7	EBM	25A/D0	EBM	25A/D5	EBM	14B1	EBM	14E2					EBM	23F1	EBM	23F1	4
3	M	25A/B2	M	25A/B7	EBM	14A1	EBM	16G5	BM	16G4	BM	16G5					EBM	26F1	EBM	26F1	3
2	M	25A/F1	M	25A/F6	EBM	25A/C2	EBM	25A/C6	EBM	16D4	EBM	16D5					EBM	25A/G6	EBM	25A/G6	2
1	M	a	M	a	EBM	14E1	EBM	b	BM	14B5	BM	14A5					EBM	25A/F1	EBM	25A/F1	1
COIL		25A/F2		25A/F7		25A/C2		25A/C7		25A/D2		25A/D7						25A/E2		25A/E2	COIL

RELAY DESIG	RLSAA		RLSB		RLSB		RLSBA				SAA		SAB		STA						DESIG
CODE	AJ12		AJ12 ZH		AJ39 ZI		AJ12				AF64		AF64		AJ15						CODE
OPTION																					OPTION
	CONT ARR	LOC	CONT ARR	LOC	CONT ARR	LOC	CONT ARR	LOC	CONT ARR	LOC	CONT ARR	LOC	CONT ARR	LOC	CONT ARR	LOC	CONT ARR	LOC	CONT ARR	LOC	
12	EBM	2B6	EBM	25A/F3	EBM	25A/F3	EBM	2B6			EMB	25A/B2	EMB	25A/B7	EBM	17D7					
11	EBM	4C8	EBM	25A/F8	EBM	25A/F8	EBM	4A8			M	25A/D3	M	25A/D8	EBM	25A/B3					11
10	EBM	12E6	EBM	26F5	EBM	26F5	EBM	12D6			M	13B5	M	13B5	EBM	13B5					10
9	EBM	15E6	EBM	23F2	EBM	23F2	EBM	15E6			BM	25A/A2	BM	25A/A7	EBM	13E5					9
8	EBM	15C6	EBM	2G1	EBM	2G1	EBM	15C6			M	13F5	M	13F5	EMB	25A/A2					8
7	EBM	30B6	EBM	30D3	EBM	30D3	EBM	30B6			BM	25A/A1	BM	25A/A7	EBM	33C1					7
6	EBM	17F4	EBM	30A6	EBM	30A6	EBM	17G4			EMB	25A/B1	EMB	25A/B6	EMB	25A/A1					6
5	EBM	12D5	EBM	2E2	EBM	2E2	EBM	12E5			BM	12C5	BM	12C5	EMB	12C5					5
4	EBM	4A7	EBM	23G1	EBM	23G1	EBM	4C7			M	24A8	M	24B8	EBM	32C2					4
3	EBM	2B3	EBM	23B5	EBM	b	EBM	2B3			BM	32C1	BM	29F2	EBM	24A8					3
2	EBM	30G4	EBM	23A4	EBM	a	EBM	30G4			M	12C5	M	12C6	EBM	12B5					2
1	EBM	34G4	EBM	26G1	EBM	26G1	EBM	34G4			M	25A/D1	M	25A/D6	EBM	25A/B1					1
COIL		25A/E2		25A/E7		25A/E7		25A/E7				25A/B2		25A/B7		25A/A2					COIL

RELAY DESIG	STAR		STBR		STB				TA		TB		TAA		TAB		TMA		TMB		DESIG
CODE	AK4				AJ15				AK4				AJ54		AJ54		AG8		AG8		CODE
OPTION									VR		VR		VQ		VQ		VQ		VQ		OPTION
	CONT ARR	LOC	CONT ARR	LOC	CONT ARR	LOC	CONT ARR	LOC	CONT ARR	LOC	CONT ARR	LOC	CONT ARR	LOC	CONT ARR	LOC	CONT ARR	LOC	CONT ARR	LOC	
12	M	34B4			EBM	17D8			M				EM	25A/G4	EM	25A/G8					12
11	EBM	b			EBM	25A/B8			EBM	25A/C3			M	25A/B3	M	25A/B8					11
10	EBM	a			EBM	13B5			EBM	25A/C0			EBM	15C6	EBM	15E6					10
9	EMB	c			EBM	13E5			EMB	25A/A3			B	25A/G6	B	25A/F2					9
8	EMB	23G3			EMB	25A/A6			EMB	25A/A1			EBM	25A/G5	EBM	25A/G6	M	25A/H1	M	25A/H6	8
7					EBM	33C1							B	25A/C3	B	25A/C8	B		B		7
6					EMB	25A/A6							EMB		EMB		BM	25A/C1	BM	25A/C6	6
5			EMB	c	EBM	12C5					EMB	25A/A6	B	25A/F1	B	25A/F7					5
4			EMB	23F4	EBM	29E2					EMB	25A/A0	EBM	25A/G0	EBM	25A/G2	M	25A/H0	M	25A/H5	4
3			EBM	b	EBM	24A8					EBM	25A/C5	B	25A/C1	B	25A/C5					3
2			EBM	a	EBM	12B5					EBM	25A/C8	M	25A/G3	M	25A/G8					2
1			M	34C4	EBM	25A/B6							M	25A/B1	M	25A/B6					1
COIL		25A/A2		25A/A7		25A/A7				25B/B4		25B/D4		25A/G3		25A/G8		25A/G0		25A/G5	COIL

RELAY DESIG			TOA		TOB		TOKA		TOKB		TOLA		TOLB				TRA		TRB		DESIG
CODE			AG2		AG2		AF64		AF64		AF9		AF9				AG21		AG21		CODE
OPTION			VQ		VQ																OPTION
	CONT ARR	LOC	CONT ARR	LOC	CONT ARR	LOC	CONT ARR	LOC	CONT ARR	LOC	CONT ARR	LOC	CONT ARR	LOC	CONT ARR	LOC	CONT ARR	LOC	CONT ARR	LOC	
12							EMB	25A/F9	EMB	25A/F9	EM		EM								12
11							M	26F3	M	26G3											11
10			M	25A/G4	M	25A/G4	M	26F9	M	26G9	M	26F8	M	26G8			M	26G5	M	26F5	10
9			B	25A/B3	B	25A/B8	BM	c	BM	c	B		B								9
8			M	25A/G8	M	25A/G7	M	25A/F4	M	25A/F4	EBM		EBM				EMB	b	EMB	b	8
7			B		B		BM	31A0	BM	31A0	B	26G2	B	26F3							7
6			M		M		EMB	2E0	EMB	2G0	EMB	34A4	EMB	34B4			EMB	a	EMB	a	6
5			B	25A/B1	B	25A/B6	BM	b	BM	b	B	26F2	B								5
4			M	25A/G7	M	25A/G7	M	25A/F5	M	25A/F5	EBM	33D1	EBM	33D1			M	26F1	M	26G1	4
3							BM	a	BM	a											3
2			M	25A/G3	M	25A/G3	M	26F2	M	26G2	M	26F7	M	26G7			M	30G3	M	30G3	2
1							M	26F3	M	26G3											1
COIL				25A/H0		25A/H5		26F3		26G3		26F7		26G7				25A/D2		25A/D7	COIL

(VQ) 25A/G0, (VR) 25B/B6

(VQ) 25A/G5, a (VR) 25B/D6

a (VQ) 14D7, 14D5, (VR) 16D2

b (VQ) 16C4, (VR) 25B/D5

a (VQ) 14D5, (VR) 14D7

b (VQ) 16G4, (VR) 25B/D5

a (9) 23B4, (22) 38H2

b (9) 23A5, (22) 38H7

a (9) 23A4, (22) 38H2

b (9) 23B5, (22) 38H7

a (A) 5A/H5, (B) 16E2, (VR)

a (A,VR) 5A/H6, (B) 16B7

b (A) 5A/H5, (B) 16B2, (VR) 25B/B5

b (A) 5A/H6, (B) 16B7, (VR) 25B/D5

c (VQ) 23F3, (VR) 23F0

c (VQ) 23G4, (VR) 23H0

a 3H0 26F6

b 25A/F0 2G2

c 3G0 26G9

a 3F0 26G6

b 25A/F0 2E2

c 3F0 26F9

a 25A/E1 26A7

b 25A/E2 26A8

a 25A/E6 26B7

b 25A/E7 26B8

CONNECTOR

	DESIG	LOC	CODE
(VR)	J1	25B/B3	910A

NETWORK

DESIG	LOC	CODE
RLSA	25A/E2	186A
RLSB	25A/E7	186A

RESISTOR

	DESIG	LOC	CODE
(VR)	TA	25B/B4	221A, 988KΩ±1%
	TB	25B/C4	221A, 988KΩ±1%

DIODE

	DESIG	LOC	CODE
(HF)	RLSA	37D2	446F
	RLSB	37D3	446F
(VR)	TA	25B/B4	458A
	TB	25B/D4	458A

RELAY DELAY TIMER

	DESIG	LOC	CODE
(VR)	T	25B/B3	ED-99514-( )

DRAWING ISSUE 41B

ISSUE 46D

LINE, LINK, AND MARKER CIRCUIT (2)

BELL TELEPHONE LABORATORIES INCORPORATED

SIZE 6S

SD-65741-01-C9

SD-65741-01-C9

APP FIG.11

RELAY

DESIG	JRAL				LAL1		LAL2		LAL2A		MAL				RLAL				TAAL		TAL		TOAL		DESIG
CODE	AF115				AF85		AF85		AF85		AF118				AF85				AF9		AF85		AF35		CODE
OPTION																									OPTION
	CONT ARR	LOC	CONT ARR	LOC	CONT ARR	LOC	CONT ARR	LOC	CONT ARR	LOC	CONT ARR	LOC	CONT ARR	LOC	CONT ARR	LOC	CONT ARR	LOC	CONT ARR	LOC	CONT ARR	LOC	CONT ARR	LOC	
12																			EM	30F3					12
11																									11
10	M	33D7			EBM		EBM		EBM		EBM				EBM				M	33D4	EBM	31B0	EBM		10
9					PM	33F4	PM		PM	33F4	PM				PM	33D4			B	26F5	PM	31B0	PM		9
8	EBM																		EBM						8
7																			B	26G5					7
6	B				EBM		EBM		EBM		EBM	30E4			EBM				EMB	30G2	EBM	33E5	EBM		6
5																			B	26G0					5
4	M	29B8			PM	33F7	PM		PM	33F7	PM	33H8			PM	33D7			EBM	26F0	PM	33E7	PM		4
3					M	32B3	M	32A7	M	32A7	M	33G5			M	30D3					M	31A0	M	33B2	3
2	EBM	33D4																	M	33G7					2
1																									1
COIL		29A9				32B4		32B7		32A7		30D5				30C2				30G2		31A0		33B2	COIL

LAMPS

		DESIG	LOC	CODE
SEE NOTE 129	(VO)	COAL	33B9	MI
	(VP)	COAL	33B9	2Y
		JRAL	33D8	
		LAL1	33F8	
		LAL2	33F8	
		MAL	33H8	
		RLAL	33D8	
		TAAL	33G8	(WS,VP) 2Y
		TAL	33E8	(VO) MI
		TOAL	33E8	SEE NOTE 129
		TRAL	33C8	
		TS	33G8	
		UAL	33B8	
		UALI	33B8	
		UAL2	33C8	
SEE NOTE 129	(VO)	XCAL	33B9	MI
	(VP)	XCAL	33B9	2Y

RELAY

DESIG	TOALA		TRAL				UAL		UALI		UALIA		UAL2				XCAL		COAL				DESIG
CODE	AF85		AF28				AF85		AF85		AF85		AF85				AK24						CODE
OPTION																	WT		WT				OPTION
	CONT ARR	LOC	CONT ARR	LOC	CONT ARR	LOC	CONT ARR	LOC	CONT ARR	LOC	CONT ARR	LOC	CONT ARR	LOC	CONT ARR	LOC	CONT ARR	LOC	CONT ARR	LOC	CONT ARR	LOC	
12															BM		BM	32D4					12
11																	BM						11
10	EBM		M	33E4			EBM		EBM		EBM		EBM										10
9	PM	33B4					PM	33C4	PM		PM	33F4	PM	33C4			M	33B4					9
8			EMB														M	33B9					8
7			B	8C6																			7
6	EBM		EBM	33C7			EBM		EBM		EBM		EBM										6
5			B	8A6															M	33B9			5
4	PM	33E7	PM	31E4			PM	33B7	PM		PM	33B7	PM	33C7					M	33B4			4
3	M	33C2					M	29B4	M	29C4	M	29C4	M	29B2									3
2																			BM				2
1																			BM	32D1			1
COIL		33B2		31E4				29B3		29D3		29C3		29A2				32D1		32D1			COIL

DRAWING ISSUE

1	
2B	
3B	
12B	
16B	
18A	
21B	
33D	
37B	
400	

APP FIG.12, 13, 14

DESIG	TRUNK SWITCH 0								TRUNK SWITCH 1								LINE SWITCHES	2	3	4	5	LINE SWITCHES 6, 7				TRUNK SWITCH 8					
APP FIG. NO.	12								13									14	14	13	13	12				12					
CODE	324AJ				324AL				324AJ				324AL				324AJ	324AK				324AJ		324AK		324AJ			324AL		
OPTION	ZZ				YA				ZZ				YA				ZV	ZX				ZW		ZY		ZZ			YA		
HORIZONTAL LEVEL	WIRE								WIRE								WIRE					WIRE				WIRE					
	0-2				3-5				0-2				3-5				0-2	3-5				0-2		3-5		0-2			3-5		
0 VERT					0-4	5-7	8	9					0,2,4,6	1,3,5,7	8	9		0-9						0-9					1,3	2,4	5-9
0 LOC					27G2	27G3	27G7	28G3					27G5	27G7	27G8	28G6		27G1						27G1					27G5	27G7	27G2
1 VERT	0-4	5-7	8	9					0,2,4,6	1,3,5,7	8	9					0-9					0-9				1,3	2,4	5-9			
1 LOC	27E2	27E3	27E8	28E3					27E5	27E6	27E8	28E6					27E0					27E0				27E5	27E6	27E2			
2-9 VERT	0-4	5-7	8	9	0-4	5-7	8	9	0,2,4,6	1,3,5,7	8	9	0,2,4,6	1,3,5,7	8	9	0-9	0-9				0-9		0-9		1,3	2,4	5-9	1,3	2,4	5-9
2-9 LOC	27B2-27D2	27B3-27D3	27B8-27D8	28B3-28D3	27B2-27D2	27B3-27D3	27B8-27D8	28B3-28D3	27B5-27D5	27B7-27D7	27B8-27D8	28B6-28D6	27B5-27D5	27B7-27D7	27B8-27D8	28B6-28D6	27B0-27D0	27B0-27D0				27B0-27D0		27B0-27D0		27B5-27D5	27B7-27D7	27B2-27C2	27B5-27D5	27B7-27D7	27B2-27D2

	DESIG	LOC
MAGNETS	THM00-04	34D6
	THM05,06	34F9
	THM07	34G6
	THM08	17B3
	THM09	17A3
	SM00	24H6
	SM01	24G6
	SM02-09	24A3-24F3

	DESIG		LOC
HOLD O.N. CONTACTS	THM00-04	(ZZ) 1T, 2T (YA) 1,2,3	
		(ZZ) 1B, 2B (YA) 4,5	
	THM05	(ZZ) 1T, 2T (YA) 1,2,3	2B0
		(ZZ) 1B, 2B (YA) 4,5	7E3
	THM06	(ZZ) 1T, 2T (YA) 1,2,3	2B0
		(ZZ) 1B, 2B (YA) 4,5	7A8
	THM07-09	(ZZ) 1T, 2T (YA) 1,2,3	
		(ZZ) 1B, 2B (YA) 4,5	

	DESIG	LOC
MAGNETS	THM10,12,14,16	9E3
	THM11,13,15,17	9F3
	THM18,19	17C3
	SM10	24H6
	SM11	24G6
	SM12-19	24A3-24F3

	DESIG		LOC
HOLD O.N. CONTACTS	THM10-19	(ZZ) 1T, 2T (YA) 1,2,3	
		(ZZ) 1B, 2B, (YA) 4,5	

	DESIG	LOC
MAGNETS	LHM20-29	35H5
	LHM30-59	1E6
	SM20,30,40,50	24H6
	SM21,31,41,51	2466
	SM22-29, 32-39, 42-49, 52-59	24A3-24F3

	DESIG		LOC
HOLD O.N. CONTACTS	LHM20-29	(ZV) 1T, 2T (ZX) 3,4,5	2
		(ZV) 1B, 2B (ZX) 1,2	35B5
	LHM30-59	(ZV) 1T, 2T (ZX) 3,4,5	1A7
		(ZV) 1B, 2B (ZX) 1,2	1D6
		2 (ZV) 35B5 (ZX) 35B7	

	DESIG	LOC
MAGNETS	LHM60-79	1E6
	SM60,61,70,71	24G6,24H6
	SM62-69, 72-79	24A3-24F3

	DESIG		LOC
HOLD O.N. CONTACTS	LHM60-79	(ZV) 1T, 2T (ZY) 3,4,5	1A7
		(ZV) 1B, 2B (ZY) 1,2	1D6

	DESIG	LOC
MAGNETS	THM80	34F9
	THM81,83	9E3
	THM82,84	9F3
	THM85-89	34D6
	SM80	24H6
	SM81	2466
	SM82-89	24A3-24F3

	DESIG		LOC
HOLD O.N. CONTACTS	THM80	(ZZ) 1T, 2T (YA) 1,2,3	2D0
		(ZZ) 1B, 2B (YA) 4,5	6A3
	THM81-89	(ZZ) 1T, 2T (YA) 1,2,3	
		(ZZ) 1B, 2B (YA) 4,5	

NETWORK

DESIG	LOC	CODE
THM08	17B4	186A
THM18	17D4	186A

LINE, LINK, AND MARKER CIRCUIT

BELL TELEPHONE LABORATORIES, INC

40

SD-65741-01-C10

SD-65741-01-C10

APP FIG. 15

RELAY

DESIG	SMC1		SMC4		SMC5																		DESIG
CODE	AF24		AF24		AF24																		CODE
OPTION																							OPTION
	CONT ARR	LOC	CONT ARR	LOC	CONT ARR	LOC	CONT ARR	LOC	CONT ARR	LOC	CONT ARR	LOC	CONT ARR	LOC	CONT ARR	LOC	CONT ARR	LOC	CONT ARR	LOC	CONT ARR	LOC	
12	M	23F7	M	23F7	M	23F7																	12
11	M	23G7	M	23G7	M	23G7																	11
10	M	24H6	M	24H6	M	24H6																	10
9	M	24F4	M	24F4	M	24F4																	9
8	M	24E4	M	24E4	M	24E4																	8
7	M	24D4	M	24D4	M	24D4																	7
6	M	24D4	M	24D4	M	24D4																	6
5	M	24C4	M	24C4	M	24C4																	5
4	M	24B4	M	24B4	M	24B4																	4
3	M	24B4	M	24B4	M	24B4																	3
2	M	24A4	M	24A4	M	24A4																	2
1	M	24G6	M	24G6	M	24G6																	1
COIL		24C0		24E0		24F0																	COIL

APP FIG. 16

RELAY

DESIG	SMC0		SMC6		SMC7		SMC8																DESIG
CODE	AF24		AF24		AF24		AF24																CODE
OPTION			V		V																		OPTION
	CONT ARR	LOC	CONT ARR	LOC	CONT ARR	LOC	CONT ARR	LOC	CONT ARR	LOC	CONT ARR	LOC	CONT ARR	LOC	CONT ARR	LOC	CONT ARR	LOC	CONT ARR	LOC	CONT ARR	LOC	
12	M	23F7	M	23F7	M	23F7	M	23F7															12
11	M	23G7	M	23G7	M	23G7	M	23G7															11
10	M	24H6	M	24H6	M	24H6	M	24H6															10
9	M	24F4	M	24F4	M	24F4	M	24F4															9
8	M	24E4	M	24E4	M	24E4	M	24E4															8
7	M	24D4	M	24D4	M	24D4	M	24D4															7
6	M	24D4	M	24D4	M	24D4	M	24D4															6
5	M	24C4	M	24C4	M	24C4	M	24C4															5
4	M	24B4	M	24B4	M	24B4	M	24B4															4
3	M	24B4	M	24B4	M	24B4	M	24B4															3
2	M	24A4	M	24A4	M	24A4	M	24A4															2
1	M	24G6	M	24G6	M	24G6	M	24G6															1
COIL		24A0		24F0		24G0		24G0															COIL

DRAWING ISSUE

1	2-2-71 M.S.
2B	9-6-72 W.S.
11B	6-6-74 R.O.B.
24D	11-4-74 MPA SAK KFJ
33D	11-5-75 FED RHP
35D	11-5-75 FED RHP

APP FIG. 17

RELAY

DESIG	SL20-29																						DESIG
CODE	AF10																						CODE
OPTION																							OPTION
	CONT ARR	LOC	CONT ARR	LOC	CONT ARR	LOC	CONT ARR	LOC	CONT ARR	LOC	CONT ARR	LOC	CONT ARR	LOC	CONT ARR	LOC	CONT ARR	LOC	CONT ARR	LOC	CONT ARR	LOC	
12	EM	35F7																					12
11																							11
10	M																						10
9																							9
8	EBM	a																					8
7	B																						7
6	EMB																						6
5																							5
4	M	35B5																					4
3																							3
2	M	35A6																					2
1																							1
COIL		35F0																					COIL

a (ZE) 35B2, (ZF) 35D4

THERMISTOR

DESIG	LOC	CODE
T20-29	35F7	8C

RELAY

DESIG																							DESIG
CODE																							CODE
OPTION																							OPTION
	CONT ARR	LOC	CONT ARR	LOC	CONT ARR	LOC	CONT ARR	LOC	CONT ARR	LOC	CONT ARR	LOC	CONT ARR	LOC	CONT ARR	LOC	CONT ARR	LOC	CONT ARR	LOC	CONT ARR	LOC	
12																							12
11																							11
10																							10
9																							9
8																							8
7																							7
6																							6
5																							5
4																							4
3																							3
2																							2
1																							1
COIL																							COIL

LINE, LINK AND MARKER CIRCUIT

BELL TELEPHONE LABORATORIES, INC

35

SD-65741-01-C11

SD-65741-01-C11

APP FIG.19

RELAY DESIG	RL0		RL1																				DESIG
CODE	AK 5																						CODE
OPTION																							OPTION
	CONT ARR	LOC	CONT ARR	LOC	CONT ARR	LOC	CONT ARR	LOC	CONT ARR	LOC	CONT ARR	LOC	CONT ARR	LOC	CONT ARR	LOC	CONT ARR	LOC	CONT ARR	LOC	CONT ARR	LOC	
12			M	37B5																			12
11			B																				11
10			B																				10
9			B	36C3																			9
8																							8
7																							7
6																							6
5																							5
4	B	36C3																					4
3	B																						3
2	B																						2
1	M	37B6																					1
COIL		37E6		37B6																			COIL

APP FIG.20

RELAY DESIG	A(0-9)		B(0-9)																				DESIG
CODE	AF79		AF79																				CODE
OPTION																							OPTION
	CONT ARR	LOC	CONT ARR	LOC	CONT ARR	LOC	CONT ARR	LOC	CONT ARR	LOC	CONT ARR	LOC	CONT ARR	LOC	CONT ARR	LOC	CONT ARR	LOC	CONT ARR	LOC	CONT ARR	LOC	
12	EMB	36C4	EMB	36C4																			12
11	M	36F6	M	36G6																			11
10	EBM		EBM																				10
9																							9
8	EBM	36G4	EBM	36G4																			8
7																							7
6	EMB	36B4	EMB	36E4																			6
5																							5
4	EBM	36H4	EBM	36H4																			4
3																							3
2	EBM	36E4	EBM	36B4																			2
1	M	36B6	M	36D6																			1
COIL		36B5		36B5																			COIL

DIODES

DESIG	LOC	CODE
A	36B5	446F
B	36E5	446F

APP FIG.21

RELAY DESIG	MS (EVEN)		MS (ODD)																				DES:G
CODE	AK 23																						CODE
OPTION																							OPTION
	CONT ARR	LOC	CONT ARR	LOC	CONT ARR	LOC	CONT ARR	LOC	CONT ARR	LOC	CONT ARR	LOC	CONT ARR	LOC	CONT ARR	LOC	CONT ARR	LOC	CONT ARR	LOC	CONT ARR	LOC	
12			BM																				12
11			BM	36E6																			11
10																							10
9																							9
8																							8
7																							7
6																							6
5																							5
4																							4
3																							3
2	BM	36E6																					2
1	BM																						1
COIL		36F5		36F5																			COIL

RESISTORS

DESIG	LOC	CODE
PC-	36G4	19RP

RELAY DESIG																							DESIG
CODE																							CODE
OPTION																							OPTION
	CONT ARR	LOC	CONT ARR	LOC	CONT ARR	LOC	CONT ARR	LOC	CONT ARR	LOC	CONT ARR	LOC	CONT ARR	LOC	CONT ARR	LOC	CONT ARR	LOC	CONT ARR	LOC	CONT ARR	LOC	
12																							12
11																							11
10																							10
9																							9
8																							8
7																							7
6																							6
5																							5
4																							4
3																							3
2																							2
1																							1
COIL																							COIL

DRAWING ISSUE

300 MAD DAG PJS GFH HW

SD-65741-01-C12

LINE, LINK, AND MARKER CIRCUIT (2) — SD-65741-01-C12

BELL TELEPHONE LABORATORIES INCORPORATED — SIZE 6S — PRINTED IN U.S.A.

APP FIG. 22

RELAY

DESIG	ALBA		ALBB				COSA		COSB				LBA		LBB		LCKI		LCK2		LEA		LEAA		DESIG
CODE	AJ54		AJ54				AJ68		AJ68				AJ27		AJ27		AK4				AF55		AJI2		CODE
OPTION																									OPTION
	CONT ARR	LOC	CONT ARR	LOC	CONT ARR	LOC	CONT ARR	LOC	CONT ARR	LOC	CONT ARR	LOC	CONT ARR	LOC	CONT ARR	LOC	CONT ARR	LOC	CONT ARR	LOC	CONT ARR	LOC	CONT ARR	LOC	
12	EM	40E3	EM	40H3			EM	I9F6	EM	I9F6			EM	40AI	EM	40CI	M	32B3			M	23F5	EBM		12
11	M	I6C4	M	I6F4			B		B								EBM				M	23H5	EBM		11
10	EBM		EBM				M	40E4	M	40H4			M	32F2	M	32F3	EBM				BM	32BI	EBM	40B7	10
9	B	30C3	B	30C3			B		B				B	38GO	B	38G5	EMB	24G3			M	40E3	EBM	32D5	9
8	EBM	32C6	EBM	32C7			EBM	I9E6	EBM	I9E5			EBM	38G5	EBM	38GO	EMB	24G4			BM	24F4	EBM	I6E3	8
7	B		B				B		B				B	40E7	B	40D7					B	26A4	EBM	I6B3	7
6	EMB	8A6	EMB	8C6			EMB	I9G6	EMB	I9G6			EMB	40DI	EMB	40DI					BM	32E5	EBM	32E5	6
5	B	9E7	B	9E7			B		B				B	40D7	B	40D7			EMB	24H4	M	24G5	EBM	24E6	5
4	EBM	34CI	EBM	34CI			M	I9F5	M	I9F5			EBM	40CI	EBM	40CI			EMB		BM	33HI	EBM	40B6	4
3	B	9E7	B	9E7			B	I9E5	B	I9E6									EBM		M	24H5	EBM	24D6	3
2	M	I6C4	M	I6F4			M	I9E3	M	I9F5			M	40B3	M	40C3			EBM		M	39B2	EBM	24C6	2
1	M	38HO	M	38H5			BM	32H6	BM	32H6									M	32B3	M	38A2	EBM	24B6	1
COIL		40AI		40BI				40F3		40H3				40AI		40CI		24F3		24H3		38G2		38H2	COIL

RELAY

DESIG	LEB		LE8A		LSHA		LSHB		LTA		LTAA		LTB		LTBA		LTCA		LTCB		LT2		LT3		DESIG
CODE	AF55		AJI2		AFII3		AFII3		AJI5		AJI2		AJI5		AJI2		AF24		AF24		AJ68		AJ68		CODE
OPTION																									OPTION
	CONT ARR	LOC	CONT ARR	LOC	CONT ARR	LOC	CONT ARR	LOC	CONT ARR	LOC	CONT ARR	LOC	CONT ARR	LOC	CONT ARR	LOC	CONT ARR	LOC	CONT ARR	LOC	CONT ARR	LOC	CONT ARR	LOC	
12	M	2365	EBM						EBM	39F5	EBM	38AO	EBM	39F5	EBM	38AO	M		M		EM	38AI	EM	38D2	12
11	M	23H5	EBM						EBM	39D5	EBM	38H3	EBM	39D5	EBM	3868	M		M		B		B		11
10	BM	32BI	EBM	40A7	EBM	40DI	EBM	40EI	EBM	39FI	EBM	32EI	EBM	39FI	EBM	32EI	M		M		M	38GO	M	38GO	10
9	M	40H3	EBM	32D5	B	26A2	B	26D2	EBM	39DI	EBM	38A5	EBM	39DI	EBM	38A5	M		M		B	40C2	B	40C2	9
8	BM	24F3	EBM	I6E5	EBM	38HO	EBM	38H5	EMB	40C2	EBM	39BO	EMB	40D2	EBM	39BO	M	39EO	M	39FO	EBM	24A5	EBM	24B5	8
7	B	26C4	EBM	I6B5	B		B		EBM	3066	EBM	32B5	EBM	3065	EBM	32B5	M	39C5	M	39C5	B	40A2	B	40A2	7
6	BM	32F5	EBM	32F5	EBM	32B4	EBM	3285	EMB	40AO	EBM	39B5	EMB	40BO	EBM	3985	M	39EO	M	39FO	EMB	38CI	EMB	36EI	6
5	M	2465	EBM	24E5	B		B		EMB	40CO	EBM	23F5	EMB	40DO	EBM	2365	M	39BO	M	39BO	B		B		5
4	BM	38H5	EBM	40A6	EBM	40AI	EBM	40BI	EBM	38F5	EBM	24A9	EBM	38F5	EBM	2489	M	38E5	M	38F5	M	38DI	M	38FI	4
3	M	24H5	EBM	24D5	B	32F2	B	32F3	EBM	38C5	EBM	32C2	EBM	38C5	EBM	32C3	M	3885	M	38C5	B	32DO	B	32DO	3
2	M	39B2	EBM	24C5					EBM	38FO	EBM	40D7	EBM	38FO	EBM	40E7	M	38EO	M	38EO	M	38G4	M	38G4	2
1	M	38A2	EBM	24B5					EBM	38CO	EBM	38GI	EBM	38CO	EBM	3865	M	38BO	M	38CO	BM	24G4	BM	24G4	1
COIL		38H7		38H7		40B3		40C3		40A7		40A7		40B7		40B7		40CI		40DI		38CI		38EI	COIL

DIODE

DESIG	LOC	CODE
COSA	40E3	446A
COSB	40H3	
(UJ) LT2	38C1	
(UK) LT2	38B3	
(UJ) LT3	38E1	
(UK) LT3	38E3	
(UJ) LT4	38C6	
(UK) LT4	38B8	
(UJ) LT5	38F6	
(UK) LT5	38E8	
(UJ) LT6	39C1	
(UK) LT6	39B3	
(UJ) LT7	39F1	
(UK) LT7	39E3	
(UJ) LT8	39C6	
(UK) LT8	39B8	
(UJ) LT9	39F6	
(UK) LT9	39E8	
SMTA	9C4	446F
SMTB	9D4	446F

NETWORK

DESIG	LOC	CODE
LEA	38H2	I86A
LEB	38H7	I86A
(WG) SMO-9	24A4-F4 24H5, G5	I86A

RESISTOR

DESIG	LOC	CODE
COSA	40F3	I8KD
COSB	40G3	I8KD
LTA2	38BO	I8KD
LTA3	38EO	I8KD
LTA4	38B5	I8KD
LTA5	38E4	I8KD
LTA6	39CO	I8KD
LTA7	39EO	I8KD
LTA8	39C4	I8KD
LTA9	39E4	I8KD

(WG) SMO-9 — 24A4-F4, 24H5, G5 — KS-13490, L1, 33,000Ω

RESISTOR

DESIG	LOC	CODE
WIL	24C7	I9RL
WILA	32F8	I8 AE
WL	24A7	I9RL
WLA	32D8	I8AE
WLGA	40F8	I8AE
WU	I2B7	I8DH
WUA	29G4	I8AE
ZU	I2C7	I8AC

VOLTAGE REDUCTION DETECTOR CIRCUIT

DESIG	LOC	CODE
VRDA	38C2, C7, E2, E7, 40F2	ED-5E009-( )
VRDB	39C2, C7, E2, E7, 40G2	ED-5E009-( )

RELAY

DESIG	LT4		LT5		LT6		LT7		LT8		LT9		NT		SMTA		SMTB		TRLA		TRLB		WIL		DESIG
CODE	AJ68		AJ68		AJ68		AJ68		AJ68		AJ68		AF88		AJ53		AJ53		AJI2		AJI2		AJ3		CODE
OPTION																									OPTION
	CONT ARR	LOC	CONT ARR	LOC	CONT ARR	LOC	CONT ARR	LOC	CONT ARR	LOC	CONT ARR	LOC	CONT ARR	LOC	CONT ARR	LOC	CONT ARR	LOC	CONT ARR	LOC	CONT ARR	LOC	CONT ARR	LOC	
12	EM	38B6	EM	38D7	EM	3982	EM	39E2	EM	39B6	EM	39D6	M	I9G7	M	I4D3	M	I4H3	EBM	38C2	EBM	39D2	EMB	32F6	12
11	B		B		B		B		B		B		B	9B3	M	I5C3	M	I5D3	EBM	38F2	EBM	39F2	BM	32F7	11
10	M	38GO	M	38GO	M	38GO	M	38GO	M	38GO	M	38GO	M	I9H7	EBM	I4E1	EBM	I4A2	EBM	38C6	EBM	39D7	EBM	32G3	10
9	B	40C2	B	40C3	B	40C3	B	40C3	B	40C4	B	40C4	B	9C3	M	a	M	a	EBM	38F7	EBM	39G7	M		9
8	EBM	24B5	EBM	24C4	EBM	24D5	EBM	24D5	EBM	24E5	EBM	24E5	BM		EBM	32C6	EBM	32C7	EBM		EBM		EBM	32E4	8
7	B	40A2	D	40A3	B	40A3	B	40A3	B	40A4	B	40A4	B	9C0	M	9F6	M	9F6	EBM	39G7	EBM	38F7			7
6	EMB	38C5	EMB	38E5	EMB	39CI	EMB	39EI	EMB	39C6	EMB	39E6	BM	I8H5	EBM	I4AI	EBM	I4E2	EBM	39D7	EBM	38C6	EMB	24C7	6
5	B		B		B		B		B		B		B	9B0	M	I7BI	M	I7CI	EBM	32D5	EBM	32D5	M		5
4	M	38D5	M	38F6	M	39DI	M	39EI	M	39D5	M	39G5	M	I2F2	EBM	9B5	EBM	9D5	EBM	39F2	EBM	38F2	EBM	32D3	4
3	B	32DO	B	32CO	B	32CO	B	32CO	B	32CO	B	32CO	B	I9F6	M	I5EI	M	I5GO	EBM	39D2	EBM	38C2	BM		3
2	M	38G4	M	38G4	M	38G4	M	38G4	M	38G4	M	38G4	M	I2D2	M	I5CI	M	I5DI	EBM	2465	EBM	24G4	EBM	2405	2
1	BM	24G4	BM	24G4	BM	24G4	BM	24G4	BM	24G4	BM	2464	B	I9F6	M	I4DO	M	I4HO	EBM	24H4	EBM	24H5	BM	24A5	1
COIL		38B6		38E6		39CI		39EI		39C6		39E6		I8G5		23F2		23G2		40C7		40C7		24C7	COIL
															(WW)	I5E3	(WW)	I5G3							
															a		a								
															(WX)	9D4	(WX)	9B4							

RELAY

DESIG	WILA		WLGA		WL		WLA		WUA		WLG		WU		XC		ZIL		ZL		ZLG		ZU		DESIG
CODE	AK7				AJ3		AK7				AF98		AF98		AF96		AFII0		AF98		AF98		AJ39		CODE
OPTION																									OPTION
	CONT ARR	LOC	CONT ARR	LOC	CONT ARR	LOC	CONT ARR	LOC	CONT ARR	LOC	CONT ARR	LOC	CONT ARR	LOC	CONT ARR	LOC	CONT ARR	LOC	CONT ARR	LOC	CONT ARR	LOC	CONT ARR	LOC	
12	EBM	32G4			EMB	32E6			EBM	29H6							B	24E5					EBM	IID9	12
11	EBM				BM	32D7			EBM														EBM	I8AI	11
10	EBM				EBM	32D3			EBM		EBM	32E3	EBM	29F3			EBM	32D4	EBM	32C4	EBM		EBM	I0D9	10
9	EM	32F7			M				EM		B		B						B		B		EBM	I8A2	9
8	EM				EBM	32H3			EM	29H3	EBM	32G4	EBM	29E3	M	32AO	EBM	32F6	EBM	32D6	EBM	40D7	EBM	9B9	8
7											B		B						B	24E6	B		EBM		7
6					EMB	24A7					EMB		EMB	I2B6	M	40G3	EBM	24B5	EMB	24D6	EMB	40C8	EBM	IIE9	6
5			EM	40F8	M		EM	32E7			B		B	29H2					B	24B6	B		EBM	29F4	5
4			EM		EBM	32D4	EM				EBM	32F4	EBM	29H7	M	40E3	EBM	24D8	EBM	24B8	EBM	32E4	EBM	I0E9	4
3			EBM		BM		EBM				B		B						B		B		EBM	29G2	3
2			EBM	40E8	EBM	32C3	EBM				M	40E7	M	25G2					M	24A6	M	40C8	EBM	9D9	2
1			EBM	32G4	BM	24C8	EBM	32H4															EBM	I2C7	1
COIL		32F7		40D8		24A7		32D7		29G3		40E8		I2B6		38A0		24E7		24B7		40F6		I2C6	COIL

DRAWING ISSUE

35D	ROZ PJS RHP	HW
36B	ROZ PJS LDJ	
38D	ROZ PJS DJ	
39B	ROZ PJS LDJ	

ISSUE 5B

LINE, LINK, AND MARKER CIRCUIT (2)

BELL TELEPHONE LABORATORIES INCORPORATED — 6S

SD-65741-01-C13

SD-65741-01-C13

CIRCUIT NOTES:

101.

DESIG	FUSE AMP	POTENTIAL	ONE PER
A	1-1/3	48V SIG	APP FIG. 4
B	1-1/3	48V SIG	APP FIG. 4
C	1-1/3	48V SIG	APP FIG. 7
D	1-1/3	48V SIG	APP FIG. 7
E	1-1/3	48V SIG	APP FIG. 8
F	1-1/3	48V SIG	APP FIG. 8
G	1-1/3	48V SIG	APP FIG. 9 (MD), 22
H	1-1/3	48V SIG	APP FIG. 9 (MD), 22
J	1-1/3	48V SIG	APP FIG. 9 (MD), 22
K	1-1/3	48V SIG	APP FIG. 9 (MD), 22
L	1-1/3	48V SIG	APP FIG. 10
L2	1-1/3	48V TALK	APP FIG. 1, 3, 4, 17
L3	1-1/3	48V TALK	APP FIG. 1, 3, 4
L4	1-1/3	48V TALK	APP FIG. 2, 3, 4, 15
L5	1-1/3	48V TALK	APP FIG. 2, 3, 4, 15
L6	1-1/3	48V TALK	APP FIG. 2, 3, 4, 16
L7	1-1/3	48V TALK	APP FIG. 2, 3, 4, 16
M	1-1/3	48V SIG	APP FIG. 10
N	1-1/3	48V SIG	APP FIG. 5
P	1-1/3	48V SIG	APP FIG. 5
Q	1-1/3	48V SIG	APP FIG. 11
R	1-1/3	48V SIG	APP FIG. 3, 4
S	1-1/3	48V SIG	APP FIG. 9 (MD), 13, 22
SO	1-1/3	48V SIG	APP FIG. 12
SI	1-1/3	48V SIG	APP FIG. 12
S23	1-1/3	48V SIG	APP FIG. 12
S45	1-1/3	48V SIG	APP FIG. 12
S67	1-1/3	48V SIG	APP FIG. 12
S89	1-1/3	48V SIG	APP FIG. 12
T	1-1/3	48V SIG	APP FIG. 11
TO	1-1/3	48V SIG	APP FIG. 4, 6, 16
TI	1-1/3	48V SIG	APP FIG. 4, 6, 16
TR	1-1/3	48V SIG	TRAFFIC REG CKT
UA	1-1/3	48V SIG	APP FIG. 7
UB	1-1/3	48V SIG	APP FIG. 7
X	1-1/3	48V SIG	APP FIG. 7
Y	1-1/3	48V SIG	APP FIG. 7
Z	1-1/3	48V SIG	APP FIG 19, 20, 21,
DSS	3/4	+ 48V SIG	APP FIG. 8

BATTERY SYMBOL	VOLTAGE RANGE
-48	45-52V
+48	45-52.6V

102.

FEATURE OR OPTION			APP FIG.	PROVIDE: APP OR WIRING	QUANTITY
INWARD RESTRICTION CIRCUIT	NOT REQUIRED			XO	
	REQD	WITH BUSY VERIF CKT		XP, XR	
		WITHOUT BUSY VERIF CKT		XP, XQ	
TO CONTROL SWITCH PAD OF DIAL REPEATING CODE 3 TIE TRUNKS (SEE NOTES 123 & 201)			19	SEE NOTE 123	1 PER PBX
			20		1 PER TRK
			21		1 PER 2 TRKS

102. (CONT)

FEATURE OR OPTION			APP FIG.	PROVIDE: APP OR WIRING	QUANTITY
LINE AND MARKER TENS GROUP EQPT FOR LINE GROUPS	20-29 AND 30-39		1, 17		1 PER PBX
	40-49 AND 50-59		2		1 PER PBX
	WHEN ARR FOR 60 LINES	60-69 AND 70-79		V, E, VJ	
MESSAGE REGISTER PULSE CKT	REQUIRED SEE NOTE 125			WV	1 PER PBX
	NOT REQUIRED			WU	1 PER PBX
MARKER PREFERENCE AND TENS SELECTION			4		1 PER PBX
	WHEN ARR FOR 60 LINES			V	
MARKER REGISTER CONTROL			5		1 PER PBX
MARKER TRUNK CONNECTOR			6		1 PER PBX
MARKER UNITS SELECTION, LINE AND TRUNK HUNTING, JUNCTOR REGISTRATION AND, SEQUENCE CONTROL			7		1 PER PBX
MARKER ROUTE CONTROL CLASS OF SERVICE, AND DOWN CHECK			8		1 PER PBX
MARKER LINK TEST CONTROL, SELECT MAGNET CONTROL (INCL SEL MAG CONN RELS ASSOC WITH SWITCHES 2 & 3), AND MISC CONTROL			22	WT	1 PER PBX
MARKER ADVANCE, TIMEOUT, & RELEASE			10		1 PER PBX
MARKER ALARM			11		1 PER PBX
LINE AND TRUNK LINK SWITCHES	TRUNK SWITCHES 0 & 8				
	WHEN ARR FOR 60 LINES	LINE SW 6 AND 7	12	ZY	1 PER PBX
	TRUNK SWITCH 1 AND LINE SWITCHES 4 AND 5		13		1 PER PBX
	LINE SWITCHES 2 AND 3		14		1 PER PBX
MARKER SELECT MAGNET CONNECTOR RELAYS	ASSOCIATED WITH SWITCHES 1, 4 AND 5		15		1 PER PBX
	ASSOC WITH SW 0 AND 8		16		
	WHEN ARR FOR 60 LINES	ASSOC WITH SW 6 & 7		V	1 PER PBX
TO ARRANGE LINES IN LINE GRP 20-29 FOR (SEE NOTE 133)	STATION LINE			M, ZD, WP, VC, VE	
	LOUDSPEAKER PAGING TRK			ZD, ZS, WP, VC, VE	
	RECORDED TEL DICTATION TRK	WITHOUT CORD SWBD		ZD, ZF, WP, VC, VE	
		WITH CORD SWBD		ZD, ZF, WP, VC, VF	
	3A CODE CALL CKT	CALLING END		ZD, ZG, WP, VC, VE	
		ANS END		ZE, WP, VC, VE	
	INTERFACE TRK CKT	CALLING END		ZD, ZG, WP, VC, VE	
		ANS END		ZE, WP, VC, VE	
		WITHOUT ANS END		ZD, N, WP, VC, VE	
	TWO-WAY DIAL REPEATING TIE TRK WITH DEL DIAL SIGNAL	SEE NOTE 127 & 202 REQ'D		ZD, ZF, WQ, VD, VE	
		NOT REQ'D		ZD, ZF, WQ, VC, VE	
	AUXILIARY POSITION CKT FOR REMOTE TRUNK ANS SEE NOTE 114			ZD, ZF, WP, VC, VE	
	DIAL CONFERENCE TRK CKT	ATND CONTROLLED SEE NOTE 116		ZD, XC, WP, VC, VE	
		STA CONT. SEE NOTE 115 PORT 0		ZD, ZF, WP, VC, VE	
		PORT 1-4		ZD, WP, VC, VE	
		PORT 5		ZD, XD, WP, VC, VE	
		556A CORD SWBD		WN	
		608A OR 608D CORD SWBD		XY	
	AUTOMATIC TRUNK LEVEL INTERCONNECTING UNIT			ZD, ZS, WP, VC, VE	
STA DL TR CONTROLLER CKT SEE NOTE 113	REQUIRED			YV	
	NOT REQUIRED			YW	
BUSY VERIFICATION AUXILIARY TRUNK CIRCUIT	REQUIRED			YT	
	NOT REQUIRED			YS	

102. (CONT)

FEATURE OR OPTION			APP FIG.	PROVIDE: APP OR WIRING	QUANTITY
LINE HUNTING	TWO DIRECTIONS			X	
	ONE DIRECTION			ZR	
PBX CAPACITY	40 LINES			T	
	60 LINES			V	
MESSAGE WAITING (SEE SERVICE NOTE 124)	REQUIRED			ZQ	
	NOT REQUIRED			ZP	
CORD SWITCH-BOARD	REQD	556A	3	Y, ZT	1 PER PBX
		608A OR D 40 LINES		VA, VZ	
		608A OR D 60 LINES		VA, VB, VZ	
	NOT REQUIRED			Z	
WHEN LONG DISTANCE SERVICE USES C.O. TRUNK CIRCUIT	NO. 9			YE	
	NO. 8			YF	
	NO. 7			YO	
	NO. 6			YP	
STATION SINGLE DIGIT DIALING - MAKE BUSY KEY AND LAMP FOR LINES 20, 30, 40, 50, 60, 70				YD	AS REQUIRED
WHEN FX OR OFF-PREMISE EXTENSION TOUCH-TONE CONVERSION USING AUXILIARY LONG LINE CIRCUIT	SEE NOTE 321	REQUIRED		WI	
		NOT REQUIRED		WH	
WHEN CAMP-ON NOT REQUIRED				WJ	
STATION LINES SEE NOTE 323	30, 31 AND 32			R	
	40, 41 AND 42			VX	
	33-39, 43-79			VY	
STATION DIAL TRANSFER TRK CKT WITH ADD-ON CONF (SEE NOTES 113 & 134)				YX	
INWARD RESTRICTION SEE NOTE 118, 319	REQ			XP	
	NOT REQ			XO	
DELAYED DIALING SEE NOTE 127, 202	REQ			VD	
	NOT REQ			VC	
UNIVERSAL LINES 84 TO 89 ARRANGED FOR OUTGOING TRUNK SERVICE				ZF AND WP OR WQ	1 PER TRUNK

WORKING LIMITS:

MAX EXT CKT LOOP RES	1.5K OHMS
MIN INS RES	10K OHMS

103.

NETWORK VALUES		
NETWORK NO.	RESISTANCE IN OHMS	CAPACITANCE IN UF
1	120	0.35
2	470	0.13
3	150	0.3

DRAWING ISSUE

SUPERCEDES SS 29B HW
300 RJK PJS GFH
310 FMC PJS RHP
320 EWE SAK RHP
330 FED PJS RHP
350 FED PJS RHP
368 ROZ PJS LDJ
378 ROZ PJS LDJ
388 ROZ PJS LDJ
LOST DWG RE-PRODUCED WITHOUT CHANGE 5-21-58 ROZ LDJ
438 44AC

ISSUE 53D

LINE, LINK, AND MARKER CIRCUIT

SD-65741-01-DIA

BELL TELEPHONE LABORATORIES INCORPORATED

DWG SIZE 6S

PRINTED IN U.S.A.

CIRCUIT NOTES: (CONT)

104.

RECORD OF APP FIGURES, WIRING AND APPARATUS CHANGES							
CHANGED ON ISS	IF JOB RECORDS DO NOT SPECIFY	THIS OPTION WAS FURN	SEE NOTE	USE IN CIRCUIT			
				STD	A&M	MD	
5D	G OR K	K		G		K	
	E OR F	F AND V OR NONE	105	E		F	
8B	A OR B	B		A		B	
9B	ZA	NONE	106	ZA			
11B	ZB, ZC, ZD, ZE, ZF OR ZG	ZB, ZD, AND H, M, N, OR Q	102	ZC, ZD, ZE, ZF, ZG, H, M, N		ZB, Q	
			102	FIG. 17			
	ZH, ZI	ZH		ZI		ZH	
12B	ZJ OR ZK	ZJ		ZK		ZJ	
	ZL OR ZM	ZL		ZM		ZL	
	ZN OR ZO	ZN		ZO		ZN	
	ZR	W, X, OR NONE	102	ZR, X		W	
	ZS	ZF, ZG, H, N, OR NONE	102	ZS		H	
13D	ZP OR ZQ	ZP	102	ZP, ZQ			
	ZT	Y OR NONE	102, 107	Y, ZT			
16B	ZV, ZW, ZX, ZY, ZZ OR YA	ZV AND ZZ OR ZV, ZW, ZZ AND V	108, 109	ZX, ZY, YA		ZV, ZW, ZZ	
	YB OR YC	YB		YC		YB	
	YD	ZE OR M	102	YD			
	YE OR YF	NONE	102	YE, YF			
	YG	NONE	102	YG			
17B	YH, YJ	YH	124	YJ		YH	
19B	YK OR YL	YK		YL		YK	
	YM	NONE		YM			
20AC	YN	NONE	110	YN			
21B			111				
22AC	YR	YQ, YN	112	YR		YQ, YN	
23D	YS OR YT	YS	102	YS, YT			
	YV, YX YW	YW	113	YV, YX YW			
	XA, XB	XB		XA		XB	
	XC	NONE	116	XC			
	XD, XE	XE	115	XD, XE			
	XF	NONE	114	XF			
	YO, YP	NONE	102, 117	YO, YP			
24D	XG, XH	XG		XH		XG	
	XJ, XK	XJ OR NONE	102	XJ, XK			
25D	XO, XP XQ, XR	XO	118	XO, XP XQ, XR			
26AC	XU, XV	XU		XV		XU	
27D	Y, ZT XW, XX	Y, ZT	102, 119, 120	Y, ZT XW, XX			
	XY	NONE	102	XY			
29B	WA, XZ	XZ	121, 122	WA		XZ	
	WB, WC	WB		WC		WB	
	WD	NONE		WD			
30D	WE, WF	WE	123	WF		WE	
	FIG. 19, 20 & 21	NONE	102, 123	FIG. 19 20821			
	WG	NONE		WG			
	WH, WI	WH	102, 321	WH, WI			
	WJ	NONE	102	WJ			
31B			124	YH			
	WK	WK	123	WK			
	WL, WM	WL, YR		WM		YR, WL	
32D	WN	NONE	102	WN			
	WP, WQ	WP	102	WP, WQ			
	WR	NONE		WR			

104. (CONT)

RECORD OF APP FIGURES, WIRING AND APPARATUS CHANGES							
CHANGED ON ISS	IF JOB RECORDS DO NOT SPECIFY	THIS OPTION WAS FURN	SEE NOTE	USE IN CIRCUIT			
				STD	A&M	MD	
33D		WC, XH, ZO				WC, XH ZO	
	FIG. 22, WS, WT	FIG. 9, WS		FIG. 22, WT		FIG. 9, WS	
	WU	XJ	102	WU		XJ	
	WV	XK	102, 125	WV		XK	
36B	WW	WX		WX		WW	
	WZ	WY		WZ		WY	
37B	VA	XW	102	VA		XW	
	VB	XX	102	VB		XX	
	VC, VD	VC	102, 202	VC, VD			
	VE, VF	VE	102, 203	VE, VF			
	YG	YG	126			YG	
	VG OR VH	VG		VH		VG	
	VI OR VJ	VI AND V OR NONE	102, 128	VJ		VI	
	VK	YM		VK		YM	
39B	VL OR VM	VL AND NONE OR VL AND WD		VM		WD, VL	
40D	VN	NONE	130	VN			
	VO, VP	VO	129	VP		VO	
41B	VQ OR VR	A, VQ		VR		A, VQ	
	VS	YL		VS		YL	
42B	VT OR VU	VT		VU		VT	
43B	VV OR VW	VV		VW		VV	
	VX, VY	S, VY	323	VX, VY		S	
44AC	VZ	NONE	102	VZ			
45D	UA	NONE		UA			
46D	UB OR UC	UB	133	UB	UC		
	UD				UD		
	UE				UE		
	UF				UF		
	UG				UG		
	UH				UH		
49A				VV		VW	
50B	UI	XV		UI		XV	
51B	UJ OR UK	UJ		UK		UJ	
53D	UL	YX OR NONE	134		UL		

NOTES:

105. PRIOR TO ISSUE 5D "F" OPTION WAS PART OF "V" OPTION.
106. WHEN THE PBX IS MODIFIED FOR DC KEY PULSING "ZA" OPTION MUST BE PROVIDED.
107. PRIOR TO ISSUE 13D "ZT" OPTION WAS PART OF "Y" OPTION.
108. PRIOR TO ISSUE 16B "ZW" OPTION WAS PART OF "V" OPTION.
109. WHEN THE PBX IS MODIFIED FOR DIRECT STATION SELECTION BY ATTENDANTS, "ZA" AND "ZX" OPTIONS MUST BE PROVIDED IN A 40 LINE CAPACITY PBX AND "ZA", "ZX" & "ZY" OPTIONS IN A 60 LINE PBX.
110. PROVIDE "YN" OPTION WHEN "YC" OPTION IS PROVIDED. (MD)
111. OPTIONS "YO" AND "YP" WERE ORIGINALLY SHOWN ADDED ON ISSUE 19B & 21B, SEE NOTE 117.
112. PROVIDE "YR" OPTION WHERE "YC" OPTION IS PROVIDED AND REMOVE "YQ" AND "YN" OPTIONS.
113. WHEN THE PBX IS MODIFIED FOR THE STATION DIAL TRANSFER TRUNK CIRCUIT WITH ADD-ON CONFERENCE. OPTIONS "YV" & "YX" MUST BE PROVIDED REPLACING "YW". OPTION "XA" MUST ALSO BE PROVIDED REPLACING "XB."
114. WHEN THE PBX IS MODIFIED TO PROVIDE AN AUXILIARY POSITION CIRCUIT FOR REMOTE TRUNK ANSWERING, OPTION "XF" MUST BE PROVIDED.
115. WHEN THE PBX IS MODIFIED TO PROVIDE FOR STATION CONTROLLED DIAL CONFERENCE TRUNK CIRCUIT, OPTION "XD" MUST BE PROVIDED REPLACING "XE." OPTION "XA" MUST BE PROVIDED REPLACING "XB."
116. WHEN THE PBX IS MODIFIED TO PROVIDE FOR ATTENDANT CONTROLLED DIAL CONFERENCE TRUNK, OPTION "XC" MUST BE PROVIDED. OPTION "XA" MUST BE PROVIDED REPLACING "XB".
117. OPTIONS "YO" AND "YP" WERE ORIGINALLY SHOWN ADDED ON ISSUE 19B. THESE OPTIONS WERE RESCHEDULED FOR ISSUE 21B AND SUBSEQUENTLY FOR 23D.
118. WHEN PBX IS MODIFIED TO PROVIDE AN INWARD RESTRICTION CIRCUIT, OPTION "XP" MUST BE PROVIDED, REPLACING OPTION "XO". OPTION "XQ" ALSO MUST BE PROVIDED. IF THE BUSY VERIFICATION CIRCUIT IS ALSO PROVIDED, OPTION "XR" MUST BE PROVIDED, REPLACING OPTION "XQ".
119. ON ISSUE 27D, "ZU" OPTION BECAME PART OF 552A, 552B, 552D, 552E, 605A, 607A, 607B, OR 608A JACK CIRCUIT AND WAS REMOVED FROM THE DRAWING ON A "D" NO RECORD BASIS.
120. PRIOR TO ISSUE 27D, OPTIONS "XW" & "XX" WERE PART OF OPTION "Y"
121. PRIOR TO ISSUE 29B, OPTION "XZ" WAS A PART OF OPTION "XA".
122. PROVIDE OPTION "WA" WHEN OPTION "XA" IS PROVIDED.
123. FOR CONTROL OF SWITCH PAD IN CODE 8 TIE TRUNKS ON ALL CODE 8 TO CODE 8 CALLS AS WELL AS ALL CODE 8 TO CODE 9 CALLS AND CODE 9 TO CODE 8 CALLS, MARKER OPTIONS 19, 20, 21, WF, AND WK AND DIAL PULSE REGISTER CIRCUIT OPTIONS YQ AND XC MUST BE PROVIDED. FOR CODE 8 TRUNK PAD CONTROL ONLY ON CODE 8 TO CODE 8 CALLS, MARKER OPTIONS 19, 20, 21, AND WF, AND REGISTER OPTIONS YQ AND XD MUST BE PROVIDED.
124. WHEN A LINE IN LINE GROUP 20-29 IS USED AS A STATION LINE AND MESSAGE WAITING SERVICE IS PROVIDED ON THIS STATION LINE, THE INSTALLER SHALL REMOVE OPTION "YJ" AND ADD OPTION "YH" FOR THIS LINE. ON ISSUE 31D OPTION "YH" IS REINSTATED AS STANDARD.
125. WHEN THE MESSAGE REGISTER PULSE CIRCUIT IS TO BE ADDED TO A PBX AND THE MARKER IS EQUIPPED WITH APP. FIG. 9 AND WS OPTIONS (PRIOR TO ISSUE 33) THEN OPTION XK MUST BE SPECIFIED INSTEAD OF OPTION WV, THE STATION MESSAGE REGISTER PULSE AND SURCHARGE CKT MUST HAVE OPTION T SPECIFIED INSTEAD OF OPTION S AND SD-65746-01 MUST HAVE OPTION ZF SPECIFIED INSTEAD OPTION ZG.
126. USE OF DIAL CONFERENCE CIRCUIT SD-65745-01 IS RATED (MD) AND THE CONFERENCE CIRCUIT IS RATED A & M. WHEN THIS CONFERENCE CIRCUIT IS ADDED TO AN EXISTING PBX, THE FOLLOWING OPTIONS ARE NEEDED: N, ZD, YG, WP, VC, VE. PRIOR TO ISSUE 37B, OPTION YG WAS RATED STANDARD FOR USE WHEN THIS DIAL CONFERENCE WAS PROVIDED.
127. DELAY DIAL SIGNALING MAY ONLY BE PROVIDED WITH SD-65718-02, ISSUE 5B OR LATER.
128. PRIOR TO ISS 37B, "VI" OPTION WAS PART OF "V" OPTION.
129. PRIOR TO ISSUE 40D, "VC" OPTION WAS PART OF "WT" OPTION.
130. WHEN THE TMS FEATURE IS TO BE ADDED TO A PBX AND THE MARKER IS EQUIPPED WITH APP. FIG. 9 AND WS OPTIONS (PRIOR TO ISSUE 33D) CONNECT LEADS TU (L02- L09) AND TU (L12- L19) TO THE ASSOCIATED LEADS S02-S09 AND S12-S19 RESPECTIVELY.
131. IT IS SUGGESTED THAT ONE WAY OUTGOING TRUNK TO CENTRAL OFFICE PER SD-5E001-01 BE USED.
132. OPTIONS UB THRU UH ARE FOR LOCAL APPLICATION AND ARE NOT FOR MANUFACTURING PURPOSES.

133. (A&M ONLY)

FEATURE OR OPTION			PROVIDE		
			APP FIG.	APP OR WIRING	QUANTITY
MODIFICATION FOR LOCAL APPLICATION TO ADD FROM 1 TO 6 OUTGOING CENTRAL OFFICE TRUNK CKTS WITH TOLL ALLOWED SERVICE SEE NOTES 131, 132, 324, 325 AND 326	BASIC SWITCHING ARRANGEMENT INCLUDING OUTGOING TRUNK NO. 11			UC	1 PER PBX
	ADDITIONAL OUTGOING TRUNK NO.	12		UD	1 PER TRUNK
		13		UE	
		14		UF	
		15		UG	
		16		UH	
UNIVERSAL LINES 84 TO 89 ARRANGED FOR OUTGOING TRUNK SERVICE				ZF AND WP OR WQ	1 PER TRUNK

134. WHEN OPTION UL (BASIC SWITCHING ARRANGEMENT FOR THE ADDITION OF 1-6 OUTGOING 1 WAY CONTROL OFFICE TRUNKS) IS FURNISHED AND STATION DIAL TRANSFER IS PROVIDED, REMOVE OPTION YX AND ADD OPTION UL.

DRAWING ISSUE	
36B	ROU PUS LDN
37B	ROU PUS LDN
39B	ROU PUS LDN
40D	
41B	
42B	
43B	
44AC	
45D	

HW

ISSUE 53D

LINE, LINK, AND MARKER CIRCUIT

SD-65741-01-D1B

BELL TELEPHONE LABORATORIES INCORPORATED

SIZE 6S

PRINTED IN U.S.A.

INFORMATION NOTES:

301.

	SWITCH	VERTICAL	TENS RELAY	UNITS RELAY	TRUNK GROUP RELAY	CLASS OF SERVICE	DIALED NUMBER (SEE NOTE B)	HUNTING GROUP (SEE NOTE A)	REMARKS
LINE 20	2	0	T2	U0			20		
LINE 21	2	1	T2	U1			21		
LINE 22	2	2	T2	U2			22		
LINE 23	2	3	T2	U3			23		
LINE 24	2	4	T2	U4			24		
LINE 25	2	5	T2	U5			25		
LINE 26	2	6	T2	U6			26		
LINE 27	2	7	T2	U7			27		
LINE 28	2	8	T2	U8			28		
LINE 29	2	9	T2	U9			29		
LINE 30	3	0	T3	U0			30		
LINE 31	3	1	T3	U1			31		
LINE 32	3	2	T3	U2			32		
LINE 33	3	3	T3	U3			33		
LINE 34	3	4	T3	U4			34		
LINE 35	3	5	T3	U5			35		
LINE 36	3	6	T3	U6			36		
LINE 37	3	7	T3	U7			37		
LINE 38	3	8	T3	U8			38		
LINE 39	3	9	T3	U9			39		
LINE 40	4	0	T4	U0			40		
LINE 41	4	1	T4	U1			41		
LINE 42	4	2	T4	U2			42		
LINE 43	4	3	T4	U3			43		
LINE 44	4	4	T4	U4			44		
LINE 45	4	5	T4	U5			45		
LINE 46	4	6	T4	U6			46		
LINE 47	4	7	T4	U7			47		
LINE 48	4	8	T4	U8			48		
LINE 49	4	9	T4	U9			49		
LINE 50	5	0	T5	U0			50		
LINE 51	5	1	T5	U1			51		
LINE 52	5	2	T5	U2			52		
LINE 53	5	3	T5	U3			53		
LINE 54	5	4	T5	U4			54		
LINE 55	5	5	T5	U5			55		
LINE 56	5	6	T5	U6			56		
LINE 57	5	7	T5	U7			57		
LINE 58	5	8	T5	U8			58		
LINE 59	5	9	T5	U9			59		
LINE 60	6	0	T6	U0			60		
LINE 61	6	1	T6	U1			61		
LINE 62	6	2	T6	U2			62		
LINE 63	6	3	T6	U3			63		
LINE 64	6	4	T6	U4			64		
LINE 65	6	5	T6	U5			65		
LINE 66	6	6	T6	U6			66		
LINE 67	6	7	T6	U7			67		
LINE 68	6	8	T6	U8			68		
LINE 69	6	9	T6	U9			69		
LINE 70	7	0	T7	U0			70		
LINE 71	7	1	T7	U1			71		
LINE 72	7	2	T7	U2			72		
LINE 73	7	3	T7	U3			73		
LINE 74	7	4	T7	U4			74		
LINE 75	7	5	T7	U5			75		
LINE 76	7	6	T7	U6			76		
LINE 77	7	7	T7	U7			77		
LINE 78	7	8	T7	U8			78		
LINE 79	7	9	T7	U9			79		

	SWITCH	VERTICAL	TENS RELAY	UNITS RELAY	TRUNK GROUP RELAY	CLASS OF SERVICE	DIALED NUMBER (SEE NOTE B)	HUNTING GROUP (SEE NOTE A)	REMARKS
ATT TRK 0	8	0		U0	TK0		00		INTERCEPT
ATT TRK 0	8	0	TR1	U0‖U5	TK0		05		ATT
ATT TRK 1	0	5		U1	TK0		01		INTERCEPT
ATT TRK 1	0	5	TR0	U5‖U6	TK0		06		ATT
ATT TRK 2	0	6		U2	TK0		02		INTERCEPT
ATT TRK 2	0	6	TR0	U6‖U7	TK0		07		ATT
MISC TRK 0	2	0	T2	U0	TK8		80		
MISC TRK 1	2	1	T2	U1	TK8		81		
MISC TRK 2	2	2	T2	U2	TK8		82		NOTE 314
MISC TRK 3	2	3	T2	U3	TK8		83		NOTE 314
MISC TRK 4	2	4	T2	U4	TK8		84		
MISC TRK 5	2	5	T2	U5	TK8		85		
MISC TRK 6	2	6	T2	U6	TK8		86		NOTE 314
MISC TRK 7	2	7	T2	U7	TK8		87		NOTE 314
MISC TRK 8	2	8	T2	U8	TK8		88		
MISC TRK 9	2	9	T2	U9	TK8		89		
REGISTER 0	0	8	R0		RG				WORK
REGISTER 0	0	9	R0		RG				MEMORY
REGISTER 1	1	8	R1		RG				WORK
REGISTER 1	1	9	R1		RG				MEMORY
JUNCTOR 0	1	0			JT				ORIG
JUNCTOR 0	1	1			JT				TERM
JUNCTOR 1	1	2			JT				ORIG
JUNCTOR 1	1	3			JT				TERM
JUNCTOR 2	1	4			JT				ORIG
JUNCTOR 2	1	5			JT				TERM
JUNCTOR 3	8	1			JT				ORIG
JUNCTOR 3	8	2			JT				TERM
JUNCTOR 4	8	3			JT				ORIG
JUNCTOR 4	8	4			JT				TERM
JUNCTOR 5	1	6			JT				ORIG
JUNCTOR 5	1	7			JT				TERM
CO TRK 0	0	0	TRM1	U9	TK9	COT	99		
CO TRK 1	0	1	TRM1	U8	TK9	COT	98		
CO TRK 2	0	2	TRM1	U7	TK9	COT	97		
CO OR RD T TRK 3	0	3	TRM1	U6	TK9	COT	96		NOTE 312
CO OR RD T TRK 4	0	4	TRM1	U5	TK9	COT	95		NOTE 312
CO TRK 5	8	5	TRM0	U4	TK9	COT	94		
CO TRK 6	8	6	TRM0	U3	TK9	COT	93		
CO TRK 7	8	7	TRM0	U2	TK9	COT	92		
CO OR RD T TRK 8	8	8	TRM0	U1	TK9	COT	91		NOTE 312
CO OR RD T TRK 9	8	9	TRM0	U0	TK9	COT	90		NOTE 312
BUSY TONE TRK	0	7		U0	BTC				

NOTE A: THE HUNTING GROUP COLUMN IS PROVIDED TO RECORD THE HUNTING GROUP ASSIGNMENTS AND THE HUNTING PATTERN WITHIN EACH GROUP. THE FOLLOWING ILLUSTRATES A SUGGESTED METHOD OF RECORDING THE HUNTING INFORMATION FOR SOME OF THE EXAMPLES USED IN NOTE 302.

	HUNTING GROUP
LINE 40	
LINE 41	
LINE 42	
LINE 43	
LINE 44	
LINE 45	
LINE 46	
LINE 47	
LINE 48	
LINE 49	

B. DIALED NUMBERS FOR TRUNKS ARE SHOWN FOR MAINTENANCE INFORMATION. THE ATT TRUNKS ARE REACHED BY DIALING ONLY THE TENS DIGIT ZERO. WHERE RD T TRUNKS ARE NOT PROVIDED AND ONLY ONE GROUP OF CENTRAL OFFICE TRUNKS ARE PROVIDED, THE CENTRAL OFFICE TRUNKS ARE REACHED BY DIALING ONLY THE TENS DIGIT NINE. LINE CIRCUITS IN THE 20-29 GROUP WHICH ARE ASSIGNED TO THE 3A CODE CALL CKT (CALLING END), LOUD SPEAKER PAGING TRUNK, DIAL CONFERENCE CKT, RECORDED TELEPHONE DICTATION TRUNK, OR A TWO WAY TIE TRUNK ARE REACHED BY DIALING THE CORRESPONDING 80-89 NUMBER. LINE CIRCUITS IN THIS GROUP WHICH ARE ASSIGNED TO THE 3A CODE CALL CIRCUIT (ANSWERING END) OR STATIONS ARE REACHED BY DIALING THE 20-29 NUMBER.

302. TWO WAY, ONE WAY, OR COMBINATIONS OF TWO WAY AND ONE WAY HUNTING GROUPS MAY BE FORMED USING ANY NUMBER OF STATIONS WITHIN A TENS GROUP.

(a) A TWO WAY HUNTING GROUP MAY BE FORMED BY PROVIDING X OPTION BETWEEN THE H TERMINALS OF THE STATIONS INCLUDED IN THE GROUP, FOR EXAMPLE:

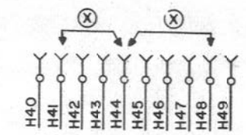

TWO WAY GROUP CONSISTING OF STATIONS 41, 44, AND 48

IF EITHER STATION 41, 44, OR 48 IS DIALED AND FOUND BUSY, MARKER WILL COMPLETE CALL INDISCRIMINATELY TO WHICHEVER OF THE OTHER TWO STATIONS IS IDLE.

(b) A ONE WAY HUNTING GROUP MAY BE FORMED BY PROVIDING ZR OPTION BETWEEN THE H TERMINALS OF THE STATIONS INCLUDED IN THE GROUP WITH THE ARROW ON EACH DIODE POINTING IN THE HUNTING DIRECTION DESIRED, FOR EXAMPLE:

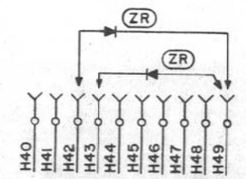

ONE WAY GROUP CONSISTING OF STATIONS 42, 43, AND 49

IF STATION 42 IS DIALED AND FOUND BUSY, MARKER WILL COMPLETE CALL INDISCRIMINATELY TO EITHER STATION 43 OR 49, WHICHEVER IS IDLE. IF STATION 49 IS DIALED AND FOUND BUSY, MARKER WILL COMPLETE CALL TO STATION 43 IF IDLE. IF STATION 43 IS DIALED AND FOUND BUSY, MARKER WILL COMPLETE CALL TO BUSY TONE TRUNK.

(c) A COMBINED HUNTING GROUP MAY BE FORMED BY PROVIDING X AND ZR OPTIONS BETWEEN THE H TERMINALS OF THE STATIONS INCLUDED IN THE GROUP IN ANY COMBINATION REQUIRED TO PRODUCE THE HUNTING PATTERN DESIRED, FOR EXAMPLE:

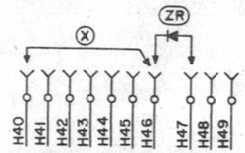

COMBINED GROUP CONSISTING OF STATIONS 40, 46 AND 47

IF STATION 40 IS DIALED AND FOUND BUSY, MARKER WILL COMPLETE CALL TO STATION 46 IF IDLE. IF STATION 46 IS DIALED AND FOUND BUSY, MARKER WILL COMPLETE CALL TO STATION 40 IF IDLE. IF STATION 47 IS DIALED AND FOUND BUSY, MARKER WILL COMPLETE CALL INDISCRIMINATELY TO EITHER STATION 40 OR 46, WHICHEVER IS IDLE.

(d) A ONE WAY SEQUENTIAL HUNTING PATTERN MAY BE PROVIDED IF ALL OF THE STATIONS TO BE INCLUDED IN THE GROUP ARE IN THE SAME SUB-GROUP OF FIVE STATIONS AND THE HUNTING SEQUENCE CONFORMS WITH THE NUMERICAL SEQUENCE OF THE STATION NUMBERS, FOR EXAMPLE:

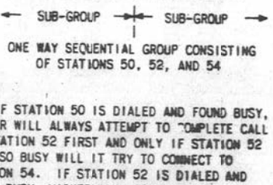

ONE WAY SEQUENTIAL GROUP CONSISTING OF STATIONS 50, 52, AND 54

IF STATION 50 IS DIALED AND FOUND BUSY, MARKER WILL ALWAYS ATTEMPT TO COMPLETE CALL TO STATION 52 FIRST AND ONLY IF STATION 52 IS ALSO BUSY WILL IT TRY TO CONNECT TO STATION 54. IF STATION 52 IS DIALED AND FOUND BUSY, MARKER WILL COMPLETE CALL TO STATION 54 IF IDLE. IF STATION 54 IS DIALED AND FOUND BUSY, MARKER WILL COMPLETE CALL TO BUSY TONE TRUNK.

DRAWING ISSUE	
12B	D.L. WM
16B	W.S. R.P.B.

H0

16

PBX SYSTEMS
NO. 756A
LINE, LINK, AND MARKER CIRCUIT

SD-65741-01-D2

BELL TELEPHONE LABORATORIES INCORPORATED

DWG SIZE 6S

PRINTED IN U.S.A.

303.

SWITCHING PLAN
70 OR 90 VERTICALS

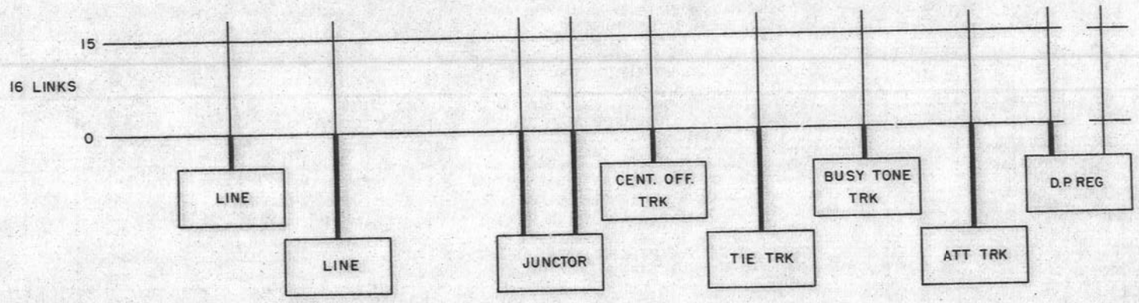

304

DIAL TONE CONNECTION

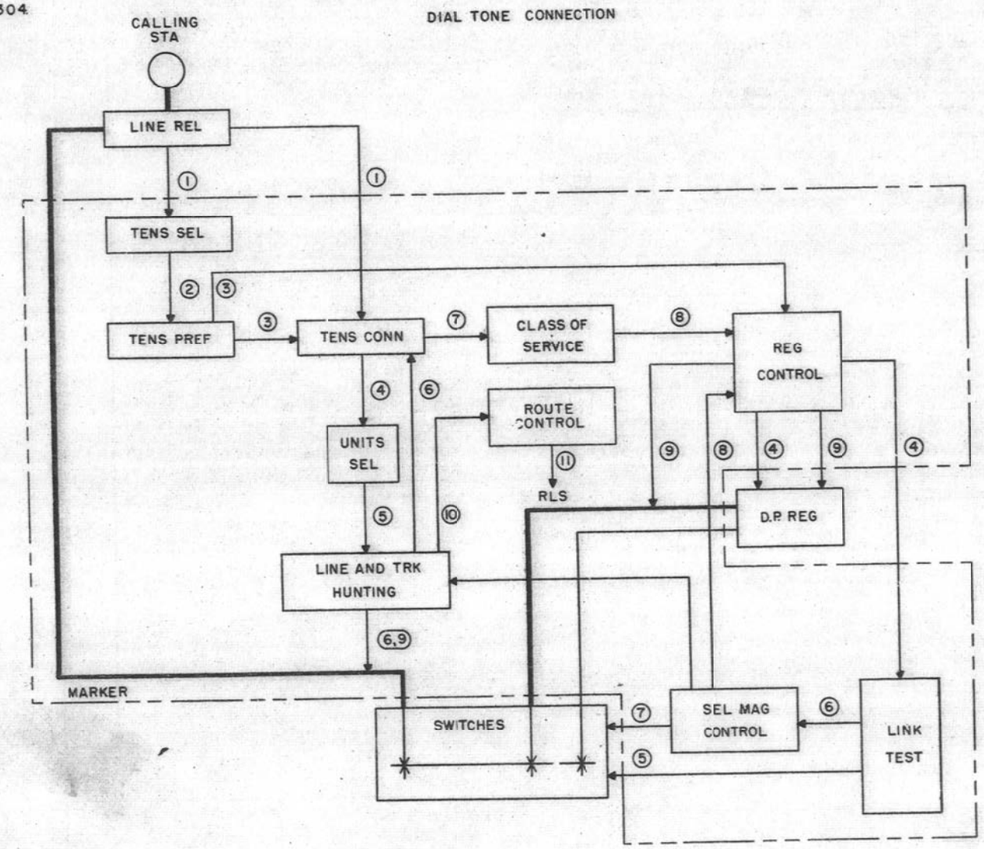

305.

STATION LINE TO STATION LINE
JUNCTOR SELECTION

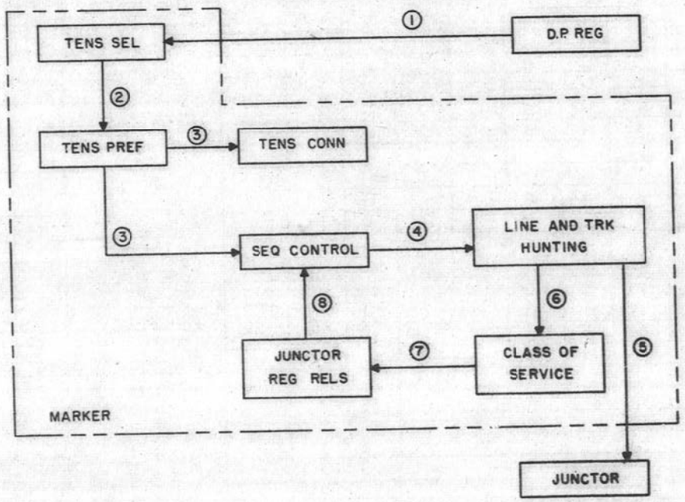

DRAWING ISSUE

1	67 NOV	W.S.

NO. 756A LINE, LINK AND MARKER CIRCUIT	SD-65741-01-D3
BELL TELEPHONE LABORATORIES INCORPORATED	6S

SD-65741-01-D3

306.

STATION LINE TO STATION LINE
CALLED STATION CONNECTED TO JUNCTOR

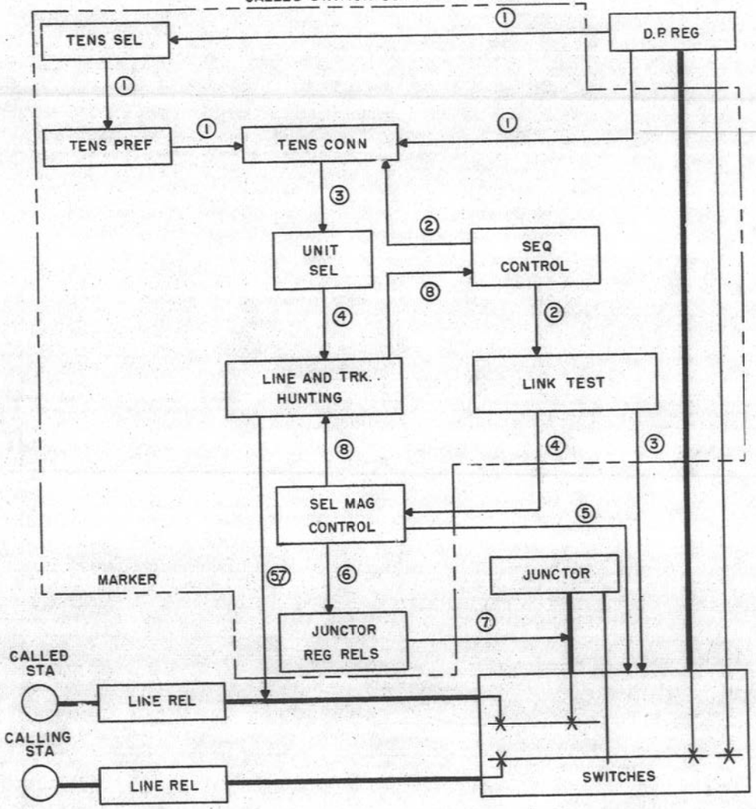

307.

STATION LINE TO STATION LINE
CALLING STATION CONNECTED TO JUNCTOR

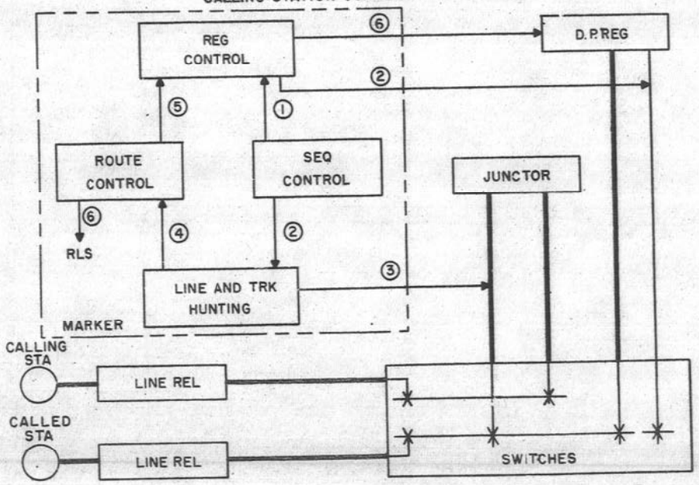

308.

STATION LINE TO TRUNK

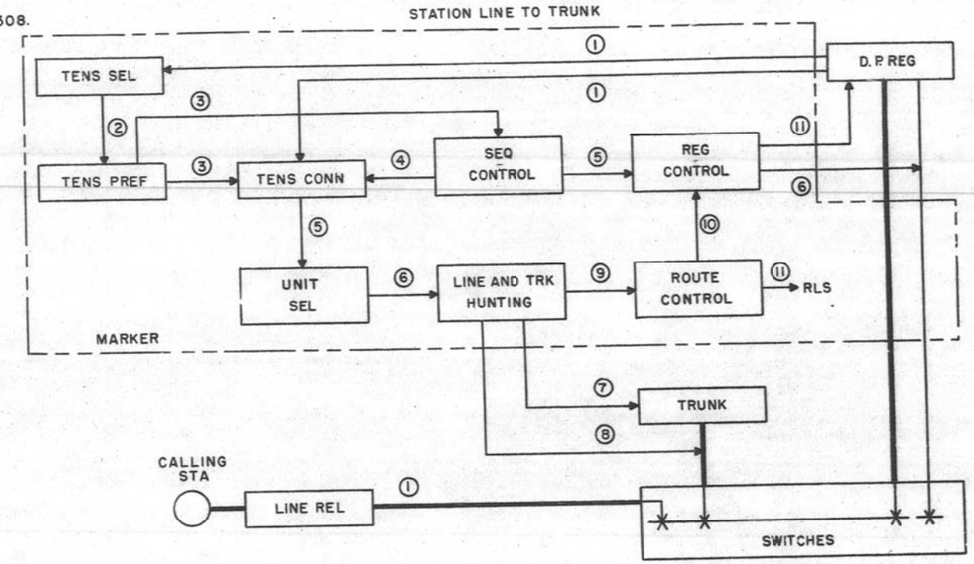

309.

TRUNK TO STATION LINE

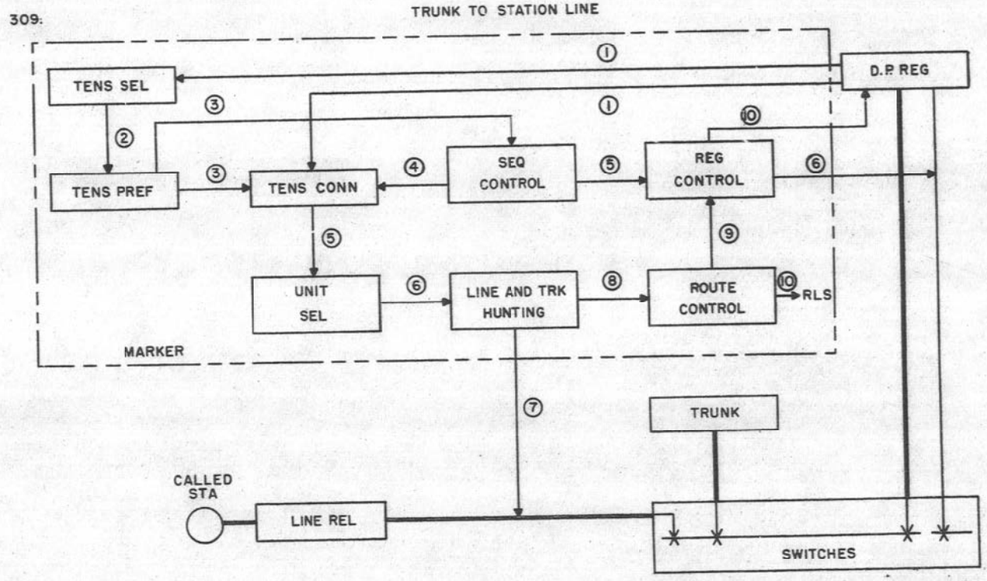

DRAWING ISSUE

1		

NO. 756A
LINE, LINK AND MARKER CIRCUIT (2)

BELL TELEPHONE LABORATORIES INCORPORATED

6S

SD-65741-01-D4

SD-65741-01-D4

INFORMATION NOTES: (CON'

310. THE IT-- LEADS ARE ASSOCIATED WITH THE CENTRAL OFFICE & RINGDOWN TIE TRUNK CIRCUITS IN DIRECT ORDER SUCH THAT IT90 CONNECTS TO TRUNK 0, IT91 TO TRUNK 1, ETC. HOWEVER, THE IT-- LEADS ARE ASSOCIATED WITH THE(S-) RELAYS THROUGH THE(TKS)RELAY IN REVERSE ORDER SUCH THAT IT99 CONNECTS TO(SO).IT98 TO(S1), ETC. THIS IS DONE TO INSURE THAT THE FIRST CHOICE TRUNKS FROM THE PBX TO THE CENTRAL OFFICE ARE NOT ALSO THE FIRST CHOICE TRUNKS FROM THE CENTRAL OFFICE TO THE PBX.

311. WHEN LINE CIRCUITS 20-29 ARE ASSOCIATED WITH TWO WAY TIE TRUNKS, TERMINAL PUNCHINGS CS80-89 ARE USED IN MAKING CLASS OF SERVICE CROSS CONNECTIONS. THIS IS PROVIDED MERELY AS A CROSS CONNECTION WIRING CONVENIENCE. CIRCUIT WISE, TERMINAL PUNCHINGS CS80-89 ARE WIRED DIRECTLY TO TERMINAL PUNCHINGS CS20-29.

312. WHEN PLUG-IN CENTRAL OFFICE OR RINGDOWN TIE TRUNKS ARE NOT PROVIDED, IN CENTRAL OFFICE TRUNK POSITIONS 3,4,8, OR 9, CONNECT GROUND TO THE IT93, IT94, IT98, OR IT99 LEADS CORRESPONDING TO THE UNEQUIPPED POSITIONS.

313. (MFR DISC.) "R" OPTION IS SPECIFIED FOR LINES 30, 31 AND 32 TO PROVIDE FOR AUTOMATICALLY TRANSFERRING THESE STATION LINES TO TWO WAY CENTRAL OFFICE TRUNKS 0, 1 AND 2 RESPECTIVELY WHEN A POWER FAILURE OCCURS. IF THE TWO WAY CENTRAL OFFICE TRUNKS ARE NOT ARRANGED FOR FLEXIBILITY IN SETTING UP NIGHT CONNECTIONS (I.E., FURNISHED PER SD-65752-01, ISSUE 6B OR PRIOR ISSUES), "R" OPTION SHOULD ALSO BE PROVIDED IN LINE 33 AND STATION LINES 30, 31, 32 AND 33 WILL TRANSFER TO TRUNKS 0, 1, 2 AND 5 RESPECTIVELY WHEN EITHER A POWER FAILURE OCCURS OR WHEN THE PBX ATTENDANT OPERATES THE (NIGHT) KEY IN THE CORDLESS POSITION CIRCUIT.

314. WHEN A DIAL CONFERENCE CIRCUIT IS PROVIDED AND ASSIGNED TO TRUNK TERMINALS 80-84, "YG" OPTION SHOULD BE FURNISHED BETWEEN TERMINALS H82 AND H83. IF THE CIRCUIT IS ASSIGNED TO TRUNK TERMINALS 85-89, "YG" OPTION SHOULD BE FURNISHED BETWEEN TERMINALS H87 AND H88. (MANUFACTURED DISCONTINUED)

315. "YT" OPTION IS ASSOCIATED WITH CENTRAL OFFICE TRUNK 0 AND ATTENDANT TRUNK 2 WHEN BUSY VERIFICATION IS PROVIDED.

316. THE STATION DIAL TRANSFER WITH ADD-ON CONFERENCE FEATURE REQUIRES OPTIONS "YX" AND "YV" REPLACING OPTION "YW".

317. WHEN A DIAL CONFERENCE TRUNK CIRCUIT-STATION CONTROLLED IS PROVIDED, ANY SIX TIE TRUNK TERMINALS MAY BE USED AS PORTS OF THE CONFERENCE CIRCUIT. ASSIGNMENT OF A CONSECUTIVE SEQUENCE OF TRUNK TERMINALS IS NOT A REQUIREMENT. THE TRUNK TERMINAL ASSIGNED AS ENTRY PORT TO THE CONFERENCE CONTROL CIRCUIT SHOULD BE GIVEN A RINGDOWN TIE TRUNK (RTT) CLASS OF SERVICE AND THE OTHER FIVE TRUNK TERMINALS SHOULD BE GIVEN A CENTRAL OFFICE TRUNK (COT) CLASS OF SERVICE BY SUITABLE STRAPPING AT THE PBX TERMINAL STRIPS. TRUNK TERMINAL ASSIGNED (COT) CLASS ARE ON A "SERVICE DENIED" BASIS WITH THE EXCEPTION THAT THE TRUNK TERMINAL ASSIGNED TO CONFERENCE PORT 5 MAY BE USED FOR A DIAL BACK CONNECTION BY THE ATTENDANT FOR CONNECTION OF A CENTRAL OFFICE TRUNK.

318. WHEN A DIAL CONFERENCE TRUNK CIRCUIT-ATTENDANT CONTROLLED IS PROVIDED, ANY FIVE TIE TRUNK TERMINALS MAY BE USED AS PORTS OF THE CONFERENCE CIRCUIT. ASSIGNMENT OF A CONSECUTIVE SEQUENCE OF TRUNK TERMINALS IS NOT A REQUIREMENT. THE FIVE TRUNK TERMINALS SHOULD BE GIVEN A CENTRAL OFFICE TRUNK (COT) CLASS OF SERVICE BY SUITABLE STRAPPING AT THE PBX TERMINAL STRIPS AND ARE ON A "SERVICE DENIED" BASIS WITH THE EXCEPTION THAT THE TRUNK TERMINAL ASSIGNED TO CONFERENCE PORT 5 MAY BE USED FOR A DIAL BACK CONNECTION BY THE ATTENDANT FOR CONNECTION OF A CENTRAL OFFICE TRUNK.

319. WHEN AN INWARD RESTRICTION CIRCUIT IS PROVIDED,OPTION XP MUST BE PROVIDED REPLACING OPTION XO, OPTION XQ ALSO MUST BE PROVIDED. IF THE BUSY VERIFICATION CIRCUIT IS ALSO PROVIDED OPTION XR MUST BE PROVIDED REPLACING OPTION XQ. TO RESTRICT A STATION LINE SEE (SD-5E003-01 CROSS CONN. INFORMATION NOTE 401).

320. WHEN THE LONG DISTANCE SERVICE FEATURE USES CENTRAL OFFICE TRUNK CIRCUIT NUMBER 6,7,8 OR 9, CONNECT THE "H" PUNCHINGS FOR THE TRUNKS USED TO PUNCHING H99 TO PLACE THE TRUNKS IN THE SAME HUNTING GROUP.

321. WHEN OPTION WI IS REQUIRED, INSTALLER SHALL CUT STRAP BETWEEN 3 OF THE LINE HOLD MAGNET AND TERMINAL 2 LEVEL 1 OF THE CROSS-BAR SWITCH FOR EACH ASSOCIATED STATION LINE 33 THROUGH 79. STATION LINES 20 THROUGH 32 SHALL BE ENGINEERED LOCALLY.

322. WHEN OFF-PREMISE STATIONS USING REPEATERS ARE SPECIFIED, THESE STATIONS SHOULD BE CONNECTED TO FS26 TO OBTAIN A BALANCED LOOP.

323. "R" OPTION IS SPECIFIED FOR LINES 30, 31 AND 32 TO PROVIDE FOR AUTOMATICALLY TRANSFERRING THESE STATION LINES TO TWO-WAY CENTRAL TRUNKS 0, 1 AND 2 RESPECTIVELY WHEN A POWER FAILURE OCCURS.

"VX" OPTION IS SPECIFIED FOR LINES 40, 41 AND 42 TO PROVIDE FOR AUTOMATICALLY TRANSFERRING THESE STATION LINES TO TWO-WAY CENTRAL OFFICE TRUNKS 5, 6 AND 7 RESPECTIVELY WHEN A POWER FAILURE OCCURS.

324. ADDED TRUNK(S) MUST START IN UNIVERSAL LINE CIRCUIT 89 AND DECEND IN ORDER.

325. THE ADDED TRUNKS MUST BE STRAPPED FOR TWO WAY HUNTING.

326. RELAY ATB, INT, AND IN8 CAN BE MOUNTED IN SLIDE 6, PLATE Z. RELAY AO AND B1 CAN BE MOUNTED IN SLIDE 6, PLATE J.

EQUIPMENT NOTE:

201. BECAUSE OF THE LIMITED AVAILABILITY OF MOUNTING SPACE, WHEN PAD CONTROL IS PROVIDED FOR CODE 8 TIE TRUNKS IT MAY BE NECESSARY TO MOUNT APP. FIGS 19,20 & 21 AND THE TRUNK EXTERNAL TO THE PBX CABINET. CONSEQUENTLY, THE CONTROL LEADS (OPTION WF) FOR THE PAD CONTROL CIRCUIT HAVE BEEN TERMINATED IN THE CROWN OF THE PBX.

202. WHEN OPTION VD IS REQUIRED, INSTALLER SHALL

1. REMOVE
   (a) SURFACE WIRE LEAD ON 2B OF RELAY OT 20-29 COMING FROM IL OF RELAY L20-29
   (b) LOCAL CABLE LEAD ON 3B OF RELAY OT 20-29 COMING FROM I OF LHM 20-29
2. RECONNECT
   (a) SURFACE WIRE LEAD TO 3B OF RELAY OT 20-29
   (b) LOCAL CABLE LEAD TO 2B OF RELAY OT 20-29

203. WHEN OPTION VF IS REQUIRED INSTALLER SHALL REMOVE AND INSULATE SURFACE WIRE LEAD ON 1M OF RELAY OT 20-29 AND ADD A LEAD BETWEEN 5M AND 1M OF RELAY OT 20-29.

DRAWING ISSUE	
12B	RD
16B	JAA
21B	PC
23D	PH
24D	KFJ
25D	GFH
29B	WF
30D	PMA
31D	GFH
37B	RDZ
43B	LDJ

ISSUE 48B

LINE, LINK, AND MARKER CIRCUIT (2)

SD-65741-01-D5

BELL TELEPHONE LABORATORIES INCORPORATED 6S

SD-65741-01-D5

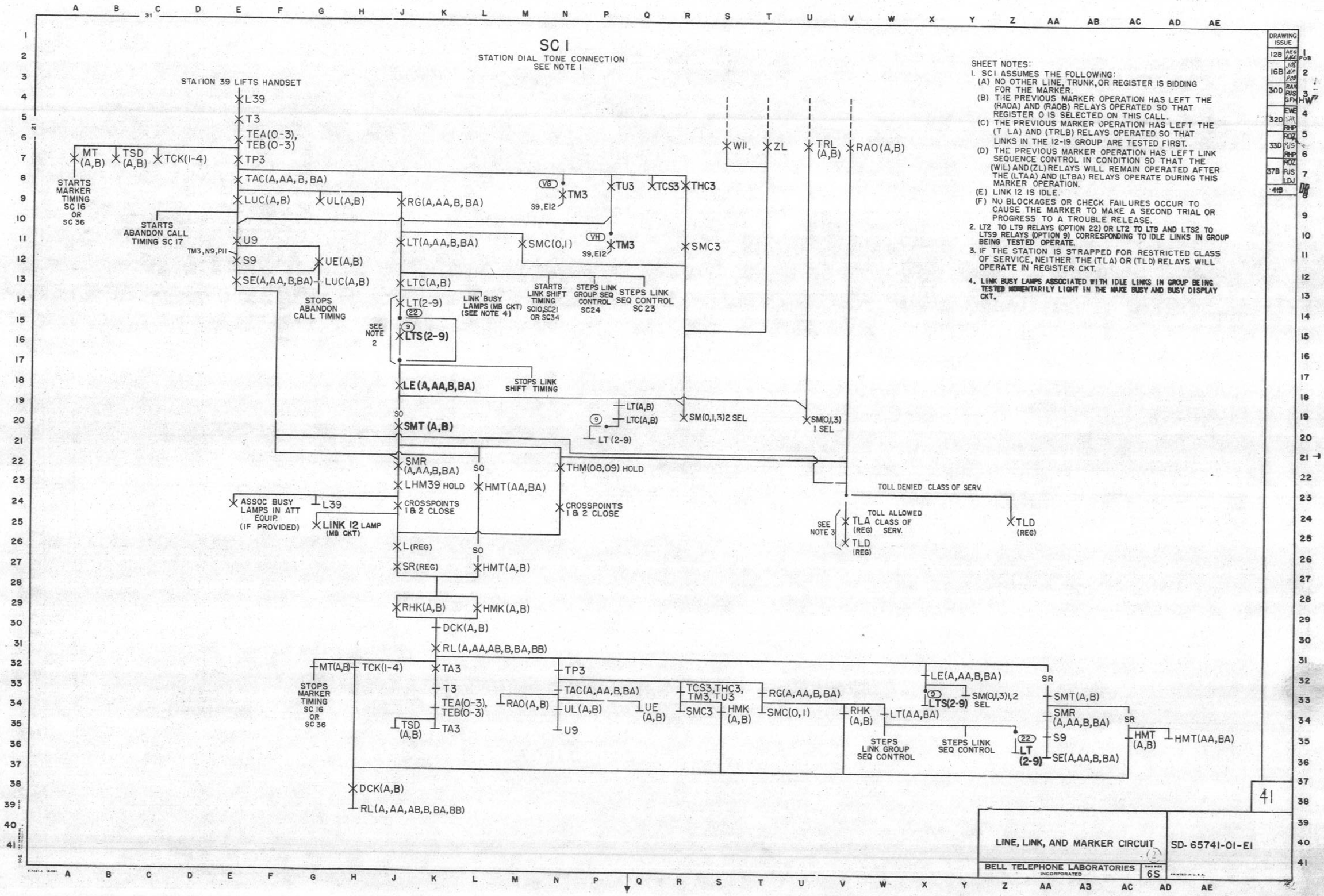

SHEET NOTES:

1. SC1 ASSUMES THE FOLLOWING:
   (A) NO OTHER LINE, TRUNK, OR REGISTER IS BIDDING FOR THE MARKER.
   (B) THE PREVIOUS MARKER OPERATION HAS LEFT THE (RAOA) AND (RAOB) RELAYS OPERATED SO THAT REGISTER O IS SELECTED ON THIS CALL.
   (C) THE PREVIOUS MARKER OPERATION HAS LEFT THE (T LA) AND (TRLB) RELAYS OPERATED SO THAT LINKS IN THE 12-19 GROUP ARE TESTED FIRST.
   (D) THE PREVIOUS MARKER OPERATION HAS LEFT LINK SEQUENCE CONTROL IN CONDITION SO THAT THE (WIL) AND (ZL) RELAYS WILL REMAIN OPERATED AFTER THE (LTAA) AND (LTBA) RELAYS OPERATE DURING THIS MARKER OPERATION.
   (E) LINK 12 IS IDLE.
   (F) NO BLOCKAGES OR CHECK FAILURES OCCUR TO CAUSE THE MARKER TO MAKE A SECOND TRIAL OR PROGRESS TO A TROUBLE RELEASE.
2. LT2 TO LT9 RELAYS (OPTION 22) OR LT2 TO LT9 AND LTS2 TO LTS9 RELAYS (OPTION 9) CORRESPONDING TO IDLE LINKS IN GROUP BEING TESTED OPERATE.
3. IF THE STATION IS STRAPPED FOR RESTRICTED CLASS OF SERVICE, NEITHER THE (TLA) OR (TLD) RELAYS WILL OPERATE IN REGISTER CKT.
4. LINK BUSY LAMPS ASSOCIATED WITH IDLE LINKS IN GROUP BEING TESTED MOMENTARILY LIGHT IN THE MAKE BUSY AND BUSY DISPLAY CKT.

SC 2

CENTRAL OFFICE TRUNK OR RINGDOWN
TIE TRUNK DIAL TONE CONNECTION
SEE NOTE 1

ATTENDANT STEERS INWARD FOR DIAL TONE CONNECTION OVER CENTRAL OFFICE OR RINGDOWN TIE TRUNK 8

SP (CDLS) POS
H (CDLS) POS
ACA (TRK)
HM (TRK)
TRI
TEA(0-3)
TEB(0-3)
MT (A,B) — STARTS MARKER TIMING SC 16 OR SC 36
TSD (A,B)
TCK (1-4)
TRPI
TAC(A,AA,B,BA)
LUC(A,B)
UL(A,B)
RG(A,AA,B,BA)
STARTS ABANDON CALL TIMING SC 17
U8
S8
SE(A,AA,B,BA)
UE(A,B)
LUC(A,B) — STOPS ABANDON CALL TIMING
COT (REG)
SEE NOTE 2
LT(A,AA,B,BA)
LTC(A,B)
LT(2-9) (22)
LTS(2-9) (9)
LINK BUSY LAMPS (MB CKT) (SEE NOTE 3)
STARTS LINK SHIFT TIMING SC10, SC21, OR SC34
STEPS LINK GROUP SEQUENCE CONTROL SC24
STEPS LINK SEQUENCE CONTROL SC 23
LE(A,AA,B,BA)
STOPS LINK SHIFT TIMING
SMT (A,B) SO
LT(A,B)
LTC (A,B)
LT(2-9) (9)
SMR(A,AA,B,BA) SO
THM88 HOLD
CROSSPOINTS 0 & 6 CLOSE
HM(TRK)
HMT(AA,BA)
L(REG) SO
SR(REG)
HMT(A,B)
AC (REG)
LINK 06 LAMP (MB CKT)
SL(TRK)
RHK(A,B)
HMK(A,B)
DCK(A,B)
RL(A,AA,AB,B,BA,BB)
TRCI, TRMI, TRUI
SMCI
SMC(0,8)
WIL
ZL
TRL(A,B)
RAI (A,B)
RAO(A,B)
THM(18,19) HOLD
CROSSPOINTS 0 & 6 CLOSE
SM(0,1,8)6 SEL
SM(0,1,8) 0 SEL

MT(A,B) — STOPS MARKER TIMING SC 16 OR SC 36
TCK(1-4)
TRAI
TRI
TEA(0-3)
TEB(0-3)
TSD(A,B)
TRAI
TRPI
TAC(A,AA,B,BA)
UL(A,B)
UE (A,B)
U8
TRCI, TRMI, TRUI
SMC8
HMK (A,B)
RG(A,AA,B,BA)
SMC (0,1)
RHK(A,B)
LT(AA,BA)
STEPS LINK GROUP SEQUENCE CONTROL
STEPS LINK SEQUENCE CONTROL
LE(A,AA,B,BA)
(9) LTS(2-9)
SM(0,1,8)0,6 SEL
(22) LT(2-9)
SR
SMT(A,B)
SMR(A,AA,B,BA)
S8
SE(A,AA,B,BA)
SR
HMT (A,B)
HMT (AA,BA)
DCK(A,B)
RL (A,AA,AB,B,BA,BB)

SHEET NOTES:

1. SC 2 ASSUMES THE FOLLOWING:
   (A) NO OTHER TRUNK, LINE, OR REGISTER IS BIDDING FOR THE MARKER.
   (B) THE PREVIOUS MARKER OPERATION HAS LEFT THE (RAIA) & (RAIB) RELAYS OPERATED & THE (RAOA) & (RAOB) RELAYS RELEASED SO THAT REGISTER 1 IS SELECTED ON THIS CALL.
   (C) THE PREVIOUS MARKER OPERATION HAS LEFT THE (TRLA) & (TRLB) RELAYS RELEASED SO THAT LINKS IN THE 02-09 GROUP ARE TESTED FIRST.
   (D) THE PREVIOUS MARKER OPERATION HAS LEFT THE LINK SEQUENCE CONTROL IN CONDITION SO THAT THE (ZL) RELAY WILL REMAIN OPERATED AND THE (WIL) RELAY RELEASED AFTER THE (LTAA) & (LTBA) RELAYS OPERATE DURING THIS MARKER OPERATION.
   (E) LINK 06 IS IDLE.
   (F) NO BLOCKAGES OR CHECK FAILURES OCCUR TO CAUSE THE MARKER TO MAKE A SECOND TRIAL OR PROGRESS TO A TROUBLE RELEASE.
2. LT2 TO LT9 RELAYS (OPTION 22) OR LT2 TO LT9 [illegible] TO LTS9 RELAYS (OPTION 9) CORRESPONDING TO [illegible] LINKS IN GROUP BEING TESTED OPERATE.
3. LINK BUSY LAMPS ASSOCIATED WITH IDLE LINKS IN GROUP BEING TESTED MOMENTARILY LIGHT IN THE MAKE BUSY & BUSY DISPLAY CKT.

DRAWING ISSUE
128 RJ PO.8.
168 JOB
32D SNW
33D
37B RJS
41B

41

LINE, LINK, AND MARKER CIRCUIT (2) | SD-65741-01-E2
BELL TELEPHONE LABORATORIES INCORPORATED | 65

SD-65741-01-E2

PART OF SC 3

STATION OR CODE 8 TIE TRUNK TO STATION CONNECTION
SEE NOTE 1

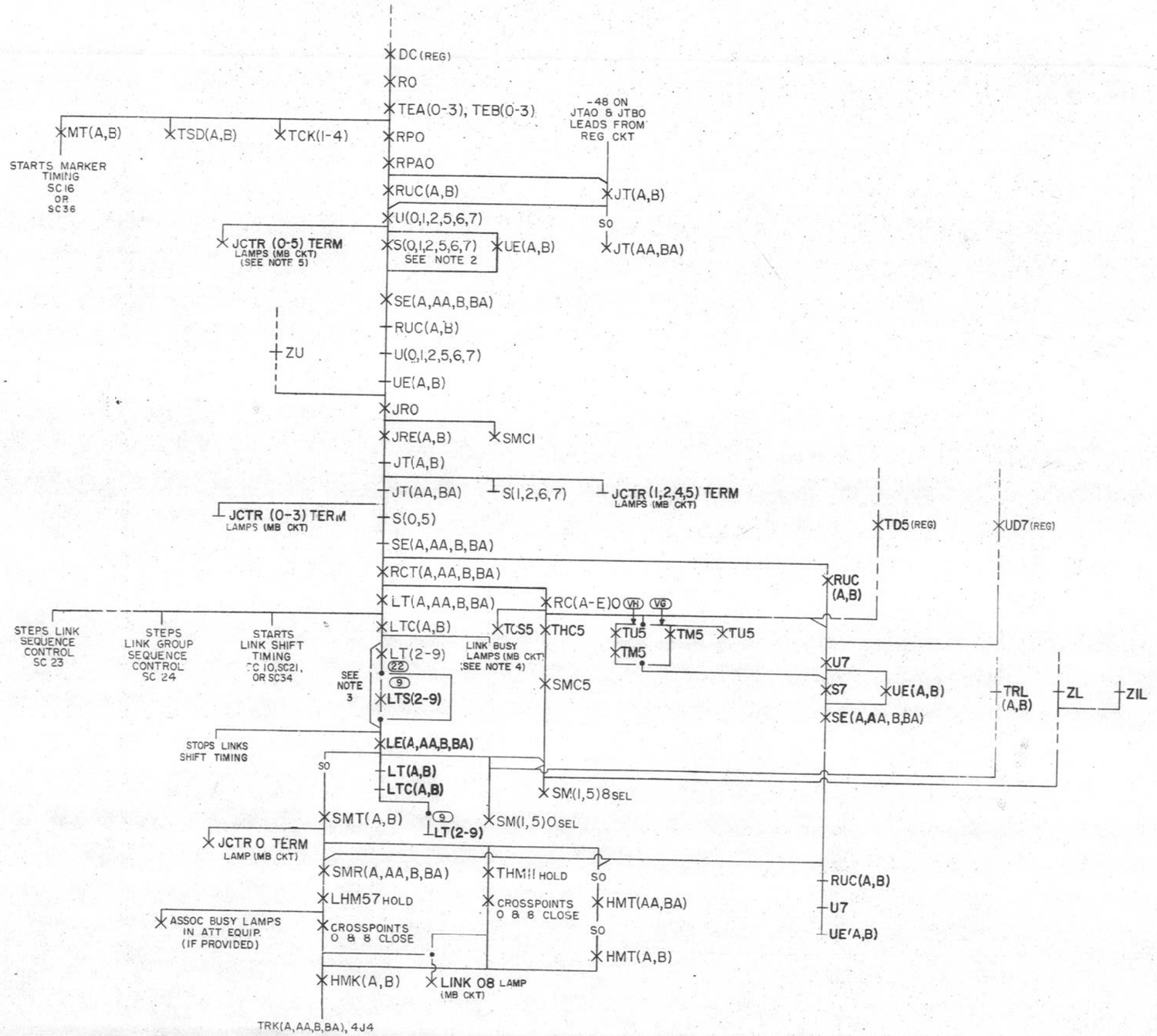

SHEET NOTES:

1. SC 3 ASSUMES THE FOLLOWING:
   (A) NO OTHER REGISTER, LINE, OR TRUNK IS BIDDING FOR THE MARKER.
   (B) THE PREVIOUS MARKER OPERATION HAS LEFT THE (TRLA) AND (TRLB) RELAYS RELEASED SO THAT LINKS IN 02-09 GROUP ARE TESTED FIRST.
   (C) THE PREVIOUS MARKER OPERATION HAS LEFT THE LINK SEQUENCE CONTROL IN CONDITION SO THAT THE (ZL) AND (ZIL) RELAYS WILL BE RELEASED AFTER THE (LTAA) AND (LTBA) RELAYS OPERATE DURING THIS MARKER OPERATION.
   (D) LINK 08 IS IDLE.
   (E) STATION 57 IS IDLE.
   (F) THE PREVIOUS MARKER OPERATION HAS LEFT THE UNITS SEQUENCE ALLOTTER IN CONDITION SO THAT THE (ZU) RELAY IS RELEASED DURING JUNCTOR SELECTION DURING THIS MARKER OPERATION.
   (G) JUNCTOR O IS IDLE.
   (H) LINK 12 WAS USED FOR THE STATION 39 TO REGISTER O DIAL TONE CONNECTION.
   (I) NO BLOCKAGES OR CHECK FAILURES OCCUR TO CAUSE THE MARKER TO MAKE A SECOND TRIAL OR PROGRESS TO A TROUBLE RELEASE.
2. (S0) TO (S2) AND (S5) TO (S7) RELAYS CORRESPONDING TO IDLE JUNCTORS WILL OPERATE.
3. LT2 TO LT9 RELAYS (OPTION 22) OR LTS2 TO LTS9 AND LT2 TO LT9 RELAYS (OPTION 9) CORRESPONDING TO IDLE LINKS IN GROUP BEING TESTED OPERATE.
4. LINK BUSY LAMPS ASSOCIATED WITH IDLE LINKS IN GROUP BEING TESTED MOMENTARILY LIGHT IN THE MAKE BUSY AND BUSY DISPLAY CKT.
5. JCTR TERM BUSY LAMPS ASSOCIATED WITH IDLE JUNCTORS MOMENTARILY LIGHT IN THE MAKE BUSY AND BUSY DISPLAY CIRCUIT.

DRAWING ISSUE

12B	NC LHE	POB.
16B	JJS A. Fea	
30D	RGK PJS GFH	HW
32D	EWE RHP	
33D	ROZ PJS	
	RHP ROZ	
37B	PJS LDJ	
41B		DR

41

SD-65741-01-E3

LINE, LINK, AND MARKER CIRCUIT		SD-65741-01-E3
BELL TELEPHONE LABORATORIES INCORPORATED	SHEET SIZE 6S	

PART OF SC 3

STATION OR CODE 8 TIE TRUNK TO STATION CONNECTION

SHEET NOTES:
1. THE (RAOA) AND (RAOB) RELAYS OPERATE ONLY IF THE (RAIA) AND (RAIB) RELAYS ARE NOT OPERATED AT THE TIME.

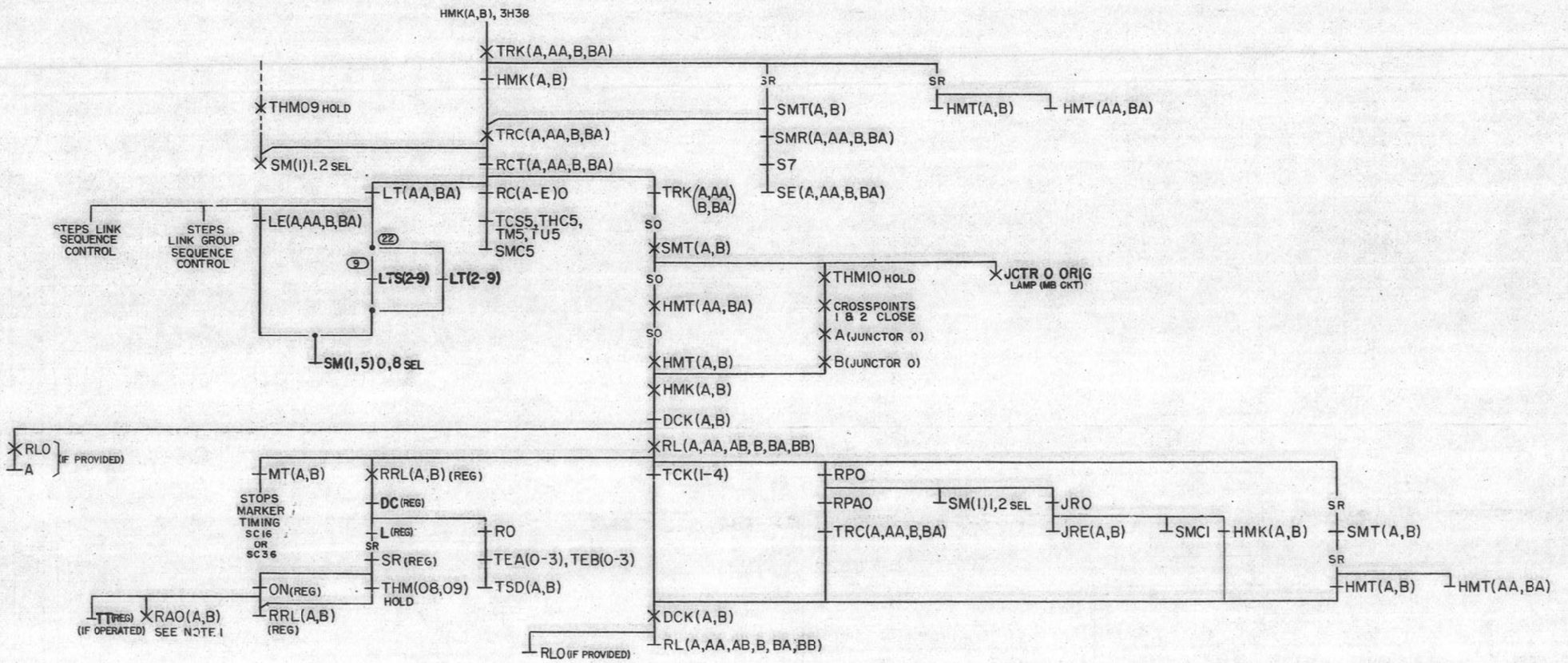

DRAWING ISSUE		
12B	NC	POB
19B	EG WVH PD	HO
30D	EJK PJS GFH	HW
32D	EWE SAK RHP	
33D	ROZ PJS RHP	
41B		

41

LINE, LINK, AND MARKER CIRCUIT (2)

SD-65741-01-E4

BELL TELEPHONE LABORATORIES INCORPORATED

6S

SD-65741-01-E4

SC 4

STATION TO CENTRAL OFFICE
TRUNK CONNECTION
(ONE DIGIT OPERATION)
SEE NOTE 1

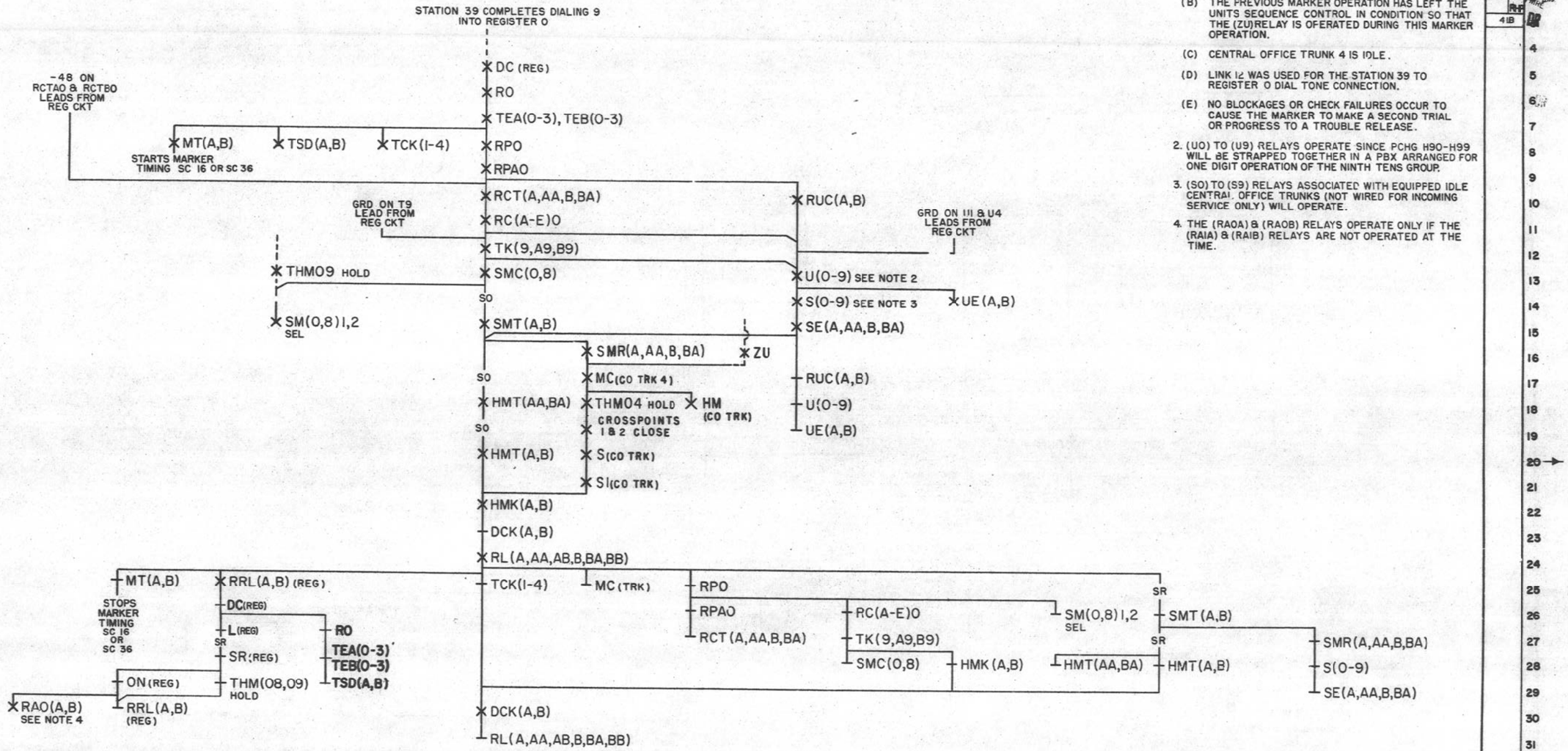

SHEET NOTES:

1. SC 4 ASSUMES THE FOLLOWING:
   - (A) NO OTHER REGISTER, LINE, OR TRUNK IS BIDDING FOR THE MARKER.
   - (B) THE PREVIOUS MARKER OPERATION HAS LEFT THE UNITS SEQUENCE CONTROL IN CONDITION SO THAT THE (ZU) RELAY IS OPERATED DURING THIS MARKER OPERATION.
   - (C) CENTRAL OFFICE TRUNK 4 IS IDLE.
   - (D) LINK 12 WAS USED FOR THE STATION 39 TO REGISTER 0 DIAL TONE CONNECTION.
   - (E) NO BLOCKAGES OR CHECK FAILURES OCCUR TO CAUSE THE MARKER TO MAKE A SECOND TRIAL OR PROGRESS TO A TROUBLE RELEASE.
2. (U0) TO (U9) RELAYS OPERATE SINCE PCHG H90-H99 WILL BE STRAPPED TOGETHER IN A PBX ARRANGED FOR ONE DIGIT OPERATION OF THE NINTH TENS GROUP.
3. (S0) TO (S9) RELAYS ASSOCIATED WITH EQUIPPED IDLE CENTRAL OFFICE TRUNKS (NOT WIRED FOR INCOMING SERVICE ONLY) WILL OPERATE.
4. THE (RA0A) & (RA0B) RELAYS OPERATE ONLY IF THE (RA1A) & (RA1B) RELAYS ARE NOT OPERATED AT THE TIME.

DRAWING ISSUE
12B
21B
33D
41B

41

LINE, LINK, AND MARKER CIRCUIT — SD-65741-01-E5

BELL TELEPHONE LABORATORIES INCORPORATED — 6S

SD-65741-01-E5

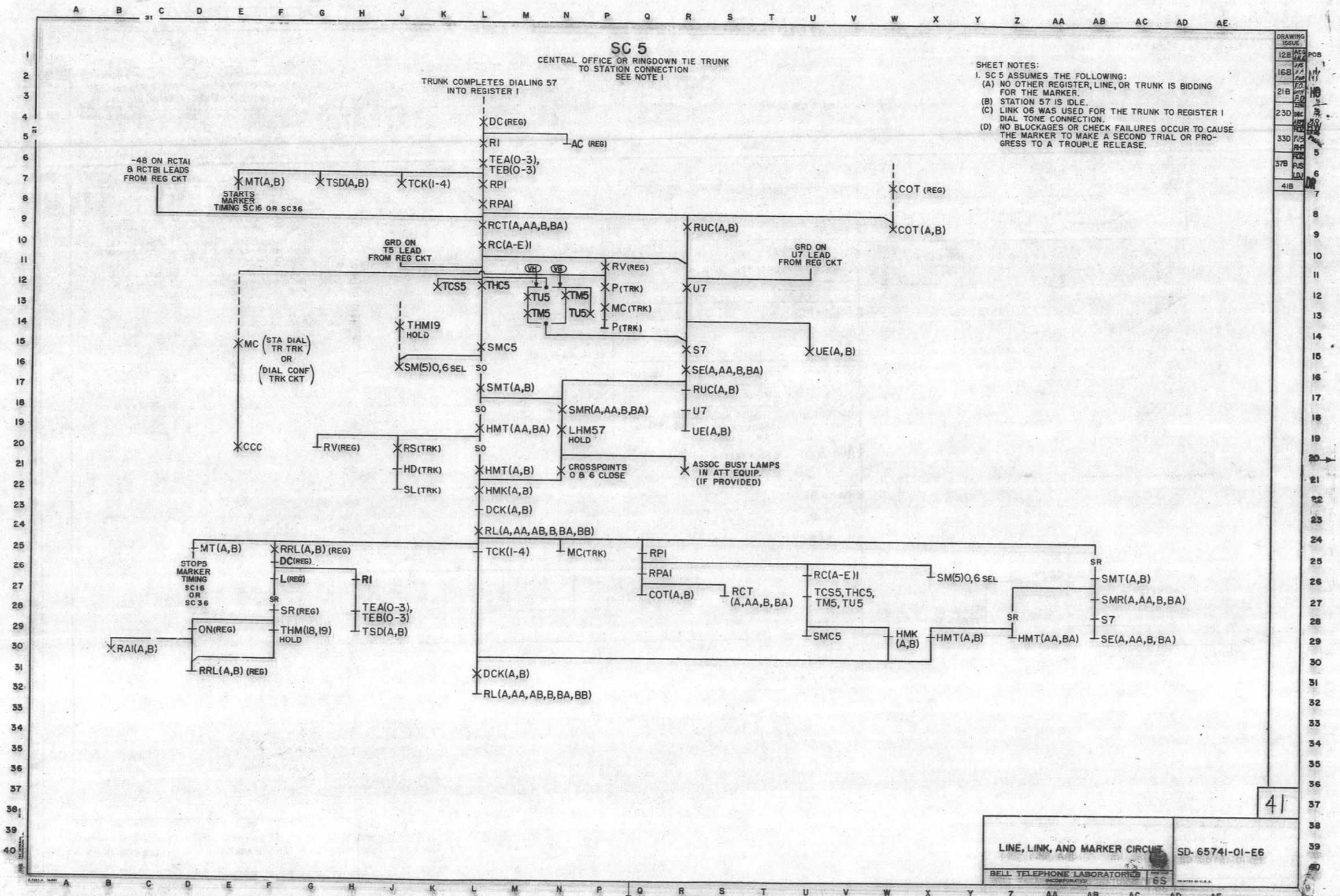

SHEET NOTES:

1. SC 5 ASSUMES THE FOLLOWING:
   (A) NO OTHER REGISTER, LINE, OR TRUNK IS BIDDING FOR THE MARKER.
   (B) STATION 57 IS IDLE.
   (C) LINK 06 WAS USED FOR THE TRUNK TO REGISTER 1 DIAL TONE CONNECTION.
   (D) NO BLOCKAGES OR CHECK FAILURES OCCUR TO CAUSE THE MARKER TO MAKE A SECOND TRIAL OR PROGRESS TO A TROUBLE RELEASE.

SD-65741-01-E6

SC 6

CENTRAL OFFICE OR RINGDOWN TIE TRUNK
TO CODE 8 TRUNK CONNECTION
SEE NOTE 1

SHEET NOTES:

1. SC 6 ASSUMES THE FOLLOWING:
   (A) DIAL TIE TRUNK 83 IS IDLE.
   (B) LINK 06 WAS USED FOR THE TRUNK TO REGISTER DIAL TONE CONNECTION.
   (C) NO BLOCKAGES OR CHECK FAILURES OCCUR TO CAUSE THE MARKER TO MAKE A SECOND TRIAL OR PROGRESS TO A TROUBLE RELEASE.
2. RELAY B ON TIE TRUNK PER SD-65718-01 OR EQUIVALENT RELAY ON SIMILAR TIE TRUNKS.

TRUNK COMPLETES DIALING DIAL TIE TRUNK CODE 83 INTO REGISTER 1

DC (REG)
RI
TEA(0-3), TEB(0-3)
MT(A,B) — STARTS MARKER TIMING SC 16 OR SC 36
TSD(A,B)
TCK(1-4)
RPI
RPA1
-48 ON RCTA1 & RCTB1 LEADS FROM REG CKT
RCT(A,AA,B,BA)
RC(A-E)1
COT (REG)
COT(A,B)
RUC(A,B)
GRD ON T8 LEAD FROM REG CKT
GRD ON U3 LEAD FROM REG CKT
RV (REG)
TK(8,A8,B8)
P (TRK)
MC (TRK)
TT (TRK)
TT (REG)
PC(TRK)
U3
UE(A,B)
(STA DIAL TR TRK OR DIAL CONF TRK CKT) MC
CCC
THM 19 HOLD
SM(0,2)0,6 SOL SO
SMC(0,2)
LINE 83 LAMP (MB CKT)
S3
SE(A,AA,B,BA)
SMT(A,B)
RUC(A,B)
U3
UE(A,B)
SMR(A,AA,B,BA)
OT23
LHM23
SO
ASSOC BUSY LAMP IN ATT EQUIP (IF PROVIDED)
CROSSPOINTS 0&6 CLOSE
TT(REG)
B
MS
(IF PROVIDED)
HMT(AA,BA)
B(TIE TRK) SEE NOTE 2
SL23
GRD ON S2 LEAD
RV(REG)
P(TRK)
HMT(A,B)
A
TDC(TIE TRK)
PO(TIE TRK)
(IF PROVIDED)
HMK(A,B)
DCK(A,B)
RL1 (IF PROVIDED)
RL(A,AA,AB,B,BA,BB)
MARKER RELEASE SIMILAR TO RELEASE ON SC 5

DRAWING ISSUE	
12B	RO
16B	
23D	DRC
30D	
32D	
41B	

P.O.B.

LINE, LINK, AND MARKER CIRCUIT	SD-65741-01-E7
BELL TELEPHONE LABORATORIES INCORPORATED	6S

SD-65741-01-E7

PART OF SC 7

STATION TO STATION CALL TO
BUSY STATION - BUSY TONE TRUNK IDLE - ALL
STATIONS IN HUNTING GROUP ALSO BUSY
SEE NOTE 1

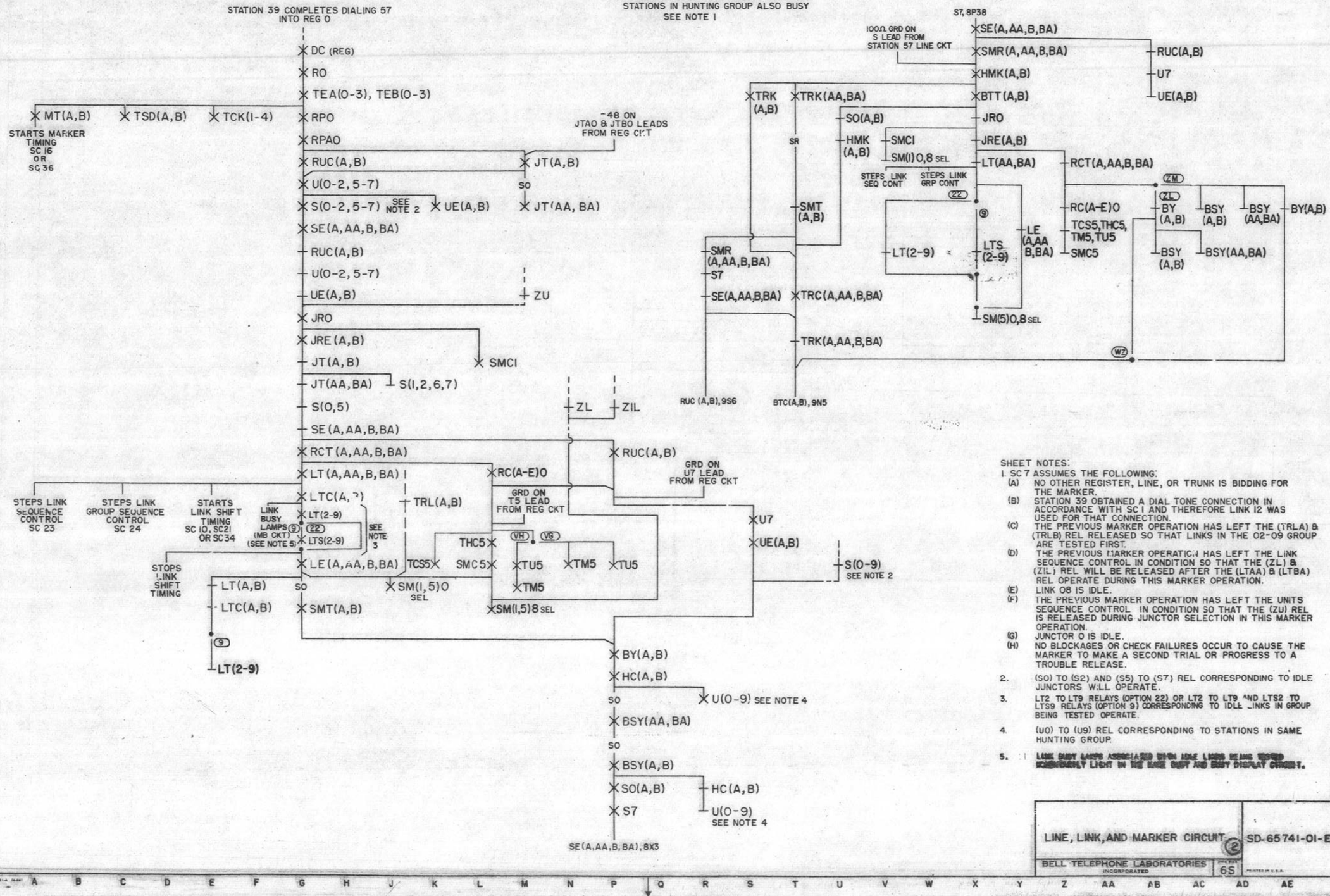

SHEET NOTES:

1. SC 7 ASSUMES THE FOLLOWING:
   - (A) NO OTHER REGISTER, LINE, OR TRUNK IS BIDDING FOR THE MARKER.
   - (B) STATION 39 OBTAINED A DIAL TONE CONNECTION IN ACCORDANCE WITH SC 1 AND THEREFORE LINK 12 WAS USED FOR THAT CONNECTION.
   - (C) THE PREVIOUS MARKER OPERATION HAS LEFT THE (TRLA) & (TRLB) REL RELEASED SO THAT LINKS IN THE 02-09 GROUP ARE TESTED FIRST.
   - (D) THE PREVIOUS MARKER OPERATION HAS LEFT THE LINK SEQUENCE CONTROL IN CONDITION SO THAT THE (ZL) & (ZIL) REL WILL BE RELEASED AFTER THE (LTAA) & (LTBA) REL OPERATE DURING THIS MARKER OPERATION.
   - (E) LINK 08 IS IDLE.
   - (F) THE PREVIOUS MARKER OPERATION HAS LEFT THE UNITS SEQUENCE CONTROL IN CONDITION SO THAT THE (ZU) REL IS RELEASED DURING JUNCTOR SELECTION IN THIS MARKER OPERATION.
   - (G) JUNCTOR 0 IS IDLE.
   - (H) NO BLOCKAGES OR CHECK FAILURES OCCUR TO CAUSE THE MARKER TO MAKE A SECOND TRIAL OR PROGRESS TO A TROUBLE RELEASE.
2. (S0) TO (S2) AND (S5) TO (S7) REL CORRESPONDING TO IDLE JUNCTORS WILL OPERATE.
3. LT2 TO LT9 RELAYS (OPTION 22) OR LT2 TO LT9 AND LTS2 TO LTS9 RELAYS (OPTION 9) CORRESPONDING TO IDLE LINKS IN GROUP BEING TESTED OPERATE.
4. (U0) TO (U9) REL CORRESPONDING TO STATIONS IN SAME HUNTING GROUP.
5. LINK BUSY LAMPS ASSOCIATED WITH IDLE LINKS BEING TESTED SCINTILLATELY LIGHT IN THE MAKE BUSY AND BUSY DISPLAY CIRCUIT.

DRAWING ISSUE

12B	O.L. LAKE	R.O.B.
19B	EG WVH PD	
23D	DHC ARM	
27D	EWE SAK GFH	
29B	WPA GFH	
32D	EWE SAK	
33D	ROZ PJS RHP	
36B	ROZ PJS LDJ	
37B	ROZ PJS LDJ	
41B		

41

LINE, LINK, AND MARKER CIRCUIT (2) SD-65741-01-E8

BELL TELEPHONE LABORATORIES INCORPORATED 6S

SD-65741-01-E8

PART OF SC 7

STATION TO STATION CALL TO
BUSY STATION - BUSY TONE TRUNK IDLE -
ALL STATIONS IN HUNTING GROUP ALSO BUSY

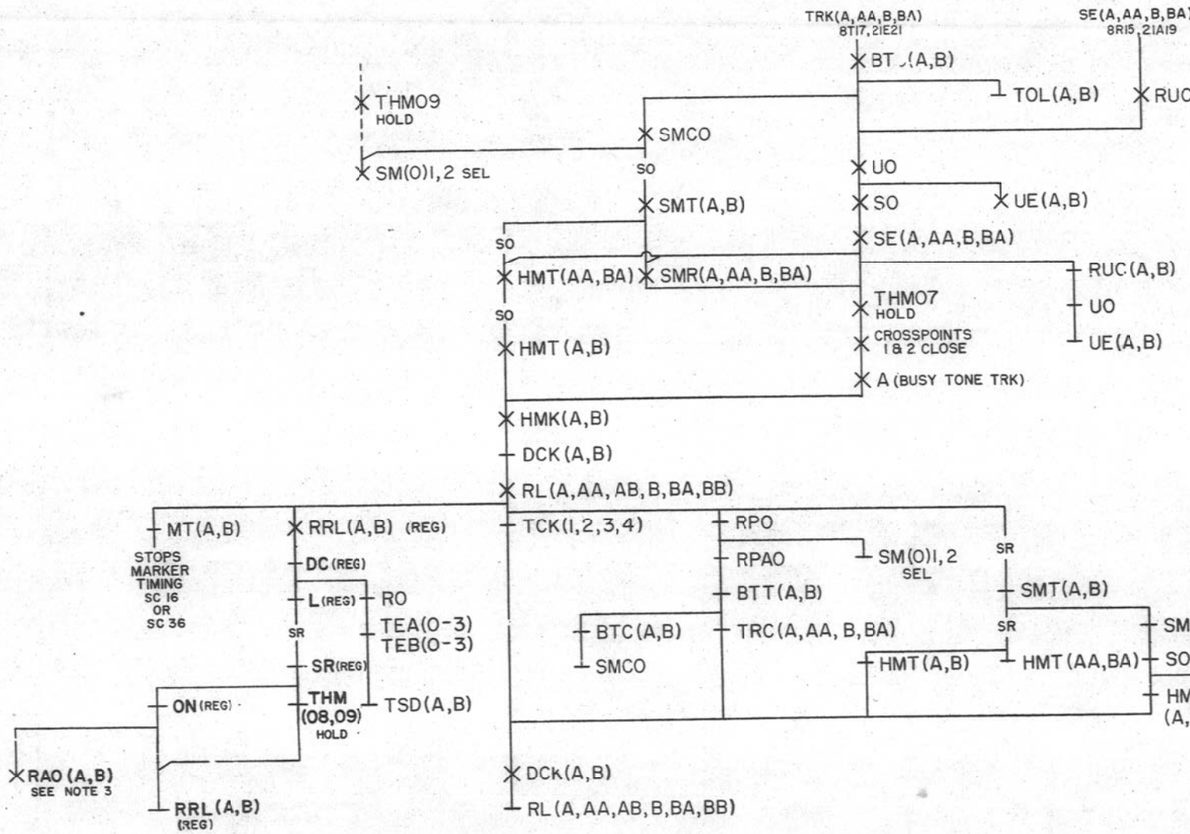

SC 8

STATION TO STATION CALL TO
BUSY STATION - STATION IN HUNTING
GROUP IDLE
SEE NOTE 1

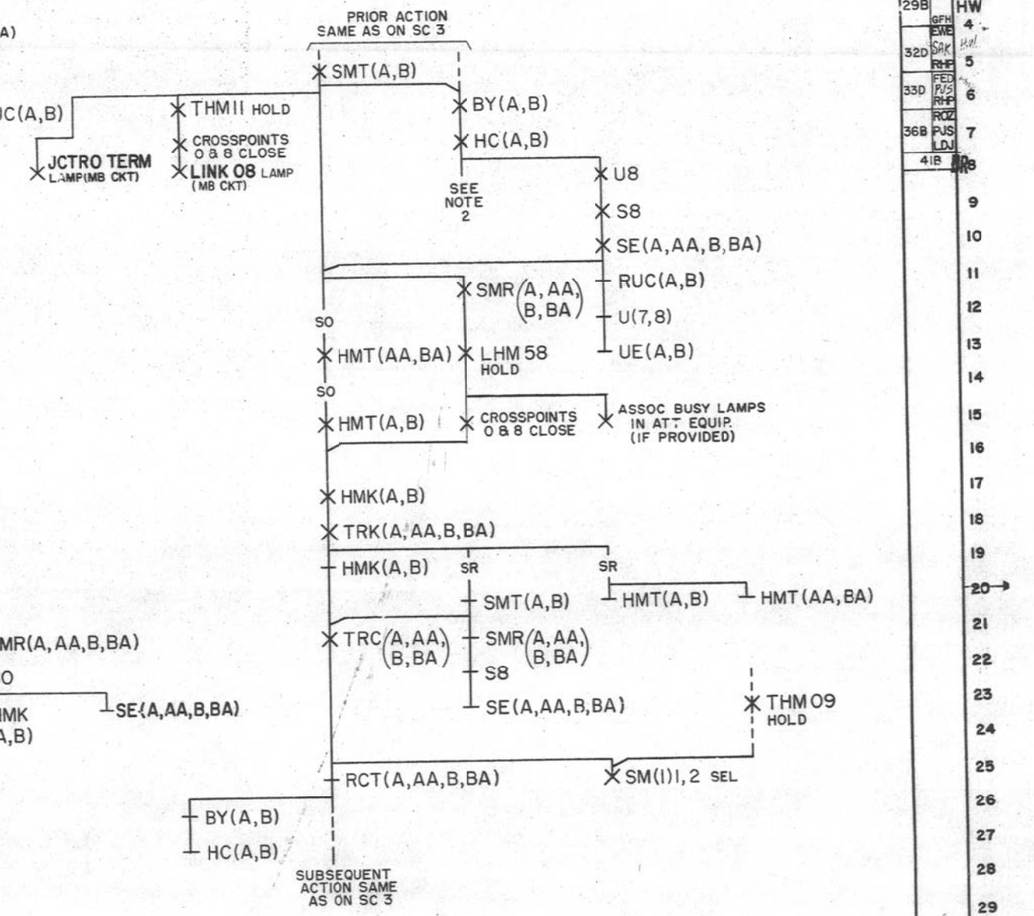

SHEET NOTES:

1. SC 8 ASSUMES THAT STATION 39 COMPLETES DIALING 57 INTO REGIST_R 0 AND THE MARKER ATTEMPTS TO COMPLETE THE CALL AS SHOWN ON SC 3 OR SC 7, BUT STATION 57 IS BUSY AND CALL IS COMPLETED TO THE IDLE STATION 58. IT IS ASSUMED THAT STATION 57 AND 58 ARE IN A TWO WAY HUNTING GROUP OF TWO STATIONS (OR A ONE WAY HUNTING GROUP OF TWO STATIONS ARRANGED TO HUNT FROM 57 TO 58)
2. WHEN (HCA) & (HCB) RELAYS OPERATE THE OPERATE PATHS FOR (BSYAA) & (BSYBA) RELAYS ARE CLOSED BUT THE PATHS ARE OPENED BY THE OPERATION OF THE (S8) RELAY AND THEREFORE THE RELAYS NEVER OPERATE.
3. THE (RAOA) & (RAOB) REL WILL OPERATE ONLY IF THE (RAIA) & (RAIB) REL ARE NOT OPERATED AT THE TIME.

DRAWING ISSUE
12B
16B
23D
29B
32D
33D
36B
41B

41

LINE, LINK, AND MARKER CIRCUIT (2) SD-65741-01-E9

BELL TELEPHONE LABORATORIES INCORPORATED 6S

SD-65741-01-E9

PART OF SC 9

CENTRAL OFFICE OR RINGDOWN TIE
TRUNK CALL TO BUSY STATION –
ALL OTHER STATIONS IN HUNTING GROUP ALSO BUSY –
NO OTHER TRUNK CAMPED ON
SEE NOTE 1

TRUNK 8 COMPLETES DIALING 57 INTO REGISTER 1

DC (REG)
RI
TEA (0-3)
TEB (0-3)
RPI
RPAI
RCT (A,AA,B,BA)
RC (A-E) I
THC5
SMC5
SMT (A,B)
RV (REG)
P (TRK)
MC (TRK)
P (TRK)
TSD (A,B)
MT (A,B)
STARTS MARKER TIMING SC 16 OR SC 36
TCK (1-4)
-48 ON RCTAI & RCTBI LEADS FROM REG CKT
GRD ON T5 LEAD FROM REG CKT
VH
VG
THMI9 HOLD
TCS5
TU5
TM5
TU5
TM5
SO
SM (5) 0,6 SEL
COT (REG)
COT (A,B)
RUC (A,B)
GRD ON U7 LEAD FROM REG CKT
U7
UE (A,B)
BY (A,B)
HC (A,B)
SO
U (0-9) SEE NOTE 2
MC (DIAL CONF TRK CKT)
BSY (AA,BA)
SO
BSY (A,B)
SO (A,B)
HC (A,B)
U (0-9) SEE NOTE 2
CCC
S7
SE (A,AA,B,BA)
100 Ω GRD ON S LEAD FROM STATION 57 LINE CKT
SMR (A,AA,B,BA)
RUC (A,B)
HMK (A,B)
U7
UE (A,B)
CANCEL CAMP-ON SC 26
CON (A,AA,B,BA)
CO (A,AA,B,BA)
LTC (A,B)
TRK (A,AA,B,BA)
SR
SMT (A,B)
SMC (0,8)
SM (5) 0,6 SEL
BY (TRK)
DR (TRK)
SL (TRK)
STEPS LINK GROUP SEQUENCE CONTROL SC 24
STARTS LINK SHIFT TIMING SC 10, SC 21 OR SC 34
Q3 XSTR (VRDA)
LT4
LT4
LTS4
STOPS LINK SHIFT TIMING
LE (A,AA,B,BA)
CON (A,AA,B,BA) IIG8
Q3 XSTR (VRDA)
SM (0,8) 4 SEL
TRL (A,B)
SM (0,8) 0 SEL

SHEET NOTES:

1. SC 9 ASSUMES THE FOLLOWING:
   (A) NO OTHER REGISTER, LINE, OR TRUNK IS BIDDING FOR THE MARKER.
   (B) TRUNK 8 OBTAINED A DIAL TONE CONNECTION IN ACCORDANCE WITH SC 2 AND THEREFORE LINK 06 WAS USED FOR THAT CONNECTION.
   (C) LINK 04 WAS USED FOR EXISTING CONNECTION TO BUSY STATION 57 AND THEREFORE IS USED FOR TRUNK CAMP ON CO. NECTION.
   (D) THE PREVIOUS MARKER OPERATION HAS LEFT THE (TRLA) AND (TRLB) RELAYS RELEASED SO THAT LINKS IN THE 02-09 GROUP ARE TESTED FIRST.
   (E) NO BLOCKAGES OR CHECK FAILURES OCCUR TO CAUSE THE MARKER TO MAKE A SECOND TRIAL OR PROGRESS TO A TROUBLE RELEASE.
2. (U0) TO (U9) RELAYS CORRESPONDING TO STATIONS IN SAME HUNTING GROUP.

DRAWING ISSUE
12B
19B
21B
23D
26AC
29B
33D
37B
41B

41

LINE, LINK, AND MARKER CIRCUIT (2) SD-65741-01-E10

BELL TELEPHONE LABORATORIES INCORPORATED 6S

SD-65741-01-E10

PART OF SC 9

CENTRAL OFFICE OR RINGDOWN TIE
TRUNK CALL TO BUSY STATION—
ALL OTHER STATIONS IN HUNTING GROUP ALSO BUSY—
NO OTHER TRUNK CAMPED ON

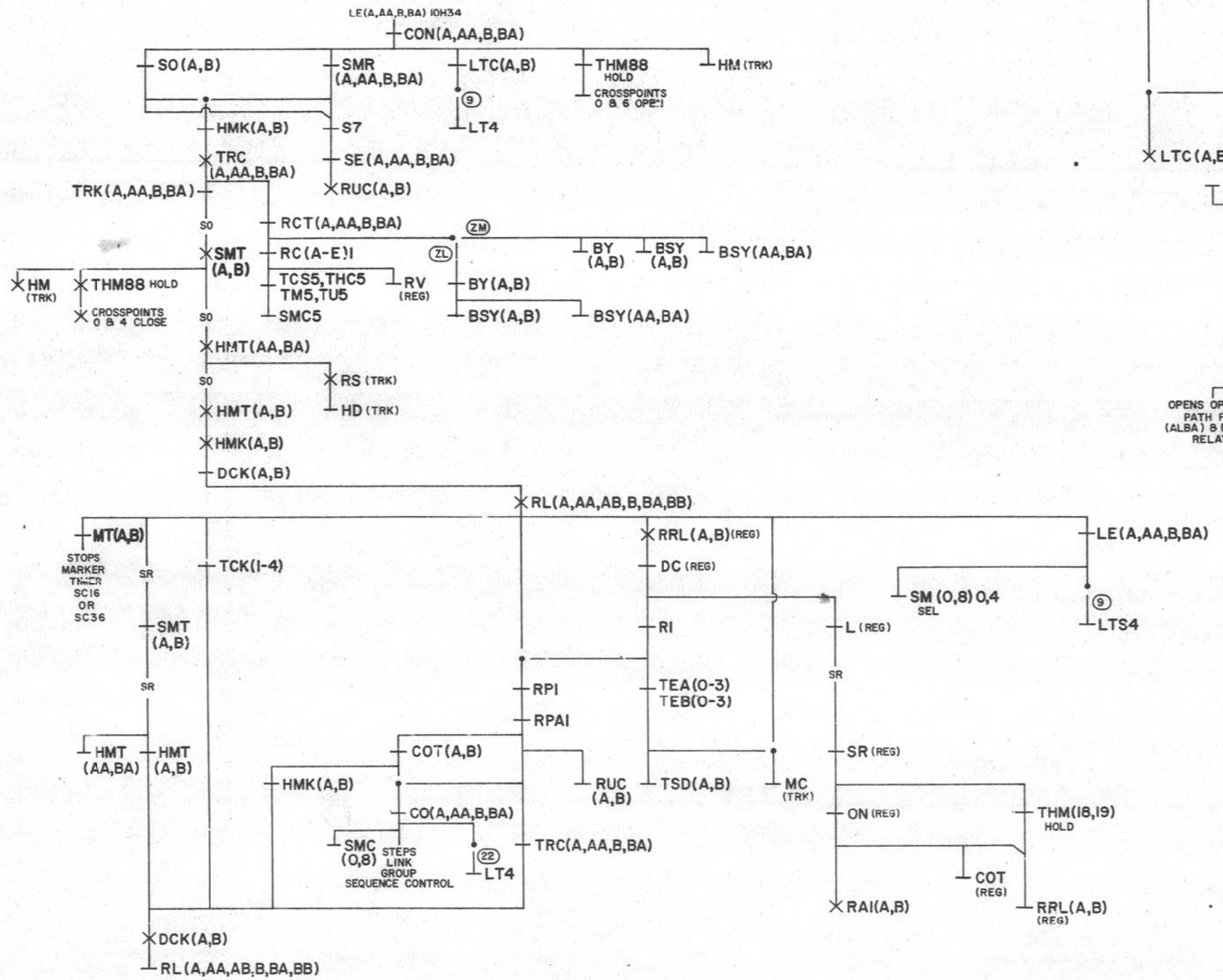

ZN SC 10 (MFR DISC)

LINK SHIFT TIMING
(ALL LINKS BUSY IN FIRST GROUP TESTED SEE NOTE 1)

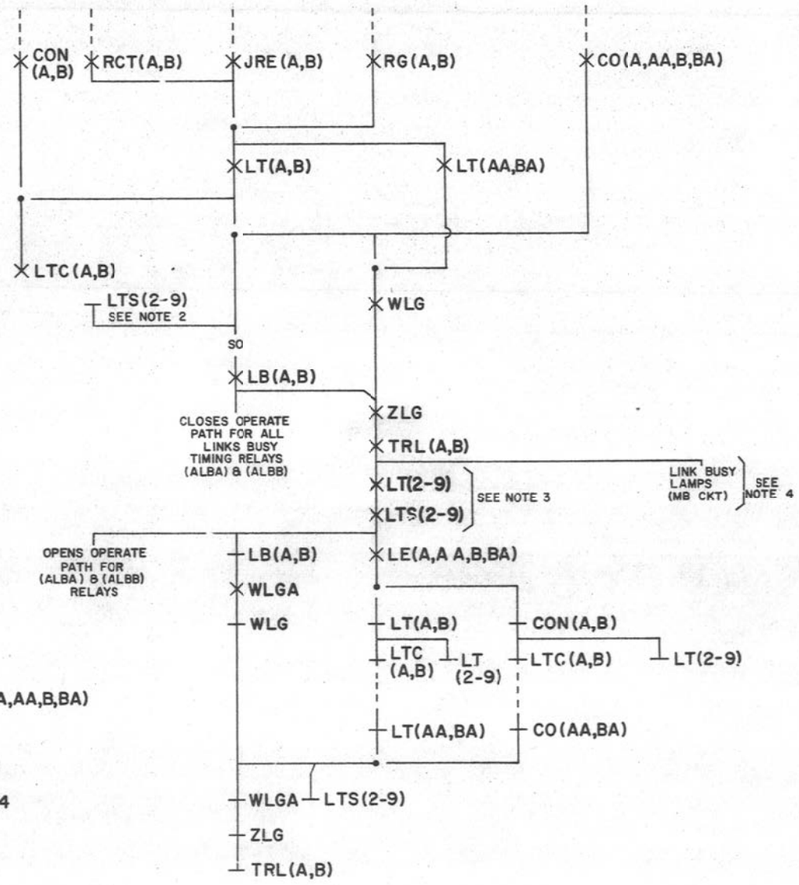

SHEET NOTES:

1. SC 10 ASSUMES THAT THE (WLG), (ZLG), (TRLA), AND (TRLB) RELAYS ARE RELEASED AT THE START OF THE MARKER OPERATION.
2. NO (LTS2) TO (LTS9) RELAYS OPERATE SINCE ALL LINKS IN FIRST GROUP TESTED ARE BUSY.
3. (LT2) TO (LT9) AND (LTS2) TO (LTS9) RELAYS CORRESPONDING TO IDLE LINKS IN SECOND GROUP OR IF A CAMP-ON OPERATION IS INVOLVED, THE RELAYS CORRESPONDING TO THE LINK BEING USED BY THE BUSY STATION.
4. LINK BUSY LAMPS CORRESPONDING TO IDLE LINKS IN SECOND GROUP WILL MOMENTARILY LIGHT OR IF A CAMP ON OPERATION IS INVOLVED, THE LAMP CORRESPONDING TO THE LINK BEING USED BY THE BUSY STATION WILL HAVE ALREADY BEEN LIT.

DRAWING ISSUE

12B	LMC	P0.B.
	LHE	1
19B	EG WVH PD	NY 2 HO
21B	FD WVH PD	3 HO
26AC	GP SAK KFH	4 HW9
32D	EWE SAK RHF	5
WORN DRAWING REPRODUCED WITHOUT CHANGE 8-3-67 FED		6 7 8 9
33D	FED POS RHF	10 HW 11
41B		DR 12

41

LINE, LINK, AND MARKER CIRCUIT (2) SD-65741-01-E11

BELL TELEPHONE LABORATORIES INCORPORATED — DWG SIZE 6S — PRINTED IN U.S.A.

SD-65741-01-E11

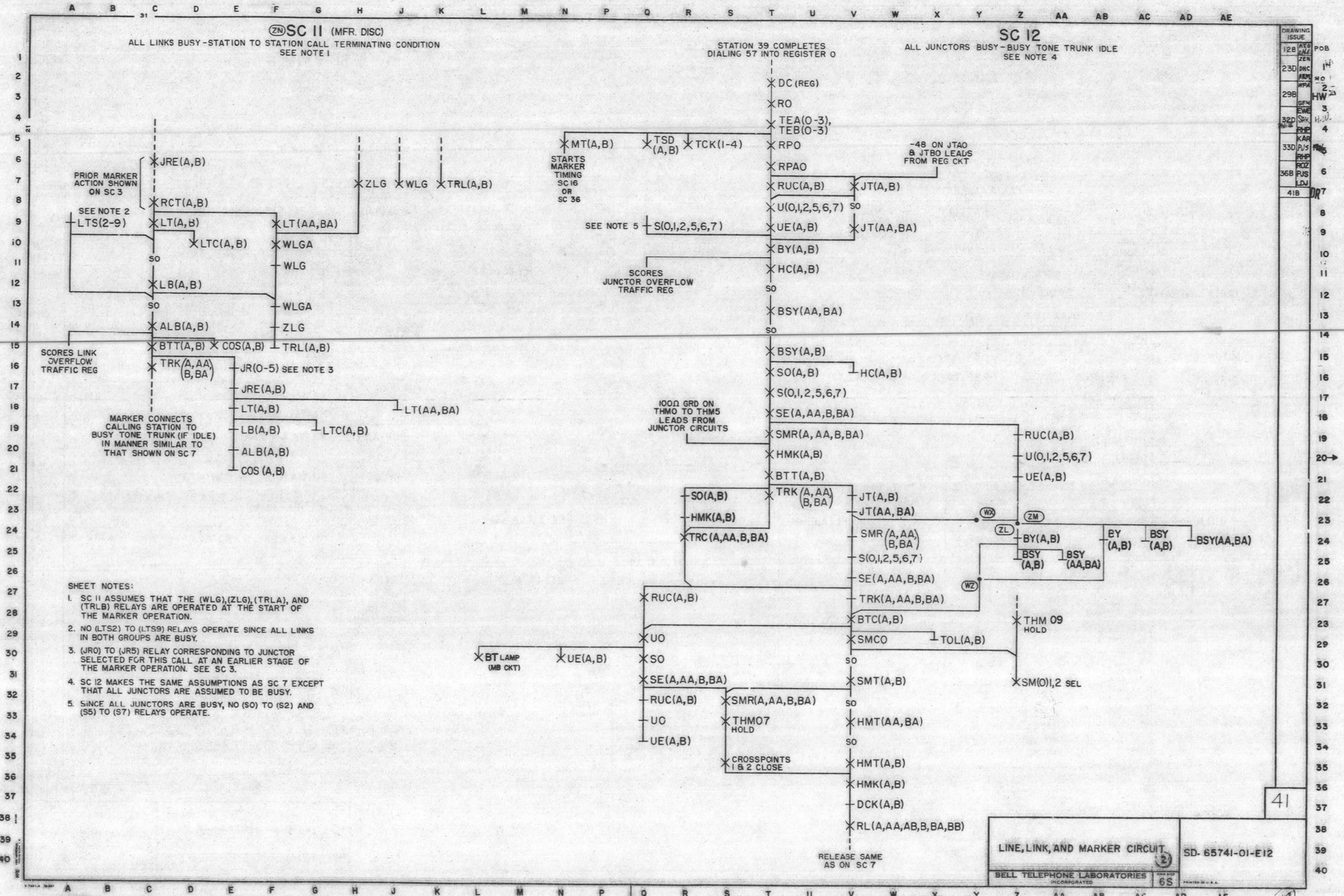

SHEET NOTES:

1. SC 11 ASSUMES THAT THE (WLG),(ZLG),(TRLA), AND (TRLB) RELAYS ARE OPERATED AT THE START OF THE MARKER OPERATION.
2. NO (LTS2) TO (LTS9) RELAYS OPERATE SINCE ALL LINKS IN BOTH GROUPS ARE BUSY.
3. (JR0) TO (JR5) RELAY CORRESPONDING TO JUNCTOR SELECTED FOR THIS CALL AT AN EARLIER STAGE OF THE MARKER OPERATION. SEE SC 3.
4. SC 12 MAKES THE SAME ASSUMPTIONS AS SC 7 EXCEPT THAT ALL JUNCTORS ARE ASSUMED TO BE BUSY.
5. SINCE ALL JUNCTORS ARE BUSY, NO (S0) TO (S2) AND (S5) TO (S7) RELAYS OPERATE.

SD-65741-01-E12

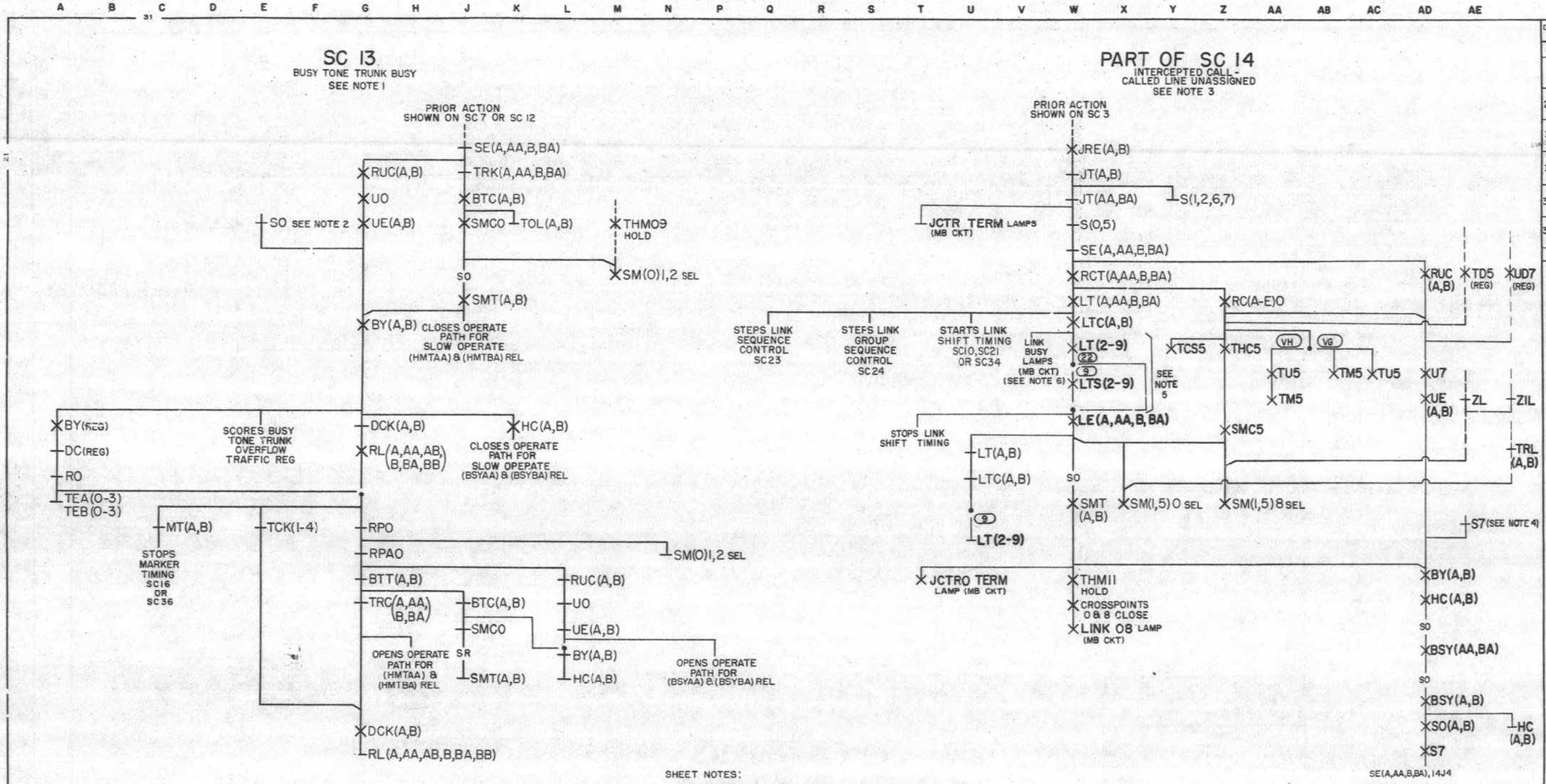

SHEET NOTES:

1. SC 13 MAKES THE SAME BASIC ASSUMPTIONS MADE FOR SC 7 AND SC 12.
2. SINCE THE BUSY TONE TRUNK IS BUSY THE (SO) RELAY WILL NOT OPERATE.
3. SC 14 MAKES THE SAME BASIC ASSUMPTIONS MADE FOR SC 3 EXCEPT THAT STATION 57 IS UNASSIGNED, ATTENDANT TRUNK 0 IS IDLE, AND THAT THE CALL IS ORIGINATED BY A STATION, CODE 8, OR ATTENDANT TRUNK.
4. SINCE STATION 57 IS UNASSIGNED, THE (S7) RELAY DOES NOT OPERATE AT THIS TIME.
5. LT2 TO LT9 RELAYS (OPTION 22) OR LTS2 TO LTS9 AND LT2 TO LT9 RELAYS (OPTION 9). CORRESPONDING TO IDLE LINKS IN GROUP BEING TESTED OPERATE.
6. LINK BUSY LAMPS ASSOCIATED WITH IDLE LINKS IN GROUP BEING TESTED MOMENTARILY LIGHT IN THE MAKE BUSY AND BUSY DISPLAY CKT.

41

LINE, LINK, AND MARKER CIRCUIT (2)

SD-65741-01-E13

BELL TELEPHONE LABORATORIES INCORPORATED

DWG SIZE 6S

PRINTED IN U.S.A.

SD-65741-01-E13

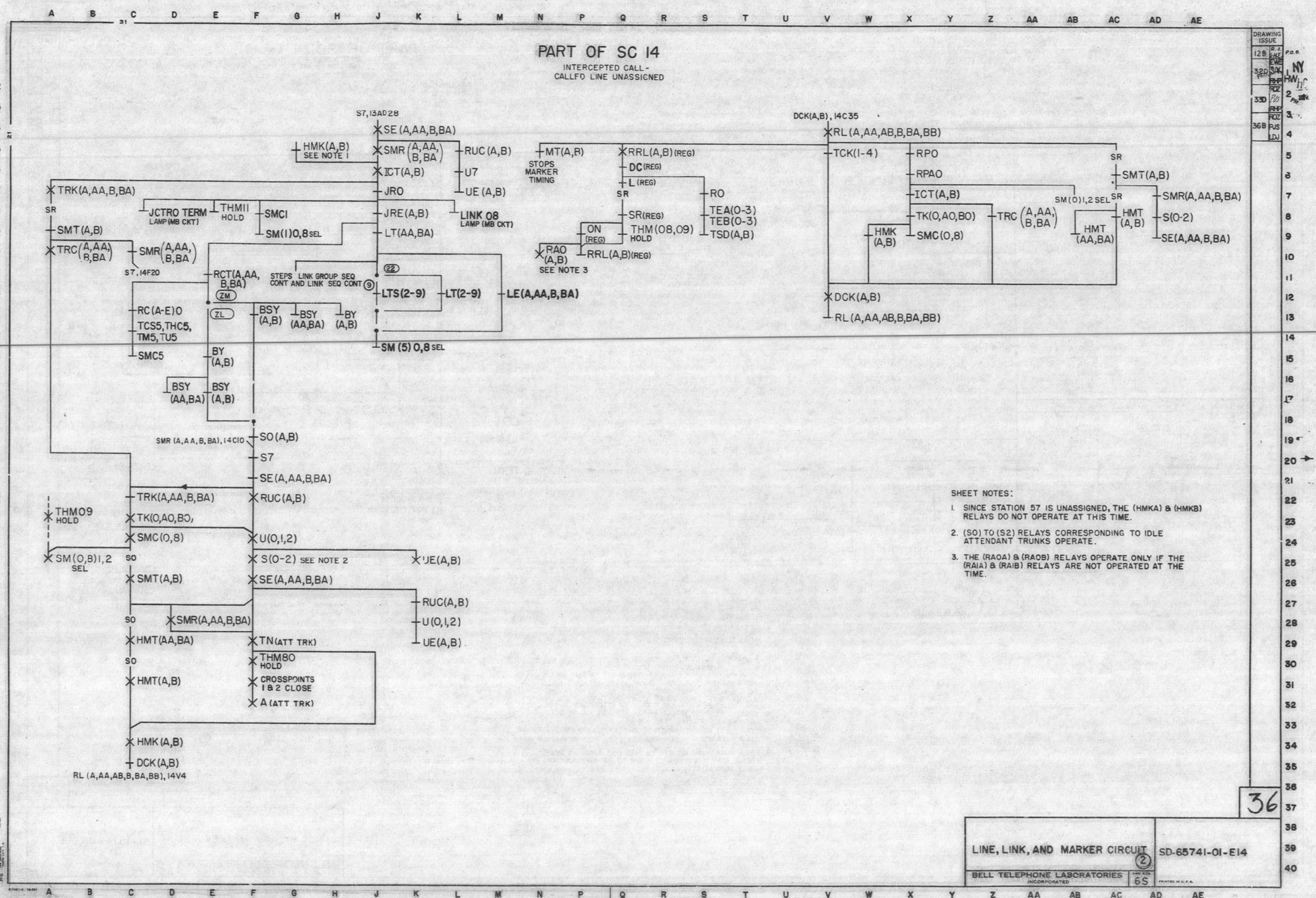

SHEET NOTES:

1. SINCE STATION 57 IS UNASSIGNED, THE (HMKA) & (HMKB) RELAYS DO NOT OPERATE AT THIS TIME.
2. (SO) TO (S2) RELAYS CORRESPONDING TO IDLE ATTENDANT TRUNKS OPERATE.
3. THE (RAOA) & (RAOB) RELAYS OPERATE ONLY IF THE (RAIA) & (RAIB) RELAYS ARE NOT OPERATED AT THE TIME.

SC 15

CENTRAL OFFICE OR RINGDOWN TIE TRK TO CODE 8 TRK CALL – ALL TRK BUSY SEE NOTE 1

TRK COMPLETES DIALING TRK CODE 83 INTO REG 1

DC (REG)
RI
TEA(0-3), TEB(0-3)
MT (A,B)
TSD (A,B)
TCK(1-4)
RPI
RPAI
STARTS MARKER TIMING SC 16 OR SC 36
COT (REG)
-48 ON RCTAI & RCTBI LEADS FROM REG CKT
COT(A,B)
RCT(A,AA,B,BA)
RUC(A,B)
RC(A-E)I
GRD ON T8 LEAD FROM REG CKT
GRD ON U3 LEAD FROM REG CKT
RV (REG)
THMI9 HOLD
TK(8,A8,B8)
P(TRK)
SMC(0,2)
TT (REG)
MC (TRK)
U(0-2 & 4-9) SEE NOTE 2
SM(2)0,6 SEL
SQ
U3
SMT(A,B)
TT(TRK)
P(TRK)
UE(A,B)
BY(A,B)
HC(A,B)
SO
BSY(AA,BA)
SO
BSY(A,B)
SO(A,B)
HC(A,B)
S(0-2 & 4-9)
S3
GRD ON "IT" LEAD FROM LINE CKT ASSOC WITH TRUNK 83
SE(A,AA,B,BA)
SMR(A,AA,B,BA)
RUC(A,B)
HMK(A,B)
U7
CO(A,AA,B,BA)
UE(A,B)
CON(A,AA,B,BA)
TRK(A,AA,B,BA)
LTC(A,B)
WC
22 WT
BY (TRK)
SM (0,2)0,6 SEL
SMC8
COS(A,B)
SR
SMT(A,B)
Q4 XSTR (VRDB)
DR (TRK)
SL (TRK)
STEPS LK GR SEQ CONT SC 24
STARTS LK SHIFT TIMING SC10, SC21 OR SC34
LT9
FF (TRK)
LTS9
LT9
LE(A,AA,B,BA)
22
Q4 XSTR (VRDB)
SUBSEQUENT ACTION AND MARKER RELEASE SIMILAR TO SC 20

(VQ) SC 16 (MFR DISC, SEE SC 36)

MARKER TIMING
SECOND TRIAL, NO CONNECTION, AND TROUBLE RELEASE

TE(A,B)2
MT(A,B)
TM(A,B)
TO(A,B)
SO
TA(A,B)
SR
TM(A,B)
SR
TO(A,B)

SECOND TRIAL SEE NOTE 3:
ST(A,B)
ST (A,B)R
RAI (A,B)
JR(0-5)
SMT (A,B)
RPA (0,1)
STEPS UNIT SEQ CONT SC 25
STEPS LK SEQ CONT SC 23

TA(A,B)
TM (A,B)
SA(A,B)
TO (A,B)
ST(A,B)R
SCORES SECOND TRIAL PEG COUNT REG
RESTORES OPERATING PATH OF JR(0-5) REL
STEPS LK SEQ CONT
STEPS UNIT SEQ CONT
SO
TA(A,B)
SR
TM(A,B)
SR
TO(A,B)

NO CONNECTION SEE NOTE 4:
NC(A,B)
TRC(A,AA,B,BA)
ICT (A,B)
JT(A,B)
NA (A,B)
RCT(A,AA,B,BA)
BTT(A,B)
TRK(A,AA,B,BA)
SMT(A,B)
SMR(A,AA,B,BA)
RESTORES OPERATING PATH OF (TRCA), (TRCAA), (TRCB), & (TRCBA) RELAYS
TM(A,B)
SR
TO(A,B)
TA(A,B)
TM(A,B)
TR(A,B)
RCK(A,B)
RLS(A,AA,B,BA)

TROUBLE RELEASE SEE NOTE 5:
MT(A,B)
NA (A,3)
NC (A,B)
SA (A,B)
ST (A,B)
SCORES NO CONNECTION PEG COUNT REG
SR
TM(A,B)
MARKER RELAYS NOT ASSOC WITH TIMING RESTORE TO NORMAL
SR
TR(A,B)
SO
RLS(A,AA,B,BA)
RCK(A,B)
SCORES TROUBLE RELEASE PEG COUNT REG

SHEET NOTES:

1. SC 15 MAKES THE SAME BASIC ASSUMPTIONS MADE FOR SC 6 EXCEPT THAT TRUNK 83 AND ALL OTHER TRUNKS IN HUNTING GROUP ARE BUSY.
2. (U0) TO (U2) & (U4) TO (U9) RELAYS ASSOCIATED WITH OTHER TRUNKS IN SAME HUNTING GROUP ALSO OPERATE THRU STRAPPED H80 THRU H89 PUNCHINGS.
3. IF THE MARKER HAS NOT COMPLETED THE CALL IN PROCESS BEFORE THE (STA),(STB),(STAR),&(STBR) RELAYS OPERATE, THE CALL SEQUENCE WILL BE RETURNED TO NEAR THE BEGINNING FOR A SECOND TRIAL & THE LINK & UNIT SEQUENCE CONTROL CIRCUITS ADVANCED.
4. IF THE MARKER HAS NOT BEEN ABLE TO ESTABLISH THE CONNECTION ON A SECOND TRIAL BEFORE THE (NCA) & (NCB) RELAYS OPERATE, AN ATTEMPT IS MADE TO ESTABLISH A BUSY TONE CONNECTION.
5. IF THE MARKER IS NOT ABLE TO ESTABLISH A BUSY TONE CONNECTION ON A "NO CONNECTION" BASIS, THE MARKER WILL TROUBLE RELEASE WHEN THE (RLSA),(RLSAA),(RLSB),&(RLSBA) RELAYS OPERATE & RESTORE TO NORMAL TO SERVE A CALL IN THE NEXT HIGHER TENS GROUP.

DRAWING ISSUE
12B PTK LJG DEW P.O.B.
23D DHC ARM
29B WPA PJS GFH
33D ROZ PJS REPS
38D ROZ PJS LDJ
41B DR

41

LINE, LINK, AND MARKER CIRCUIT (2) SD-65741-01-E15
BELL TELEPHONE LABORATORIES INCORPORATED 6S PRINTED IN U.S.A.

SD-65741-01-E15

(12)

SC 18
TIME OUT CHECK

BTC(A,B)
TE(A2,B0,B2) SEE NOTE 3
TOL(A,B)
DCK(A,B)
TOK(A,B)
RL(A,B)
SEE NOTE 4
TOL(A,B)
MT(A,B)
VR
SCORES TIME OUT PEG COUNT REG
VQ
TM(A,B)
TO(A,B)
SO
TA(A,B)
SR
TM(A,B)
SR
TO(A,B)
"T" TIMER ON
TIMED INTERVAL
T(A,B)
TA(A,B)
SR
TM(A,B)
SR
TO(A,B)
SA(A,B)
ST(A,B)R
SCORES SECOND TRIAL PEG COUNT REG
SO
TA(A,B)
SR
TM(A,B)
SR
TO(A,B)
NC(A,B)
TA(A,B)
TM(A,B)
NA(A,B)
TO(A,B)
SO
TA(A,B)
SR
TM(A,B)
SR
TO(A,B)
TA(A,B)
TR(A,B)
TM(A,B)
RCK(A,B)
RLS(A,AA,B,BA)
MT(A,B)
TM (A,B)
NA (A,B)
NC (A,B)
SA (A,B)
ST (A,B)
SR
TR(A,B)
TOK(A,B)
SCORES NO CONNECTION PEG COUNT REG
RLS (A,AA,B,BA)
SO
RCK(A,B)
SCORES TROUBLE RELEASE PEG COUNT REG

ST(A,B)
ST(A,B)R
VR
TIMER OFF
T(A,B)
SA(A,B)
ST(A,B)R
SCORES SECOND TRIAL PEG COUNT REG
"T" TIMER ON
TIMED INTERVAL
T(A,B)
NC(A,B)
T(A,B)
TIMER OFF
NA(A,B)
"T" TIMER ON
TIMED INTERVAL
T(A,B)
TR(A,B)
RCK(A,B)
RLS(A,AA,B,BA)
MT(A,B)
NA(A,B)
NC (A,B)
SA (A,B)
ST (A,B)
SR
TIMER OFF
T(A,B)
TR(A,B)
TOK(A,B)
SCORES NO CONNECTION PEG COUNT REG
RLS (A,AA,B,BA)
SO
RCK(A,B)
SCORES TROUBLE RELEASE PEG COUNT REG

SC 17
ABANDONED CALL
SEE NOTE 1

STATION 39 LIFTS HANDSET
L39
T3
STATION 40 LIFTS HANDSET
L40
T4
TEA(0-3),
TEB(0-3)
MT (A,B)
TSD (A,B)
TCK (1-4)
TP3
START MARKER TIMING SC16 OR SC36
VN
VQ
TCS3
THC3
TAC(A,AA,B,BA)
SMC3
TU3
TM3
TU3
TM3
STATION 39 HANGS UP
SEE NOTE 2
L39
LUC(A,B)
UL (A,B)
RG(A,AA,B,BA)
STEPS UNITS SEQ CONTROL SC25
SO
AC(A,B)
DCK(A,B)
RL(A,AA,AB,B,BA,BB)
MT(A,B)
TA3
T3
TCK(1-4)
DCK(A,B)
RL(A,AA,AB (B,BA,BB)
TP4
STOPS MARKER TIMING SC16 OR SC36
TP3
TCS3, THC3 TM3, TU3
SMC3
TAC(A,AA,B,BA)
LUC(A,B)
AC(A,B)
UL (A,B)
STEPS UNIT SEQ CONTROL
RG(A, AA,B,BA)
MARKER PROCEEDS TO ESTABLISH DIAL TONE CONNECTIONS FOR STATION 40

SHEET NOTES:

1. SC 17 ASSUMES THAT ONLY STATIONS 39 AND 40 ARE BIDDING FOR THE MARKER AND STATION 39 ABANDONS THE CALL BEFORE THE (U9) RELAY OPERATES.
2. SINCE STATION 39 HUNG UP AND THE (L39) RELAY RELEASED, THE (U9) RELAY DOES NOT OPERATE. WITH THE (U9) RELAY RELEASED THE (UEA) AND (UE8) RELAYS DO NOT OPERATE AND THEREFORE THE (LUCA) AND (LUCB) RELAYS DO NOT RELEASE THUS ALLOWING THE (ACA) AND (ACB) RELAYS TO OPERATE.
3. (TC_A) AND (TOLB) RELAYS RELEASED WHEN (BTCA) AND (BTCB) RELAYS OPERATED DURING SOME PREVIOUS MARKER OPERATION. TIME OUT CHECK IS STARTED WHEN (TEA2),(TEB0), AND (TEB2) RELAYS RELEASE.
4. (TOLA) AND (TOLB) RELAYS REMAIN OPERATED UNTIL (BTCA) AND (BTCB) RELAYS REOPERATE ON SOME SUBSEQUENT MARKER OPERATION.

DRAWING ISSUE 418

41

LINE, LINK AND MARKER CIRCUIT (2)

SD-65741-01-E16

BELL TELEPHONE LABORATORIES INCORPORATED 6S

SD-65741-01-E16

SC 19

CALLED LINE UNASSIGNED-
ALL ATTENDANT TRUNKS BUSY
SEE NOTE 1

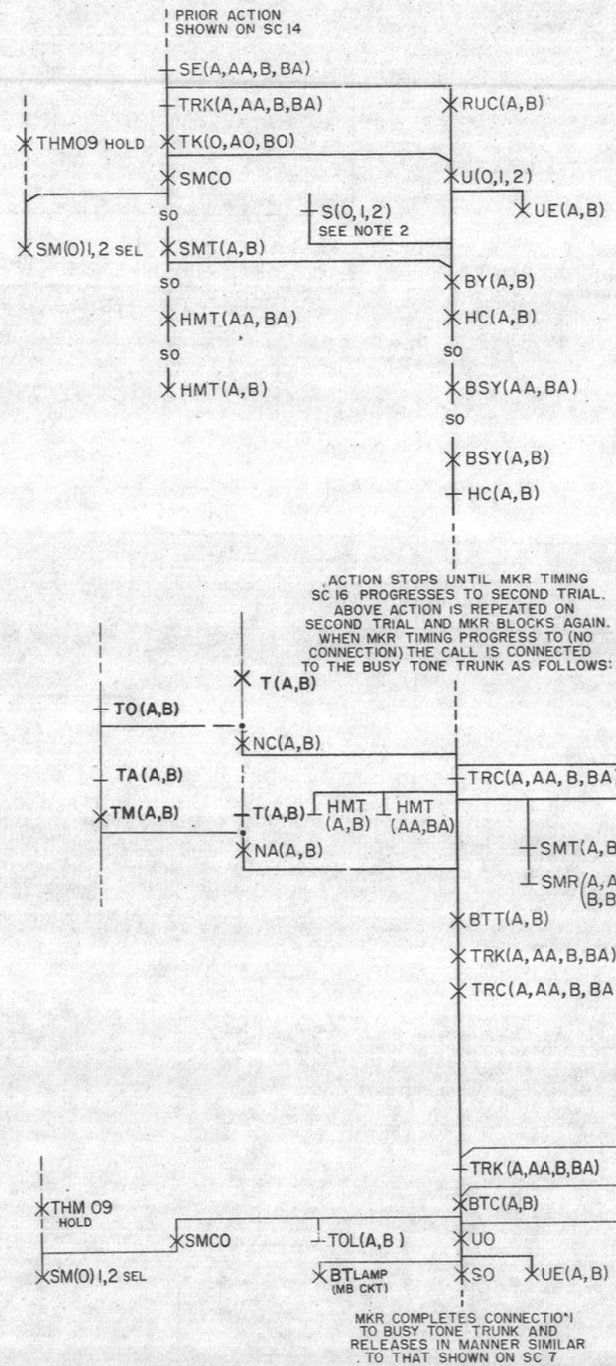

SHEET NOTES:

1. SC 19 MAKES THE SAME BASIC ASSUMPTIONS MADE FOR SC 14 EXCEPT THAT ALL ATTENDANT TRUNKS ARE BUSY. IT IS ALSO ASSUMED THAT BUSY TONE TRUNK IS IDLE.
2. (SO),(S1), AND (S2) RELAYS DO NOT OPERATE SINCE ALL ATTENDANT TRUNKS ARE BUSY.

DRAWING ISSUE

12B	AEG LKE ZZN
23D	DNC ABP WPA
29B	GFH EWE SBK
32D	RHP ROZ PJS LDJ
36B	
41B	

POB HW DR

41

SD-65741-01-E17

LINE, LINK, AND MARKER CIRCUIT (2) | SD-65741-01-E17

BELL TELEPHONE LABORATORIES INCORPORATED | SIZE 6S | PRINTED IN U.S.A.

SC 20

CENTRAL OFFICE OR RINGDOWN TIE TRUNK CALL TO BUSY STATION — ALL OTHER STATIONS IN HUNTING GROUP ALSO BUSY — ANOTHER TRUNK IS CAMPED ON SEE NOTE ONE

PRIOR ACTION SAME AS ON SC 9

BY(A,B)
HC(A,B)
U(0-9) SEE NOTE 2
SO
BSY(AA,BA)
SO
BSY (A,B)
SO(A,B) — HC(A,B), U(0-9) SEE NOTE 2
S7
SE(A,AA,B,BA)
SMR(A,AA,B,BA) — RUC(A,B), U7, UE(A,B)
HMK(A,B)
CO(A,AA,B,BA)

100Ω GRD ON S LEAD FROM STATION 57 LINE CKT

BY RS DR — SEE NOTE 3

CON(A,AA,B,BA)
LTC (A,B)
TRK(A,AA,B,BA)
(22) (9) COS — Q5 XSTR (VRDA,B)
Q3 XSTR (VRDA) (22) (9) LT4
LTS4
COS(A,B)
FF (TRK)
SMC (0,8)
SM (5)0,6 SEL
BY (TRK)
SL (TRK)
DR (TRK)
STEPS LINK GROUP SEQUENCE CONTROL SC 24
SR
STARTS LINK SHIFT TIMING SC10,SC21 OR SC34
SMT(A,B)
STOPS MARKER TIMING SC16 OR SC36
STOPS LINK SHIFT TIMING
LE(A,AA,B,BA)
Q3 XSTR (VRDA) (22)
CON(A,AA,B,BA)
TRL(A,B)
SM(0,8)4 SEL
SM(0,8)0 SEL

HM (TRK) THM88 HOLD CROSSPOINTS 0 & 6 OPEN
LTC (A,B) (9) LT4
SMR(A,AA,B,BA) — S7, SE(A,AA,B,BA)
SO (A,B)
HMK(A,B)
TRC(A,AA,B,BA), 18 W5
(22) (9) COS — Q5 XSTR (VRDA,B)

HMK(A,B),18G29
TRC(A,AA,B,BA)
TRK(A,AA,B,BA)
SO
RCT(A,AA,B,BA) — (ZM) BY(A,B) BSY(A,B) BSY(AA,BA)
SMT (A,B) — RC(A-E)I (ZL) BY(A,B) BSY(A,B) BSY(AA,BA)
TCS5, THC5, TM5, TU5 — RV (REG)
HM (TRK) THM88 HOLD
CROSSPOINTS 0 & 4 CLOSE
SO
HMT(AA,BA)
RS (TRK) HD (TRK)
HMT(A,B)
HMK(A,B)
DCK(A,B)
RL(A,AA,AB,B,BA,BB)

MT (A,B) MC (TRK)
SR
SMT(A,B)
SR
HMT (AA,BA) HMT(A,B)
DCK(A,B)
RL(A,AA,AB,B,BA,BB)

TCK (I-4)
LE(A,AA,B,BA) — (9) LTS4 — COS (A,B) — SM (0,8) 0,4 SEL
HMK(A,B)

RPI
RPAI
TRC (A,AA) (B,BA) — COT (A,B)
CO(A,AA,B,BA) — SMC(0,8)
(22) LT4 STEPS LINK GROUP SEQUENCE CONTROL

RRL(A,B) (REG)
DC (REG)
RI
TEA(0-3) TEB(0-3) TSD(A,B)
L (REG)
SR (REG)
THM(18,19) HOLD
ON (REG)
COT (REG)
RRL(A,B) (REG)
RAI (A,B)

SHEET NOTES:

1. SC 20 ASSUMES THAT TRUNK 8 COMPLETES DIALING 57 INTO REGISTER 1. THE MARKER ATTEMPTS TO COMPLETE THE CONNECTION TO STATION 57 BUT FINDING IT AND THE OTHER STATIONS IN THE HUNTING GROUP BUSY ATTEMPTS TO CAMP THE TRUNK ON TO STATION 57 AS SHOWN ON SC 9. HOWEVER ANOTHER TRUNK IS FOUND TO BE CAMPED ON. LINK 06 IS ASSUMED TO HAVE BEEN USED FOR THE DIAL TONE CONNECTION AND LINK 04 FOR THE BUSY CONNECTION TO STATION 57. IT IS ALSO ASSUMED THAT THE MARKER TESTS LINK GROUP 02–09 FIRST AND THAT NO CHECK FAILURES OR BLOCKAGES OCCUR TO CAUSE A SECOND TRIAL OR A TROUBLE RELEASE.
2. (U0) TO (U9) RELAYS CORRESPONDING TO STATIONS IN SAME HUNTING GROUP.
3. THE COS RELAY (OPTION 9) OR THE Q5 TRANSISTOR (OPTION 22) IS OPERATED FROM GROUND PLACED BY THE MARKER ON THE SLEEVE OF STATION 57 THRU THE OPERATED (BY),(RS), AND (DR) RELAYS OF THE CAMPED ON TRUNK.

DRAWING ISSUE: 12B, 33D, 41B

41

LINE, LINK, AND MARKER CIRCUIT (2)

BELL TELEPHONE LABORATORIES INCORPORATED

SHEET SIZE 6S

SD-65741-01-E18

SD-65741-01-E18

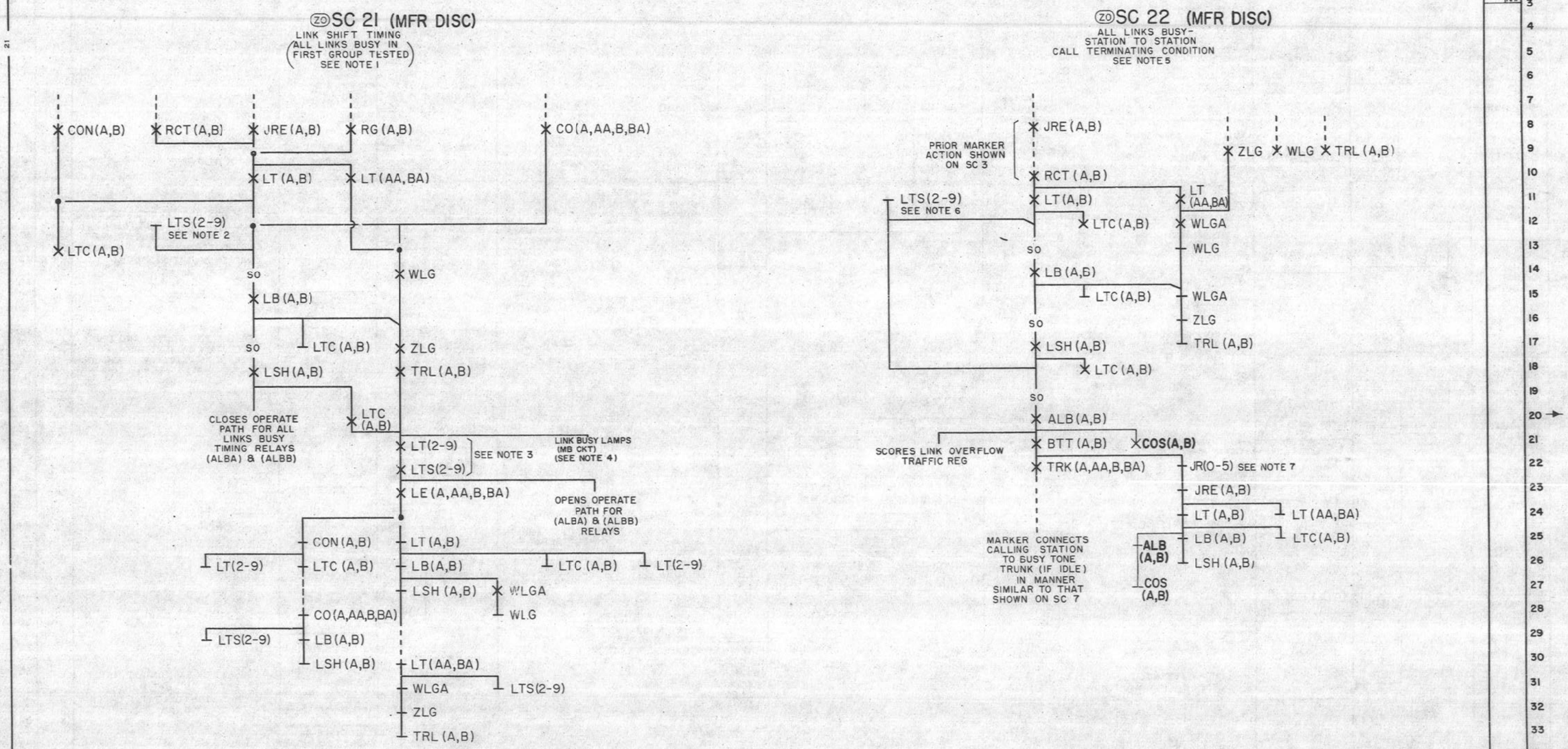

SHEET NOTES:

1. SC 21 ASSUMES THAT THE (WLG), (ZLG), (TRLA), AND (TRLB) RELAYS ARE RELEASED AT THE START OF THE MARKER OPERATION.
2. NO (LTS2) TO (LTS9) RELAYS OPERATE SINCE ALL LINKS IN FIRST GROUP TESTED ARE BUSY OR IN THE CAMP ON OPERATION, THE LINK BEING USED BY THE BUSY STATION IS NOT IN FIRST GROUP.
3. (LT2) TO (LT9) AND (LTS2) TO (LTS9) RELAYS CORRESPONDING TO IDLE LINKS IN SECOND GROUP OR IF A CAMP ON OPERATION IS INVOLVED, THE RELAY CORRESPONDING TO THE LINK BEING USED BY THE BUSY STATION.
4. LINK BUSY LAMPS CORRESPONDING TO IDLE LINKS IN SECOND GROUP WILL MOMENTARILY LIGHT OR IF A CAMP-ON OPERATION IS INVOLVED, THE LAMP CORRESPONDING TO THE LINK BEING USED BY THE BUSY STATION WILL HAVE ALREADY BEEN LIT.
5. SC 22 ASSUMES THAT THE (WLG), (ZLG), (TRLA), AND (TRLB) RELAYS ARE OPERATED AT THE START OF THE MARKER OPERATION.
6. NO (LTS2) TO (LTS9) RELAYS OPERATE SINCE ALL LINKS IN BOTH GROUPS ARE BUSY.
7. (JR0) TO (JR5) RELAYS CORRESPONDING TO JUNCTOR SELECTED FOR THIS CALL AT AN EARLIER STAGE OF THE MARKER OPERATION. SEE SC 3.

DRAWING ISSUE	
12B	L.M.C. L.H.E. P.O.B.
32D	EWE SAK RHP HW
33D	ROZ PJS RHP

33

LINE, LINK, AND MARKER CIRCUIT (2)

SD-65741-01-E19

BELL TELEPHONE LABORATORIES INCORPORATED

6S

PRINTED IN U.S.A.

SD-65741-01-E19

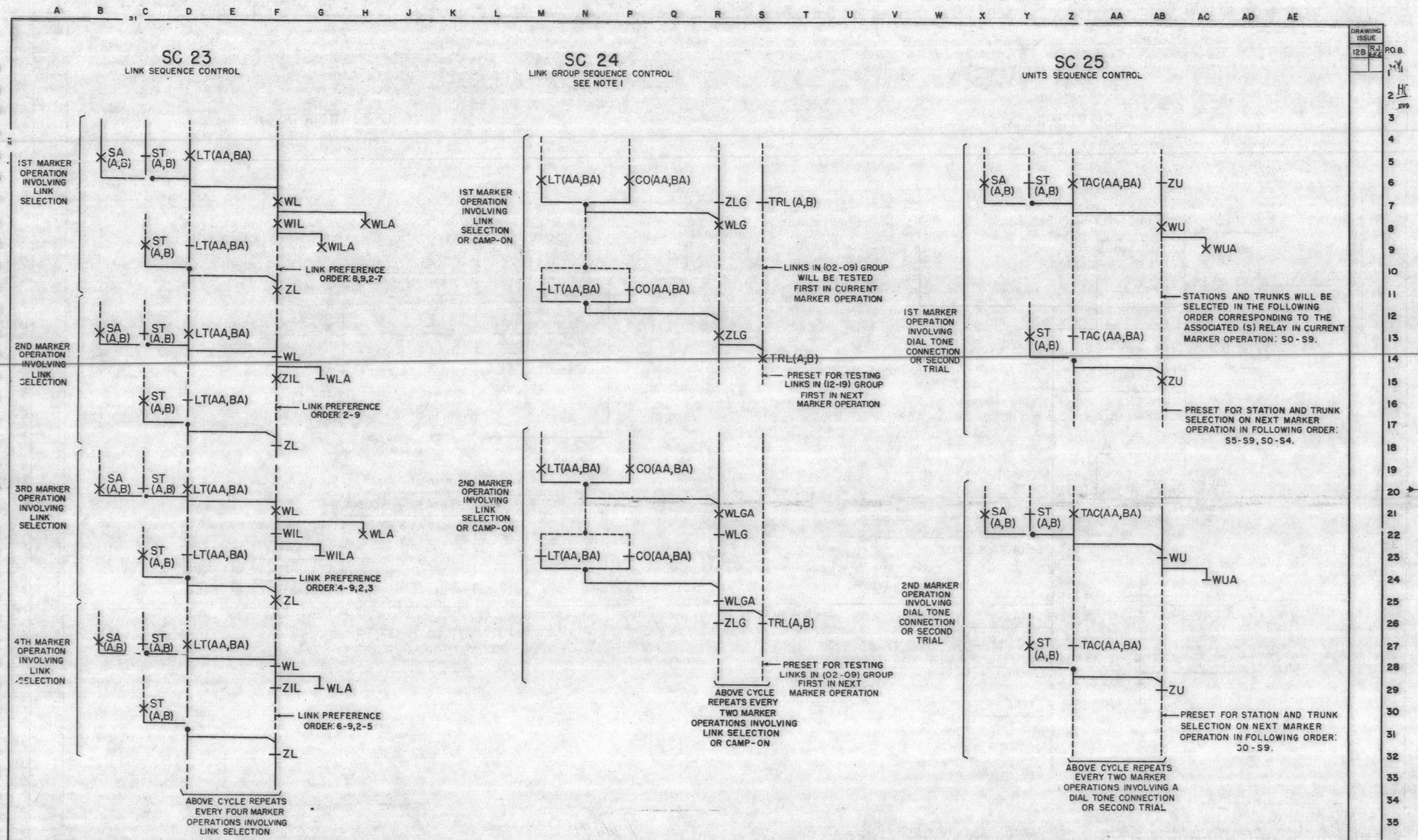

SHEET NOTES:

1. SC 24 ASSUMES THAT ON EACH MARKER OPERATION AN IDLE LINK OR THE CAMP-ON LINK IS FOUND IN FIRST GROUP TESTED.

DRAWING ISSUE 12B R.J. P.O.B.

12

NO. 756A
LINE, LINK, AND MARKER CIRCUIT (2)

SD-65741-01-E20

BELL TELEPHONE LABORATORIES INCORPORATED

6S

SD-65741-01-E20

SC 26

CANCEL CAMP-ON
SEE NOTE 1

SHEET NOTES:

1. SC 26 ASSUMES THE FOLLOWING:
   (A) NO OTHER REGISTER, LINE, OR TRUNK IS BIDDING FOR THE MARKER.
   (B) TRUNK OBTAINED A DIAL TONE CONNECTION IN ACCORDANCE WITH SC 2 AND THEREFORE LINK 06 WAS USED FOR THAT CONNECTION.
   (C) THE PREVIOUS MARKER OPERATION HAS LEFT (TRLA) AND (TRLB) RELAYS RELEASED SO THAT LINKS IN THE 02-09 GROUP ARE TESTED FIRST.
   (E) NO BLOCKAGES OR CHECK FAILURES OCCUR TO CAUSE THE MARKER TO MAKE A SECOND TRIAL OR PROGRESS TO A TROUBLE RELEASE.

DRAWING ISSUE
23D ZEN DRC AHP
36B ROZ PJS LDJ

(STA DIAL TR TRK) OR (DIAL CONF TRK CKT) X MC
X CCC

IOE27
X SMR(A,AA,B,BA)
X HMK(A,B)
X BTT(A,B,C)
X FF(TRK)
X DR(TRK)

X TRK (A, AA, B, BA) — SO(A,B)
SR
SMT(A,B) — HMK(A,B)
SMR(A,AA,B,BA)
S7
SE(A,AA,B,BA)
X TRC(A,AA,B,BA)
RCT (A, AA / B, BA)
TRK(A,AA,B,BA)

(ZM)
(ZL)
RC(A,E)O
TCS5, THC5
TM5, TU5
SMC5
BY(A,B)
BSY(A,AA,B,BA)
BY(A,B)
BSY(A,B)
BSY(AA,BA)
(WZ)

SUBSEQUENT RELEASE SIMILAR TO SC7 RUC(A,B) 9S6

SUBSEQUENT RELEASE SIMILAR TO SC7 BTC(A,B) 9N5

36

LINE, LINK, AND MARKER CIRCUIT (2) — SD-65741-01-E21

BELL TELEPHONE LABORATORIES INCORPORATED — 6S

SD-65741-01-E21

ⓚ SC 27 (MFR DISC)

CENTRAL OFFICE OR RINGDOWN TIE TRUNK CALL TO BUSY STATION
MESSAGE REGISTRATION PULSE ON SLEEVE OF ANY LINK
(SEE NOTE 1)

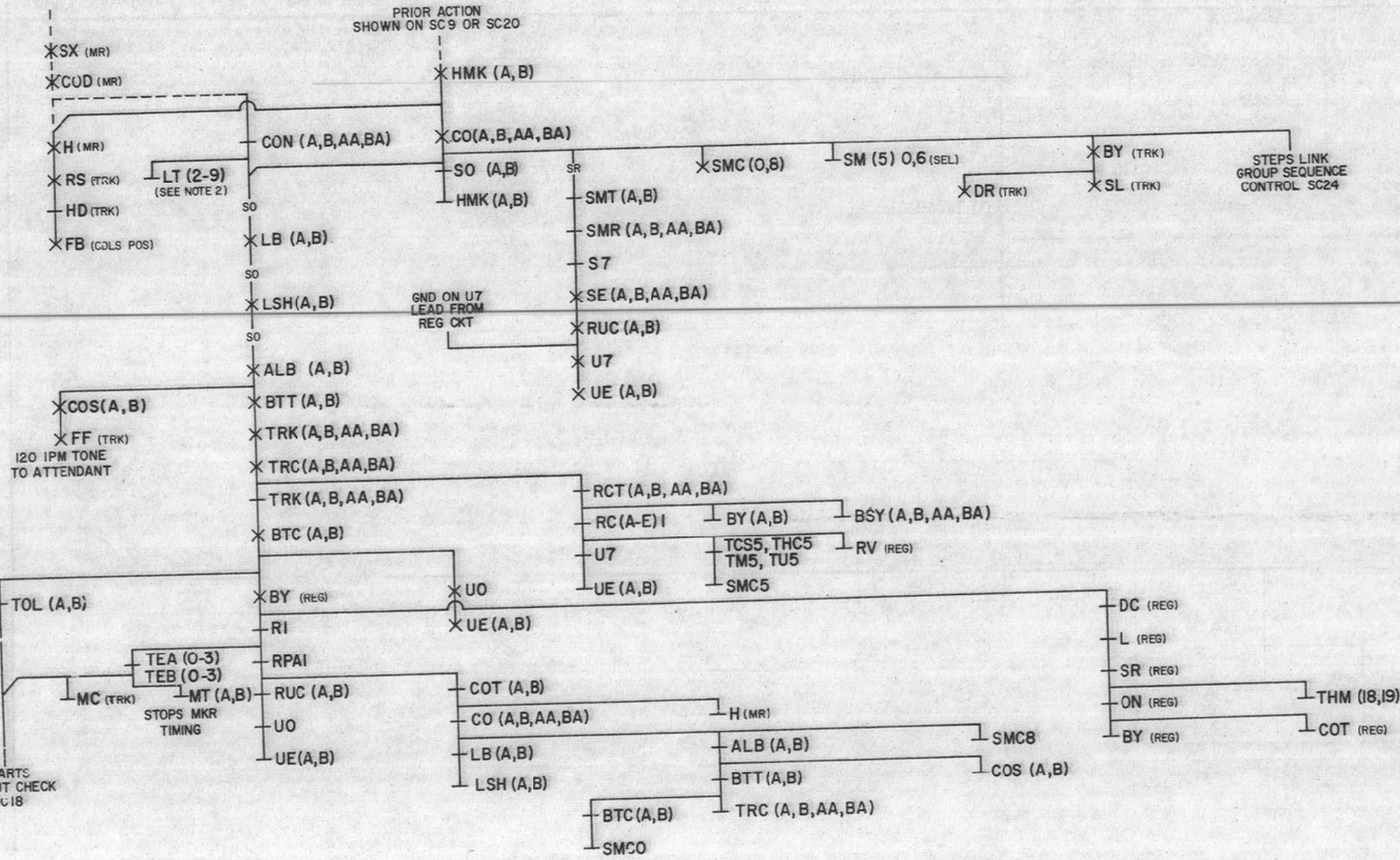

SHEET NOTES:

1. SC27 ASSUMES THE FOLLOWING:
   (A) NO OTHER REGISTER, LINE OR TRUNK IS BIDDING FOR THE MARKER.
   (B) TRUNK 8 OBTAINED A DIAL TONE CONNECTION IN ACCORDANCE WITH SC2 AND THEREFORE LINK 06 WAS USED FOR THAT CONNECTION.
   (C) LINK 04 WAS USED FOR EXISTING CONNECTION TO BUSY STATION 57.
   (D) THE PREVIOUS MARKER OPERATION HAS LEFT THE (TRLA) AND (TRLB) RELAYS RELEASED SO THAT LINKS IN THE 02-09 GROUP ARE TESTED FIRST.
   (E) NO BLOCKAGES OR CHECK FAILURES OCCUR TO CAUSE THE MARKER TO MAKE A SECOND TRIAL OR PROGRESS TO A TROUBLE RELEASE.
   (F) THE MESSAGE REGISTRATION PULSE IS PRESENT PRIOR TO LINK TESTING AND SELECTION PREVENTING THE OPERATION OF THE CON (A,B,AA,BA) RELAYS.
2. WITH CON (A,B,AA,BA) NORMAL, NO LT (2-9) RELAYS WILL OPERATE.

DRAWING ISSUE
24D RWP SAK KFJ
33D FED RHP
35D FED RHP

35

LINE, LINK AND MARKER CIRCUIT | SD-65741-01-E22 (2)
BELL TELEPHONE LABORATORIES INCORPORATED. | 6S

SD-65741-01-E22

SC 28

CENTRAL OFFICE TO
INWARD RESTRICTED STATION

TRUNK COMPLETES DIALING 57
INTO REGISTER 1

DC (REG)

RI

MKR ACTION

RPAI

-48 ON RCTAI
& RCTBI LEADS
FROM REG CKT

RCT(A,AA,B,BA)

RC(A,E)I

GRD ON
T5 LEAD
FROM REG CKT

VG VH

TU5 TM5 TU5 THC5 TM5

TCS5

RV (REG)

P (TRK)

MC (TRK)

P (TRK)

RUC(A,B)

GRD ON
U7 LEAD
FROM REG CKT

U7

AU7
(IN. RESTRICTION CKT)

COT (REG)

COT(A,B)

XR

BV (BSY VERIF AUX TRK CKT)

THM19 HOLD

SMC5

SM (5)0,6 SEL

SO

SMT (A,B)

IR_
(IN. RESTRICTION CKT)

UE(A,B)

S7
SEE NOTE 2

BY(A,B)

SO

BSY(AA,BA)

SO

BSY(A,B)

SO(A,B)

S7

MKR ACTION

HMK(A,B)
SEE NOTE 3

ICT

MKR ACTION

TN (ATND TRK)

THM80 HOLD

CROSSPOINTS

A (ATND MKR)

HMK(A,B)

DCK(A,B)

RL (A,AA,AB,B,BA,BB)

AU7
(IN. RESTRICTION CKT)

IR_
(IN. RESTRICTION CKT)

MKR & REG RELEASE

SHEET NOTES:

1. STATION 57 IS RESTRICTED FROM RECEIVING CENTRAL OFFICE CLASS CALLS.
2. SINCE STATION 57 IS RESTRICTED, THE (S7) RELAY DOES NOT OPERATE AT THIS TIME.
3. SINCE STATION 57 IS RESTRICTED, THE (HMKA) & (HMKB) RELAYS DO NOT OPERATE AT THIS TIME.
4. ASSUME ATTENDANT TRUNK 0 IS IDLE.
5. THE PREVIOUS MARKER OPERATION HAS LEFT THE (RA1A) & (RA1B) RELAYS OPERATED & THE (RA0A) & (RA0B) RELAYS RELEASED SO THAT REGISTER 1 IS SELECTED ON THIS CALL.
6. NO OTHER TRUNK, LINE, OR REGISTER IS BIDDING FOR THE MARKER.
7. NO BLOCKAGES OR CHECK FAILURES OCCUR TO CAUSE THE MARKER TO MAKE A SECOND TRIAL OR PROGRESS TO A TROUBLE RELEASE.

DRAWING ISSUE		
25D	RSP SAK KFJ	HW
29B	WPA GFH	
WORN DRAWING REPRODUCED WITHOUT CHANGE 8-3-66 J J R		PJS
37B	ROZ PJS LDJ	

37

LINE, LINK, AND MARKER CIRCUIT (2)

SD-65741-01-E23

BELL TELEPHONE LABORATORIES
INCORPORATED

6S

PRINTED IN U.S.A.

SD-65741-01-E23

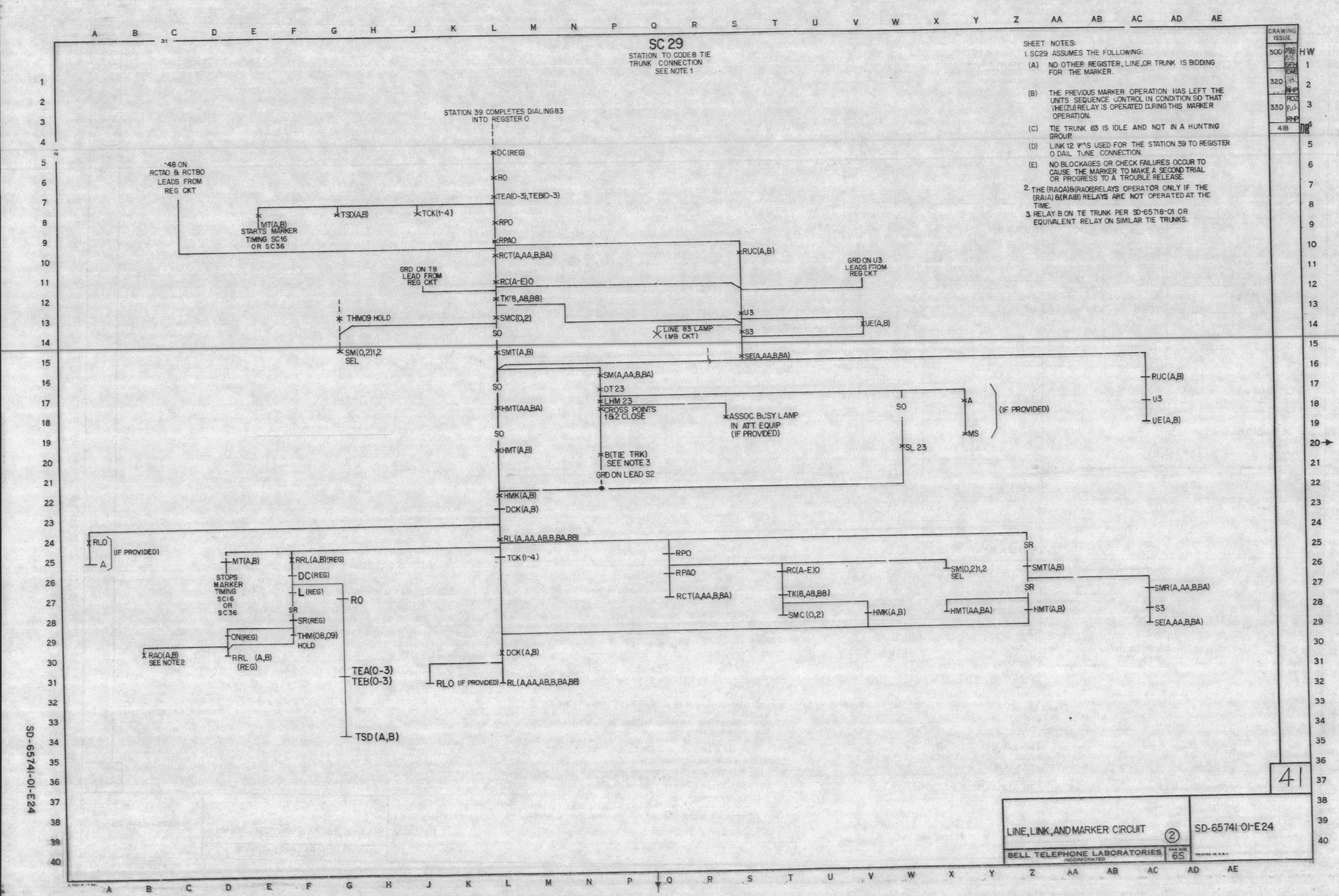

SHEET NOTES:

1. SC29 ASSUMES THE FOLLOWING:
   (A) NO OTHER REGISTER, LINE, OR TRUNK IS BIDDING FOR THE MARKER.
   (B) THE PREVIOUS MARKER OPERATION HAS LEFT THE UNITS SEQUENCE CONTROL IN CONDITION SO THAT THE (ZU) RELAY IS OPERATED DURING THIS MARKER OPERATION.
   (C) TIE TRUNK 83 IS IDLE AND NOT IN A HUNTING GROUP.
   (D) LINK 12 WAS USED FOR THE STATION 39 TO REGISTER 0 DAIL TONE CONNECTION.
   (E) NO BLOCKAGES OR CHECK FAILURES OCCUR TO CAUSE THE MARKER TO MAKE A SECOND TRIAL OR PROGRESS TO A TROUBLE RELEASE.
2. THE (RAOA) & (RAOB) RELAYS OPERATOR ONLY IF THE (RAIA) & (RAIB) RELAYS ARE NOT OPERATED AT THE TIME.
3. RELAY B ON TIE TRUNK PER SD-65718-01 OR EQUIVALENT RELAY ON SIMILAR TIE TRUNKS.

DRAWING ISSUE	
30D	MAB PJS GFH
32D	EWE RHP
33D	ROZ PJS RHP
41B	DR

SD-65741-01-E24

SC 30

CODE 8 TIE TRUNK DIAL TONE CONNECTION
SEE NOTE 1

TIE TRUNK 89 SEIZED BY DISTANT PBX

GRD. ON LEAD S2

L29

T2

TEA(0-3)
TEB(0-3)

TP2

GRD ON LEAD IT 89

LINE 89
LAMP (MB CKT)

MT (A,B)

TSD (A,B)

TCK(1-4)

STARTS MARKER TIMING SC16 OR SC36

TAC(A,AA,B,BA)

LUC (A,B)

UL (A,B)

RG (A,AA,B,BA)

VG

TM2
S9, E12

TU2

TCS2

THC2

STARTS ABANDON CALL TIMING SC17

U9

TM2 N9, P11

VH

TM2
S9, E12

SMC (0-1)

SMC 2

LT (A,AA,B,BA)

S9

UE(A,B)

LUC (A,B)

STOPS ABANDON CALL TIMING

SE(A,AA,B,BA)

LTC(A,B)

STARTS LINK SHIFT TIMING SC20, SC21 OR SC34

STEPS LINK GROUP SEQ CONTROL SC24

STEPS LINK SEQ CONTROL SC23

LT(2-9)
22
9
LTS (2-9)

SEE NOTE 2

LINK BUSY LAMPS (MB CKT) SEE NOTE 3

STOPS LINK SHIFT TIMING

LE(A,AA,B,BA)

SO

SMT(A,B)

LT(A,B)

LTC(A,B) 9

LT(2-9)

SM(0,1,2)2 SEL

SM(0,1,2) 1 SEL

SL 25

SMR (A,AA,BA)

IN 29

LHM 29 HOLD

A

MS

IF PROVIDED

ASSOC BUSY LAMPS IN ATT EQUIP (IF PROVIDED)

L29

CROSSPOINTS 1&2 CLOSE

L (REG)

SR (REG)

HMT (AA,BA)

THM(08,09) HOLD

CROSSPOINTS 1&2 CLOSE

HMT (A,B)

LINK 12 LAMP (MB CKT)

RHK (A,B)

HMK (A,B)

DCK(A,B)

RL(A,AA,AB,B,BA,BB)

WIL

ZL

TRL (A,B)

RAO (A,B)

TOLL DENIED CLASS OF SERVICE

TLD(REC)

TT

TT (REG)

TOLL ALLOWED CLASS OF SERV.

RESTRICTED CLASS OF SERV.

TT (REG)

TT

TT (REG)

TLA (REG)

TLD (REG)

MT (A,B)

TCK (1-4)

STOPS MARKER TIMING SC16 OR SC36

TA2

T2

TEA(0-3)
TEB(0-3)

TA2

TSD (A,B)

TP2

TAC(A,AA,B,BA)

RAO(A,B)

UL(A,B)

U9

UE (A,B)

TCS2, THC2, TM2, TU2

SMC2

RG (A,AA,B,BA)

SMC (0,1)

HMK (A,B)

TT (IF OPERATED)

RHK (A,B)

LE(A,AA,B,BA)

9
LTS (2-9)

SM(0,1,2)1,2

LT(AA,BA)

STEPS LINK GROUP SEQ CONTROL

STEPS LINK SEQ CONTROL

22
LT (2-9)

SR

SMT(A,B)

SMR (A,AA,B,BA)

S9

SE(A,AA,B,BA)

SR

HMT (A,B)

HMT (AA,BA)

DCK(A,B)

RL(A,AA,AB,B,BA,BB)

SHEET NOTES:

1. SC 30 ASSUMES THE FOLLOWING:
   (A) NO OTHER LINE, TRUNK, OR REGISTER IS BIDDING FOR THE MARKER.
   (B) THE PREVIOUS MARKER OPERATION HAS LEFT THE (RAOA) AND (RAOB) RELAYS OPERATED SO THAT REGISTER O IS SELECTED ON THIS CALL.
   (C) THE PREVIOUS MARKER OPERATION HAS LEFT THE (TRLA) AND (TRLB) RELAYS OPERATED SO THAT LINKS IN THE 12-19 GROUP ARE TESTED FIRST.
   (D) THE PREVIOUS MARKER OPERATION HAS LEFT LINK SEQUENCE CONTROL IN CONDITION SO THAT THE (WIL) AND (ZL) RELAYS WILL REMAIN OPERATED AFTER THE (LTAA) AND (LTBA) RELAYS OPERATE DURING THIS MARKER OPERATION.
   (E) LINK 12 IS IDLE.
   (F) NO BLOCKAGES OR CHECK FAILURES OCCUR TO CAUSE THE MARKER TO MAKE A SECOND TRAIL OR PROGRESS TO A TROUBLE RELEASE.
2. LT2 TO LT9 RELAYS (OPTION 22) OR LT2 TO LT9 AND LTS2 TO LTS9 RELAYS (OPTION 9) CORRESPONDING TO IDLE LINKS IN GROUP BEING TESTED OPERATE.
3. LINK BUSY LAMPS ASSOCIATED WITH IDLE LINKS IN GROUP BEING TESTED MOMENTARILY LIGHT IN THE MAKE BUSY AND BUSY DISPLAY CKT.

DRAWING ISSUE		
30D	RJS	HW
	GFH	
32D	EWE	
	SAK	
	RHF	
33D	ROZ	
	RJS	
	RHF	
37B	ROZ	
	RJS	
	LDJ	
41B		

41

LINE, LINK, AND MARKER CIRCUIT (2)

SD-65741-01-E25

BELL TELEPHONE LABORATORIES INCORPORATED

6S

PRINTED IN U.S.A.

SD-65741-01-E25

SC 31

CODE 8 TIE TRUNK TO CODE 8
TIE TRUNK CONNECTION
SEE NOTE 1

SHEET NOTES:

1. SC 31 ASSUMES THE FOLLOWING:
   (A) DIAL TIE TRUNK 83 IS IDLE.
   (B) LINK 06 WAS USED FOR THE TRUNK TO REGISTER DIAL TONE CONNECTION.
   (C) NO BLOCKAGES OR CHECK FAILURES OCCUR TO CAUSE THE MARKER TO MAKE A SECOND TRIAL OR PROGRESS TO A TROUBLE RELEASE.
2. RELAY B ON TIE TRUNK PER SD-65718-01 OR EQUIVALENT RELAY ON SIMILAR TIE TRUNKS.
3. RELAY A, B, & MS ASSOCIATED WITH TIE TRUNK 89.
4. RELAY A, B, & MS ASSOCIATED WITH TIE TRUNK 83.

TIE TRUNK 89 COMPLETES DIALING DIAL TIE TRUNK CODE 83 INTO REGISTER 0

DC (REG)
RO
TEA(0-3), TEB(0-3)
MT(A,B)
TSD(A,B)
TCK(1-4)
RPO
RPAO
STARTS MARKER TIMING SC 16 OR SC 36
-48 ON RCTAO & RCTBO LEADS FROM REG CKT
RCT(A,AA,B,BA)
RUC(A,B)
GRD ON TB LEAD FROM REG CKT
RC(A-E)0
GRD ON U3 LEAD FROM REG CKT
U3
TK(8,A8,B8)
UE(A,B)
THM 09 HOLD
SMC(0,2)
LINE 83 LAMP (MB CKT)
S3
SM(0,2)0,6 SEL
SE(A,AA,B,BA)
SMT(A,B)
RUC(A,B)
U3
UE(A,B)
SMR(A,AA,B,BA)
OT23
LHM23
CROSSPOINTS 086 CLOSE
SO
ASSOC. BUSY LAMP IN ATT EQUIP. (IF PROVIDED)
A (IF PROVIDED) SEE NOTE 3
TT (REG.)
A
MS
(IF PROVIDED) SEE NOTE 4
HMT(AA,BA)
B(TIE TRK) SEE NOTE 2
SL23
SO
HMT(A,B)
B SEE NOTE 3
TPC(TIE TRK 89) (IF PROVIDED)
PO(TIE TRK 89)
B SEE NOTE 4
TPC(TIE TRK 83) (IF PROVIDED)
PO(TIE TRK 83)
GRD ON S2 LEAD
HMK(A,B)
DCK(A,B)
RLO(IF PROVIDED)
RL(A,AA,AB,B,BA,BB)
MARKER RELEASE SIMILAR TO RELEASE ON SC 29

DRAWING ISSUE
30D
30D
32D
41B

41

LINE, LINK, AND MARKER CIRCUIT (2)
BELL TELEPHONE LABORATORIES INCORPORATED
SD-65741-01-E26

SD-65741-01-E26

SC 32

CODE 8 TIE TRUNK EQUIPPED WITH SWITCHED PAD TO SWITCHBOARD ATTENDANT CONNECTION SEE NOTE 1

SHEET NOTES:

1. SC 32 ASSUMES THE FOLLOWING:
   - (A) NO OTHER REGISTER, LINE, OR TRUNK IS BIDDING FOR THE MARKER.
   - (B) THE PREVIOUS MARKER OPERATION HAS LEFT THE UNITS SEQUENCE CONTROL IN CONDITION SO THAT THE (ZU) RELAY IS OPERATED DURING THIS MARKER OPERATION.
   - (C) ATTENDANT TRUNK "0" IS IDLE.
   - (D) LINK 12 WAS USED FOR THE STATION 39 TO REGISTER 0 DIAL TONE CONNECTION.
   - (E) NO BLOCKAGES OR CHECK FAILURES OCCUR TO CAUSE THE MARKER TO MAKE A SECOND TRIAL OR PROGRESS TO A TROUBLE RELEASE.
2. (S5) TO (S7) RELAYS CORRESPONDING TO IDLE ATTENDANT TRUNKS OPERATE.
3. THE (RAOA) & (RAOB) RELAYS OPERATE ONLY IF THE (RAIA) & (RAIB) RELAYS ARE NOT OPERATED AT THE TIME.

TIE TRUNK 89 COMPLETES DIALING INTO REGISTER 0

-48 ON RCTAO & RCTBO LEADS FROM REG CKT

DC (REG)
RO
TEA (0-3), TEB (0-3)
MT (A,B) — STARTS MARKER TIMING SC 16 OR SC 36
TSD (A,B)
TCK (1-4)
RPO
RPAO
RCT (A,AA,B,BA)
RUC (A,B)

GRD ON TO LEAD FROM REG CKT
RC (A-E)
TK (0,A0,B0)
THM09 HOLD
SM (0,8)1,2 SEL
SMC (0,8)
U (5-7,9)
S (5-7) (SEE NOTE 2)
UE (A,B)
SO
SMT (A,B)
SE (A,AA,B,BA)
SMR (A,AA,B,BA)
ZU

GRD ON U5 & U9 LEADS FROM REG CKT
A
DVT (TIE TRK)
TPC (TIE TRK)
PO (TIE TRK)
OP (TIE TRK SWBD APPLIQUE CKT)
TRK LAMP
TIP & RING BETWEEN TIE TRK AND PBX OPENS

SO
HMT (AA,BA)
SO
HMT (A,B)
HMK (A,B)
DCK (A,B)
RL (A,AA,AB,B,BA,BB)
RUC (A,B)
U (5-7,9)
UE (A,B)
THM80
CROSS POINTS 1 & 2 CLOSE
A (ATT TRK)
B (ATT TRK)

RLO
A
DVT (TIE TRK)
TPC (TIE TRK)
PO (TIE TRK)
MT (A,B) — STOPS MARKER TIMING SC 16 OR SC 36
RRL (A,B) (REG)
DC (REG)
L (REG)
SR
SR (REG)
ON (REG)
THM (08,09) HOLD
SL (ATT TRK)
TT (REG)
RAO (A,B) SEE NOTE 3
RRL (A,B) (REG)
RO
TEA (0-3), TEB (0-3)
TSD (A,B)
A (ATT TRK)
SR
B (ATT TRK)
IN29
MS
THM80
CROSS POINTS 1 & 2 RELEASE
SL (ATT TRK)

TCK (1-4)
MC (TRK)
RPO
RPAO
RCT (A,AA,B,BA)
RC (A-E) 0
TK (0,A0,B0)
SMC (0,8)
HMK (A,B)
SM (0,8) 1,2 SEL
HMT (AA,BA)
SR
SMT (A,B)
HMT (A,B)
SMR (A,AA,B,BA)
S (5-7)
SE (A,AA,B,BA)

DCK (A,B)
RL (A,AA,AB,B,BA,BB)
RLO

DRAWING ISSUE
30D 10-A PJS GFH
33D ROZ PJS RHF
41B

HW

41

LINE, LINK, AND MARKER CIRCUIT (2) — SD-65741-01-E27

BELL TELEPHONE LABORATORIES INCORPORATED — SIZE 6S — PRINTED IN U.S.A.

SD-65741-01-E27

DRAWING ISSUE
33D ROZ PJS RHP 1
35D ROZ PJS RHP HW 2
37B ROZ PJS LDJ 3
41B 4

(WV) SC 33

CENTRAL OFFICE OR RINGDOWN TIE TRUNK CALL TO BUSY STATION
MESSAGE REGISTRATION PULSE ON SLEEVE OF ANY LINK
(SEE NOTE 1)

TRUNK 8 COMPLETES DIALING 57 INTO REGISTER 1

DC (REG)
RI
TEA(0-3)
TEB(0-3)
-48 ON RCTAI & RCTBI LEADS FROM REG CKT
RPI
RPAI
RCT(A,AA,B,BA)
RC(A-E)I
RUC(A,B)
GRD ON T5 LEAD FROM REG CKT
GRD ON U7 LEAD FROM REG CKT
COT (REG)
COT (A,B)
SX (MR)
TSD(A,B)
MT(A,B)
STARTS MARKER TIMING SC16 OR SC36
TCK(1-4)
RV (REG)
P (TRK)
MC (TRK)
P (TRK)
U7
UE(A,B)
THMI9 HOLD
TU5
TM5
TU5
TM5
THC5
TCS5
SMC5
SM(5)0,6 SEL
VG
VH
SO
SMT(A;B)
BY(A,B)
HC(A,B)
U(0-9)
BSY(AA,BA)
BSY(A,B)
SO(A,B)
HC(A,B)
U(0-9) SEE NOTE 2
S7
SE(A,AA,B,BA)
100Ω GRD ON S LEAD FROM STATION 57 LINE CKT
RUC(A,B)
U7
UE(A,B)
SMR(A,AA,B,BA)
HMK(A,B)
CO(A,AA,B,BA)
CON(A,B)
TRK(A,AA,B,BA)
(SEE NOTE 2)
H(MR)
COD (MR)
SM(5)0,6 SEL
BY (CO TRK)
SMC(0,8)
SMT (A,B)
DR (CO TRK)
SL (CO TRK)
LB(A,B)
LSH(A,B)
ALB(A,B)
COS(A,B)
FF(CO TRK)
LE(A,AA,B,BA)
CON(A,B)
H(MR)
SMR(A,AA,B,BA) 28W5

NOTES:
1. SC33 ASSUMES THE FOLLOWING:
   (A) NO OTHER REGISTER, LINE OR TRUNK IS BIDDING FOR THE MARKER.
   (B) TRUNK 8 OBTAINED A DIAL TONE CONNECTION IN ACCORDANCE WITH SC2 AND THEREFORE LINK 06 WAS USED FOR THAT CONNECTION.
   (C) LINK 04 WAS USED FOR EXISTING CONNECTION TO BUSY STATION 57.
   (D) THE PREVIOUS MARKER OPERATION HAS LEFT THE (TRLA) AND (TRLB) RELAYS RELEASED SO THAT LINKS IN THE 02-09 GROUP ARE TESTED FIRST.
   (E) NO BLOCKAGES OR CHECK FAILURES OCCUR TO CAUSE THE MARKER TO MAKE A SECOND TRIAL OR PROGRESS TO A TROUBLE RELEASE.
   (F) THE MESSAGE REGISTRATION PULSE IS PRESENT PRIOR TO LINK TESTING AND SELECTION PREVENTING THE OPERATION OF THE CON(AA,BA) RELAYS.
2. WITH CON(AA,5A), LT(A,B) AND LTC(A,B) NORMAL, NO LT2-9 RELAYS WILL OPERATE.

CON(A,B) 28J37
SMR(A,AA,B,BA)
SO(A,B)
THM 88 HOLD
CROSSPOINTS 086 OPEN
HM (TRK)
S7
SE(A,AA,B,BA)
HMK(A,B)
TRC(A,AA,B,BA)
RUC(A,B)
TRK(A,AA,B,BA)
RCT(A,AA,B,BA)
RC(A-E)I
BY(A,B)
BSY(A,B)
BSY (AA,BA)
TCS5,THC5 TM5,TU5
RV (REG)
SMC 5
HD (CO TRK)
ACA (CO TRK)
SP (CDLS POS CKT)
SMT(A,B)
HM (TRK)
THM88 HOLD
HMT (AA,BA)
RS (CO TRK)
HD (CO TRK)
FB (CDLS POS CKT)
ALONE WITH BY (CO TRK) AND FF (CO TRK) 120 IPM TONE TO ATTENDANT
HMT(A,B)
HMK(A,B)
DCK(A,B)
RL (A,AA,AB,B,BA,BB)
LE(A,AA,B,BA)
MT(A,B)
STOPS MARKER TIMER SC16 OR SC36
TCK(1-4)
RRL(A,B) (REG)
DC (REG)
RI
L (REG)
SR (REG)
SMT (A,B)
THM(18,19) HOLD
ON (REG)
TEA(0-3)
TEB(0-3)
RRL (A,B)(REG)
COT (REG)
RAI (A,B)
TSD(A,B)
MC (CO TRK)
RPI
RPAI
SX (MR)
COT(A,B)
RUC(A,B)
HMK (A,B)
COD (MR)
HMT (AA,BA)
HMT (A,B)
CO(A,AA,B,BA)
SMC (0,8)
STEPS LINK GROUP SEQUENCE CONTROL
ALB (A,B)
LB(A,B)
COS (A,B)
LSH (A,B)
TRC(A,AA,B,BA)
DCK (A,B)
RL (A,AA,AB,B,BA,BB)

41

LINE, LINK AND MARKER CIRCUIT (2)
SD-65741-01-E28
BELL TELEPHONE LABORATORIES INCORPORATED 6S

SD-65741-01-E28

(22) SC 34
LINK SHIFT TIMING
(ALL LINKS BUSY IN FIRST GROUP TESTED SEE NOTE 1)

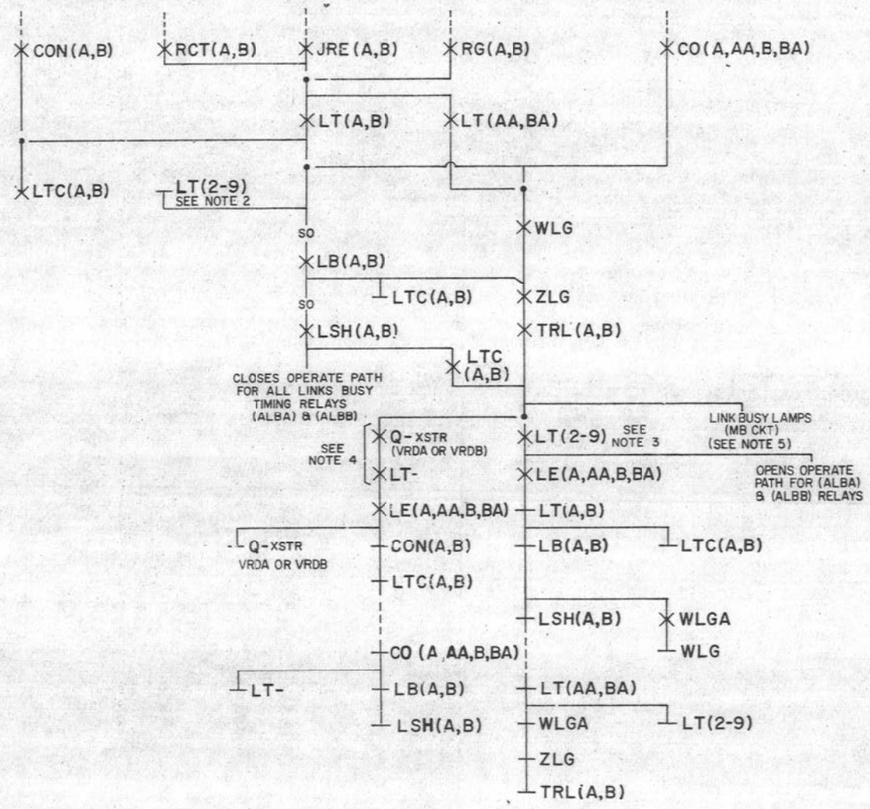

(22) SC 35
ALL LINKS BUSY-STATION TO STATION CALL TERMINATING CONDITION (SEE NOTE 6)

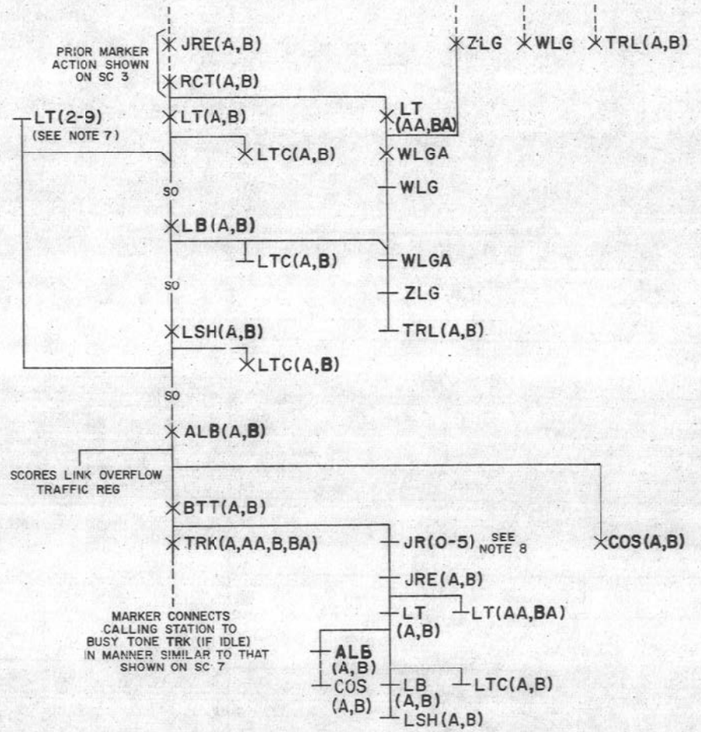

NOTES:

1. SC 34 ASSUMES THAT THE (WLG),(ZLG),(TRLA), AND (TRLB) RELAYS ARE RELEASED AT THE START OF THE MARKER OPERATION.
2. NO (LT2) TO (LT9) RELAYS OPERATE SINCE ALL LINKS IN FIRST GROUP TESTED ARE BUSY OR IN THE CAMP-ON OPERATION, THE LINK BEING USED BY THE BUSY STATION IS NOT IN FIRST GROUP.
3. LT2 TO LT9 RELAYS CORRESPONDING TO IDLE LINKS IN SECOND GROUP OPERATE.
4. Q- TRANSISTOR AND LT- RELAY CORRESPONDING TO LINK BEING USED BY THE BUSY STATION OPERATES.
5. LINK BUSY LAMPS CORRESPONDING TO IDLE LINKS IN SECOND GROUP WILL MOMENTARILY LIGHT OR IF A CAMP-ON OPERATION IS INVOLVED, THE LAMP CORRESPONDING TO THE LINK BEING USED BY THE BUSY STATION WILL HAVE ALREADY BEEN LIT.
6. SC 35 ASSUMES THAT THE (WLG), (ZLG), (TRLA), AND (TRLB) RELAYS ARE OPERATED AT THE START OF THE MARKER OPERATION.
7. NO LT2 TO LT9 RELAYS OPERATE SINCE ALL LINKS IN BOTH GROUPS ARE BUSY.
8. (JR0) TO (JR5) RELAYS CORRESPONDING TO JUNCTOR SELECTED FOR THIS CALL AT AN EARLIER STAGE OF THE MARKER OPERATION. SEE SC 3.

LINE, LINK AND MARKER CIRCUIT (2)

BELL TELEPHONE LABORATORIES INCORPORATED — SIZE 6S — PRINTED IN U.S.A.

SD-65741-01-E29

SD-65741-01-E29

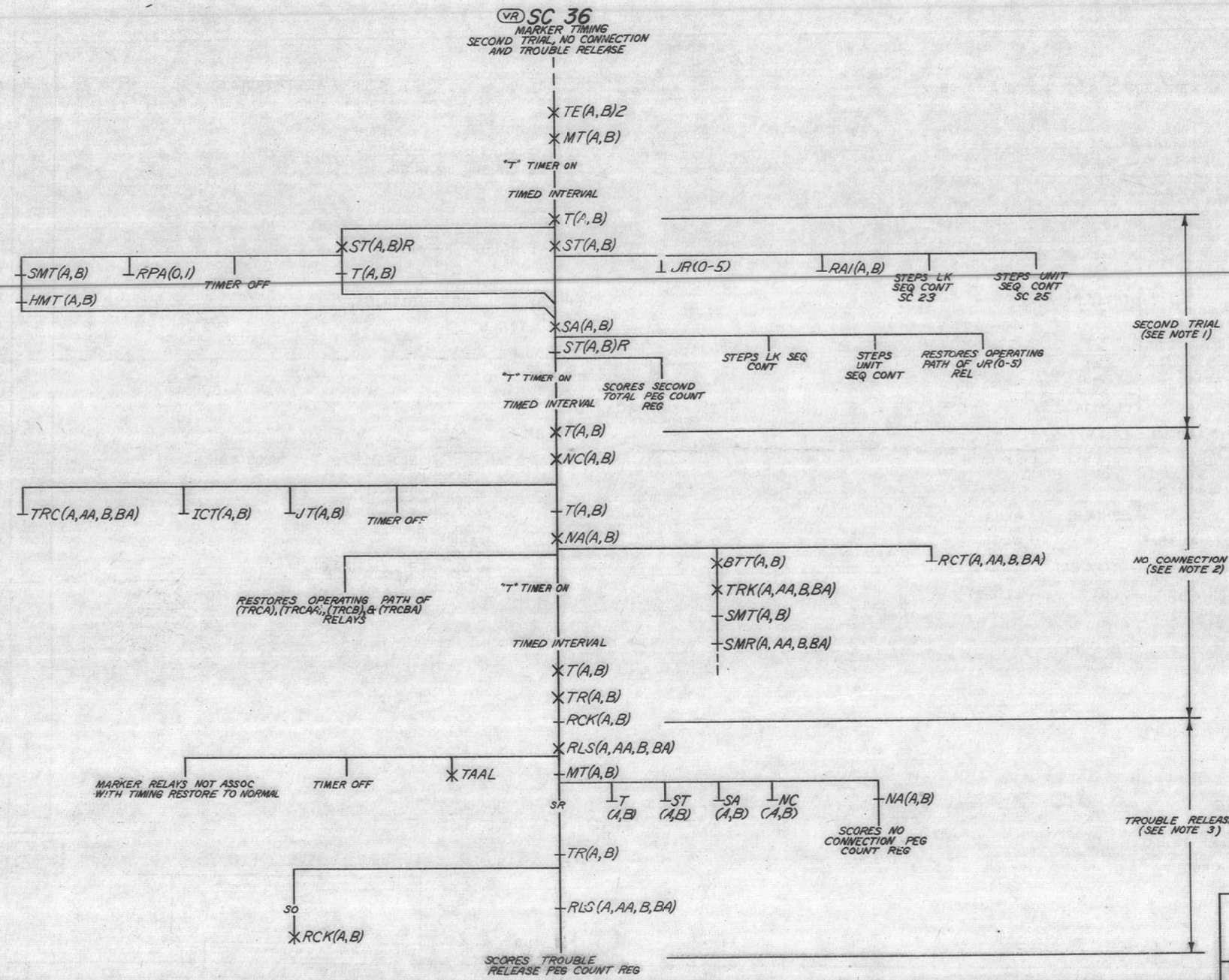

SHEET NOTES:

1. IF THE MARKER HAS NOT COMPLETED THE CALL IN PROCESS BEFORE RELAYS (STA), (STB),(STAR), & (STBR) OPERATE, THE CALL SEQUENCE WILL BE RETURNED TO NEAR THE BEGINNING FOR A SECOND TRIAL & THE LINK & UNIT SEQUENCE CONTROL CIRCUITS WILL BE ADVANCED.
2. IF THE MARKER HAS NOT BEEN ABLE TO ESTABLISH THE CONNECTION ON A SECOND TRIAL BEFORE RELAYS (NCA) & (NCB) OPERATE, AN ATTEMPT IS MADE TO ESTABLISH A BUSY TONE CONNECTION.
3. IF THE MARKER IS NOT ABLE TO ESTABLISH A BUSY TONE CONNECTION ON A "NO CONNECTION" BASIS, THE MARKER WILL TROUBLE RELEASE WHEN RELAYS (RLSA), (RLSAA),(RLSB),& (RLSBA) OPERATE & RESTORE TO NORMAL TO SERVE A CALL IN THE NEXT HIGHER TENS GROUP.

DRAWING ISSUE
41B DR
42B DR

42

LINE, LINK AND MARKER CIRCUIT (2)

SD-65741-01-E30

BELL TELEPHONE LABORATORIES INCORPORATED

6S

SD-65741-01-E30

CIRCUIT REQUIREMENTS

DRAWING ISSUE: 1 P.D. M.P. | 2B EH EJD | 16D JAS V.F. 10-8-69

APPARATUS DESIG	APPARATUS CODE	APPARATUS OPTION	APPARATUS FIG.	MECH REQT BSP FIG.	MECH REQT CONT PRESS.	MECH REQT ARM. TRVL.	CIRCUIT PREPARATION BLOCK OR INSULATE	CIRCUIT PREPARATION TEST CLIP DATA CONN BAT.	CIRCUIT PREPARATION TEST CLIP DATA CONN GRD	TEST SET PREP	SEE TEST NOTE	DIRECT CURRENT FLOW REQT TEST WDG	DIRECT CURRENT FLOW REQT TEST FOR	DIRECT CURRENT FLOW REQT AFTER SOAK MA.	DIRECT CURRENT FLOW REQT TEST MA.	DIRECT CURRENT FLOW REQT READJ MA.	REMARKS
MAGNETS																	
0	324AJ,	ZZ	12														
THM	324--	YA		6A					R(THM-)	GRD	1,2,3		0		31.5	30	
00-09	XBR SW								R(THM-)	GRD	4		0		75	71	
HOLD																	
SM				101					LT MAG	GRD			0		36.5	34.5	
00-09									OR TST								
SEL									RB								
1	324AJ,	ZZ	13														
THM	324--	YA		6A					R(THM-)	GRD	1,5		0		31.5	30	
10-19	XBR SW								R(THM-)	GRD	6		0		75	71	
HOLD																	
SM				101					LT MAG	GRD			0		36.5	34.5	
10-19									OR TST								
SEL									RB								
2	324AJ,	ZY	14														
LHM	324--	ZX		6A					R(LHM-)	GRD	1		0		31.5	30	
20-29	XBR SW																
HOLD																	
SM				101					LT MAG	GRD			0		36.5	34.5	
20-29									OR TST								
SEL									RB								
3	324AJ,	ZY	14														
LHM	324--	ZX		6A					R(LHM-)	GRD	1		0		31.5	30	
30-39	XBR SW								R(LHM-)	GRD	7		0		62	59	
HOLD																	
SM				101					LT MAG				0		36.5	34.5	
30-39									OR TST								
SEL									RB								
4	324AJ,	ZY	13														
LHM	324--	ZX		6A					R(LHM-)	GRD	1		0		31.5	30	
40-49	XBR SW								R(LHM-)	GRD	7		0		62	59	
HOLD																	
SM				101					LT MAG				0		36.5	34.5	
40-49									OR TST								
SEL									RB								
5	324AJ,	ZY	13														
LHM	324--	ZX		6A					R(LHM-)	GRD	1		0		31.5	30	
50-59	XBR SW								R(LHM-)	GRD	7		0		62	59	
HOLD																	
SM				101					LT MAG				0		36.5	34.5	
50-59									OR TST								
SEL									RB								

TEST NOTES:

1. SEE BSP FOR DEFINITION OF OPERATE.
2. WHEN TESTING HOLD MAGS: (THM00-04) MAKE BUSY THE ASSOCIATED CENTRAL OFFICE TRUNK AND INSULATE 6(HM) OF THE ASSOCIATED CENTRAL OFFICE TRUNK.
3. WHEN TESTING HOLD MAGS. (THM05) & (THM06) MAKE BUSY THE ASSOCIATED ATTENDANTS TRUNK AND INSULATE 6(AC) OF THE ASSOCIATED ATTENDANT'S TRUNK.
4. PAR. COMB (THM08) & (THM09). WHEN TESTING HOLD MAGS. (THM08) & (THM09) BLOCK (RA0A) NO. & (RA0B) NO.
5. WHEN TESTING HOLD MAGS. (THM10-15) BLOCK RELAY (JTA) NO. WHEN TESTING HOLD MAGS. (THM16) & (THM17) BLOCK RELAY (JTB) NO.
6. PAR. COMB. (THM18) & (THM19). WHEN TESTING HOLD MAGS. (THM18) & (THM19) BLOCK (RA1A) NO. & (RA1B) NO.
7. PAR. COMB. (LHM-) AND (CO-) FOR USE WHEN "Y" OPTION IS PROVIDED.

(22 PAGES) PAGE 1

PBX SYSTEMS
NO. 756A
LINE, LINK AND MARKER CIRCUIT

SD-65741-01- F1

BELL TELEPHONE LABORATORIES, INC

PRINTED IN U.S.A.

SD-65741-01-F1

22

CIRCUIT REQUIREMENTS

DRAWING ISSUE: 1 P.D. M.P. W/S | 2B EH EJD W P | 16B JAS V.F. 10-8-69 | WORN DRAWING REPRODUCED WITHOUT CHANGE 12-27-69 PD

APPARATUS DESIG	APPARATUS CODE	APPARATUS OPTION	APPARATUS FIG.	MECH REQT BSP FIG.	MECH REQT CONT PRESS.	MECH REQT ARM. TRVL.	CIRCUIT PREPARATION BLOCK OR INSULATE	CIRCUIT PREPARATION TEST CLIP DATA CONN BAT.	CIRCUIT PREPARATION TEST CLIP DATA CONN GRD	TEST SET PREP	SEE TEST NOTE	DIRECT CURRENT FLOW REQT TEST WDG	DIRECT CURRENT FLOW REQT TEST FOR	DIRECT CURRENT FLOW REQT AFTER SOAK MA.	DIRECT CURRENT FLOW REQT TEST MA.	DIRECT CURRENT FLOW REQT READJ MA.	REMARKS
6	324AJ,	ZW	12														
LHM	324--	ZY		6A					R(LHM-)	GRD	1		0		31.5	30	
60-69	XBR SW								R(LHM-)	GRD	2		0		62	59	
HOLD																	
SM				101					LT MAG				0		36.5	34.5	
60-69									OR TST								
SEL									RB								
7	324AJ,	ZW	12														
LHM	324--	ZY		6A					R(LHM-)	GRD	1		0		31.5	30	
70-79	XBR SW								R(LHM-)	GRD	2		0		62	59	
HOLD																	
SM				101					LT MAG				0		36.5	34.5	
70-79									OR TST								
SEL									RB								
8	324AJ,	ZZ	12														
THM	324--	YA		6A					R(THM-)	GRD	1,3,4,5		0		31.5	30	
80-89	XBR SW																
HOLD																	
SM				101					LT MAG				0		36.5	34.5	
80-89									OR TST								
SEL									RB								

TEST NOTES:

1. SEE BSP FOR DEFINITION OF OPERATE.
2. PAR. COMB. (LHM-) AND (CO-) FOR USE WHEN "Y" OPTION IS PROVIDED.
3. WHEN TESTING HOLD MAGS. (THM85-89) MAKE BUSY THE ASSOCIATED CENTRAL OFFICE TRUNK AND INSULATE 6(HM) OF THE ASSOCIATED CENTRAL OFFICE TRUNK.
4. WHEN TESTING HOLD MAG. (THM80) MAKE BUSY THE ASSOCIATED ATTENDANT'S TRUNK AND INSULATE 6(AC) OF THE ASSOCIATED ATTENDANT'S TRUNK.
5. WHEN TESTING HOLD MAGS. (THM81-84) BLOCK RELAY (JTB) NO.

(22 PAGES) PAGE 2

PBX SYSTEMS
NO. 756A
LINE, LINK AND MARKER CIRCUIT (2)

16

SD-65741-01- F1

BELL TELEPHONE LABORATORIES, INC

SIZE 6S

PRINTED IN U.S.A.

CIRCUIT REQUIREMENTS

NO. 756A LINE, LINK AND MARKER CIRCUIT

APPARATUS DESIG	APPARATUS CODE	APPARATUS OPTION	APPARATUS FIG.	MECH REQT BSP FIG.	MECH REQT CONT PRESS.	MECH REQT ARM. TRVL.	CIRCUIT PREPARATION BLOCK OR INSULATE	TEST CLIP DATA CONN BAT.	TEST CLIP DATA CONN GRD	TEST SET PREP	SEE TEST NOTE	DIRECT CURRENT FLOW REQT TEST WDG.	DIRECT CURRENT FLOW REQT TEST FOR	DIRECT CURRENT FLOW REQT AFTER SOAK MA.	DIRECT CURRENT FLOW REQT TEST MA.	DIRECT CURRENT FLOW REQT READJ MA.	REMARKS
RELAYS																	
A	AF79	20	20	205				L REL	U REL	B/G			O		9.7	9.2	
								UNDER TST	UNDER TST				NO		4.3.	4.5	
AO	1/2AK6	UC	4	2					1U(AO)	GRD			0		29.	27.5	MOUNTED WITH (B1)
ACA	AJ54		7	306				L(ACA)	U(ACA)	B/G			0		38	36	STRAP CONTACTS 3 AND 5
							(DCKA)C	L(ACA)	U(ACA)	B/G			NO		21	22.5	(ACA)
ACB	AJ54		7	306				L(ACB)	U(ACB)	B/G			0		38.	36.	STRAP CONTACTS 3 AND 5
							(DCKA)O	L(ACB)	U(ACB)	B/G			NO		21	22.5	(ACB)
ALBA	AJ54.		9,22	306			(COSA)NO (BTTA)NC (ACA) NO 1(ALBA)	L(ALBA)	U(ALBA)	B/G			0		38.	36.	STRAP CONTACTS 3 AND 5 (ALBA)
								L(ALBA)	U(ALBA)	B/G			NO		21	22.5	
ALBB	AJ54		9,22	306			(COSB)NO (BTTB)NC (ACB)NO 1(ALBB)	L(ALBB)	U(ALBB)	B/G			0		38.	36.	STRAP CONTACTS 3 AND 5 (ALBB)
								L(ALBB)	U(ALBB)	B/G			NO		21.	22.5	
ARBA	AF55		4	26			11(RAOB) 1,2(ARBA)	L(ARBA)	U(ARBA)	B/G			0		37	35	STRAP CONTACTS 4 AND 10 (ARBA)
ARBB	AF55		4	26			9(RAOB) 1,2(ARBB)	L(ARBB)	U(ARBB)	B/G			0		37	35	STRAP CONTACTS 4 AND 10 (ARBB)
ATB	1/2AK37	UC	4	201					1U(ATB)	GRD			0		14.2	13.5	MOUNTED WITH(INT)
B	AF79	20	20	205				L REL	U REL	B/G			O		9.7	9.2	
								UNDER TST	UNDER TST				NO		4.3	4.5	
B1	1/2AK6	UC	4	2					1L(B1)	GRD			0		29	27.5	MOUNTED WITH(AO)
BSYA	AJ54		7	306			(BYA) NO 4,10,11,12 (BSYA) 2(BSYA)	L(BSYA)	U(BSYA)	B/G			0		38	36	STRAP CONTACT 5(BSYA)
BSYAA	AJ54		8	306			2,12(BSYAA)	L(BSYAA)	U(BSYAA)	B/G			0		38	36	
							2(BSYBA)	L(BSYAA)	U(BSYAA)	B/G			NO		21	22.5	
BSYB	AJ54		7	306			12(BSYAA)	L(BSYB)	U(BSYB)	B/G			O		38	36.	STRAP CONTACT 5(BSYB)
							(BYB)NO 4,10,11,12 (BSYB)	L(BSYB)	U(BSYB)	B/G			NO		21	22.5	
BSYBA	AJ54		8	306			2,12(BSYBA)	L(BSYBA)	U(BSYBA)	B/G			O		38	36	
							12(BSYAA)	L(BSYBA)	U(BSYBA)	B/G			NO		21	22.5	
BTCA	AF55		8	26			(BTTA)NO 2,4,11, 12(BTCA)	L(BTCA)	U(BTCA)	B/G	1		0		37.	35	
BTCB	AF55		8	26			(BTTB)NO 2,4,11. 12(BTCB)	L(BTCB)	U(BTCB)	B/G	1		O		34.5	32.5	
BTTA	AJ12		8	220			(ALBA)NO (NAA)NO 1,10,11(BTTA) 10(COTA) (BTCA)NO	L(BTTA)	U(BTTA)	B/G			0		42.5	40.5	STRAP CONTACTS 3,4,5,7,8 AND 9(BTTA)
BTTB	AJ12		8	220			(ALBB)NO (NCB)NO 1,10,11(BTTB) 10(COTB) (BTCB)NO	L(BTTB)	U(BTTB)	B/G			0		42.5	40.5	STRAP CONTACTS 3,4,5,7,8 AND 9(BTTB)
BTTC	1/2AK7	XA	8	203					1L(BTTC)	GRD			0		27	25.5	MOUNTED WITH (CCC)
													R		10.5	11	
BYA	AF64		7	219			2,5,6,11, 12(BYA)		U(BYA)	GRD			0		11.2	10.6	
BYB	AF64		7	219			2,5,6,11, 12(BYB)		U(BYB)	GRD			0		11.2	10.6	
CCC	1/2AK7	XA	8	203					1U(CCC)	GRD			0		27	25.5	MOUNTED WITH (BTTC)
													R		10.5	11	
CD20	EA43	XW,Y	3	11/11	H				1B(CO)	GRD			0		10.2	9.7	
CO79		XX											NO		3.8	4.0	

DRAWING ISSUE: i 2B 11B 23D 24D 27D 30D 33D 35D 36B

1. IF OPTION WZ IS PROVIDED (ISSUE 36B), INSULATE 10M OF (BTC-) INSTEAD OF CONTACT 2.

(22 PAGES) PAGE 3

LINE, LINK AND MARKER CIRCUIT | SD-65741-01-F2

BELL TELEPHONE LABORATORIES, INC

CIRCUIT REQUIREMENTS

APPARATUS DESIG	APPARATUS CODE	APPARATUS OPTION	APPARATUS FIG.	MECH REQT BSP FIG.	MECH REQT CONT PRESS.	MECH REQT ARM. TRVL.	CIRCUIT PREPARATION BLOCK OR INSULATE	TEST CLIP DATA CONN BAT.	TEST CLIP DATA CONN GRD	TEST SET PREP	SEE TEST NOTE	DIRECT CURRENT FLOW REQT TEST WDG.	DIRECT CURRENT FLOW REQT TEST FOR	DIRECT CURRENT FLOW REQT AFTER SOAK MA.	DIRECT CURRENT FLOW REQT TEST MA.	DIRECT CURRENT FLOW REQT READJ MA.	REMARKS
COA	AJ12		8	220			7(LEAA) 10(COTA) 6,7,9,12 (COA) (COAA) NO	L(COA)	U(COA)	B/G			0		42 5	40.5	WDG ALONE
													0		95	90	PAR COMB. (COA) & (COAA) STRAP CONTACTS 3,5,6,7. AND 11(COA)
COAA	AJ202		8	500			7(LEAA) 10,12(COTA) (COA) NO 4,8,9,10,11,12 13,24(COAA)	L(COAA)	U(COAA)	B/G			0		42.5	40.5	WDG ALONE
													0		95	90	PAR COMB. (COA) & (COAA)
COAL	1/2 AK24	WT	11	12			1,4,5(COAL)		2L(COAL)	GRD			0		7.8	7.4	MOUNTED WITH XCAL
COB	AJ12		8	220									0		42.5	40.5	WDG ALONE
							8(LEAA) 10(COTB) 6,7,9,12 (COB) (COBA) NO	L(COB)	U(COB)	B/G			0		95	90	PAR COMB. (COB) & (COBA) STRAP CONTACTS 3,5,6,7 AND 11 (COB)
COBA	AJ202		8	500									0		42.5	40.5	WDG ALONE
							8(LEAA) 10,12(COTB) (COB) NO 4,8,9,10,11, 12,13,24 (COBA)	L(COBA)	U(COBA)	B/G			0		95	90	PAR COMB. (COB) & (COBA)
CONA	AF132		8	61									0		34.5	32.5	WDG ALONE
CONAA	AF132	WS	8	61			*	L(CONA)	U(CONA)	B/G	2		0		76.5	72.5	PAR COMB. (CONA) & (CONAA)
CONAA	AJ15	WT	8	249			**	L(CONA)	U(CONA)	B/G	1,2		0		84.8	80.8	PAR COMB.(CONA) & (CONAA)
CONB	AF132		8	61									0		34.5	32.5	WDG ALONE
CONBA	AF132	WS	8	61			***	L(CONB)	U(CONB)	B/G	2		0		76.5	72.5	PAR COMB(CONB) & (CONBA)
CONBA	AJ15	WT	8	249			****	L(CONB)	U(CONB)	B/G	1,2		0		84.8	80.8	PAR COMB(CONB) & (CONBA)
COS	B98		9	7		35	4,17 (COAA) 4,17 (COBA) (COSA)NO (COSB)NO	17(COAA) 17(COAA)	4(COAA) 4(COAA)	B/G B/G			0 R		4.2 2.3	4 2.5	
COSA	AG10		9	358			(ALBA)NO (COTA)NC (COAA)NO (COS)NO 1(COSA)	L(COSA) L(COSA) L(COSA)		BAT. BAT. BAT.			0 H R	30 30 30	10.8 2.3 1.2	10.2 2.1 1.4	
COSB	AG10		9	358			(ALBB)NO (COTB)NO (COAA)NO (COS)NO 1(COSB)	L(COSB) L(COSB) L(COSB)		BAT. BAT. BAT.			0 H R	30 30 30	10.8 2.3 1.2	10.2 2.1 1.4	
COSA	AJ68		22	277			*****		U(COSA)	GRD			0		28.4	27	
									U(COSA)	GRD			NO		18	19	
COSB	AJ68		22	277			******		U(COSB)	GRD			0		28.4	27	
									U(COSB)	GRD			NO		18	19	

TEST NOTES:

1. STRAP L OF (CON-) & (CON-A) AND STRAP U OF (CON-) & (CON-A).
2. IF OPTION WX IS PROVIDED (ISSUE 36B), 11 OF (CON-) NEED NOT BE INSULATED.

* 7(LEBA) 1,2,8,10,11, 12(CONA) 2,3,4,5,7,8, 9,10,11, 12(CONAA)
** 7, (LEAA) 1, 2 ,8,9,10,11, 12(CONA) 1,2,3,4,8,9,10,11,12 (CONAA) 7,(LEBA)
*** 8(LEBA) 1,2,8,10,11,12 (CONB) 2,3,4,5,7,8,9,10,11,12 (CONBA)
**** 8,(LEAA) 8 (LEBA) 1,2,8,9,10 ,11,12(CONB) 1,2,3,4,8,9,10,11,12 (CONBA)
***** (ALBA) NO, (COTA) NO, (COAA) NO, (XC) NO
****** (ALBB) NO, (COTB) NO, (COBA) NO, (XC) NO

DRAWING ISSUE: 1 2B 11B 23D 24D 27D 30D 33D 35D 36B

(22 PAGES) PAGE 4

ISSUE 48B

LINE, LINK, AND MARKER CIRCUIT (2) | SD-65741-01-F2

BELL TELEPHONE LABORATORIES, INC | 65

CIRCUIT REQUIREMENTS

APPARATUS DESIG	APPARATUS CODE	APPARATUS OPTION	APPARATUS FIG.	MECH REQT BSP FIG.	MECH REQT CONT PRESS.	MECH REQT ARM. TRVL.	CIRCUIT PREPARATION BLOCK OR INSULATE	CIRCUIT PREPARATION TEST CLIP DATA CONN BAT.	CIRCUIT PREPARATION TEST CLIP DATA CONN GRD	TEST SET PREP	SEE TEST NOTE	DIRECT CURRENT FLOW REQT TEST WDG	DIRECT CURRENT FLOW REQT TEST FOR	DIRECT CURRENT FLOW REQT AFTER SOAK MA.	DIRECT CURRENT FLOW REQT TEST MA.	DIRECT CURRENT FLOW REQT READJ MA.	REMARKS
COTA	AF55		8	26			18(RPA0) 18(RPA1) 8,10 (COTA)	L(COTA)		BAT.			0		37	35	STRAP CONTACT 7 (COTA)
COTB	AF55		8	26			17(RPA0) 17(RPA1) 8,10 (COTB)	L(COTA)		BAT.			0		37	35	STRAP CONTACT 7 (COTB)
DCKA	AF10		8	214			(RLAA)NO 12(DCKA) (TOKA)NO 5(RLBA)		U(DCKA) U(DCKA)	GRD GRD			0 NO		7.6 4.2	7.2 4.5	
DCKB	AF10		8	214			(RL3A)NO (TOKB)NO 12(DCKB) 5(RLAA)		U(DCKB) U(DCKB)	GRD GRD			0 NO		7.6 4.2	7.2 4.5	
HCA	AF132		7	61			(BYA)NO (THC2)- (THC7)NO	L(HCA)	U(HCA)	B/G			0		34.5	32.5	
HCB	AF132		7	61			(BYB)NO (THC2)- (THC7)NO	L(HCB)	U(HCB)	B/G			0		34.5	32.5	
HMKA	AF88		7	42			4(SOA) 4(SMTA) (TRKA)NO (TRKAA) NO (JTAA)NO (COTA)NO (BTTA)NO (DCKA)O		U(HMKA) U(HMKA)	GRD GRD			0 NO		33.5 12.2	31.5 12.9	STRAP CONTACTS 1 AND 11(HMKA)
HMKB	AF88		7	42			4(SOB) 4(SMTB) (HMTB)NO (TRKB)NO (TRKBA) NO (COTB)NO (BTTB)NO (DCKB)O		U(HMKB) U(HMKB)	GRD GRD			0 NO		33.5 12.2	31.5 12.9	STRAP CONTACTS 1 AND 11(HMKB)
HMTA	AJ62		8	313			(HMTAA)NO 4,10,11 (HMTA) (TRKA)NO (TRKAA)NO	L(HMTA) L(HMTA)	U(HMTA) U(HMTA)	B/G B/G			0 NO		38 21	36 22.5	STRAP CONTACTS 8,9 (HMTA)
HMTAA	AJ54		8	306			(HMTA)NO 1,4,12(HMTAA) (SMTA)NO (ALBA)NO	L(HMTAA) L(HMTAA)	U(HMTAA) U(HMTAA)	B/G B/G			0 NO		38 21	36 22.5	STRAP CONTACTS 5,7 AND 9 (HMTAA)
HMTB	AJ62		8	313			(HMTBA)NO 4,10,11 (HMTB) (TRKB)NO (TRKBA)NO	L(HMTB) L(HMTB)	U(HMTB) U(HMTB)	B/G B/G			0 NO		38 21	36 22.5	STRAP CONTACTS 8, 9 (HMTB)
HMTBA	AJ54		8	306			(HMTB)NO (SMTB)NO (ALBB)NO 1,4,12(HMTBA)	L(HMTBA) L(HMTBA)	U(HMTBA) U(HMTBA)	B/G B/G			0 NO		38 21	36 22.5	STRAP CONTACTS 5, 7 AND 9 (HMTBA)

DRAWING ISSUE

1	P.C. M.R.
2B	F. F&S
5D	DWG. CAD
9B	V.Z. M.S.
11B	D.A. K.L.
12B	A.E.S. W.H.
14B	V.S. J.B.S.
16B	J.D. F.T. R.D.B. W.H.
24D	
35D	F.E.D. F.W. P.H.P.
36B	R.D.Z. P.W.S. L.D.J.

RAC PD P.D.B. P.O.B. T.E.B.

(22 PAGES) PAGE 5

LINE, LINK AND MARKER CIRCUIT	SD-65741-01-F3
BELL TELEPHONE LABORATORIES, INC	PRINTED IN U.S.A.

SD-65741-01-F3

CIRCUIT REQUIREMENTS

APPARATUS DESIG	APPARATUS CODE	APPARATUS OPTION	APPARATUS FIG.	MECH REQT BSP FIG.	MECH REQT CONT PRESS.	MECH REQT ARM. TRVL.	CIRCUIT PREPARATION BLOCK OR INSULATE	CIRCUIT PREPARATION TEST CLIP DATA CONN BAT.	CIRCUIT PREPARATION TEST CLIP DATA CONN GRD	TEST SET PREP	SEE TEST NOTE	DIRECT CURRENT FLOW REQT TEST WDG	DIRECT CURRENT FLOW REQT TEST FOR	DIRECT CURRENT FLOW REQT AFTER SOAK MA.	DIRECT CURRENT FLOW REQT TEST MA.	DIRECT CURRENT FLOW REQT READJ MA.	REMARKS
ICTA	AF140		8	304			2(NCB) 4,8 (ICTA) (TRKA)NO (TRKAA) NO	L(ICTA)	U(ICTA)	B/G			0		9.1	8.6	STRAP CONTACTS 3,5,9 AND 7 (ICTA)
ICTB	AF140		8	304			5(NCA) 5(NCB) 4,8 (ICTB) (TRKB)NO (TRKBB) NO	L(ICTB)	U(ICTB)	B/G			0		9.1	8.6	STRAP CONTACTS 5,7,9 AND 3 (ICTB)
IN8	AF515	UC	4	31					U(IN8)	GRD			0		95	90	
IN20-IN29	AK7		1	203			8(IN-)		2U(IN-) 2U(IN-)	GRD GRD			0 NO		27 10.4	25.5 11	
INT	1/2AK37	UC	4	201				2L(INT)	1L(INT)	B/G			0		23	22	MOUNTED WITH ATB
JR0-JR5	AF132		7	61			4,7,10,11, 12,5(JR)	L(JR-)	U(JR-)	B/G			0		34.5	32.5	
JRAL	AF115		11	274			4(JRAL)		U(JRAL) U(JRAL)	GRD GRD			0 NO		7.1 4.7	6.7 5	
JREA	AJ12		7	220			(TRKA)NO (TRKAA)NO 4,6,10(JREA)	L(JREA)	U(JREA)	B/G			0		42.5	40.5	STRAP CONTACTS 2,3,5,6,7,9 (JREA)
JREB	AJ12		7	220			(TRKB)NO (TRKBA)NO 4,6,10(JREB)	L(JREB)	U(JREB)	B/G			0		42.5	40.5	STRAP CONTACTS 2,3,5,6,7,9 (JREB)
JTA	AF132		7	61			22(RPA0) 22(RPA1) 2,3,4,6, 7,8,9, (JTA) (JTAA)NO	L(JTA)	U(JTA)	B/G			0		34.5	32.5	
JTAA	AJ28		7	257			(JTA)NO 19,11(JTAA)	L(JTAA)	U(JTAA)	B/G	2	S S	0 R		12.4 1.9	11.8 2.	
JTB	AF132		7	61			21(RPA0) 21(RPA1) 2,3,4,6, 7,8,9 (JTB) (JTBA)NO	L(JTB)	U(JTB)	B/G			0		34.5	32.5	
JTBA	AJ28		7	257			(JTB)NO 19,11(JTBA)	L(JTBA)	U(JTBA)	B/G	2	S S	0 R		12.4 1.9	11.8 2.	
L20-L29	AF141		1	225	H		4(L) 4(L)	1L(L) 1L(L)	2U(L) 2U(L) 2U(L)	M M GRD	1 1 1	P/S P/S S	0 NO NO		17 11 23.5	16 11.5	
L30-L59	EA26	K	1,2	4/-	H		2T(L) 2T(L)		3RT(L) 3RT(L)	GRD GRD	1 1		0 NO		22 17	21 18	
L30-L59	EA44	G	1,2	4/-	H		2T(L) 2T(L)		3RT(L) 3RT(L)	GRD GRD	1 1		0 NO		22 17	21 18	
L60-L79	EA26	F	2	4/-	H		2T(L) 2T(L)		3RT(L) 3RT(L)	GRD GRD	1 1		0 NO		22 17	21 18	
L60-L79	EA44	E	2	4/-	H		2T(L) 2T(L)		3RT(L) 3RT(L)	GRD GRD	1 1		0 NO		22 17	21 18	
LAL1	AF85		11	401			3(LAL1)		U(LAL1) U(LAL1) U(LAL1)	GRD GRD GRD			0 NO R		36 22.5 9.9	34 23.5 10.5	

TEST NOTES:

1. BLOCK ASSOCIATED LINE HOLD MAGNET OFF-NORMAL SPRINGS OPERATED.
2. IF OPTION WX IS PROVIDED (ISSUE 36B), ALSO INSULATE 2 OF (JT-A).

DRAWING ISSUE

1	P.C. M.R.
2B	F. F&S
5D	DWG. CAD
9B	V.Z. M.S.
11B	D.A. K.L.
12B	A.E.S. W.H.
14B	V.S. J.B.S.
16B	J.D. F.T. R.D.B. W.H.
24D	S.A. K.E.
35D	F.E.D. F.W. P.H.P.
36B	R.D.Z. P.W.S. L.D.J.

(22 PAGES) PAGE 6

LINE, LINK, AND MARKER CIRCUIT (2)	ISSUE 48B SD-65741-01-F3
BELL TELEPHONE LABORATORIES, INC	DWG SIZE 6S PRINTED IN U.S.A.

CIRCUIT REQUIREMENTS

DRAWING ISSUE: 12B NC WM P.O.B. | 33D FED RHP

APPARATUS DESIG	APPARATUS CODE	APPARATUS OPTION	APPARATUS FIG.	MECH REQT BSP FIG.	MECH REQT CONT PRESS.	MECH REQT ARM TRVL.	CIRCUIT PREPARATION BLOCK OR INSULATE	TEST CLIP DATA CONN BAT.	TEST CLIP DATA CONN GRD	TEST SET PREP	SEE TEST NOTE	DIRECT CURRENT FLOW REQT TEST WDG	TEST FOR	AFTER SOAK MA.	TEST MA.	READJ MA.	REMARKS
LAL2	AF85		11	401			3(LAL2)		U(LAL2)	GRD			0		36	34	
									U(LAL2)	GRD			NO		22.5	23.5	
									U(LAL2)	GRD			R		9.9	10.5	
LAL2A	AF85		11	401			3(LAL2A)		U(LAL2A)	GRD			0		36	34	
									U(LAL2A)	GRD			NO		22.5	23.5	
									U(LAL2A)	GRD			R		9.9	10.5	
LBA	AJ27		9,22	213			(LTA)NO (COA)NO (ALBA)NO	L(LBA) L(LBA)		BAT.			0 NO		14.9 8.1	14.2 8.6	STRAP CONTACTS 4,5 & 7(LBA) WITH ZN OPTION
							(LTA)NO (COA)NO (LSHA)NO 12(LBA)		U(LBA) U(LBA)	GRD GRD			0 NO		14.9 8.1	14.2 8.6	STRAP CONTACTS 5,7(LBA) WITH ZO OPTION
LBB	AJ27		9,22	213			('TB)NO (COB)NO (ALBB)NO	L(LBB) L(LBB)		BAT.			0 NO		14.9 8.1	14.2 8.6	STRAP CONTACTS 4,5 & 7(LBB) WITH ZN OPTION
							(LTB)NO (COB)NO (LSHB)NO 12(LBB)		U(LBB) U(LBB)	GRD GRD			0 NO		14.9 8.1	14.2 8.6	STRAP CONTACTS 5,7(LBB) WITH ZO OPTION
LCK1	1/2 AK4		9,22	202			8(LEA) 8(LEB) 8,9,12(LCK1)	1U(LCK1)	2U(LCK1)	B/G			0		11.9	11.3	MOUNTED WITH LCK2
LCK2	1/2 AK4		9,22	202			1,5(LCK2)		2L(LCK2)	GRD			0		11.9	11.3	MOUNTED WITH LCK1
LEA	AF55		9,22	26			(LTAA)NO 2,19(COBA) (COSA)NO 11,12(LEA) (LEAA)NO (COSA)NO	L(LEA)	U(LEA)	B/G			0 0		37 82	35 78	WDG ALONE PAR. COMB. (LEA) & (LEAA) STRAP CONTACTS 4 & 7(LEA)
LEAA	AJ12		9,22	220									0		42.5	40.5	WDG ALONE
							(LTAA)NO 2,19(COBA) (LEA)NO (COAA)NO	L(LEAA)	U(LEAA)	B/G			0		95	90	PAR. COMB. (LEAA) & (LEA) STRAP CONTACTS 4,7,8 & 10(LEAA)
LEB	AF55		9,22	26									0		37	35	WDG ALONE
							(LTBA)NO 3,18(COAA) (LEBA)NO (COSB)NO 11,12(LEB) (COBA)NO	L(LEB)	U(LEB)	B/G			0		82	78	PAR. COMB. (LEB) & (LEBA) STRAP CONTACTS 4 & 7(LEB)
LEBA	AJ12		9,22	220									0		42.5	40.5	WDG ALONE
							(LTBA)NO 3,18(COAA) (LEB)NO (COBA)NO	L(LEBA)	U(LEBA)	B/G			0		95	90	PAR. COMB. (LEBA) & (LEB) STRAP CONTACTS 4,7,8 AND 10(LEBA)
LSHA	AF113	Z0	9,22	273			(LBA)NO (ALBA)NO (LTCA)NO (LEA)NO (LEAA)NO 6(LSHA)		U(LSHA)	GRD			0		8.7	8.2	STRAP CONTACT 9(LSHA)
LSHB	AF113	Z0	9,22	273			(LBB)NO (ALBB)NO (LTCB)NO (LEB)NO (LEBA)NO 6(LSHB)		U(LSHB)	GRD			0		8.7	8.2	STRAP CONTACT 9(LSHB)
LT2	280EE		9	8			3(TRLB) 2(CONAA) 2(CONBA) 2(LTA) 2(LTB) (LTS2)NO	2(CONAA) 2(CONAA) 2(CONAA) 3(TRLB) 3(TRLB) 3(TRLB)	3(TRLB) 3(TRLB) 3(TRLB) 2(LTA) 2(LTA)	B/G B/G B/G B/G B/G B/G	P P P P S S	0 NO 0 NO 0 NO	-40 -40 -40 -40	6.4 3.5 9.9 4.7	0.9 0.6 6.1 3.7	
LT2	W68		22	277			1,2,4,6,8,10,12 (LT2),1(CONAA)	L(LT2) L(LT2)	U(LT2) U(LT2)	B/G B/G			0 NO		28.4 18	27 19	

LINE, LINK, AND MARKER CIRCUIT — SD-65741-01-F4

BELL TELEPHONE LABORATORIES INCORPORATED — PRINTED IN U.S.A.

CIRCUIT REQUIREMENTS

DRAWING ISSUE: 12B NC WM POB | 33D FED PUSH RHP

APPARATUS DESIG	APPARATUS CODE	APPARATUS OPTION	APPARATUS FIG.	MECH REQT BSP FIG.	MECH REQT CONT PRESS.	MECH REQT ARM TRVL.	CIRCUIT PREPARATION BLOCK OR INSULATE	TEST CLIP DATA CONN BAT.	TEST CLIP DATA CONN GRD	TEST SET PREP	SEE TEST NOTE	DIRECT CURRENT FLOW REQT TEST WDG	TEST FOR	AFTER SOAK MA.	TEST MA.	READJ MA.	REMARKS
LT3	280EE		9	B			4(TRLB) 3(CONAA) 3(CONBA) 3(LTA) 3(LTB) (LTS3)NO	3(CONAA) 3(CONAA) 3(CONAA) 3(CONAA) 4(TRLB) 4(TRLB)	4(TRLB) 4(TRLB) 4(TRLB) 4(TRLB) 3(LTA) 3(LTA)	B/G B/G B/G B/G B/G B/G		P P P P S S	0 NO 0 NO 0 NO	-40 -40 -40	6.4 3.5 9.9 4.7	0.9 0.6 6.1 3.7	
LT3	AJ68		22	277			1,2,4,6,8,10,12 (LT3)2(CONAA)	L(LT3) L(LT3)	U(LT3) U(LT3)	B/G B/G			0 NO		28.4 18	27 19	
LT4	280EE		9	B			6(TRLB) 4(CONAA) 4(CONBA) 4(LTA) 4(LTB) (LTS4)NO	4(CONAA) 4(CONAA) 4(CONAA) 4(CONAA) 6(TRLB) 6(TRLB)	6(TRLB) 6(TRLB) 6(TRLB) 6(TRLB) 4(LTA) 4(LTA)	B/G B/G B/G B/G B/G B/G		P P P P S S	0 NO 0 NO 0 NO	-40 -40 -40	6.4 3.5 9.9 4.7	0.9 0.6 6.1 3.7	
LT4	AJ68		22	277			1,2,4,6,8,10,12 (LT4)3(CONAA)	L(LT4) L(LT4)	U(LT4) U(LT4)	B/G B/G			0 NO		28.4 18	27 19	
LT5	280EE		9	B			7(TRLB) 5(CONAA) 5(CONBA) 5(LTA) 5(LTB) (LTS5)NO	5(CONAA) 5(CONAA) 5(CONAA) 5(CONAA) 7(RLB) 7(RLB)	7(TRLB) 7(TRLB) 7(TRLB) 7(TRLB) 5(LTA) 5(LTA)	B/G B/G B/G B/G B/G B/G		P P P P S S	0 NO 0 NO 0 NO	-40 -40 -40	6.4 3.5 9.9 4.7	0.9 0.6 6.1 3.7	
LT5	AJ68		22	277			1,2,4,6,8,10,12 (LT5)4(CONAA)	L(LT5) L(LT5)	U(LT5) U(LT5)	B/G B/G			0 NO		28.4 18	27 19	
LT6	280EE		9	B			3(TRLA) 7(CONAA) 7(CONBA) 7(LTA) 7(LTB) (LTS6)NO	7(CONAA) 7(CONAA) 7(CONAA) 7(CONAA) 3(TRLA) 3(TRLA)	3(TRLA) 3(TRLA) 3(TRLA) 3(TRLA) 7(LTA) 7(LTA)	B/G B/G B/G B/G B/G B/G		P P P P S S	0 NO 0 NO 0 NO	-40 -40 -40	6.4 3.5 9.9 4.7	0.9 0.6 6.1 3.7	
LT6	AJ68		22	277			1,2,4,6,8,10,12 (LT6)9(CONAA)	L(LT6) L(LT6)	U(LT6) U(LT6)	B/G B/G			0 NO		28.4 18	27 19	
LT7	280EE		9	B			4(TRLA) 9(CONAA) 9(CONBA) 9(LTA) 9(LTB) (LTS7)NO	9(CONAA) 9(CONAA) 9(CONAA) 9(CONAA) 4(TRLA) 4(TRLA)	4(TRLA) 4(TRLA) 4(TRLA) 4(TRLA) 9(LTA) 9(LTA)	B/G B/G B/G B/G B/G B/G		P P P P S S	0 NO 0 NO 0 NO	-40 -40 -40	6.4 3.5 9.9 4.7	0.9 0.6 6.1 3.7	
LT7	AJ68		22	277			1,2,4,6,8,10,12 (LT7)10(CONAA)	L(LT7) L(LT7)	U(LT7) U(LT7)	B/G B/G			0 NO		28.4 18	27 19	
LT8	280EE		9	B			6(TRLA) 10(CONAA) 10(CONBA) 10(LTA) 10(LTB) (LTS8)NO	10(CONAA) 10(CONAA) 10(CONAA) 10(CONAA) 6(TRLA) 6(TRLA)	6(TRLA) 6(TRLA) 6(TRLA) 6(TRLA) 10(LTA) 10(LTA)	B/G B/G B/G B/G B/G B/G		P P P P S S	0 NO 0 NO 0 NO	-40 -40 -40	6.4 3.5 9.9 4.7	0.9 0.6 6.1 3.7	
LT8	AJ68		22	277			1,2,4,6,8,10,12 (LT8)11(CONAA)	L(LT8) L(LT8)	U(LT8) U(LT8)	B/G B/G			0 NO		28.4 18	27 19	
LT9	280EE		9	B			7(TRLA) 11(CONAA) 11(CONBA) 11(LTA) 11(LTB) (LTS9)NO	11(CONAA) 11(CONAA) 11(CONAA) 11(CONAA) 7(TRLA) 7(TRLA)	7(TRLA) 7(TRLA) 7(TRLA) 7(TRLA) 11(LTA) 11(LTA)	B/G B/G B/G B/G B/G B/G		P P P P S S	0 NO 0 NO 0 NO	-40 -40 -40	6.4 3.5 9.9 4.7	0.9 0.6 6.1 3.7	
LT9	AJ68		22	277			1,2,4,6,8,10,12 (LT9)12(CONAA)	L(LT9) L(LT9)	U(LT9) U(LT9)	B/G B/G			0 NO		28.4 18	27 19	
LTA	AF132		9	61			10(LEAA) (LTCA)NO 2,3,4,5,7,8,9, 10,11(LTA)	L(LTA)	U(LTA)	B/G			0		34.5	32.5	
LTA	AJ15		22	249			10(LEAA) 1-12(LTA)	L(LTA)	U(LTA)	B/G			0		42.5	40.5	
LTAA	AJ12		9,22	220			10(LEAA) (RGA)NO (JREA)NO 2,3,4,7 (LTAA)	L(LTAA)		BAT.			0		42.5	40.5	
LTB	AF132		9	61			10(LEBA) (LCTB)NO 2,3,4,5,7,8 9,10,11(LTB)	L(LTB)	U(LTB)	B/G			0		34.5	32.5	
LTB	AJ15		22	249			10(LEBA) 1-12(LTB)	L(LTB)	U(LTB)	B/G			0		42.5	40.5	
LTBA	AJ12		9,22	220			10(LEBA) (RGB)NO (JREB)NO 2,3,4,7(LTBA)	L(LTBA)		BAT.			0		42.5	40.5	
LTCA	AJ202		9	500			(LTA)NO (CONA)NO	L(LTCA)	U(LTCA)	B/G			0		42.5	40.5	
LTCA	AF24		22	8			(LTA)NO (CONA)NO 1-8(LTCA)	L(LTCA)	U(LTCA)	B/G			0		30.5	29	
LTCB	AJ202		9	500			(LTB)NO (CONB)NO	L(LTCB)	U(LTCB)	B/G			0		42.5	40.5	
LTCB	AF24		22	8			(LTB)NO (CONB)NO 1-8(LTCB)	L(LTCB)	U(LTCB)	B/G			0		30.5	29	

LINE, LINK, AND MARKER CIRCUIT (2) — SD-65741-01-F4

BELL TELEPHONE LABORATORIES INCORPORATED — 6S — PRINTED IN U.S.A.

CIRCUIT REQUIREMENTS

APPARATUS DESIG	APPARATUS CODE	APPARATUS OPTION	APPARATUS FIG.	MECH REQT BSP FIG.	MECH REQT CONT PRESS.	MECH REQT ARM. TRVL	CIRCUIT PREPARATION BLOCK OR INSULATE	CIRCUIT PREPARATION TEST CLIP DATA CONN BAT.	CIRCUIT PREPARATION TEST CLIP DATA CONN GRD	TEST SET PREP	SEE TEST NOTE	DIRECT CURRENT FLOW REQT TEST WDG	TEST FOR	AFTER SOAK MA.	TEST MA.	READJ MA.	REMARKS
LTS2 LTS3	AF94		9	243			3(LT-) 23(COAA) 23(COBA) 12(LTAA) 12(LTBA) 1,2,4,6,10 11,12 (LTS-)	1L(LTS-) 2L(LTS-)	2U(LTS-)	BAT. B/G		P S	0 0		21 12.6	20 12	STRAP CONTACTS 4,7 AND 8(LTS-)
LTS4 LTS5	AF94		9	243			3(LT-) 22(COAA) 22(COBA) 12(LTBA) 1,2,4,6,10 11,12 (LTS-)	1L(LTS-) 2L(LTS-)	2U(LTS-)	BAT. B/G		P S	0 0		21 12.6	20 12	STRAP CONTACTS 4,7 AND 8(LTS-)
LTS6 LTS7	AF94		9	243			3(LT-) 21(COAA) 21(COBA) 8(LTAA) 8(LTBA) 1,2,4,6 10,11,12, (LTS-)	1L(LTS-) 2L(LTS-)	2U(LTS-)	BAT. B/G		P S	0 0		21 12.6	20 12	STRAP CONTACTS 4,7 AND 8(LTS-)
LTS8 LTS9	AF94		9	243			3(LT-) 20(COAA) 20(COBA) 8(LTAA) 8(LTBA) 1,2,4,6 10,11,12 (LTS-)	1L(LTS-) 2L(LTS-)	2U(LTS-)	BAT. B/G		P S	0 0		21 12.6	20 12	STRAP CONTACTS 4,7, AN 8(LTS-)
LUCA	AF132		7	61			8(UEB) 1,2,3,4, 5,6,7,9, 10,11,12 (LUCA)	L(LUCA)	U(LUCA)	B/G			0		34.5	32.5	
LUCB	AF132		7	61			6(UEB) 1,2,3,4, 5,6,7,9, 10,11,12 (LUCB)	L(LUCB)	U(LUCB)	B/G			0		34.5	32.5	
MAL	AF118		11	401			6(MAL)		U(MAL)	GRD			0		14	13.3	
MON2- MON7	AJ5	Y	3	220				L(MON-)		BAT.			0		13.3 95	12.6 90	WDG ALONE PAR COMB. (MON2)-(MON6)
MON A,P,C	AJ205	XW,XX	3					L(MON-)		BAT.			0		170	160	PAR COMB. (MON A,B,C)
MS	1/2AK23	20	20	3					2L REL UNDER TST	GRD			0		7.8	7.4	FOR EVEN NUMBERED CKT. ON UNIT.
MS	1/2AK23	20	20	3					2U REL UNDER TST	GRD			0		7.8	7.4	FOR ODD NUMBERED CKT. ON UNIT.
MTA	AF132		10	61			9(RLB) (TMA)NO 6(MTA)	L(MTA)	U(MTA)	B/G			0		34.5	32.5	
MTB	AF132		10	61			7(RLB) (TMB)NO 6(MTB)	L(MTB)	U(MTB)	B/G			0		34.5	32.5	

DRAWING ISSUE

1	P.C.
2B	E.H. R.S.
11B	A.L. L.K.L. P.O.B.
12B	A.E. W.A. P.O.B.
27D	W.P.A. S.A.K. G.F.H.
30D	T.M.P. P.J.S. G.F.H.
33D	F.E.D. R.H.P.

CIRCUIT REQUIREMENTS

APPARATUS DESIG	APPARATUS CODE	APPARATUS OPTION	APPARATUS FIG.	MECH REQT BSP FIG.	MECH REQT CONT PRESS.	MECH REQT ARM. TRVL	CIRCUIT PREPARATION BLOCK OR INSULATE	CIRCUIT PREPARATION TEST CLIP DATA CONN BAT.	CIRCUIT PREPARATION TEST CLIP DATA CONN GRD	TEST SET PREP	SEE TEST NOTE	DIRECT CURRENT FLOW REQT TEST WDG	TEST FOR	AFTER SOAK MA.	TEST MA.	READJ MA.	REMARKS
NAA	AJ12		10	220			(NCA) NO (MTA) NO 11(NAA)	L(NAA)	U(NAA)	B/G			C	.	42.5	40.5	STRAP CONTACTS 1,3,5,7, (NAA).
NAB	AJ12		10	220			(NCB) NO (MTB) NO 3(NAB)	L(NAB)	U(NAB)	B/G			O		42.5	40.5	STRAP CONTACTS 1,3,5,7,9 AND 11 (NAB).
NCA	AJ3		10	226			7(TAA) (MTA) NO (BTTA) NO	L(NCA)	U(NCA)	B/G			O		18	17	STRAP CONTACTS 1,2,3,4,10 AND 11 (NCA).
NCB	AJ3		10	226			7(TAB) (MTB) NO (BTTB) NO	L(NCB)	U(NCB)	B/G			O		18	17	STRAP CONTACTS 1,2,3,4,10 AND 11 (NCB).
NT	AF88		9,22	42			10,12(NT)	L(NT) L(NT)		BAT. BAT.			O NO		33.5 12.2	31.5 12.9	STRAP CONTACTS 1,3,5,7,9 AND 11 (NT).
OT20-29	AK7		1	203			1,5(OT-) 12(IN-)		2L(OT-) 2L(OT-)	GRD GRD			O NO		27 10.4	25.5 11.	
RO	AJ12		4	220			2,4,5,6 8,10(RO)	L(RO)	U(RO)	B/G	1	P	0		42.5	40.5	STRAP BREAK CONTACTS 2,4, 8 AND 10(RO),
RI	AJ12		4	220			2,4,5,6, 8,10(RI)	L(RI)	U(RI)	B/G	2	P	0		42.5	40.5	STRAP BREAK CONTACTS 2,4, 8 AND 10(RI)
RAOA	AJ5		5	220			(RAOB) NO 2,11 (RAOA)	L(RAOA)	U(RAOA)	B/G	1		0		13.3 29.5	12.6 28	WDG ALONE PAR COMB. (RAOA) & (RAOB) STRAP CONTACTS 6,8,9(RAOA)
RAOB	AF129		5	28			4,6 (RAOB) (RAOA) NO	L(RAOB)	U(RAOB)	B/G	1		0		10 23	9.5 21.5	WDG ALONE PAR COMB. (RAOB) & (RAOA) STRAP CONTACTS 1,3,4,6,9, 10, AND 11(RAOB)
RAIA	AJ5		5	220			(RAIB) NO ,12 (RAIA)	L(RAIA)	U(RAIA)	B/G	2		0		13.3 29.5	12.6 28	WDG ALONE PAR COMB. (RAIA) & (RAIB) STRAP CONTACTS 2, AND 11(RAIA)
RAIB	AF129		5	28			4,6 (RAIB) (RAIA) NO	L(RAIB)	U(RAIB)	B/G	2		0		10 23	9.5 21.5	WDG ALONE PAR COMB. (RAIB) & (RAIA) STRAP CONTACTS 1,3, 9 AND 11(RAIB)
RCAO	AF132		5	61			(RCBO) NO (RCCD) NO (RCDO) NO (RCEO) NO	L(RCAO)	U(RCAO)	B/G	1		0		34.5 201	32.5 192	WDG ALONE PAR COMB. (RCAO), (RCBO), (RCCO), (RCDO), (RCEO)
RCAI	AF132		5	61			(RCBI) NO (RCCI) NO (RCDI) NO (RCEI) NO	L(RCAI)	U(RCAI)	B/G	2		0		34.5 201	32.5 192	WDG ALONE PAR COMB. (RCAI), (RCBI). (RCCI), (RCDI), (RCEI)

TEST NOTES:
1. MAKE REGISTER 0 BUSY.
2. MAKE REGISTER 1 BUSY.

DRAWING ISSUE

1	P.C. M.E. W.S.
2B	E.H. R.S. A.S.C.
11B	A.L. L.K.L. P.O.
12B	A.E. W.A. P.O.B.
27D PMTL	W.P.A. S.A.K. G.F.H.
30D	T.M.P. P.J.S. G.F.H.
33D	F.E.D. R.S. R.H.P.

HW-116

LINE, LINK, AND MARKER CIRCUIT | SD-65741-01-F5 | BELL TELEPHONE LABORATORIES, INC | SIZE 6S | PRINTED IN U.S.A.

LINE, LINK, AND MARKER CIRCUIT | SD-65741-01-F5 | BELL TELEPHONE LABORATORIES, INC | PRINTED IN U.S.A.

SD-65741-01-F5

CIRCUIT REQUIREMENTS

APPARATUS DESIG	APPARATUS CODE	APPARATUS OPTION	APPARATUS FIG.	MECH REQT BSP FIG.	MECH REQT CONT PRESS.	MECH REQT ARM. TRVL.	CIRCUIT PREPARATION BLOCK OR INSULATE	TEST CLIP DATA CONN BAT.	TEST CLIP DATA CONN GRD	TEST SET PREP	SEE TEST NOTE	DIRECT CURRENT FLOW REQT TEST WDG	TEST FOR	AFTER SOAK MA.	TEST MA.	READJ MA.	REMARKS
RCBO	AF111		5	270			(RCAO)NO (RCCO)NO (RCDO)NO (RCEO)NC 5,6,9,10,11, 12(RCBO)	L(RCBO)	U(RCBO)	B/G	1		0		42.5	40.5	WDG ALONE
													0		251	239	PAR COMB. (RCBO), (RCAO), (RCCO), (RCDO), (RCEO) STRAP CONTACTS 7 AND B(RLBO)
RCBI	AF111		5	270													
													0		42.5	40.5	WDG ALONE
							(RCAI)NO (RCCI)NO (RCDI)NO (RCEI)NO 5,6,9,10,11, 12(RCBI)	L(RCBI)	U(RCBI)	B/G	2		0		251	239	PAR COMB. (RCBI), (RCAI), (RCCI), (RCDI), (RCEI) STRAP CONTACTS 7 AND B(RCBI)
RCCO RCDO RCEO	AF132		5	61													
													0		34.5	32.5	WDG ALONE
							OTHER (RC-O)NO	L(RCCO)	U(RCCO)	B/G			0		201	192	PAR COMB. (RCCO), (RCAO), (RCBO), (RCDO), (RCEO)
RCCI RCDI RCEI	AF132		5	61													
													0		34.5	32.5	WDG ALONE
							OTHER (RC-I)NO	L(RCCI)	U(RCCI)	B/G			0		201	192	PAR COMB. (RCCI), (RCAI), (RCBI), (RCDI), (RCEI)
RCKA	AF87		8	240			8(TRA)	L(RCKA)		BAT.			0		14.3	13.6	
								L(RCKA)		BAT.			NO		9	9.5	
RCKB	AF87		8	240			8(TRB)	L(RCKB)		BAT.			0		14.3	13.6	
								L(RCKB)		BAT.			NO		9	9.5	
RCTA	AF24		7	8													
							(RCTAA) NO 1,2,3,4, 5,6,7,8 (RCTA) 7(TRCA)	L(RCTA)	U(RCTA)	B/G			0		30.5	29	WDG ALONE
													0		68	64.5	PAR.COMB. (RCTA) & (RCTAA)
RCTAA	1/2AK6		7	2													
							(RCTA)NO 1,3(RCTAA) 7(TRCA)	1L(RCTAA)	2L(RCTAA)	B/G			0		29	27.5	WDG ALONE
													0		62	59	PAR COMB. (RCTAA) & (RCTA) STRAP CONTACT 4(RCTAA) MOUNTED WITH (SEAA)
RCTB	AF24		7	8													
							(RCTBA) NO 1,2,3,4, 5,6,7,8 (TRCA)	L(RCTB)	U(RCTB)	B/G			0		30.5	29	WDG ALONE
													0		69.5	66.5	PAR COMB. (RCTB) & (RCTBA)
RCTBA	1/2AK6		7	2													
							(RCTB)NO 1,5(RCTBA) 5(TRCA)	1L(RCTBA)	2L(RCTBA)	B/G			0		29	27.5	WDG ALONE
													0		68.5	65	PAR COMB. (RCTB) & (RCTBA) MOUNTED WITH (SEBA)
RGA	AF132		5	61													
							10(TP2)- 10(TP7) 10(TRPO) 10(TRP1) (RGAA)NO 1,2,3,4,7, 9,10,11 (RGA)	L(RGA)	U(RGA)	B/G			0		34.5	32.5	WDG ALONE
													0		76	72.5	PAR COMB. (RGA) & (RGAA)

TEST NOTES:

1. MAKE REGISTER 0 BUSY.
2. MAKE REGISTER 1 BUSY.

DRAWING ISSUE

	PC
1	
2B	RH RD
9B	VZ MS PD
14B	VS JBS TEB
30D	PJS GFH

(22 PAGES) PAGE 11

LINE, LINK AND MARKER CIRCUIT	SD-65741-01-F6
BELL TELEPHONE LABORATORIES, INC	30

CIRCUIT REQUIREMENTS

APPARATUS DESIG	APPARATUS CODE	APPARATUS OPTION	APPARATUS FIG.	MECH REQT BSP FIG.	MECH REQT CONT PRESS.	MECH REQT ARM. TRVL.	CIRCUIT PREPARATION BLOCK OR INSULATE	TEST CLIP DATA CONN BAT.	TEST CLIP DATA CONN GRD	TEST SET PREP	SEE TEST NOTE	DIRECT CURRENT FLOW REQT TEST WDG	TEST FOR	AFTER SOAK MA.	TEST MA.	READJ MA.	REMARKS
RGAA	AF132		5	61													
							1G(TP2)- 10(TP7) 10(TRPO) 10(TRP1) (RGA)NO	L(RGAA)	U(RGAA)	B/G			0		34.5	32.5	WDG ALONE
													0		76	72.5	PAR COMB. (RGAA) & (RGA)
RGB	AF132		5	61													
							9(TP2)- 9(TP7) 10(TRPO) 10(TRP1) (RGBA)NO 1,2,3,4,7, 9,10,11 (RGB)	L(RGB)	U(RGB)	B/G			0		34.5	32.5	WDG ALONE
													0		76	72.5	PAR COMB. (RGB) & (RGBA)
RGBA	AF132		5	61													
							9(TP2)- 9(TP7) 9(TRPO) 9(TRP1) (RGB)NO	L(RGBA)	U(RGBA)	B/G			0		34.5	32.5	WDG ALONE
													0		76	72.5	PAR COMB. (RGBA) & (RGB)
RHKA	AF114		5	54			(HMTA)NO 10(RHKA)		U(RHKA)	GRD			0		24.5	23	STRAP CONTACT 2(RHKA)
RHKB	AF114		5	54			(HMTB)NO 1Q(RHKB)		U(RHKB)	GRD			0		24.5	23	STRAP CONTACT 2(RHKB)
RLO	1/2AK5	19	19	4			1M(RLO)		2L(RLO)	GRD			0		15.8	15.0	MTD. WITH RLI
RLI	1/2AK5	19	19	4			12M(RLI)		2U(RLI)	GRD			0		15.8	15.0	MTD. WITH RLO
RLA	AF88		8	42													
							(DCKA)O (RLAA)NO (RLAB)NO 2,4(RLA)	L(RLA)	U(RLA)	B/G			0		33.5	31.5	WDG ALONE
													0		85	81	PAR COMB. (RLA), (RLAA), (RLAB) STRAP CONTACTS 5,7 AND 11(RLA)
RLAA	AJ5		8	220													
							(DCKA)O (RLA)NO (RLAB)NO	L(RLAA)	U(RLAA)	B/G			0		13.5	12.6	WDG ALONE
													0		12.9	12.3	PAR COMB.(RLAA),(RLA), (RLAB) STRAP CONTACTS 1,3,9 AND 11(RLAA)
RLAB	AF88		8	42													
							(DCKA)O (RLA)NO (RLAA)NO 2,4 (RLAB)	L(RLAB)	U(RLAB)	B/G			0		33.5	31.5	WDG ALONE
													0		85	81	PAR COMB. (RLAB),(RLA) (RLAA) STRAP CONTACTS 1,7,9,AND 11(RLBA)
RLAL	AF85		11	401			3(RLAL)		U(RLAL)	GRD			0		36.	34.	
									U(RLAL)	GRD			NO		22	23.5	
									U(RLAL)	GRD			R		9.9	10.5	
RLB	AF88		8	42													
							(DCKB)O (RLBA)NO (RLBB)NO 2,4(RLB)	L(RLB)	U(RLA)	B/G			0		33.5	31.5	WDG ALONE
													0		85	81	PAR COMB. (RLB),(RLBA), (RLBB) STRAP CONTACTS 3,9 AND 11(RLB)
RLBA	AJ5		8	220													
							(RLB)NO (RLBB)NO (DCKB)O	L(RLBA)	U(RLBA)	B/G			0		13.6	12.6	WDG ALONE
													0		129	123	PAR COMB. (RLBA),(RLB), (RLBB) STRAP CONTACTS 1,3,9 AND 11(RLBA)

DRAWING ISSUE

	PC
1	WS
2B	RH RD
9B	VZ MS PD
14B	VS JBS TEB
30D	PJS GFH

(22 PAGES) PAGE 12

LINE, LINK AND MARKER CIRCUIT	SD-65741-01-F6
BELL TELEPHONE LABORATORIES, INC	30

CIRCUIT REQUIREMENTS

APPARATUS DESIG	APPARATUS CODE	APPARATUS OPTION	APPARATUS FIG.	MECH REQT BSP FIG.	MECH REQT CONT PRESS.	MECH REQT ARM. TRVL	CIRCUIT PREPARATION BLOCK OR INSULATE	CIRCUIT PREPARATION TEST CLIP DATA CONN BAT.	CIRCUIT PREPARATION TEST CLIP DATA CONN GRD	TEST SET PREP	SEE TEST NOTE	DIRECT CURRENT FLOW REQT TEST WDG	DIRECT CURRENT FLOW REQT TEST FOR	DIRECT CURRENT FLOW REQT AFTER SOAK MA.	DIRECT CURRENT FLOW REQT TEST MA.	DIRECT CURRENT FLOW REQT READJ MA.	REMARKS
RLBB	AF86		8	42									0		33.5	31.5	WDG ALONE
							(DCKB)O (RLB)NO (RLBA)NO 2,4 (RLBB)	L(RLBB)	U(RLB6)	B/G			0		85	81	PAR COMB. (RLBB). (RLB). (RLBA) STRAP CONTACTS 1,7,9, 11(RLBB)
RLSA	AJ12	ZH	10	220									0		42.5	40.5	WDG ALONE
							(RCKA)O (RLSAA) NO	L(RLSA)	U(RLSA)	B/G			0		95	90	PAR COMB. (RLSA) & (RLSAA) STRAP CONTACTS 2,5,8,9, AND 10(RLSA)
RLSA	AJ39	ZI	10	220									0		18.5	17.5	WDG ALONE
							(RCKA)O (RLSAA) NO	L(RLSA)	U(RLSA)	B/G			0		49	46.5	PAR COMB. (RLSA) & (RLSAA) STRAP CONTACTS 2,5,8,9, AND 10(RLSA)
RLSAA	AJ12		10	220									0		42.5	40.5	WDG ALONE
							(RCKA)O (RLSA)NO 3,6 (RLSAA)	L(RLSAA)	U(RLSAA)	B/G	3		0		95	90	PAR COMB. (RLSAA) & (RLSA)
								L(RLSAA)	U(RLSAA)	B/G	4		0		80	75	STRAP CONTACTS 4,8,9,10, AND 11(RLSAA)
RLSB	AJ12	ZH	10	220									0		42.5	40.5	WDG ALONE
							(RCKB)O (RLSBA) NO	L(RLSB)	U(RLSB)	B/G			0		95	90	PAR COMB. (RLSB) & (RLSBA) STRAP CONTACTS 2,5,8,9, AND 12(RLSB)
RLSB	AJ39	ZI	10	220									0		18.5	17.5	WDG ALONE
							(RCKB)O (RLSBA) NO	L(RLSB)	U(RLSB)	B/G			C		49	46.5	PAR COMB. (RLSB) & (RLSBA) STRAP CONTACTS 2,5,8,9, AND 12(RLSB)
RLSBA	AJ12		10	220									0		42.5	40.5	WDG ALONE
							(RCKB)O (RLSB)NO 3,6 (RLSBA)	L(RLSBA)	U(RLSBA)	B/G	3		0		95	90	PAR COMB. (RLSBA) & (RLSB)
								L(RLSBA)	U(RLSBA)	B/G	4		0		90	75	STRAP CONTACTS 4,8,9,10, AND 11(RLSBA)
RPO	AF77		4	8			(RPAO)NO 3,4,9,10,12 (RPO)	1L(RPO)	1U(RPO)	B/G	1	P	C		49	46.5	
								2L(RPO)	2U(RPO)	B/G	1	S	C		44	41.5	
RP1	AF77		4	8			(RPA1)NO 3,4,9,10, 12 (RP1)	1L(RP1)	1U(RP1)	B/G	2	P	0		49	46.5	
								2L(RP1)	2U(RP1)	B/G	2	S	0		44	41.5	
RPAO	AJ202		7	500			1,2,7,8, 9,10,11, 12 (RPAO)	L(RPAO)	U(RPAO)	B/G	1		0		42.5	40.5	
RPA1	AJ202		7	500			1,2,7,8, 9,10,11, 12 (RPA1)	L(RPA1)	U(RPA1)	B/G	2		0		42.5	40.5	
RUCA	AF132		7	61			9(SEB) 1,2,3,4, 5,7,9,10, 11,12 (RUCA)	L(RUCA)	U(RUCA)	B/G			0		34.5	32.5	
RUCB	AF132		7	61			7(SEB) 1,2,3,4, 5,7,9,10, 11,12 (RUCB)	L(RUCB)	U(RUCB)	B/G			C		34.5	32.5	
SD-S9	AJ55		7	62			(U-)NO 1,2,3,4, 6,8,10, 11,12(S-)	1L(S-)		BAT		P	0		6.6	6.2	STRAP CONTACTS 4,6,8 AND 10(S-)
								2L(S-)		BAT		S	0		25.5		
SAA	AF64		10	219			(MTA)NO 2,4,8, 10(SAA)	L(SAA)	U(SAA)	B/G			C		11.2	10.6	
SAB	AF64		10	219			(MTB)NO 2,4,8, 10(SAB)	L(SAB)	U(SAB)	B/G			C		11.2	10.6	

TEST NOTES:

1. MAKE REGISTER C BUSY.
2. MAKE REGISTER I BUSY.
3. TEST VALUES FOR USE WHEN ZH OPTION IS FURNISHED.
4. TEST VALUES FOR USE WHEN ZI OPTION IS FURNISHED.

DRAWING ISSUE: 1 P.C. MR; 2B P.C. MR; 5D A.D. 2-19-62; 9B V.T. 2-15-62 PD; 11B D.L. 6-14-62 P.O.B.

(22 PAGES) PAGE 13

NO. 756A LINE, LINK AND MARKER CIRCUIT — SD-65741-01-F7

BELL TELEPHONE LABORATORIES, INC

PRINTED IN U.S.A.

SD-65741-01-F7

CIRCUIT REQUIREMENTS

APPARATUS DESIG	APPARATUS CODE	APPARATUS OPTION	APPARATUS FIG.	MECH REQT BSP FIG.	MECH REQT CONT PRESS.	MECH REQT ARM. TRVL	CIRCUIT PREPARATION BLOCK OR INSULATE	CIRCUIT PREPARATION TEST CLIP DATA CONN BAT.	CIRCUIT PREPARATION TEST CLIP DATA CONN GRD	TEST SET PREP	SEE TEST NOTE	DIRECT CURRENT FLOW REQT TEST WDG	DIRECT CURRENT FLOW REQT TEST FOR	DIRECT CURRENT FLOW REQT AFTER SOAK MA.	DIRECT CURRENT FLOW REQT TEST MA.	DIRECT CURRENT FLOW REQT READJ MA.	REMARKS
SEA	AF64		7	219									0		11.	10.6	WDG ALONE
							10(RLSBA) (SEAA)NO 1,2,3,4,5, 8,10 (SEA)	L(SEA)	U(SEA)	B/G			0		64.5	61.3	PAR COMB. (SFA) & (SEAA) STRAP CONTACT 9(SEA)
SEAA	1/2 AK5		7	2									0		29	27.5	WDG ALONE
							10(RLSBA) (SEA)NO 10(SEAA)	1U(SEAA)	2U(SEAA)	B/G			0		50.5	48.5	PAR COMB. (SEAA) & (SEA) STRAP CONTACTS 12 AND 11(SEA) MOUNTED WITH (RCTAA)
SEB	AF64		7	219									0		11.	10.6	WDG ALONE
							10(RLSAA) (SEBA)NO 1,2,3,4,5, 8,10 (SEB)	L(SEB)	U(SEB)	B/G			0		64.5	61.3	PAR COMB. (SEB) & (SEBA) STRAP CONTACT 9(SEB)
SEBA	1/2 AK6		7	2									0		29	27.5	WDG ALONE
							10(PLSAA) (SEB)NO 10(SEBA)	1U(SEBA)	2U(SEBA)	B/G			0		50.5	48.5	PAR COMB. (SEBA) & (SEB) STRAP CONTACTS 10 AND 8(SEBA) MOUNTED WITH (RCTSA)
SL20-29	AF10		17	214					U REL TST	GRD			0		8.1	7.2	
SMC0, .1	AF24		16	8			11,12(SMC-)		U(SMC-)	GRD			0		30.5	29	
			15														
2,3			.1														
4,5			15														
6,7			16														
8			16														
SMRA	AF132		8	61									0		34.5	32.5	WDG ALONE
							(SMTA)NO (CDMA)NO (BYA)NO 1,2,3,4, 5,7,9, 10,11,12 (SMRA) (SMRAA)NO	L(SMRA)	U(SMRA)	B/G			0		76.5	72.5	PAR COMB. (SMRA) & (SMRAA)
SMRAA	AF132		8	61									0		34.5	32.5	WDG ALONE
							(SMTA)NO (CDMA)NO (BYA)NO 1,2,3,4, 5,7,8,9, 10,11,12 (SMRAA) (SMRA)NO	L(SMRAA)	U(SMRAA)	B/G			0		76.5	72.5	PAR COMB. (RMEAA) & (SMRA)
SMRB	AF132		8	61									0		34.5	32.5	WDG ALONE
							(SMTB)NO (CDMB)NO (BYB)NO 1,2,3,4, 5,7,9, 10,11,12 (SMRB) (SMRBA)NO	L(SMRB)	U(SMRB)	B/G			0		76.5	72.5	PAR COMB. (SMRB) & (SMRBA)
SMRBA	AF132		8	61									0		34.5	32.5	WDG ALONE
							(SMTB)NO (CDMB)NO (BYB)NO 1,2,3,4, 5,7,8,9, 10,11,12 (SMRBA) (SMRB)NO	L(SMRBA)	U(SMRBA)	B/G			0		76.5	72.5	PAR COMB. (SMRBA) & (SMRB)

DRAWING ISSUE: 1 P.C. MR; 2B P.C. MR; 5D A.D. 2-19-62; 9B V.T. 2-15-62 PD; 11B D.L. 6-14-62 P.O.B.

(22 PAGES) PAGE 14

NO. 756A LINE, LINK AND MARKER CIRCUIT (2) — SD-65741-01-F7

BELL TELEPHONE LABORATORIES, INC — DWG SIZE 6S

PRINTED IN U.S.A.

CIRCUIT REQUIREMENTS

APPARATUS DESIG	APPARATUS CODE	APPARATUS OPTION	APPARATUS FIG.	MECH REQT BSP FIG.	MECH REQT CONT PRESS.	MECH REQT ARM. TRVL.	CIRCUIT PREPARATION BLOCK OR INSULATE	CIRCUIT PREPARATION TEST CLIP DATA CONN BAT.	CIRCUIT PREPARATION TEST CLIP DATA CONN GRD	TEST SET PREP	SEE TEST NOTE	DIRECT CURRENT FLOW REQT TEST WDG	DIRECT CURRENT FLOW REQT TEST FOR	DIRECT CURRENT FLOW REQT AFTER SOAK MA.	DIRECT CURRENT FLOW REQT TEST MA.	DIRECT CURRENT FLOW REQT READJ MA.	REMARKS
SMTA	AJ53		9,22	298			9(RLSB)(HMTAA)NO (SMRA)NO (SMRAA) NO (TRKA)NO (TRKAA) NO 4,5,7 (SMTA)	L(SMTA)	U(SMTA)	B/G	1		0		39	37	STRAP CONTACT 10(SMTA)
								L(SMTA)	U(SMTA)	B/G			NO		21	22.5	
SMTB	AJ53		9,22	298			9(RLSA)(HMTBA)NO (SMRB)NO (SMRBA) NO (TRKB)NO (TRKBA) NO 4,5,7 (SMTB)	L(SMTB)	U(SMTB)	B/G	1		0		39	37	STRAP CONTACT 10(SMTB)
								L(SMTB)	U(SMTB)	B/G			NO		21	22.5	
SOA	AF82		8	235			(BSYA)NO 1,2,3,4, 5,6,7,8,9, 10,11, (SOA)	L(SOA)	U(SOA)	B/G			0		37	35	STRAP CONTACTS 4 AND 8(SOA)
SOB	AF82		8	235			(BSYB)NO 1,2,3,4, 5,6,7,8,9, 10,11, (SOB)	L(SOB)	U(SOB)	B/G			0		37	35	STRAP CONTACTS 4 AND 8 (SOB)
STA	AJ15		10	249			(MTA)NO 9(SAA)	L(STA)	U(STA)	B/G			0		42.5	40.5	STRAP CONTACTS 2,3,9 AND 10 (STA)
STAR	1/2AK4		10	202			(MTA)NO 9(SAA)	1U(STAR)	2U(STAR)	B/G			0		11.9	11.3	STRAP CONTACTS 8,9,10, AND 11(STAR).
STB	AJ15		10	249			(MTB)NO 9(SAB)	L(STB)	U(STB)	B/G			0		42.5	40.5	STRAP CONTACTS 2,3,9 AND 10 (STB)
STBR	1/2AK4		10				(MTB)NO 9(SAB)	1L(STBR)	2L(STBR)	B/G			0		11.9	11.3	STRAP CONTACTS 2,3,4, AND 5(STBR).
T2-5 T6,7	AJ12	V	4	220			(TA-)0 2,3,4,5, 7,9(T-)	L(T-)	U(T-)	B/G			0		42.5	40.5	STRAP CONTACTS 3,5,7 AND 9(T-)
TA	1/2AK4	VR		202				1U(TA)	2U(TA)	B/G	2		0		11.9	11.3	MOUNTED WITH (TB)
TA2-5 TA6,7	AJ31	V	4	36			(T-)NO 10(TA-)	L(TA-)	U(TA-)	B/G			0		14.4	13.7	
TAA	AJ54	VQ	10	306			(MTA)NO (STA)NO 10J2(TAA)	L(TAA)	U(TAA)	B/G			0		38	36	STRAP CONTACTS 8,9 (TAA)
								L(TAA)	U(TAA)	B/G			NO		21	22.5	
TAAL	AF9		11	213			12(TAAL)		U(TAAL)	GRD			0		8.7	8.2	
TAB	AJ54	VQ	10	306			(MTB)NO (STB)NO 10J2(TAB)	L(TAB)	U(TAB)	B/G			0		38	36	STRAP CONTACTS 4,9(TAB)
								L(TAB)	U(TAB)	B/G			NO		21	22.5	

DRAWING ISSUE: 1 A.C. M.A. | 2B TC-F8.1 W.S. M.L. | 14B V.S. VAS T.E.B. | 33D FED RHP ROZ | 36B PJS LDJ | 41B

1. IF OPTION WX IS PROVIDED (ISSUE 36B), ALSO INSULATE 9 OF (SMT-).
2. REMOVE (T) RELAY DELAY TIMER CKT.

CIRCUIT REQUIREMENTS

APPARATUS DESIG	APPARATUS CODE	APPARATUS OPTION	APPARATUS FIG.	MECH REQT BSP FIG.	MECH REQT CONT PRESS.	MECH REQT ARM. TRVL.	CIRCUIT PREPARATION BLOCK OR INSULATE	CIRCUIT PREPARATION TEST CLIP DATA CONN BAT.	CIRCUIT PREPARATION TEST CLIP DATA CONN GRD	TEST SET PREP	SEE TEST NOTE	DIRECT CURRENT FLOW REQT TEST WDG	DIRECT CURRENT FLOW REQT TEST FOR	DIRECT CURRENT FLOW REQT AFTER SOAK MA.	DIRECT CURRENT FLOW REQT TEST MA.	DIRECT CURRENT FLOW REQT READJ MA.	REMARKS
TACA	AF24		7	8			11(RLSBA)(TACAA) NO 1,2,5,6 (TACA)	L(TACA)	U(TACA)	B/G			0		30.5	29	WDG ALONE
													0		68	64.5	PAR COMB. (TACA) & (TACAA)
TACAA	AF55		7	26			11(RLSBA)(TACA)NO 1,2,4,6 (TACAA)	L(TACAA)	U(TACAA)	B/G			0		37	35	WDG ALONE
													0		82	78	PAR COMB. (TACAA) & (TACA)
TACB	AF24		7	8			11(RLSAA)(TACBA) NO 1,2,5,6 (TACB)	L(TACB)	U(TACB)	B/G			0		30.5	29	WDG ALONE
													0		68	64.5	PAR COMB. (TACB) & (TACBA)
TACBA	AF55		7	26			11(RLSAA)(TACB)NO 1,2,4,6 (TACBA)	L(TACBA)	U(TACBA)	B/G			0		37	35	WDG ALONE
													0		82	78	PAR COMB. (TACBA) & (TACB)
TAL	AF85		11	401			3(TAL)		U(TAL)	GRD			0		36	34	
									U(TAL)	GRD			NO		2.2	23.5	
									U(TAL)	GRD			R		9.9	10.5	
TB	1/2AK4	VR		202				1L(TB)	2L(TB)	B/G	2		0		11.9	11.3	MOUNTED WITH (TA)
TCK1	1/2AK3		4	3			1(RLAA)	1U(TCK1)		BAT.			0		33	31	MOUNTED WITH (TCK2)
TCK2	1/2AK3		4	3			9(RLAA)		2L(TCK2)	GRD			0		27.5	26	MOUNTED WITH (TCK1)
TCK3	1/2AK3		4	3			11(RLAA)		2L(TCK3)	GRD			0		27.5	26	MOUNTED WITH (TCK4)
TCK4	1/2AK3		4	3			3(RLAA)	1U(TCK4)		BAT.			0		33	31	MOUNTED WITH (TCK3)
TCS2-5 TCS6,7	AF132	V	1,2	61			(T-)NO (TW-)NO (TU-)NO (THC-)NO 1-5,7,9-12 (TCS-)	L(TCS-)	U(TCS-)	B/G			0		160	152	WDG ALONE. PAR COMB. (TCS-), (TW-), (TU-), (THC-)
TEA0	AF55		4	26			8(RLSA) (TEA1)NO (TEA2)NO (TEA3)NO	L(TEA0)	U(TEA0)	B/G	1		0		75	71	
TEA1	AF129		4	28			8(RLSA) (TEA0)NO (TEA2)NO (TEA3)NO	L(TEA1)	U(TEA1)	B/G	1		0		79	75	STRAP CONTACTS 1,3,5,7,9 AND 11(TEA1)
													0		10	9.5	WDG ALONE
TEA2	AF129		4	28			8(RLSA) (TEA0)NO (TEA1)NO 2,4 (TEA2) (TEA3)NO	L(TEA2)	U(TEA2)	B/G	1		0		79	75	STRAP CONTACTS 5,9(TEA2)
													0		12.6	12	WDG ALONE
TEA3	AF119		4	266			8(RLSA) (TEA0)NO (TEA1)NO (TEA2)NO 2,4(TEA3)	L(TEA3)	U(TEA3)	B/G	1		0		99	94	STRAP CONTACTS 7,9 (TEA3)

DRAWING ISSUE: 1 A.C. M.A. W.S | 2B TC-F8.1 M.L. | 14B V.S. VAS T.E.B. WORK DRAWING REPRODUCED WITHOUT CHANGE 12-27-67 RH | 33D FED PJS RHP ROZ | 36B PJS LDJ | 41B

TEST NOTES:
1. PARALLEL COMBINATION (TEA0), (TEA1), (TEA2) AND (TEA3).
2. REMOVE (T) RELAY DELAY TIMER CKT.

SD-65741-01-F8

CIRCUIT REQUIREMENTS

DRAWING ISSUE: 1 P.C. | 2B ARR RD | 11B P.L. ARR RD P.O.B. | 20AC TWG | 41B

APPARATUS DESIG	APPARATUS CODE	APPARATUS OPTION	APPARATUS FIG.	MECH REQT BSP FIG.	MECH REQT CONT PRESS.	MECH REQT ARM. TRVL.	CIRCUIT PREPARATION BLOCK OR INSULATE	TEST CLIP DATA CONN BAT.	TEST CLIP DATA CONN GRD	TEST SET PREP	SEE TEST NOTE	DIRECT CURRENT FLOW REQT TEST WDG	TEST FOR	AFTER SOAK MA.	TEST MA.	READJ MA.	REMARKS
TEBO	AF55		4	26									0		37	35	WDG ALONE
							8(RLSB) (TEB1)NO (TEB2)NO (TEB3)NO	L(TEBO)	U(TEBO)	B/G	3		0		75	71	
TEB1	AF129		4	28									0		10	9.5	WDG ALONE
							8(RLSB) (TEBO)NO (TEB2)NO (TEB3)NO	L(TEB1)	U(TEB1)	B/G	3		0		79	75	STRAP CONTACTS 1,3,5,7, 9 & 11(TEB1)
TEB2	AF129		4	28									0		10	9.5	WDG ALONE
							8(RLSB) (TEBO)NO (TEB1)NO 2,4 (TEB2) (TEB3)NO	L(TEB2)	U(TEB2)	B/G	3		0		79	75	STRAP CONTACTS 5 & 9(TEB2)
TEB3	AF119		4	226									0		12.6	12	WDG ALONE
							8(RLSB) (TEBO)NO (TEB1)NO (TEB2)NO 2,4(TEB3)	L(TEB3)	U(TEB3)	B/G	3		0		99	94	STRAP CONTACTS 7 & 9(TEB3)
TMC2-5 TMC6,7	AF132	V	1,2	61									0		34.5	32.5	WDG ALONE
							(T-)NO (TM-)NO (TU-)NO (TCS-)NO 1-5,7,9-12 (THC-)	L(THC-)	U(THC-)	B/G	1		0		160	152	PAR COMB. (THC-), (TM-), (TCS-), (TU-)
TKO	AF132		6	61									0		34.5	32.5	WDG ALONE
							(TKAO)NO (TKBO)NO 9(RCEO) 9(RCEI) 11(TRKA) 1,2,3,7, 9,10(TKO)	L(TKO)	U(TKO)	B/G			0		119	113	PAR COMB.(TKO),(TKAO), (TKBO), STRAP CONTACT 8(TKO)
TK8, TK9	AF132		1 6	61									0		34.5	32.5	WDG ALONE
							(TKA-)NO (TKB-)NO 1-5,7,9-12 (TK-)	L(TK-)	J(TK-)	B/G	2		0		140	130	PAR COMB.(TK-),(TKA-),(TKB-) REL & (TK--) RES STRAP CONTACT. 8(TK-)
TKAO	AF132		6	61									0		34.5	32.5	WDG ALONE
							(TKO)NO (TKBO)NO 9(RCEO) 9(RCEI) 11(TRKA) 1,2,3,7,9, 10(TKAO)	L(TKAO)	U(TKAO)	B/G			0		119	113	PAR COMB(TKAO),(TKO),(TKBO) STRAP CONTACT 8(TKAO)
TKA8, TKA9	AF132		1 6	61									0		34.5	32.5	WDG ALONE
							(TK-)NO (TKB-)NO 1-5,7,9-12 (TKA-)	L(TKA-)	U(TKA-)	B/G	2		0		140	130	PAR COMB. (TKA-),(TK-),(TKB-) REL & (TK--) RES STRAP CONTACT 8(TK-)
TKBO	AF132		6	61									0		34.5	32.5	WDG ALONE
							(TKO)NO (TKAO)NO 9(RCEO) 9(RCEI) 11(TRKA) 11,12(TKBO)	L(TKBO)	U(TKBO)	B/G			0		119	113	PAR COMB. (TKBO),(TKO), (TKAO)
TKB8, TKB9	AF132		1 6	61									0		34.5	32.5	WDG ALONE
							(TK-)NO (TKA-)NO 11,12(TKB-)	L(TKB)	U(TKB)	B/G	2		0		140	130	PAR COMB. (TKB-),(TK-), (TKA-) REL & (TK--) RES
TM2-5 TM6,7	AF132	V	1,2	61									0		34.5	32.5	WDG ALONE
							(T-) NO (THC-) NO (TCS-) NO (TU-)NO 1-5,7,9-12 (TM-)	L(TM-)	U(TM-)	B/G	4		0		160	152	PAR COMB. (TM-), (THC-) (TCS-),(TU-)

TEST NOTES:

1. INSULATE CONTACTS ON (RCDO), (RCDI), (RCEO) AND (RCEI) AS FOLLOWS:
   - THC2-12(RCD-)
   - THC3-11(RCD-)
   - THC4-10(RCD-)
   - THC5- 9(RCD-)
   - THC6- 7(RCD-)
   - THC7-12(RCE-)
2. INSULATE CONTACTS ON (RCEO) AND (RCEI) AS FOLLOWS:
   - TK8-11
   - TK9-10
3. PARALLEL COMBINATION (TEBO), (TEBI), (TEB2) AND (TEB3).
4. INSULATE CONTACTS ON (RCDO), (RCDI), (RCEO) AND (RCEI) AS FOLLOWS:
   - TM2 12(RCD-)
   - TM3 11(RCD-)
   - TM4 10(RCD-)
   - TM5 9(RCD-)
   - TM6 7(RCD-)
   - TM7 12(RCE-)

LINE, LINK AND MARKER CIRCUIT | SD-65741-01-F9

BELL TELEPHONE LABORATORIES, INC

PRINTED IN U.S.A.

SD-65741-01-F9

CIRCUIT REQUIREMENTS

DRAWING ISSUE: 1 P.C. W.S | 2B ARR RD | 11B P.L. ARR RD P.O.B. | 20AC TWG P.O. NO | 41B

APPARATUS DESIG	APPARATUS CODE	APPARATUS OPTION	APPARATUS FIG.	MECH REQT BSP FIG.	MECH REQT CONT PRESS.	MECH REQT ARM. TRVL.	CIRCUIT PREPARATION BLOCK OR INSULATE	TEST CLIP DATA CONN BAT.	TEST CLIP DATA CONN GRD	TEST SET PREP	SEE TEST NOTE	DIRECT CURRENT FLOW REQT TEST WDG	TEST FOR	AFTER SOAK MA.	TEST MA.	READJ MA.	REMARKS
TMA	AG8	VQ	10	448			(TOA)NO	L(TMA)	U(TMA)	B/G			0	20	7.7	7.3	
							(MTA)NO	L(TMA)	U(TMA)	B/G			H	20	1.1	1	
								L(TMA)	U(TMA)	B/G			R	20	.5	.7	
TMB	AG8	VQ	10	448			(TOB)NO	L(TMB)	U(TMB)	B/G			0	20	7.7	7.1	
							(MTB)NO	L(TMB)	U(TMB)	B/G			H	20	1.1	1	
								L(TMB)	U(TMB)	B/G			R	20	.5	.7	
TOA	AG2	VQ	10	368			(TAA)NO	L(TOA)	U(TOA)	B/G			0	36	12.4	11.8	
							(MTA)NO	L(TOA)	U(TOA)	B/G			H	36	2.1	2.0	
							8(TOA)	L(TOA)	U(TOA)	B/G			R	36	1.1	1.4	
TOAL	AF85		11	401					U(TOAL)	GRD			0		36	34	
							3(TOAL)		U(TOAL)	GRD			NO		22	23.5	
									U(TOAL)	GRD			R		9.9	10.5	
TOALA	AF85		11	401					U(TOALA)	GRD			0		36	34	
							3(TOALA)		U(TOALA)	GRD			NO		22	23.5	
									U(TOALA)	GRD			R		9.9	10.5	
TOB	AG2	VQ	10	368			(TAB)NO	U(TOB)	L(TOB)	B/G			0	36	12.4	11.8	
							(MTB)NO	U(TOB)	L(TOB)	B/G			H	36	2.1	2.0	
							10(TOB)	U(TOB)	L(TOB)	B/G			R	36	1.1	1.4	
TOKA	AF64		10	219			(TAAL)O 4,5 (TOKA)	L(TOKA)	U(TOKA)	B/G			0		11.2	10.6	STRAP CONTACTS 3 AND 5 (TOKA)
TOKB	AF64		10	219			(TAAL)O 4,5 (TOKB)	L(TOKB)	U(TOKB)	B/G			0		11.2	10.6	STRAP CONTACTS 3 AND 5(TOKB)
TOLA	AF9		10	213			(TOKA)NO (TOKB)NO 10(TOLA)	L(TOLA)	U(TOLA)	B/G			0		8.7	8.2	
TOLB	AF9		10	213			(TOKA)NO (TOKB)NO 10(TOLB)	L(TOLB)	U(TOLB)	B/G			0		8.7	8.2	
TP2-5 TP6,7	AF77	V	4	8			(T-)NO 1,2,3 (TP-)	1L(TP-) 2L(TP-)	1U(TP-) 2U(TP-)	B/G B/G		P S	0 0		49 44	46.5 41.5	
TRO, TR1	AJ12		4	220			(TKA-)O 2,3,4,5 7,9(TR-)	L(TR-)	U(TR-)	B/G			0		42.5	40.5	STRAP CONTACTS 3,5,7 AND 9(TR-)
TRA	AG21		10	282B			(MTA)NO	1L(TRA)	1U(TRA)	B/G	2,3	P	0		48.5	46	
							(RCKA)O	1L(TRA)	1U(TRA)	B/G		P	H		6	5.7	
								1L(TRA)	1U(TRA)	B/G		P	R		3.9	4.6	
TRAO TRA1	AJ31		4	36			(TR-)NO 10(TRA-)	L(TRA-)	U(TRA-)	B/G			0		14.4	13.7	
TRAL	AF28		11	400B			4(TRAL)		U(TRAL)	GRD			0		27.5	26	
									U(TRAL)	GRD			R		10.3	10.9	
TRB	AG21		10	282B			(MTB)NO	1L(TRB)	1U(TRB)	B/G	2,3	P	0		48.5	46	
							(RCKB) O	1L(TRB)	1U(TRB)	B/G		P	H		6	5.7	
								1L(TRB)	1U(TRB)	B/G		P	R		3.9	4.6	
TRCO, TRC1	AF132		6	61			(TR-)NO (TRM-)NO (TRU-)NO	L(TRC-)	L(TRC.)	B/G	1		0		34.5 119	32.5 113	WDG ALONE PAR COMB.(TRC-),(TRM-) (TRU-)

TEST NOTES:

1. INSULATE CONTACTS 1,2,3,4 AND 5 ON (TRCO). INSULATE CONTACTS 7,9,10,11 AND 12 ON (TRC1).
2. PRIMARY TEST, REQUIREMENTS APPLY TO PRIMARY WINDING WITH SECONDARY WINDING SHORT-CIRCUITED.
3. ARMATURE BACK TENSION MAX 60 GRAMS READJUST, 65 GRAMS TEST.

LINE, LINK AND MARKER CIRCUIT (2) | SD-65741-01-F9

BELL TELEPHONE LABORATORIES, INC | SIZE 6S

PRINTED IN U.S.A.

CIRCUIT REQUIREMENTS

DRAWING ISSUE: 1 P.C. W.E. | 2 B 7&G F63 | 33D FED PJS RHP

APPARATUS DESIG	APPARATUS CODE	APPARATUS OPTION	APPARATUS FIG.	MECH REQT BSP FIG.	MECH REQT CONT PRESS.	MECH REQT ARM. TRVL.	CIRCUIT PREPARATION BLOCK OR INSULATE	TEST CLIP DATA CONN BAT.	TEST CLIP DATA CONN GRD	TEST SET PREP	SEE TEST NOTE	DIRECT CURRENT FLOW REQT TEST WDG	TEST FOR	AFTER SOAK MA.	TEST MA.	READJ MA.	REMARKS
TRCA	AJ15		7	249			(TRKA)NO (TRCAA) NO (HMTAA)NO 3,8(TRCA)	L(TRCA)	U(TRCA)	B/G			0		42.5	40.5	WDG ALONE
													0		58	55	PAR COMB. (TRCA) & (TRCAA) STRAP CONTACTS 2, AND 4(TRCA)
TRCAA	AF64		7	219									0		11	10.6	WDG ALONE
							(TRKA)NO (TRCA)NO 1,2,4,5,8,10, 11(TRCAA)	L(TRCAA)	U(TRCAA)	B/G			0		58	55	PAR COMB. (TRCAA) & (TRCA) STRAP CONTACTS 3,9,12(TRCAA)
TRCB	AJ15		7	249									0		42.5	40.5	WDG ALONE
							(TRKB)NO (TRCBA) NO (HMTBA)NO 3,8(TRCB)	L(TRCB)	L(TRCB)	B/G			0		58.	55	PAR COMB. (TRCB) & (TRCBA) STRAP CONTACTS 4,7 (TRCB)
TRCBA	AF64		7	219									0		11	10.6	WDG ALONE
							(TRKB)NO (TRCB)NO 1,2,4,5,8,10, 11(TRCBA)	L(TRCBA)	U(TRCBA)	B/G			0		58	55	PAR COMB. (TRCBA) & (TRCB) STRAP CONTACTS 3,9,12(TRCBA)
TRKA	AF88		7	42									0		33.5	31.5	WDG ALONE
							(JREA)NO 11(TRCA) 4(TRKA) (TRKAA) NO	L(TRKA)	U(TRKA)	B/G			0		74.5	71	PAR COMB. (TRKA) & (TRKAA) STRAP CONTACTS 3,5,7,9 AND 11 (TRKA)
TRKAA	AJ12		7	220									0		42.5	40.5	WDG ALONE
							(JREA)NO 11(TRCA) 4,12 (TRKAA) (TRKA)NO	L(TRKAA)	U(TRKAA)	B/G			0		95	90	PAR COMB. (TRKAA) & (TRKA) STRAP CONTACT 7 (TRKAA)
TRKB	AF88		7	42									0		33.5	31.5	WDG ALONE
							(JREB)NO 9(TRCB) 4(TRKB) (TRKBA) NO	L(TRKB)	U(TRKB)	B/G			0		74.5	71	PAR COMB. (TRKB) & (TRKBA) STRAP CONTACTS 3,5,9 AND 11 (TRKB)
TRKBA	AJ12		7	220									0		42.5	40.5	WDG ALONE
							(JREB)NO (TRKB)NO 9,TRCB) 4,12(TRKBA)	L(TRKBA)	U(TRKBA)	B/G			0		95	90	PAR COMB. (TRKBA) & (TRKB) STRAP CONTACTS 3. AND 9(TRKBA)
TRLA	AJ12		9,22	220			(ZLG)NO 1,2,3,4,5,6,7, 9,10,11,12 (TRLA)	L(TRLA)		BAT.			0		42.5	40.5	STRAP CONTACTS 1,2,3,4,6,7,9,10, 11,12 (TRLA)
TRLB	AJ12		9,22	220			(ZLG)NO 1,2,3,4,5,6,7 9,10,11,12 (TRLB)	L(TRLB)		BAT.			0		42.5	40.5	STRAP CONTACTS 1,2,3,4,6,7,9,10, 11,12(TRLB)
TRMO, TRMI	AF132		6	61			(TR-)NO (TRU-)NO (TRC-)NO	L(TRM-)	U(TRM-)	B/G	1		0		119	113	PAR COMB. (TRM-), (TRU-), TRC-)

1. INSULATE CONTACTS 1,2,3,4,5,7 AND 9 (TRMO). INSULATE CONTACTS 1,7,9,10,11 AND 12 (TRMI).

CIRCUIT REQUIREMENTS

APPARATUS DESIG	APPARATUS CODE	APPARATUS OPTION	APPARATUS FIG.	MECH REQT BSP FIG.	MECH REQT CONT PRESS.	MECH REQT ARM. TRVL.	CIRCUIT PREPARATION BLOCK OR INSULATE	TEST CLIP DATA CONN BAT.	TEST CLIP DATA CONN GRD	TEST SET PREP	SEE TEST NOTE	DIRECT CURRENT FLOW REQT TEST WDG	TEST FOR	AFTER SOAK MA.	TEST MA.	READJ MA.	REMARKS
TRPO, TRPI	AF77		4	8-			(TR-)NO 1,2,3 (TRP-)	1L(TRP-)	1U(TRP-)	B/G		P	0		49	46.5	
								2L(TRP-)	2U(TRP-)	B/G		S	0		44	41.5	
TRUO, TRUI	AF132		6	61										0	34.5	32.5	WDG ALONE
							(TR-)NO (TRM-)NO (TRC-)NO	L(TRU-)	U(TRU-)	B/G	4		0		119	113	PAR COMB. (TRU-), (TRM-), (TRC-)
TS	AF10		8	214			(TSDA)O 2(TS)		U(TS)	GRD			0		7.6	7.2	
TSDA	AJ12		8	220			(TEA1)NO		U(TSDA)	GRD			0		42.5	40.5	
TSDB	AJ12		8	220			(TEB1)NO		U(TSDB)	GRD			0		42.5	40.5	
TT	AJ19		8	41				1L(TT)	1U(TT)	B/G		P	0		29.5	28	
								2L(TT)	2U(TT)	B/G		S	0		27.5	26	
TU2-5 TU6,7	AF132	V	1,2	61										0	34.5	32.5	WDG ALONE
							(T-)NO (TM-)NO (TCS-)NO (THC-)NO 1,2,3,4,5,7,9, 10,11,12(TU-)	L(TU-)	U(TU-)	B/G			0	160	152	PAR COMB. (TU-), (TM-), (THC-), (TCS-)
UO-U9	1F2 AK2		7							GRD	1,2,3		0		15.5	14.5	
UAL	AF85		11	401			3(UAL)		U(UAL)	GRD			0		36	34	
									U(UAL)	GRD			NO		22	23.5	
									U(UAL)	GRD			R		9.9	10.5	
UAL1	AF85		11	401			3(UAL1)		U(UAL1)	GRD			0		36	34	
									U(UAL1)	GRD			NO		22	23.5	
									U(UAL1)	GRD			R		9.9	10.5	
UAL1A	AF85		11	401			3(UAL1A)		U(UAL1A)	GRD			0		36	34	
									U(UAL1A)	GRD			NO		22	23.5	
									U(UAL1A)	GRD			R		9.9	10.5	
UAL2	AF85		11	401			3(UAL2)		U(UAL2)	GRD			0		36	34	
									U(UAL2)	GRD			NO		22	23.5	
									U(UAL2)	GRD			R		9.9	10.5	
UEA	AF55		7	26			10(TACB) 10(TACA) 24(RPA1) 24(RPAO) 2,3,5,9, (UEA)	L(UEA)	U(UEA)	B/G			0		37	35	STRAP CONTACTS 6 AND 7 (UEA)
UEB	AF55		7	26			9(TACB) 9(TACA) 23(RPA1) 23(RPAO) 2,3,5,9, (UEB)	L(UEB)	U(UEB)	B/G			0		37	35	STRAP CONTACTS 7 AND 8 (UEB)
ULA	AF132		7	61			12(TACA) 12(TACB) 8(UEB) 1,2,3,4, 5,7,9, 10,11,12 (ULA)	L(ULA)	U(ULA)	B/G			0		34.5	32.5	

TEST NOTES:

1. INSULATE CONTACTS ON (LUCA), (LUCB), (RUCA) AND (RUCB) AS FOLLOWS:

REL	LUC(A,B)	RUC(A,B)	REL	LUC(A,B)	RUC(A,B)
U0	1	1	U5	7	7
U1	2	2	U6	9	9
U2	3	3	U7	10	10
U3	4	4	U8	11	11
U4	5	5	U9	12	12

2. INSULATE CONTACTS 1,2,3,4 AND 5 AND CONNECT GRD TO 1L ON U1, U3, U5, U7 AND U9. INSULATE CONTACTS 8,9,10,11 AND 12 AND CONNECT GRD TO 1U ON U0, U2, U4, U6 AND U8.
3. U0 MOUNTED WITH U1, U2 MOUNTED WITH U3, U4 MOUNTED WITH U5, U6 MOUNTED WITH U7, U8 MOUNTED WITH U9.
4. INSULATE CONTACTS 1,2,3,4,5,7 AND 9 (TRUO). INSULATE CONTACTS 1,7,9,10,11, AND 12 (TRUI).

CIRCUIT REQUIREMENTS

APPARATUS DESIG	APPARATUS CODE	APPARATUS OPTION	APPARATUS FIG.	MECH REQT BSP FIG.	MECH REQT CONT PRESS.	MECH REQT ARM. TRVL.	CIRCUIT PREPARATION BLOCK OR INSULATE	TEST CLIP DATA CONN BAT.	TEST CLIP DATA CONN GRD	TEST SET PREP	SEE TEST NOTE	DIRECT CURRENT FLOW REQT TEST WDG	TEST FOR	AFTER SOAK MA.	TEST MA.	READJ MA.	REMARKS
ULB	AF132		7	61			.11 (TACA) .11 (TACB) 1,2,3,4, 5,7,9, 10,11,12 (ULB) 6(UEB)	L(ULB)	U(ULB)	B/G			0		34.5	32.5	
WIL	AJ3		9,22	226									0		18	17	WDG ALONE
							1(WL) 6(WIL) 4(ZIL) (ZIL)NO		U(WIL)	GRD			0		39	37	PAR COMB. (WIL) & (ZIL)
WILA	1/2AK7		9,22	203			(WIL)NO (ZIL)NO 8(WILA)		2U(WILA)	GRD			0		27.	25.5	MOUNTED WITH (WLGA)
													NO		10.4	11	
WL	AJ3		9,22	226									0		18	17	WDG ALONE
							4(LTAA) 4(LTBA) 6(WL) 4(ZL) (ZL)NO 1(WL)		U(WL)	GRD			0		39	37	PAR COMB. (WL) & (ZL)
WLA	1/2AK7		9,22				(WL)NO (ZL)NO 5(WLA)		2L(WLA)	GRD			0		27.	25.5	MOUNTED WITH (WUA)
													NO		10.4	11	
WLG	AF98		9,22	245			2(WLGA) 4,10(WLG)		U(WLG)	GRD			0		14.8	14.1	
WLGA	1/2AK7		9,22	203			(WLG)NO (ZLG)NO		1L(WLGA)	GRD			0		27.	25.5	MOUNTED WITH (WILA)
													NO		10.4	11	
WU	AF98		9,22	245									0		14.8	14.1	WDG ALONE
							4,6(WU)		U(WU)	GRD			0		25	23.5	PAR COMB. (WU) & (ZU) "B" OPT
							1(ZU) (ZU)NO		U(WU)	GRD			0		34	32	PAR COMB. (WU) & (ZU) "A" OPT
WUA	1/2AK7		9,22	203			(WU)NO (ZU)NO 8(WUA)		2U(WUA)	GRD			0		27.	25.5	MOUNTED WITH (WLA)
													NO		10.4	11	
XC	AF96		22	46			4,6,8(XC) (COAA)NO (COBA)NO		1U(XC)	GRD		P	0		99.8	95	
									1U(XC)	GRD		P	NO		80.8	85	
XCAL	1/2AK24	WT	11	12			8,9,12(XCAL)		2U(XCAL)	GRD			0		7.8	7.4	MOUNTED WITH COAL
ZIL	AF110		9,22	272									0		16.5	15.5	WDG ALONE
							(WIL)NO 6(WIL) (WL)NO 4(ZIL)		U(ZIL)	GRD			0		36	34	PAR COMB. (ZIL) & (WIL)

DRAWING ISSUE

1	P.C.
2B	A.K.S. R.G. M.G. C.G.S.
8B	M.G. C.G.S.
9B	V.Z. M.S.
33D	FED RHF

(22 PAGES) PAGE 21

LINE, LINK AND MARKER CIRCUIT	SD-65741-01-F11
BELL TELEPHONE LABORATORIES, INC	PRINTED IN U.S.A.

SD-65741-01-F11

CIRCUIT REQUIREMENTS

APPARATUS DESIG	APPARATUS CODE	APPARATUS OPTION	APPARATUS FIG.	MECH REQT BSP FIG.	MECH REQT CONT PRESS.	MECH REQT ARM. TRVL.	CIRCUIT PREPARATION BLOCK OR INSULATE	TEST CLIP DATA CONN BAT.	TEST CLIP DATA CONN GRD	TEST SET PREP	SEE TEST NOTE	DIRECT CURRENT FLOW REQT TEST WDG	TEST FOR	AFTER SOAK MA.	TEST MA.	READJ MA.	REMARKS
ZL	AF98		9,22	245									0		14.8	14.1	WDG ALONE
							(WL)NO 6(WL) 4(ZL)		U(ZL)	GRD			0		33	31	PAR COMB. (ZL) & (WL)
ZLG	AF98		9,22	245									0		14.8	14.1	WDG ALONE
							2,6(ZLG) (WLG)NO (WLGA)NO	L(ZLG)		BAT			0		33	31	PAR COMB. (ZLG) & (WLG)
ZU	AJ5	B	9	220									0		13.3	12.6	WDG ALONE
							1,2,4,6,8,9, 10,11,12(ZU) (WU)NO 6(WU)		U(ZU)	GRD			0		42	40	PAR COMB. (ZU) & (WU). STRAP CONTACTS 2,4,6,8,9,10,11,&12(ZU)
ZU	AJ39	A	9,22	220			1,2,4,6,8,9, 10,11,12 (ZU) (WU)NO 6(WU)		U(ZU)	GRD			0		18.5	17.5	WDG ALONE
													0		41	39	PAR COMB. (ZU) & (WU). STRAP CONTACTS 2,4,6,8,9,10,11,&12(ZU)

DRAWING ISSUE

1	P.C. M.S.
2B	A.K.S. R.G. M.G. C.G.S.
8B	M.G. C.G.S.
9B	V.Z. M.S.
33D	FED RHF

(22 PAGES) PAGE 22

LINE, LINK AND MARKER CIRCUIT (2)	SD-65741-01-F11
BELL TELEPHONE LABORATORIES, INC	DWG SIZE 6S — PRINTED IN U.S.A.

33