SHEET INDEX

CONTENTS	SHEET NO.	ISSUE NO. 5	6	7	8	9	10	11	12	13	14	15	16	17	18	19	20	21	22	23	24	25	26	27	28	29	30	31	32	33	34	35	36	37	38	39	40	41	42	43	44	45	46	47	48	49	50	51	52	53	SHEET NO.
SHEET INDEX SUPPORTING INFORMATION	A1	5	**6**	7																																															A1
APPARATUS INDEX LEAD INDEX OPTION INDEX	A2	5	**6**	7																																															A2
SHEET INDEX (CONTINUATION)	A3	5	**6**	7																																														A3
	A4	5	**6**	7																																														A4
FS1 OFF NORMAL AND CALLING CONTROL	B1	5	**6**	7																																														B1
FS2 STEERING, CONNECT, AND BUSY BACK CONTROL	B2	5	**6**	6																																														B2
FS3 CALLING PORTS	B3A	5	**5**	5																																														B3A
	B3B	5	**6**	6																																														B3B
FS4 RINGING AND TRANSFER CONTROL	B4	5	**5**	5																																														B4
FS5 CONFERENCE AMPLIFIER	B5	5	**5**	5																																														B5
FS6 PRIVATE CONSULTATION CONTROL	B6	5	**5**	5																																														B6
APP FIG. 1	C1	5	**6**	7																																														C1
APP FIG. 2 & 3	C2	5	**6**	6																																														C2
CIRCUIT NOTES INFORMATION NOTES	D1	5	**5**	5																																														D1
INFORMATION NOTES (CONTINUATION)	D2	5	**5**	5																																														D2
	D3	5	**5**	5																																														D3
SC1 ORIGINATING A CONFERENCE SC2 (MD) ADDING A STATION (WITHOUT CONSULTATION) SC3 CONTROLLER LEAVES CONFERENCE TO ADD A STATION OR TRUNK	E1	5	**5**	5																																														E1
SC 4 CONTROLLER RETURNS TO CONFERENCE AFTER DIAL TONE OR PARTIAL DIALING SC 5 CONTROLLER RETURNS TO CONFERENCE WHEN CALLED STATION OTHER THAN DIAL REPEATING TIE TRK STA IS BUSY OR DA SC 6 (MD) CONTROLLER AND CONSOLE ATTENDANT ADD CO TRK PARTY TO CONFERENCE; CKT NOT EQUIPPED FOR CONSULTATION SC 7 (MD) CONTROLLER RELEASES FROM ATTENDANT TRK WITH PORTS 1-4 IN USE AND PORT 5 RESERVED FOR CO TRK CONNECTION	E2	5	**5**	5																																														E2

SUPPORTING INFORMATION

CATEGORY	NO.
EQUIPMENT DWGS	J-58829AD-( )
EQUIPMENT DESIGN REQ	J-58829

SHEET INDEX NOTES

1. WHEN CHANGES ARE MADE IN THIS DRAWING, ONLY THOSE SHEETS AFFECTED WILL BE REISSUED.
2. THIS SHEET INDEX WILL BE REISSUED AND BROUGHT UP TO DATE EACH TIME ANY SHEET OF THE DRAWING IS REISSUED, OR A NEW SHEET IS ADDED.
3. THE ISSUE NUMBER ASSIGNED TO A CHANGED OR NEW SHEET WILL BE THE SAME ISSUE NUMBER AS THAT OF THE SHEET INDEX.
4. SHEETS THAT ARE NOT CHANGED WILL RETAIN THEIR EXISTING ISSUE NUMBER.
5. THE LAST ISSUE NUMBER OF THE SHEET INDEX IS RECOGNIZED AS THE LATEST ISSUE NUMBER OF THE DRAWING AS A WHOLE.

DWG ISS	CD ISS	DWG ISS	CD ISS	DWG ISS	CD ISS
1	1	2D	1 APP 1D	3D	1 APP 2D
4D	1 APP 3D				

DWG ISS	CD ISSUE	DATE	DRAWN	APPD.
5D	2D	5-23-66	JJH SAK RCL	RRS RAV GFH
6D	2D APP 1D	1-12-67	BMM PJS RCL	RRS LAH RHP
7A	2D APP 2A	3-24-67	ROZ PJS RRR	RRS LAH LDJ

7

SD-66902-01 IJ07

PBX SYSTEMS
NO. 756A
DIAL CONFERENCE TRUNK CIRCUIT
STATION CONTROLLED

(2)
(DIAL CONF STA CONT)

AT & T CO
STANDARD

SD-66902-01-AI
29 SHEETS

BELL TELEPHONE LABORATORIES
INCORPORATED

DWG SIZE 6S

PRINTED IN U.S.A.

SD-66902-01-AI

PRINTED IN U.S.A.
E-79205 (4-66)

TCI Library www.telephonecollectors.info

APPARATUS INDEX

DESIG	LOCATION FS	APP FIG.	EQPT
RELAYS			
BC1	2B4	1	2-AA
BC2	2B5	1	2-AA
BC3	2B6	1	2-AA
BC4	2B7	1	2-AA
BC5	2B8	1	2-AA
BC5S	6H3	3	2-Y
BCH1	2F6	1	2-Z
BCH2	2F6	1	2-Z
BCH3	2F6	1	2-Z
BCH4	2F6	1	2-Z
BCH5	2F6	1	2-Z
BRI	6C3	3	2-Y
BR2	6C3	1	2-AA
BY	4B6	1	2-Z
CF	6G3	3	2-Y
CO	3B/B6	2	2-Z
CRI	2D4	1	2-AA
CR2	2D5	1	2-AA
CR3	2D6	1	2-AA
CR4	2D7	1	2-AA
CR5	2D8	1	2-AA
CRDK	2C8	1	2-AA
DO	1G4	1	2-AA
DOA	1H4	3	2-Y
DOM	2A9	1	2-AA
DOR	1C3	1	2-AA
DI	1F7	1	2-AB
D8	1D4	1	2-AA
D9W	2F4	1	2-AB
FO	4F8	1	2-AB
FOM	4E9	1	2-Z
L	1E8	1	2-AB
MC	1F4	1	2-AA
ON	1B2	1	2-AA
ONA	1C2	1	2-Z
ONRL	1E6	1	2-AA
P			
PM	1H8	1	2-AB
PMR	6F3	3	2-Y
RRL	4G8	1	2-Z
RS	1E4	1	2-AB
RSI	6A3	3	2-Y
RT	4F5	1	2-Z
RV	2B3	1	2-AB
S1	3A/E1	1	2-AB
S2	3A/F3	1	2-AB
S3	3A/F5	1	2-AB
S4	3A/F7	1	2-AB
S5	3B/G4	1	2-AB
SRC	1A2	1	2-AB
TE	4B8	1	2-Z
TEA	4C8	1	2-AB
TP1	4B3	1	2-AB
TP2	4B3	1	2-AB
TP3	4C3	1	2-AB
TP4	4D3	1	2-AB
TP5	4D3	1	2-AB
TPDK	4DO	1	2-AA
Z	2H4	1	2-AA

DESIG	LOCATION FS	APP FIG.	EQPT
INDUCTORS			
L1	3B/F2	2	2-Z
L2	3A/H1	3	2-Y

DESIG	LOCATION FS	APP FIG.	EQPT
RESISTORS			
DO	1G4	3	2-Y
FO	4D9	2	
P	4G4	3	2-Y
RD	1E5	1	
RO	1C8	1	2-AA
RI	3A/E1	1	2-AB
R2	3A/E3	1	2-AB
R3	3A/E5	1	2-AB
R4	3A/E7	1	2-AB
R5	3B/E3	1	2-AB
R6	2G5	1	2-Z
R7	2H5	1	2-Z
RE	1D6	1	2-Z
RS	1A8	1	2-Y
M	4G4	3	
S1	3A/G1	1	2-Z
S2	3A/H2	1	2-Z
S3	3A/H5	1	2-Z
S4	3A/H6	1	2-Z
S5	3B/H1	1	2-Z
T	4D9	2	
T2R	3B/D0	3	
T2T	3B/D0	3	

DESIG	LOCATION FS	APP FIG.	EQPT
DIODES			
A	4G4	1	2-AB
B	4G3	1	2-AB
BC5	2C8	3	
BRI	6D3	3	
COO	1B3	2	
CO1-4	2F6	2	
D8	1C3	3	
FO	4F8	2	
RSI	6C1	3	
RT	4G5	3	

DESIG	LOCATION FS	APP FIG.	EQPT
CAPACITORS			
A	1B8	1	2-AA
B	3A/E1	1	2-AB
C	3A/E3	1	2-AB
D	3A/E5	1	2-AB
E	3A/E7	1	2-AB
F	3B/E3	1	2-AB
G	4H1	1	2-AB
H	4H2	1	2-AB
K	4G2	1	2-Z
L	1D6	1	2-Z
P	4G4	3	

DESIG	LOCATION FS	APP FIG.	EQPT
THERMISTOR			
A	2D2	1	2-AB
B	1C1	1	2-Z
C	4G7	1	2-Z

DESIG	LOCATION FS	APP FIG.	EQPT
REPEAT COIL			
T1	4F3	1	2-Z

DESIG	LOCATION FS	APP FIG.	EQPT
VARISTORS			
FO1	4D9	2	
FO2	4D9	2	

DESIG	LOCATION FS	APP FIG.	EQPT
CONNECTORS			
CA	5B0	1	
FO	4C8	2	
RD	1E5, 4A8	1	

DESIG	LOCATION FS	APP FIG.	EQPT
PLUG IN UNITS			
CA	5D4	1	
FO	4A8	1	
	4D8	2	
RD	1C6	1	
	1E4		

LEAD INDEX

DESIG	FS LOC
LINE LINK & MARKER CKT	
CCC	1H1
DO	1G1
D8	1D1
D9	2H2
HM5	1B5
IT5	1B4
MONI	3B/B5
MON2	3B/B5
OTG	2F7
RI	3A/A0
RI	3A/A2
RI	3A/A4
RI	3A/A6
RI	3B/A1
R2	1A7
RLS	1F1
RS	1E1
SI	3A/A0
SI	3A/A2
SI	3A/A4
SI	3A/A6
SI	3B/A1
S2	1A6
TI	3A/A0
TI	3A/A2
TI	3A/A4
TI	3A/A6
TI	3B/A1
T2	1A7

DESIG	FS LOC
PWR SUPORRING(INT) CKTS	
BT	4H1
RING G OR RG	4F6
RI	4F6

DESIG	FS LOC
6 PORT CONFERENCE CKT	
RO	1B8
RI	3A/D1
R2	3A/D3
R3	3A/D5
R4	3A/D7
R5	3B/D3
TO	1C8
TI	3A/D1
T2	3A/D3
T3	3A/D5
T4	3A/D7
T5	3B/D3

DESIG	FS LOC
REL TIME DEL CKT, RD	
ON1	1D6
ON2	1D6
ON3	1D6
ON4	1D5
RD1	1E5
RD2	1E5
RD3	1E5
RD4	1D5

DESIG	FS LOC
552A,B,D,E,605A,607A,B, OR 608A JACK CKT	
R	3B/C4
S	3B/D4
SL	3B/C4
T	3B/C4

DESIG	FS LOC
REL TIME DEL CKT, FO	
FO1	4D8
FO2	4C8
FO3	4D8
FO4	4C8, 4B8
FO5	4B8
FO6	4B8
FO7	4B8

DESIG	FS LOC
608D JACK AND LAMP CKT	
R	3B/C4
S	3B/D4
SL	3B/C4
T	3B/C4

OPTION INDEX

APP OR WIRING	LOCATION
3	APP FIG. 3, 1F7 1C4, 1D3, 1F6, 1G3, 1G4, 1G7, 1G8, 2E7, 2E8, 2E9, 2C9, 2F1, 4E3, 4G4, 2F0, 4H3, 2G6
2	APP FIG 2, 2F6, 3B/E2, 3B/F2, 4F8
Z	1B1, 1C0, 1C2, 2F5, 2F6, APP FIG. 1
Y	1B1, 1C0, 1C1, 1C2, 2E5, 2F5, 2F6, APP FIG 1
W	3B/G2, 3B/G3, 4F8, 4E9, 3B/C1, 2
V	1C0-3, 1D3, 1D5, 1D6, 1F6, 1G3, 1G8, 1H4, 2E0, 2D8, 2F1, 2F6, 3B/H2, 3B/H3, 1F7 2C4, 2C9, 2B4, 2B5-B, 2E7, 2G6 4E7, 4G4, 5G1, APP FIG 1 & 2, 4F4, 4C9
T	APP FIG 1
S	APP FIG 1
R	APP FIG 1
Q	APP FIG 1
N	6C1
M	1D5, 1E6, 4C9, 4E4, 5G1, APP FIG. 1

DRAWING ISSUE	
1	EJV KFJ
3D	JJH RKU GFH
4D	PJS RKU GFH
5D	JJH SAK GFH
6D	PJS RHF
7A	ROZ PJS LDJ

7

DIAL CONFERENCE TRUNK CIRCUIT (2)

SD-66902-01-A2

BELL TELEPHONE LABORATORIES INCORPORATED

DWG SIZE 6S

PRINTED IN U.S.A.

TCI Library www.telephonecollectors.info

SHEET INDEX

CONTENTS	SHEET NO.	ISSUE NO. 5	6	7	8	9	10	11	12	13	14	15	16	17	18	19	20	21	22	23	24	25	26	27	28	29	30	31	32	33	34	35	36	37	38	39	40	41	42	43	44	45	46	47	48	49	50	51	52	53	SHEET NO.
SC8 CONTROLLER RECALLS CONSOLE ATTENDANT TO CO TRK WITH ALL PORTS IN USE AND A TRK ON PORT 5 SC9 CONTROLLER DIALS 9 OR 9_ TO GET CO TRK AND SERVICE IS DENIED SC10 ORIGINATOR DISCONNECTS WHILE REGISTER IS ATTACHED	E3	5	5	5																																																E3
SC11 ORIGINATOR DISCONNECTS WHILE ON CONFERENCE AMPLIFIER SC12 ADDED STATION DISCONNECTS WITH ORIGINATOR IN CONTROL AND 3 OR MORE STATIONS IN CONFERENCE SC13 ADDED STATION NOT IN CONTROL DISCONNECTS WITH ORIGINATOR DISCONNECTED; THREE OR MORE STATIONS IN CONFERENCE SC14 NEXT TO LAST STATION DISCONNECTS WITH ORIGINATOR DISCONNECTED SC15 STATION ON PORT 3 ASSUMES CONTROL AFTER ORIGINATOR DISCONNECTS	E4	5	5	5																																															E4
SC16 STATION 3 DISCONNECTS AFTER TAKING CONTROL ASSUME STA ON CONF AMP & SOME PORTS NOT USED SC17 CONTROLLER IN CONFERENCE FLASHES SWITCHHOOK WITH ALL PORTS BUSY (NO CO TRK IN CONFERENCE) SC18 (MD) CONTROLLER ADDS DIAL REPEATING TIE TRUNK; REGISTER ATTACHED (WITHOUT CONSULTATION)	E5	5	5	5																																																E5
SC19 (MD) CONN PARTY INTO CONF THRU CORD SWITCHBOARD WITHOUT CONSULTATION SC20 CONTROLLER RECALLS ATND WITH ALL PORTS IN USE AND PORT 5 CONN THRU CORD SWITCHBOARD SC21 NEXT TO LAST STA DISCONNECTS WITH ORIGINATOR DISCONNECTED AND LAST STA CONN TO PORT 5 THRU CORD SWITCHBOARD	E6	5	5	5																																																E6
SC22 ADDING FIRST STA (WITH CONSULTATION) CONF CONT COMPLETES DIALING-REGISTER CALLS MARKER SC23 ADDING ANY STA AFTER THE FIRST ONE (WITH CONSULTATION): CONF CONT COMPLETES DIALING; REGISTER CALLS MARKER AND REVERSES BATTERY, PRIVATE CONSULTATION SC24 CONT AND CALLED STA ENTER CONF (WITH CONSULTATION): CONT FLASHES SWITCHOOK TO REACH CONFERENCE BUSS	E7	5	5	5																																																E7
SC25 CALLED STA DISCONNECTS DURING CONSULTATION (WITH CONSULTATION) SC26 CONT ADDS DIAL REPEATING TIE TRUNK (WITH CONSULTATION) AT LEAST ONE STA ON CONFERENCE BUSS-REGISTER ATTACHED SC27 CONTROLLER RETURNS TO CONF WHEN DIAL REPEATING TIE TRUNK IS BUSY OR DA	E8	5	5	5																																																E8
SC 28 CONTROLLER CALLS ATND TO ADD CO PARTY SC 29 CONSOLE ATND DIALS IN CO PARTY	E9	5	5	5																																																E9
SC 30 SWBD ATND PLUGS CO PARTY INTO PORT 5 SC 31 CONTROLLER FLASHES TO INCLUDE BOTH CONTROLLER AND CO PARTY IN CONFERENCE	E10	5	5	5																																																E10

DRAWING ISSUE	
5D	JJH SAK GFH
6D	BMM PJS RHP
7A	ROZ PJS LDJ

7

DIAL CONFERENCE TRUNK CIRCUIT (2)

SD-66902-01-A3

BELL TELEPHONE LABORATORIES INCORPORATED

DWG SIZE 6S

PRINTED IN U.S.A.

SD-66902-01-A3

TCI Library www.telephonecollectors.info

SHEET INDEX

CONTENTS	SHEET NO.	ISSUE NO. 5	6	7	8	9	10	11	12	13	14	15	16	17	18	19	20	21	22	23	24	25	26	27	28	29	30	31	32	33	34	35	36	37	38	39	40	41	42	43	44	45	46	47	48	49	50	51	52	53	54	SHEET NO.
SC 32 CO PARTY CONNECTED THRU CORD SWBD DISCONNECTS WHILE ON CONSULT BUSS SC 33 CO PARTY CONNECTED THRU CORD SWBD DISCONNECTS WHILE ON CONFERENCE SC 34 ORIGINATOR DISCONNECTS WHILE ON CONSULT BUSS WITH ANOTHER STATION	E11	5	5	5																																																E11
CKT REQT TABLES BC TO Z	F1	5	5	5																																															F1
CAD 1	G1	4	6	6																																															G1

DRAWING ISSUE

5B	JJH SAK GFH	HW
6D	BMW PJS RNP	
7A	ROZ PJS LDJ	

7

DIAL CONFERENCE TRUNK CIRCUIT

BELL TELEPHONE LABORATORIES INCORPORATED

SIZE 6S

SD-66902-01-A4

PRINTED IN U.S.A.

TCI Library www.telephonecollectors.info

FS I

OFF NORMAL AND CALLING CONTROL

SRC
SR
L
6
11
ON
RR
4G9
1U
1L
P-1000
2U
2L
S-42
-48
SRC
12

ONRL
ON
11
12
SRC
1
ON
1U
1L
2500
-48
-48
Z
Y
8
ON
SRC
4
ONA
1U
2U
2450
-48
COO
COI
3B/C6

MARKER
IT-1
(SEE NOTE 2)
11
COTA
COTB
(SEE NOTE 2)
HM-2
IT5
HM5
DO
8
MC
4

TO LINE, LINK, AND MARKER CKT
TIE TRK TERMINATION ASSIGNED AS
PORT 0 (SEE NOTE 1)
S2
ONA
12
BY
1

R2
T2
P
CONFERENCE
AMPLIFIER
CKT
CRDK
10
RO
6
T2
A
T 2
S 3.83
RO
T 898
S 600
A
C2
9
TO
7
T1
CRDK
15EO
R6
4GO
T6
4FO
R7
3B/C2
T7
3B/C2

P
4
D8
2
1
D8
6BO
RT
5
SRC
7

RELAY TIME DELAY CIRCUIT
ED-66715 ( )
RD
12
7
10
1

RD
12
7
10
1
ON4
ON3
R8
.75
MEG
ON2
L
4.28
UF
ON1
ONA
9
RD
D8
8
D8
1U
2U
2450
-48

RD
RELAY TIME
DELAY
CIRCUIT
ED-99556 ( )
OR
1/2 ED-99555 ( )
2
RD2
3
RD3
1
RDI
4
RD4
RD
1.54
MEG
ONRL
1U
2U
2450
-48

L
1L
1U
P-400
2U
2L
S-400
-48

TKB8
10
D8
MC
12
TKA0
8
RS
MC
10
RS
8
RS
1U
2U
640
-48
RT
11
DI
4

CRD 4G9
ON
5
CRDK
11
L
8
12
D8
10
DI
1L
2L
640
-48
PM
12
BRI
1
DO
9
TPDK
2
12
TE
RT
7

RLAA
7
RLS
D8
PM
9
P
1
MC
5
MC
1U
1L
700
-48

S5
8
BCH5
10
DO
100
-48
TKO
12
DO
MC
1
DO
6
Z,Y
DO
1U
1L
Z 950
Y 700
-48
DOA
1L
2L
2450
-48

CRDK
8
PMR
3
9
MC
PM
1U
2U
2450
-48
ON
10
DI
PM
8
5
6
CF
3

CCC
-48
2U
1U
CCC
MC
2
DOR
3
ON
6

MARKER

SHEET NOTE:
1. THE TIE TRUNK TERMINATIONS ARE ON TRK TERM 80-89, AND THESE NEED NOT BE ASSIGNED CONSECUTIVELY. SEE NOTE 301.
2 USE TERMINAL OF TIE TRUNK ASSIGNED AS PORT 5.

DRAWING ISSUE	
1	WFF KFJ
2D	SAK WFF KKJ
3D	PJS RWW GFH
4D	JJH SAK GFH
5D	JJH SAK GFH
6D	BMM PJS RHP
7A	RDZ PJS LDH

7

DIAL CONFERENCE TRUNK CIRCUIT (2)

SD-66902-01-B1

BELL TELEPHONE LABORATORIES INCORPORATED

DWG SIZE 6S

PRINTED IN U.S.A.

SD-66902-01-B1

TCI Library www.telephonecollectors.info

FS 2

STEERING, CONNECT, AND BUSY BACK CONTROL

DRAWING ISSUE		
1	KFJ	HW
3D	PJS RKU GFH	HW
4D	JJH SAK GFH	A
5D	JJH SAK GFH	
6D	BMM PJS RHP	

BC2 BC3 BC4 BC5 BC1 BC2 BC3 BC4 BCH5 BC1 RV 1L 2L 2450 -48

BCH1 BCH2 BCH3 BCH4 BCH5 ONA DO DOM BC1 BC2 BC3 BC4 BC5 CO BRI RT CRI CR2 CR3 CR4 CR5 ON Z BC5 RT 4G5 BR 6C1 CRDK 1U 2U 2450 -48 6F3 DO -48

ON RRL PM SRC DI CRDK RV A CRI SI CR1 CR2 CR3 CR4 CR5 S1 S2 S3 S4 S5 BR2 DOA BC5S DO BRI

ON D9W PM CF DI DOM BC5 BC5S BC4 BC3 BC2 BC1 D9W 1U 2U 640 R6 700 R7 700 -48 Z 1L 2L 960 ON L Z

MARKER TKB9 10 D9 MC 3

BCH 1-4 SI-4 1U 1L 1050 -48 CO1-4 CO2 3B/B7

S5 BCH5 S5 1U 1L 1050 -48

OTG OT— (SEE NOTE 1) LHM — (SEE NOTE 1) IN— (SEE NOTE 1) -48

MARKER

SHEET NOTES:

1. USE RELAY APPROPRIATE TO TIE TRUNK ASSIGNED AS PORT 5.

6

DIAL CONFERENCE TRUNK CIRCUIT

SD-66902-01-B2

BELL TELEPHONE LABORATORIES INCORPORATED

DWG SIZE 6S

PRINTED IN U.S.A.

TCI Library www.telephonecollectors.info

PART OF FS3

CALLING PORTS

TO LINE, LINK AND MARKER CKT TIE TRK TERMINATION ASSIGNED AS PORT 1 (SEE NOTE 1)

TO LINE, LINK AND MARKER CKT TIE TRK TERMINATION ASSIGNED AS PORT 2 (SEE NOTE 1)

TO LINE, LINK AND MARKER CKT TIE TRK TERMINATION ASSIGNED AS PORT 3 (SEE NOTE 1)

TO LINE, LINK AND MARKER CKT TIE TRK TERMINATION ASSIGNED AS PORT 4 (SEE NOTE 1)

R7 3B/CO

T7 3B/CO

TEA 3B/CO

CRR 3B/GO

CRT 3B/GO

SHEET NOTES:

1. THE TIE TRUNK TERMINATIONS ARE ON TRK TERM 80-89, AND THESE NEED NOT BE ASSIGNED CONSECUTIVELY, SEE NOTE 301.

DRAWING ISSUE	
SUPERSEDES SHEET B3 ISS 2D	
3D	JJH RKJ GFH
5D	JJH SAK GFH

DIAL CONFERENCE TRUNK CIRCUIT (2)

SD-66902-01-B3A

BELL TELEPHONE LABORATORIES INCORPORATED

6S

5

SD-66902-01-B3A

TCI Library www.telephonecollectors.info

PART OF FS 3

CALLING PORTS

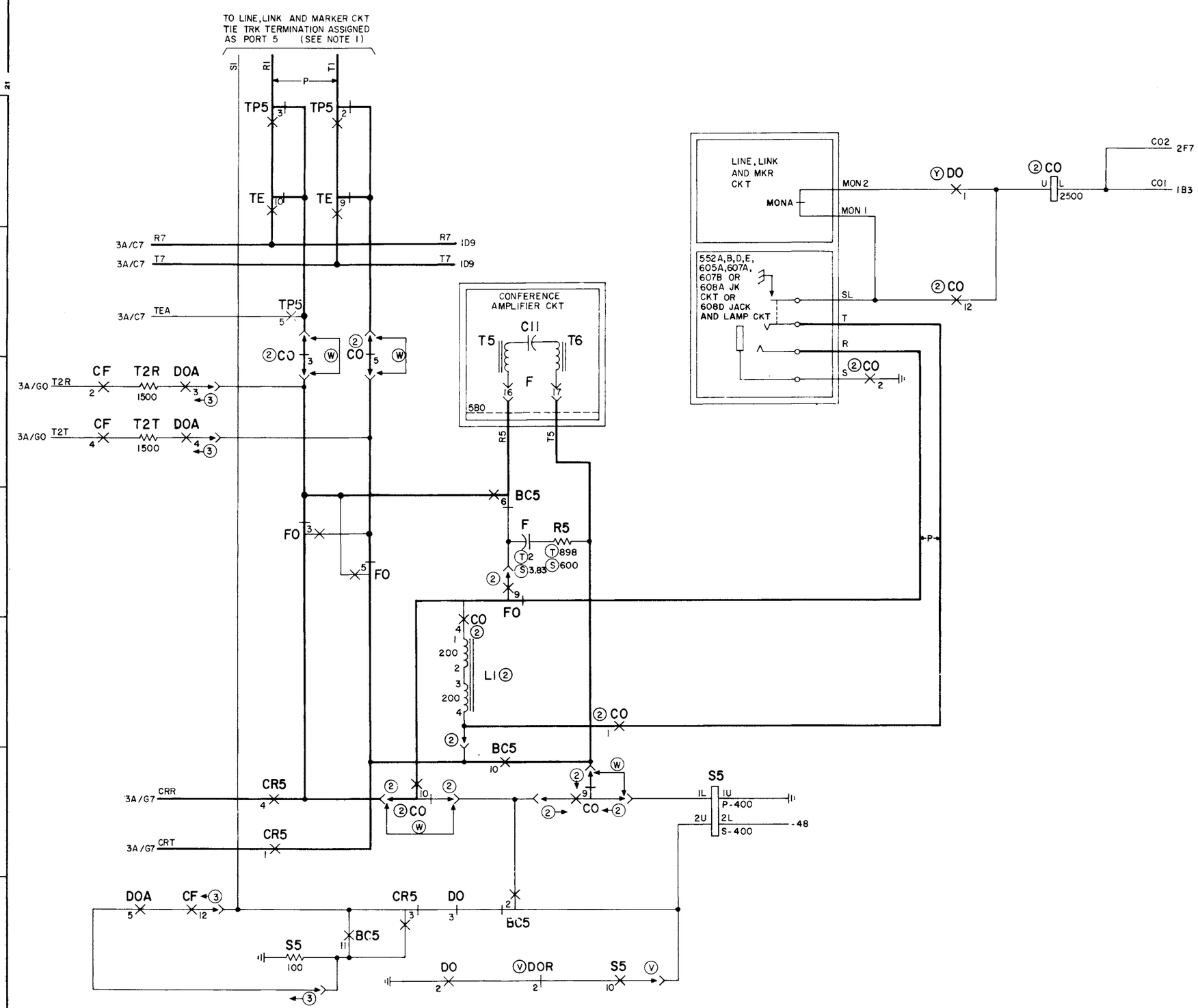

SHEET NOTES:

1. THE TIE TRUNK TERMINATIONS ARE ON TRK TERM. 80-89, AND THESE NEED NOT BE ASSIGNED CONSECUTIVELY, SEE NOTE 301.

DRAWING ISSUE	
3D	JJH RKU GFH
4D	JJH SAK GFH
5D	JJH SAK GFH
6D	BMV PJS RHP

DIAL CONFERENCE
TRUNK CIRCUIT

SD-66902-01-B3B

BELL TELEPHONE LABORATORIES
INCORPORATED

DWG SIZE 6S

PRINTED IN U.S.A.

TCI Library www.telephonecollectors.info

FS 4

RINGING AND TRANSFER CONTROL

BCH1 BCH2 BCH3 BCH4 BCH5

TPI TP2 TP3 TP4 TP5

SI S2 S3 S4 S5

BCI BC2 BC3 BC4 BC5

TPDK

RRL RV TE TEA BY ONA RV

RD FO FOM

RELAY TIME DELAY CKT ½ ED-99555-( )

RELAY TIME DELAY CKT ED-99541-( )GR1

DOR DOA CF CO SRC

T 866K

FO 680

FO1 FO2

P-1000 S-42

P-220 S-1150

P 1920 640

MC 200

BR2 DO

TI

D9W

RS

RING G OR RG

RI

POWER SUPPLY CKT OR RINGING CKT (INTERRUPTER)

3A/FO CRT

ID9 T6

ID9 R6

3A/FO CRR

BT

G .05

H .05

K

RT

CRD

RR

RRL 1500

C

D8

P

A

B

TE 2500

TEA 2450

BY 2450

TPDK 2450

TP1 2450

TP2 2450

TP3 2450

TP4 2450

TP5 2450

S1 2450

S2 2450

S3 2450

S4 2450

S5 2450

BC1 2450

BC2 2450

BC3 2450

BC4 2450

BC5 2450

BCH1 2450

BCH2 2450

BCH3 2450

BCH4 2450

BC5 2450

RRL 2450

RV 2450

TE 2450

TPDK 2450

TEA 2450

BY 2450

AO 5G2

DRAWING ISSUE

/	JFF KFJ	HW
2D	SAK JFF KFJ	HW
3D	PJS RKU GFH	
4D	JJH SAK GFH	
5D	JJH SAK GFH	

DIAL CONFERENCE TRUNK CIRCUIT

SD-66902-01-B4

BELL TELEPHONE LABORATORIES INCORPORATED

DWG SIZE 6S

PRINTED IN U.S.A.

5

SD-66902-01-B4

TCI Library www.telephonecollectors.info

FS 5

CONFERENCE BRIDGE CIRCUIT

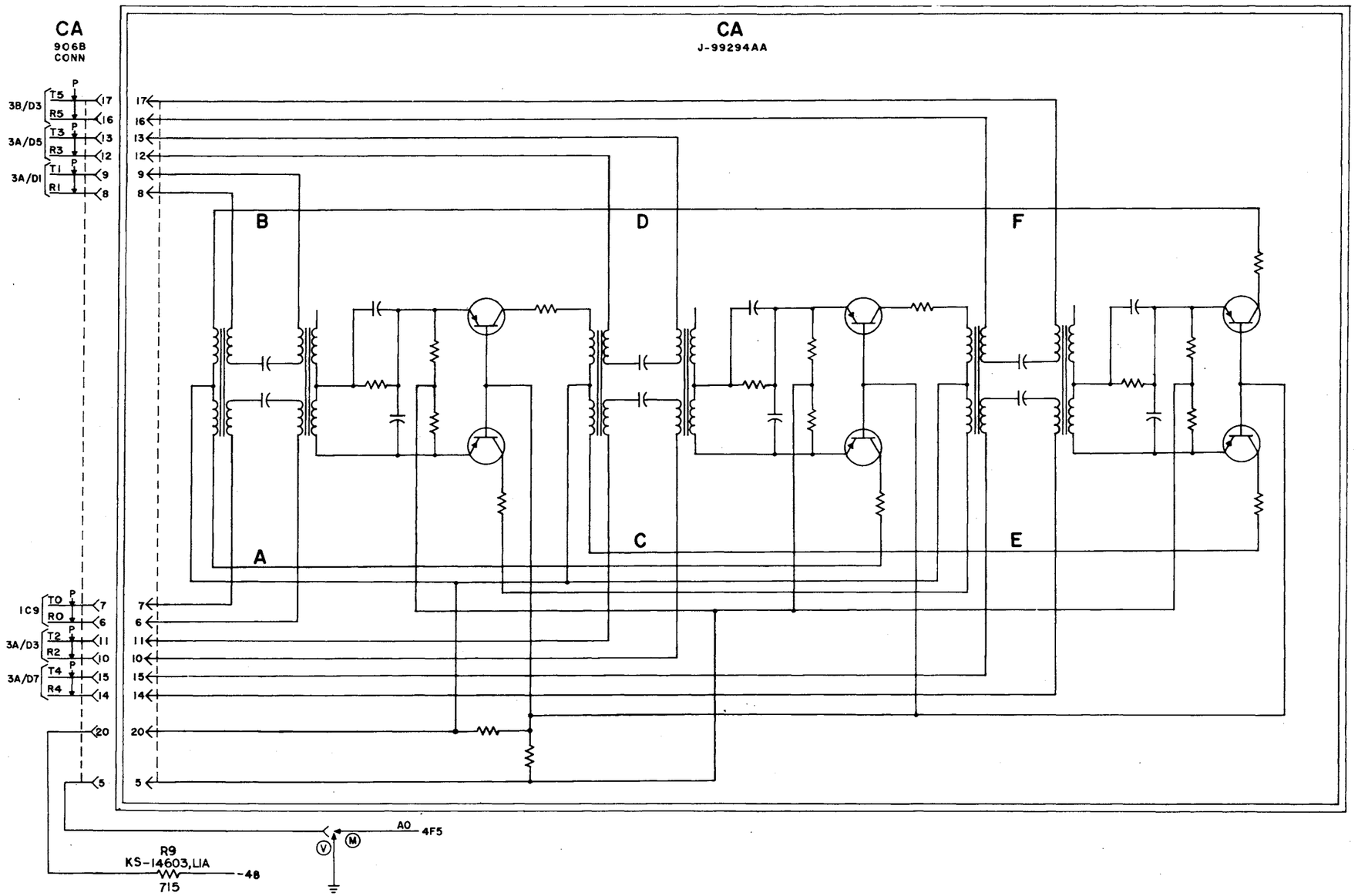

DRAWING ISSUE	
1	SAK KFJ HW
5D	JJH SAK GFH

5

DIAL CONFERENCE
TRUNK CIRCUIT

SD-66902-01-B5

BELL TELEPHONE LABORATORIES
INCORPORATED

DWG SIZE 6S

PRINTED IN U.S.A.

TCI Library www.telephonecollectors.info

FS 6

PRIVATE CONSULTATION

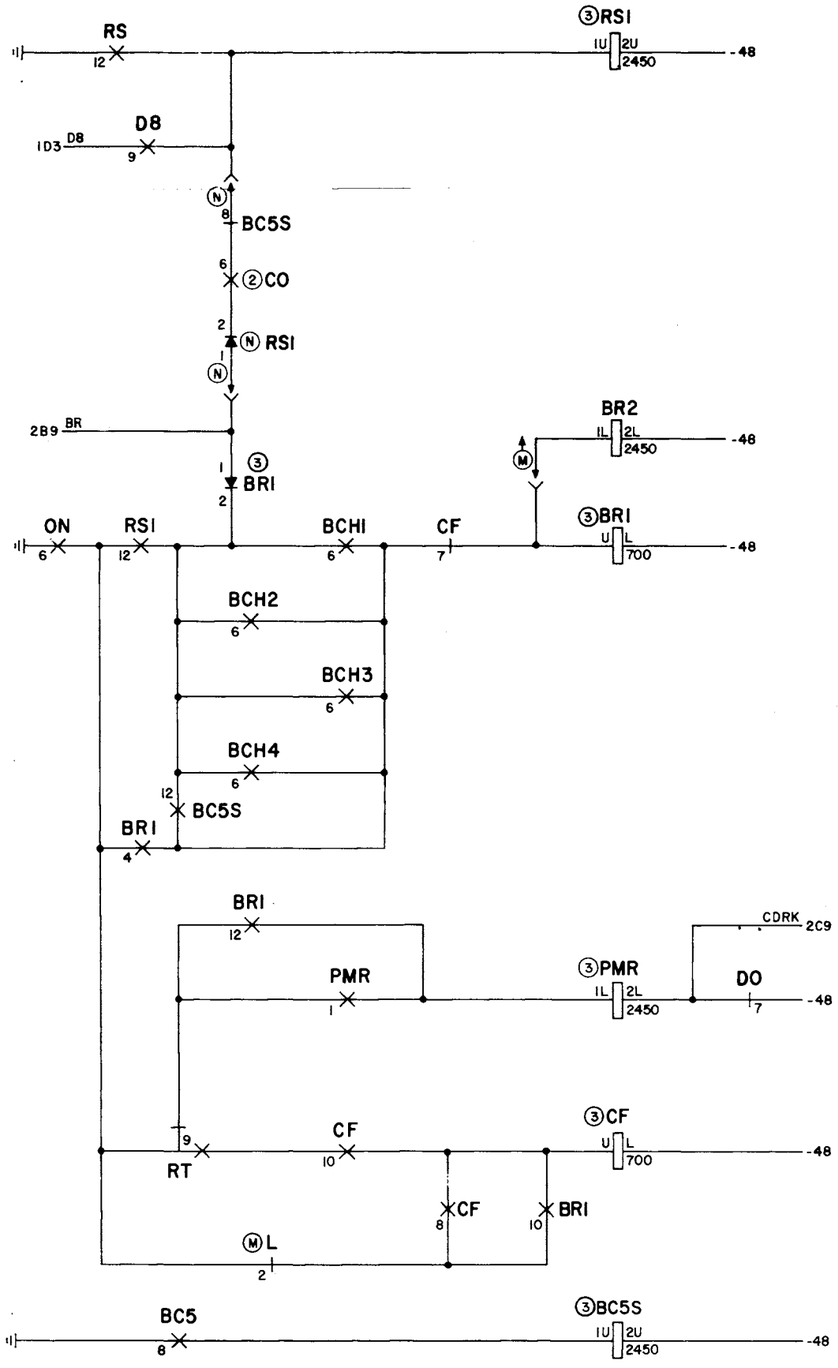

DRAWING ISSUE
5D JJH SAK GFH

SD-66902-01-B6

DIAL CONFERENCE TRUNK CIRCUIT

BELL TELEPHONE LABORATORIES INCORPORATED

DWG SIZE 6S

SD-66902-01-B6

PRINTED IN U.S.A.

E-7421 (10-61)

TCI Library www.telephonecollectors.info

APP FIG. 1

RELAY

DESIG	BC1		BC2		BC3		BC4		BC5		BCH1		BCH2		BCH3		BCH4		BCH5		BY		ONA		DESIG
CODE	AG20		AG20		AG20		AG20		AG20		AG24		AG24		AG24		AG24		AG24		AK4				CODE
OPTION																									OPTION
	CONT ARR	LOC	CONT ARR	LOC	CONT ARR	LOC	CONT ARR	LOC	CONT ARR	LOC	CONT ARR	LOC	CONT ARR	LOC	CONT ARR	LOC	CONT ARR	LOC	CONT ARR	LOC	CONT ARR	LOC	CONT ARR	LOC	
12	M	4B2	M	4B2	M	4C2	M	4D2	M	4D2													M	IB6	12
11	M	3A/GI	M	3A/G3	M	3A/H5	M	3A/H6	M	2B/HI													EBM	4B4	11
10	EBM	3A/EI	EBM	3A/E3	EBM	3A/E5	EBM	3A/E6	EBM	3B/F2	M	4E5	M	4E6	M	4E6	M	4E7	M	a			EBM	2A8	10
9	M	2B0	M	2A0	M	2A0	M	2AI	M	2AI													EMB	ID5	9
8	EMB		EMB	2B0	EMB	2BI	EMB	2BI	EMB	a	BM	4B0	BM	4B0	BM	4B0	BM	4C0	BM	4C0			EMB	4D5	8
7																									7
6	EMB	3A/EI	EMB	3A/E3	EMB	3A/E5	EMB	3A/E6	EMB	3B/E3	BM	6D2	BM	6DI	BM	6E2	BM	6EI	BM	2B2					6
5																					EMB	4E4			5
4	EBM	4D5	EBM	4D6	EBM	4D6	EBM	4D7	EBM	4D7	M	2A3	M	2A4	M	2A5	M	2A6	M	2A7	EMB	4A5			4
3	M	2B3	M	2B4	M	2B5	M	2B6	M	2B7											EBM	4B5			3
2	EBM	3A/FI	EBM	3A/F3	EBM	3A/F5	EBM	3A/F6	EBM	3B/G2											EBM	4E4			2
1	M	2HO	M	2HO	M	2GO	M	2GO	M	4E7											M	IB6			1
COIL		2B4		2B5		2B6		2B7		2B8		2F6		2F6		2F6		2F6		2G6		4B6		IC2	COIL

2 (V) 2FO, 6HI

a (V) ICI, (3) IG4

RELAY

DESIG	CRI		CR2		CR3		CR4		CR5		CRDK		DI		D9W		DO		DO				FO		DESIG
CODE	AK4		AK4		AK4		AK4		AK4				AK30				AF98		AJ15				AG44		CODE
OPTION																	Z		Y						OPTION
	CONT ARR	LOC	CONT ARR	LOC	CONT ARR	LOC	CONT ARR	LOC	CONT ARR	LOC	CONT ARR	LOC	CONT ARR	LOC	CONT ARR	LOC	CONT ARR	LOC	CONT ARR	LOC	CONT ARR	LOC	CONT ARR	LOC	
12			M	3A/G2			M	3A/G6			M	2D2			M	2F3			EBM	4G4			EM	4F8	12
11			EBM	2C4			EBM	2C6			EBM	IF5			EBM	4GI			EBM	4G4			M		11
10			EBM	3A/G3			EBM	3A/H6			EBM	IB8			EBM	4FI	EBM	2B9	EBM	2B9			M		10
9			EMB	3A/F2			EMB	3A/F6			EMB	IC8			EMB		B		EBM	IG6			BM	3B/E2	9
8			EMB	2D4			EMB	2D6			EMB	IG6			EMB	2F3	EBM	IB5	EMB	IB5					8
7																	B	7C8	EBM	6F5			BM	4E8	7
6																	EMB	IG3	EMB	IG3					6
5	EMB	2D3			EMB	2D5			EMB	2D7			EMB	IH7			B	2E8	EMB	a			BM	3B/E2	5
4	EMB	3A/FO			EMB	3A/F4			EMB	3B/GI			EMB	IF4			EBM	2A9	EBM	2A9			M		4
3	EBM	3A/GI			EBM	3A/H5			EBM	3B/H2			EBM	a			B	3B/H2	EBM	3B/H2			BM	3B/EI	3
2	EBM	2C3			EBM	2C5			EBM	2C7			EBM	2DI			M	3B/H2	EBM	3B/H2			M		2
1	M	3A/FO			M	3A/G4			M	3B/GI			M	2D2					EBM	3B/B5			M	4F8	1
COIL		2D4		2D5		2D6		2D7		2D8		2C8		IF8		2F4		IG4		IG4				4F8	COIL

a (V) 2FI, (3) 2FO

2 (V) 2E7, (3) 2E8

CAPACITOR

DESIG	LOC	CODE
(T) A	IB8	542F, 2
(T) B	3A/EI	542F, 2
(T) C	3A/E3	542F, 2
(T) D	3A/E5	542F, 2
(T) E	3A/E7	542F, 2
(T) F	3B/E3	542F, 2
G	4HI	542W, .05
H	4H2	542W, .05
K	4G2	542F, 2
(V) L	ID6	437QA, 4.28
(S) A	IB8	705G, 3.83
(S) B	3A/EI	705G, 3.83
(S) C	3A/E3	705G, 3.83
(S) D	3A/E5	705G, 3.83
(S) E	3A/E7	705G, 3.83
(S) F	3B/E3	705G, 3.83

REPEAT COIL

DESIG	LOC	CODE
TI	4F3	202A, 25Ω

CONNECTOR

DESIG	LOC	CODE
(V) RD	ID6	KS-19198 LI
CA	5B0	906B
(M) RD	IE5, 4A8	910A

DIODE

DESIG	LOC	CODE
A	4H4	446F
B	4H4	446F

PLUG-IN UNIT

DESIG	LOC	CODE
(V) RD	ID6	ED-66715-( )
CA	5D4	J-99294-AA
(Q) RD	IE4	ED-99556-( )
(R) RD-FO	IE4, 4A8	ED-99555-( )

RESISTOR

DESIG	LOC	CODE
(T) RO	IC8	145A, 898
(T) RI	3A/EI	145A, 898
(T) R2	3A/E3	145A, 898
(T) R3	3A/E5	145A, 898
(T) R4	3A/E7	145A, 898
(T) R5	3B/E3	145A, 898
[I] R6, R7	2G5, 2H5	19RL
(V) R8	ID6	145A, .75 MEG
R9	5GI	KS-14603 LIA, 715
RO	IC8	145A, 600
RI	3A/EI	
(S) R2, R3, R4, R5	3A/E3, 3A/E5, 3A/E7, 3B/E3	
(M) RD	IE5	145A, 1.54 MEG

RESISTOR

DESIG	LOC	CODE
[I] S1, S2	3A/GI, 3A/G2	19LC
[I] S3, S4	3A/H5	19LC
S5	3B/HI	188W, 100

THERMISTOR

DESIG	LOC	CODE
A	2D2	IC
(V) B	ICI	IF
C	4G7	IA

RELAY

DESIG	FOM		RRL				MC		ON		P		RS		RT		RV		PM		SI		S2		DESIG
CODE	AK37						AJ15		AF83		AK30				AJ58		AK4				AJ52		AJ52		CODE
OPTION																									OPTION
	CONT ARR	LOC	CONT ARR	LOC	CONT ARR	LOC	CONT ARR	LOC	CONT ARR	LOC	CONT ARR	LOC	CONT ARR	LOC	CONT ARR	LOC	CONT ARR	LOC	CONT ARR	LOC	CONT ARR	LOC	CONT ARR	LOC	
12			EBM	4G8			EBM	ID2	M	IB1			M	6BI	EM	4G6			M	IF6					12
11			EBM	4EO			EBM	4H4	M	IA1			EBM	4H2	B	IF3			EBM	2E4					11
10			M	4H7			EBM	IE2	M	IH6			EBM	4H3	M	2C7			EBM	2DI	M	2EI	M	2E5	10
9			B				EBM	IG8	M	2C3			EMB	4F3	BM	6GI			EMB	IG2					9
8			EMB	2DO			EMB	4G4	M	IBI			EMB	IE3					EMB	IH8	EMB	2F5	EMB	2F5	8
7							EBM	4G5	M	ICO					B	IF7									7
6							EMB		M	a											EMB	4B2	EMB	4B2	6
5	B						EMB	IG3	M	IF5	EMB				B	ID4	EMB								5
4	B						EBM	IC5	M	2DO	EMB	IC4			M	2C6	EMB				EBM	2D3	EBM	2D5	4
3							EBM	2H3	M	2G2	EBM	4H5			BM	2C5	EBM	2D2							3
2	EBM	4F8					EBM	IH2	M	2E3	EBM	r			M	2C4	EBM	4EI			M	4C5	M	4C6	2
1	M	4E8					EBM	IG2	M	4B7	M	IG3			M	2C3	M	4C4							1
COIL		4E9		4G8				IF4		IB2		4H4		IE4		4F5		2B3		IH8		3A/FI		3A/F3	COIL

(V) IH4, a 6DO

RELAY

DESIG	S3		S4		S5		SRC		TE		TPI		TP2		TP3		TP4		TP5		TEA				DESIG
CODE	AJ52		AJ52		AJ52		AG44		AJ5		AK4				AK4				AK4						CODE
OPTION																									OPTION
	CONT ARR	LOC	CONT ARR	LOC	CONT ARR	LOC	CONT ARR	LOC	CONT ARR	LOC	CONT ARR	LOC	CONT ARR	LOC	CONT ARR	LOC	CONT ARR	LOC	CONT ARR	LOC	CONT ARR	LOC	CONT ARR	LOC	
12							EM	IA2	EBM	IG6			M	4B6			M	4B7			M				12
11							M		EBM	4E2			EBM	3A/B2			EBM	3A/B6			EBM	3A/C0			11
10	M	2E6	M	2E7	M	a	M	2DO	EBM	3B/BI			EBM	3A/B2			EBM	3A/B6			EBM				10
9							BM		EBM	3B/BI			EMB	4BI			EMB	4CI			EMB	4B7			9
8	EMB	2F5	EMB	2F5	EMB	b			EBM	3A/B6			EMB	3A/C2			EMB	3A/C6			EMB	4E2			8
7							BM	ID4	EBM	3A/B6															7
6	EMB	4C2	EMB	4D2	EMB	4D2			EBM	3A/B4															6
5							BM	4E7	EBM	3A/B4	EMB	3A/CO			EMB	3A/C4			EMB	3B/CI					5
4	EBM	2D6	EBM	2D7	EBM	2D8	M	IC1	EBM	3A/B2	EMB	4AI			EMB	4CI			EMB	4DI					4
3							BM		EBM	3A/B2	EBM	3A/BO			EBM	3A/B4			EBM	3B/BI					3
2	M	4C6	M	4C7	M	4C7	M	4G6	EBM	3A/BO	EBM	3A/BO			EBM	3A/B4			EBM	3B/BI					2
1							M	IBI	EBM	3A/BO	M	4B5			M	4B6			M	4B7					1
COIL		3A/F5		3A/F7		3B/G4		IA2		4A7		4B3		4B3		4C3		4D3		4A7		4A7			COIL

a (V) 3B/H3, (3) 2G6

b (V) 2G6, (3) IG3

RELAY

DESIG	TPDK		D8		Z		DOM		DOR		BR2		ONRL		L		L		DESIG
CODE	AK4				AK8				V		AK4		M		AJ52		AJ138		CODE
OPTION															V		M		OPTION
	CONT ARR	LOC	CONT ARR	LOC	CONT ARR	LOC	CONT ARR	LOC	CONT ARR	LOC	CONT ARR	LOC	CONT ARR	LOC	CONT ARR	LOC	CONT ARR	LOC	
12			M	4H5			M	2B8					M				B	IF6	
11			EBM	IG2			M						EBM	4BO					
10			EBM	IF6			EBM	2FO					EBM		M	4G3	B	2G2	
9			EMB	6BI			EMB						EMB						
8			EMB	ID3			EM	IC2					EMB		EMB	IF6	M	4G3	
7																			
6															EMB	IAI	BM	IAI	
5	EMB	4EI			EM				EMB	IC2	EMB	2EO							
4	EMB	4C7			B	2C8			EMB	4D3	EMB	4H3			EBM	2G2	M	2G2	
3	EBM	4A5			EBM	2G4			EBM	IH3	EBM	4G4							
2	EBM	IF6			EBM				EBM	3B/G3	EBM				M		B	6HI	
1	M	4E3			M	2G2			M		M								
COIL		4DO		ID4		2H4		2A9		IC3		6C3				IE8		IE8	

DRAWING ISSUE

1	5AK	HW
	KFJ	
2D	SAK, AF, KFJ	HW
3D	JJH, RKU, GFH	
4D	JJH, SAK, GFH	
5D	JJH, SAK, GFH	
6D	BMM, PJS, RHP	
7A	ROZ, PJS, LDJ	

PMJD

DIAL CONFERENCE TRUNK CIRCUIT

BELL TELEPHONE LABORATORIES INCORPORATED

SD-66902-01-C1

7

TCI Library www.telephonecollectors.info

APP FIG. 2

RELAY

DESIG	CO									
CODE	AJ5									
OPTION										
	CONT ARR	LOC	CONT ARR	LOC	CONT ARR	LOC	CONT ARR	LOC	CONT ARR	LOC
12	EBM	3B/C5								
11	EBM	4D8								
10	EBM	3B/G2								
9	EBM	3B/G3								
8	EBM	2B9								
7	EBM	4F8								
6	EBM	6C1								
5	EBM	3B/C2								
4	EBM	3B/E2								
3	EBM	3B/C1								
2	EBM	3B/D5								
1	EBM	3B/F3								
COIL		3B/B6								

CONNECTOR

DESIG	LOC	CODE
(V) FO	4C8	910A

DIODE

DESIG	LOC	CODE
CO0	1B3	446F
CO1-4	2F6	446F
FO	4F8	446F

INDUCTOR

DESIG	LOC	CODE
L1	3B/F3	274L

PLUG IN UNIT

DESIG	LOC	CODE
(V) FO	4D8	ED-99541-( ) GROUP 1

RESISTOR

DESIG	LOC	CODE
FO	4D9	KS-14603 L1A,680
T	4C9	144A,866K

VARISTOR

DESIG	LOC	CODE
FO1	4D9	100E
FO2	4D9	100E

APP FIG. 3

RELAY

DESIG			BR1				CF				DOA		RS1				PMR		BC5S						DESIG
CODE			AF88				AJ15				AK4						AK4								CODE
OPTION																									OPTION
	CONT ARR	LOC	CONT ARR	LOC	CONT ARR	LOC	CONT ARR	LOC	CONT ARR	LOC	CONT ARR	LOC	CONT ARR	LOC	CONT ARR	LOC	CONT ARR	LOC	CONT ARR	LOC	CONT ARR	LOC	CONT ARR	LOC	
12			M	6F1			EBM	3B/H0					M	6D1					M	6E1					12
11			B	2B7			EBM						EBM						EBM						11
10			M	[illegible]			EBM	[illegible]					EBM	3A/G0					EBM	2E1					10
9			B	[illegible]			EBM	2E0					EMB						EMB	2F1					9
8			BM	2E9			EMB	6F2					EMB	3A/G0					EMB	6B1					8
7			B	2B5			EBM	6D2																	7
6			BM	3A/G0			EMB	1H6																	6
5			B	2B4			EMB	4E7			EMB	3B/H0					EMB								5
4			M	6F1			EBM	3B/D0			EMB	3B/D0					EMB								4
3			B	2B3			EBM				EBM	3B/D0					EBM	1G8							3
2			M	3A/G0			EBM	3B/D0			EBM	2E0					EBM								2
1			B	1F6			EBM				M	4H3					M	6G2							1
COIL				6D3				6G3				1H4		6A3				6F3		6H3					COIL

CAPACITOR

DESIG	LOC	CODE
P	4G3	437A

DIODE

DESIG	LOC	CODE
BC5	2C8	446F
BR1	6D1	446F
D8	1C3	446F
RT	4G5	446F
(N) RS1	6C1	446F

INDUCTOR

DESIG	LOC	CODE
L2	3A/G0	274L

RESISTOR

DESIG	LOC	CODE
DO	1G4	18U
MC	4G4	KS 13492 L1,200
P	4G4	18JU
T2R	3B/D0	144A,1500
T2T	3B/D0	144A,1500

DRAWING ISSUE

SUPER SEDES

DIAL CONFERENCE TRUNK CIRCUIT (2)

SD-66902-01-C2

BELL TELEPHONE LABORATORIES INCORPORATED

DWG SIZE 6S

PRINTED IN U.S.A.

SD-66902-01-C2

TCI Library www.telephonecollectors.info

CIRCUIT NOTES:

101.

DESIG	FUSE AMP	POTENTIAL	ONE PER	TERM. DESIG
T- *	1-1/3	-48V	APP FIG. 1	
T- *	1-1/3	GRD	APP FIG. 1	

* FUSING OF UNIVERSAL TRUNK CIRCUIT ASSIGNED AS ACCESS PORT OF THE CONFERENCE CIRCUIT , SEE NOTE 301 .

BATTERY SYMBOL	VOLTAGE RANGE
-48	45 - 52V

102.

FEATURE OR OPTION		PROVIDE APP FIG.	APP OR WRG	QUANTITY
CONFERENCE CIRCUIT		1,3	M	1 PER PBX
CORD SWITCHBOARD	REQ'D	2	R,N	1 PER PBX
	NOT REQ'D		W,Q	

103.

NETWORK VALUES		
NETWORK NO.	RESISTANCE IN OHMS	CAPACITANCE IN UF

104.

RECORD OF APP FIGURES , WIRING AND APPARATUS CHANGES							
CHANGED ON ISS	IF JOB RECORDS DO NOT SPECIFY	THIS OPTION WAS FURN	SEE NOTE	USE IN CIRCUIT STD	A & M	MD	
3D	Y,Z	Z	106	Y		Z	
3D	W	W	102,106	W			
3D	APP FIG 2	NONE	102 106	APP FIG 2			
5D	APP FIG 3 Q,R,M,V	V	102 107	APP FIG 3 Q,R,M		V	
5D	S,T	T		S		T	
5D	N	NONE	102	N			

105. THIS CONFERENCE CIRCUIT REQUIRES APPROPRIATE STRAPPING IN THE UNIVERSAL LINE AND DIAL PULSE REGISTER CIRCUITS FOR CLASS OF SERVICE OPTIONS , ETC . THE UNIVERSAL LINE STRAPPING IS ON TERMINAL STRIPS IN THE TIE TRUNK ADAPTER UNIT OF THE LINE,LINK AND MARKER CIRCUIT .

106. PROVIDE Y OPTION AND REMOVE Z OPTION IF APP FIG. 2 IS PROVIDED.

107. PROVIDE M OPTION AND REMOVE V OPTION IF APP FIG. 3 IS PROVIDED.

TRANSMISSION TEST REQUIREMENTS
(1000 CYCLE LOSS BETWEEN 600 OHM LINES)

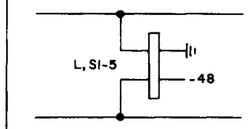

MAX ALLOWABLE CKT LOSS (DB)
0.2

ALLOWABLE INDIVIDUAL APPARATUS LOSSES (db)

APPARATUS	DESIG	CODE	MAX. LOSS	MIN. LOSS	REMARKS
RELAYS	L,S1-S5 L	AJ 52 AJ 138	0.2 0.2		
INDUCTORS	L1,L2	274L	0.1		

INFORMATION NOTES:

301. THE ASSIGNMENT OF TRUNK TERMINALS TO THE UNIVERSAL LINE CIRCUITS USED FOR THIS CONFERENCE CIRCUIT IS PER CUSTOMER SPECIFICATIONS AND NEED FOLLOW NO NUMERICAL ORDER , HOWEVER , WHEN TRUNK TERMINALS ARE NOT SPECIFIED , TERMINALS 84 THROUGH 89 USED CONSECUTIVELY SHALL BE GIVEN PREFERENCE,WITH TERMINAL 84 ASSIGNED AS THE ACCESS CODE FOR THE CONFERENCE CIRCUIT AND TERMINAL 89 AS THE DIAL BACK CODE FOR A CENTRAL OFFICE TRUNK CONNECTION .

302. CHARTS A-F ON SHEETS D2 & D3 SHOW THE CONTROL AND SWITCHING ACTIONS INVOLVED IN SETTING UP A CONFERENCE.

303. UNLESS OTHERWISE SPECIFIED:
RESISTANCE VALUES ARE IN OHMS,
CAPACITANCE VALUES ARE IN MICRO FARADS,
VALUES PRECEDED BY THE SYMBOL + (PLUS) OR - (MINUS) ARE IN VOLTS.

WORKING LIMITS

MAX EXTERNAL LOOP RESISTANCE	1500
MIN INSULATION RESISTANCE	16,000

DRAWING ISSUE		
1	JFF KFJ	HW
2D	SAK JFF KFJ	HW
3D	FJS RKU GFH	HW
4D	JJH SAK GFH	
5D	JJH SAK GFH	

PMJD

5

DIAL CONFERENCE TRUNK CIRCUIT

BELL TELEPHONE LABORATORIES INCORPORATED

DWG SIZE 6S

SD-66902-01-D1

PRINTED IN U.S.A.

TCI Library www.telephonecollectors.info

INFORMATION NOTES (CONT)
302. (CONT)

CHART A

ORIGINATING A CONFERENCE AND CALLING FIRST CONFEREE STATION

ORIGINATING STATION	PBX SWITCHING SYSTEM	CONFERENCE CONTROL CIRCUIT
GOES OFF-HOOK AND DIALS CONFERENCE NUMBER 80	NORMAL FUNCTIONS TO CONNECT STATION TO CONTROL	TERMINATES ORIGINATING STATION IN LINE RELAY (L)
	REGISTER ATTACHED	CALLS REGISTER TO VERTICAL
	DIAL TONE RETURNED	DIAL TONE ON VERTICAL 81
RECEIVES SECOND DIAL TONE	80	ROUTED TO VERTICAL 80
DIALS NUMBER OF FIRST CONFERENCE STATION	80	PULSES LINE RELAY (L)
	REGISTER RECEIVES DIAL PULSE	VIA VERTICALS 80 & 81
	MARKER CONNECTS CALLED STATION LINE TO CONTROL CIRCUIT VIA VERTICAL 81 (SEE CHART D FOR BUSY STATION)	TERMINATES CALLED STATION
ORIGINATOR HEARS RING BACK	80	RETURNS RING BACK TO VERTICAL 80
CALLED STATION		
BELL RINGS	81	RINGS CALLED LINE VIA VERTICAL 81 (SEE CHART E FOR DA)
GOES OFF HOOK	81	TRIPS RINGING CIRCUIT AND PREPARES OPERATION OF PRIVATE CONSULTATION CIRCUITS
ORIGINATOR AND CALLED STATION		
TALK VIA CONFERENCE AMPLIFIER	81 80	CONNECTS ORIGINATOR AND CALLED STATION VIA CONFERENCE AMPLIFIER

CHART B

ORIGINATOR CALLS SECOND CONFEREE STATION

ORIGINATING STATION	PBX SWITCHING SYSTEM	CONFERENCE CONTROL CIRCUIT
OPERATES AND RELEASES SWITCH HOOK	80	DISCONNECTS ORIGINATING STATION FROM CONFERENCE AMPLIFIER
	REGISTER ATTACHED	CALLS REGISTER TO VERTICAL 82
	DIAL TONE RETURNED	DIAL TONE ON VERTICAL 82
RECEIVES DIAL TONE	80	ROUTED TO VERTICAL 80
DIALS NUMBER OF SECOND CONFEREE	80	PULSES LINE RELAY (L)
	REGISTER RECEIVES DIAL PULSES	VIA VERTICAL 80 & 82
	MARKER CONNECTS CALLED STATION LINE TO CONTROL CIRCUIT VIA VERTICAL 82 (SEE CHART D FOR BUSY STATION)	TERMINATES CALLED STATION LINE IN RINGING CIRCUIT
ORIGINATOR HEARS RING BACK	80	RETURNS RING BACK TO ORIGINATOR AND OPERATES PRIVATE CONSULTATION CIRCUITS
CALLED STATION		
BELL RINGS	82	RINGS ON CALLED LINE (SEE CHART E FOR STATION DA)
GOES OFF HOOK	82	TRIPS RINGING CIRCUIT
ORIGINATOR AND CALLED STATION		
TALK VIA PRIVATE CONSULTATION PATH	80 82	CONNECTS ORIGINATOR AND SECOND CALLED STATION IN PRIVATE CONSULTATION VIA REPEAT COIL

NOTE: ALL FUTURE CONFEREES ADDED WILL HAVE PRIVATE CONSULTATION WITH THE ORIGINATOR (OR CONTROLLER) FOR THE DURATION OF THE CONFERENCE

CHART C

ORIGINATOR (OR CONTROLLER) AND CALLED PARTY JOIN CONFERENCE AFTER PRIVATE CONSULTATION

ORIGINATING STATION	PBX SWITCHING SYSTEM	CONFERENCE CONTROL CIRCUIT
ORIGINATOR (OR CONTROLLER) OPERATES AND RELEASES SWITCHHOOK		OPERATES CF RELAY AND RELATED CIRCUITS
ORIGINATOR AND ALL CALLED STATIONS		BREAKS PRIVATE CONSULTATION PATH AND CONNECTS ORIGINATOR AND CALLED STATION TO CONFERENCE AMPLIFIER
		RE-SETS PRIVATE CONSULTATION CIRCUITS TO NORMAL FOR NEXT OPERATION
TALK VIA CONFERENCE AMPLIFIER	80 81 82	

NOTE: THIRD TO FIFTH CONFEREES ARE ADDED IN THE SAME MANNER EXCEPT VERTICALS 83 THROUGH 85 ARE USED

SD-66902-01-D2

DRAWING ISSUE 5D PJS RK/GFH

5

DIAL CONFERENCE TRUNK CIRCUIT (2)

SD-66902-01-D2

BELL TELEPHONE LABORATORIES INCORPORATED

DWG SIZE 6S

PRINTED IN U.S.A.

TCI Library www.telephonecollectors.info

INFORMATION NOTES (CONT)
302. (CONT)

CHART D

CALLED STATION IS BUSY

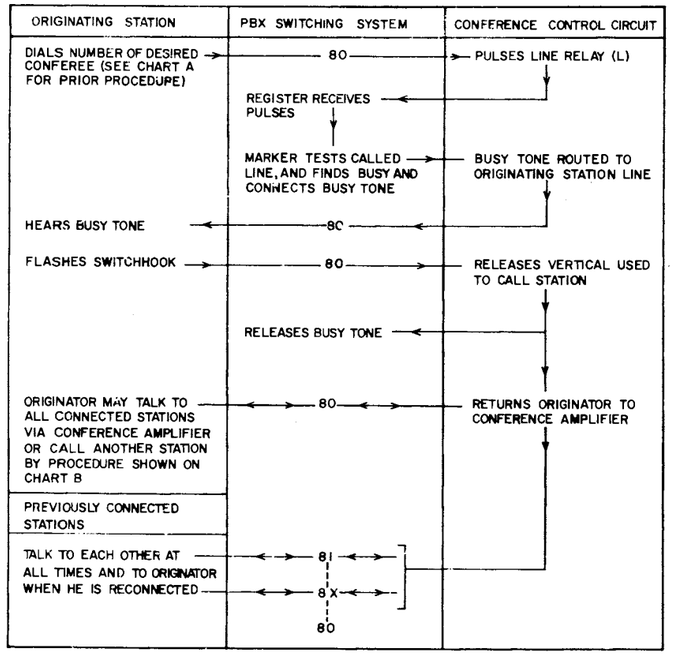

CHART E

CALLED STATION DOES NOT ANSWER

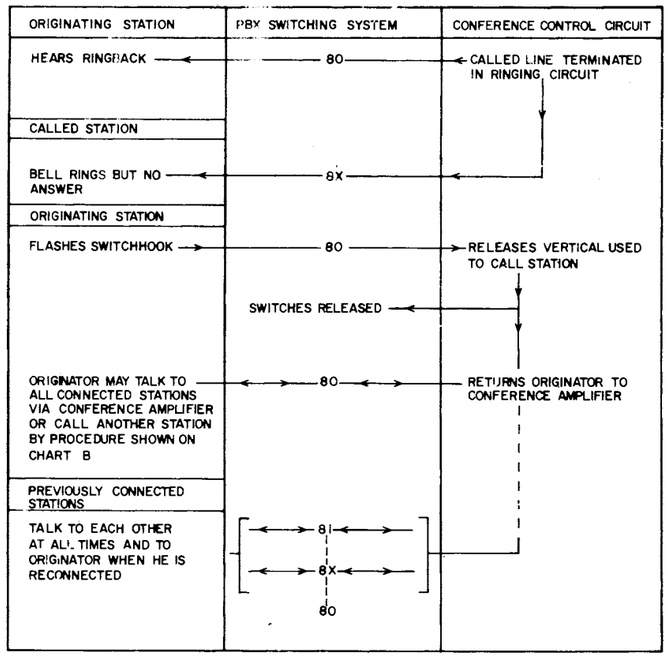

CHART F

TRANSFER OF CONTROL

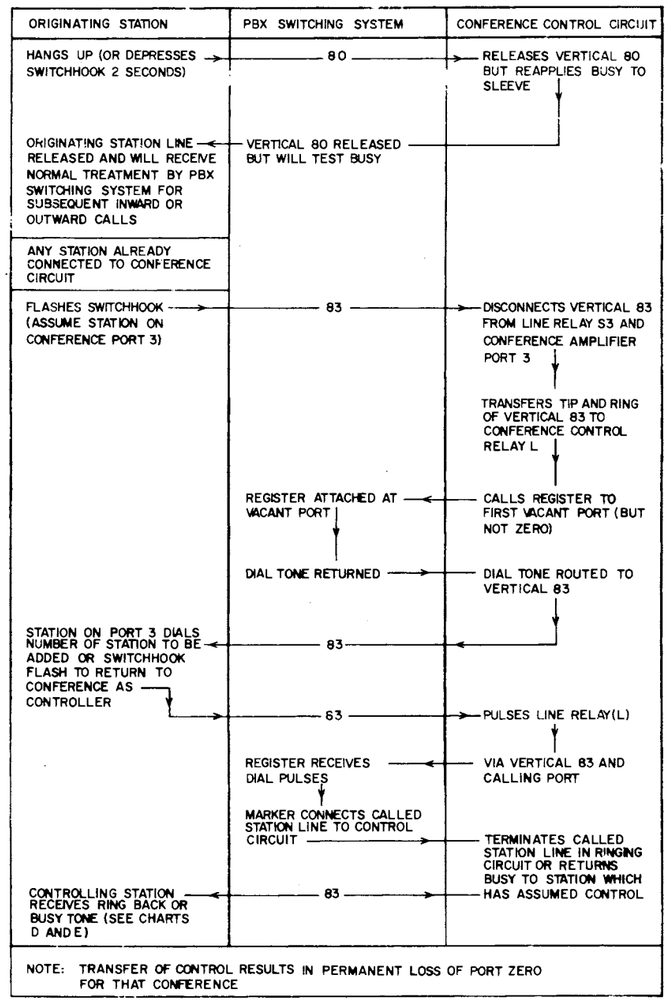

NOTE: TRANSFER OF CONTROL RESULTS IN PERMANENT LOSS OF PORT ZERO FOR THAT CONFERENCE

DRAWING ISSUE
5D PJS RKW GFH HW

5

DIAL CONFERENCE TRUNK CIRCUIT (2)

SD-66902-01-D3

BELL TELEPHONE LABORATORIES INCORPORATED

DATE LINE 6S

TCI Library www.telephonecollectors.info

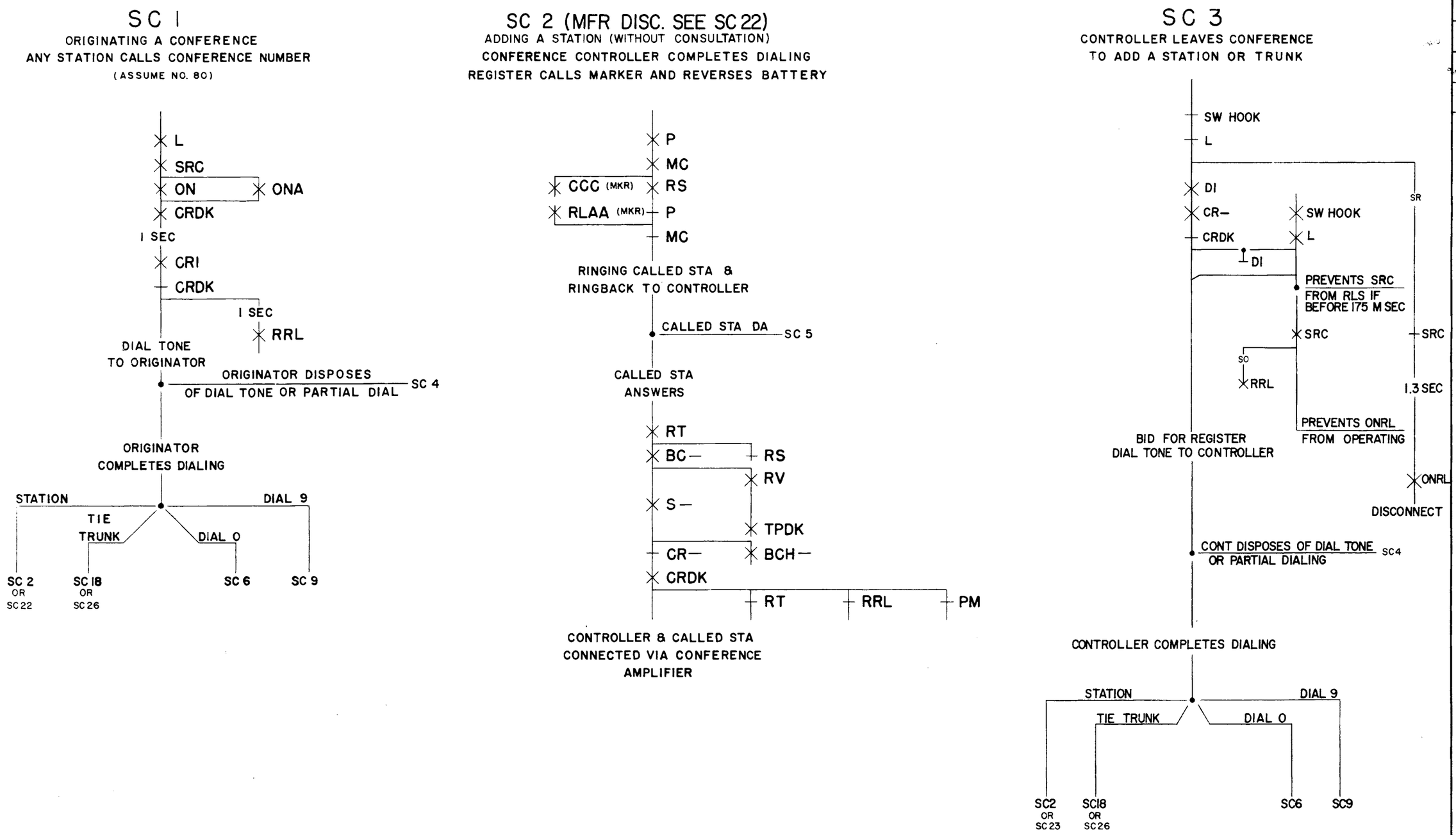

DRAWING ISSUE

1	KFJ
2D	JFF KFJ
3D	PJS GFH
5D	JJH SAK GFH

5

DIAL CONFERENCE
TRUNK CIRCUIT

2

SD-66902-01-E1

BELL TELEPHONE LABORATORIES
INCORPORATED

6S

PRINTED IN U.S.A.

SD-66902-01-E1

TCI Library www.telephonecollectors.info

SC 4

CONTROLLER RETURNS TO CONFERENCE
AFTER DIAL TONE OR PARTIAL DIALING

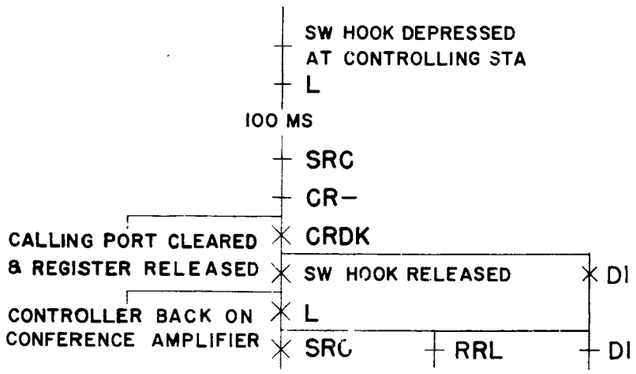

SC 5

CONTROLLER RETURNS TO CONFERENCE
WHEN CALLED STATION OTHER THAN DIAL-REPEATING TIE - TRUNK STATION IS BUSY OR DA
(FOR DIAL-REPEATING TIE-TRUNK SEE SC 27)

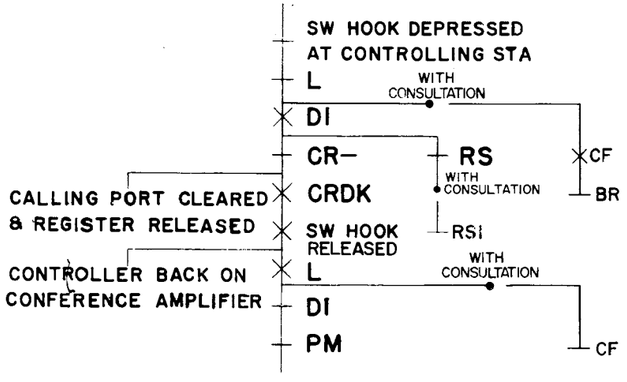

SC 6 (MFR DISC)

CONTROLLER AND CONSOLE ATTENDANT ADD CO TRUNK PARTY TO CONFERENCE;
CKT NOT EQUIPPED FOR CONSULTATION
CONTROLLER HAS DIALED 0

REGISTER REVERSES BATTERY AND CALLS MARKER
(FOR CKT EQUIPPED FOR CONSULTION SEE SC 28)

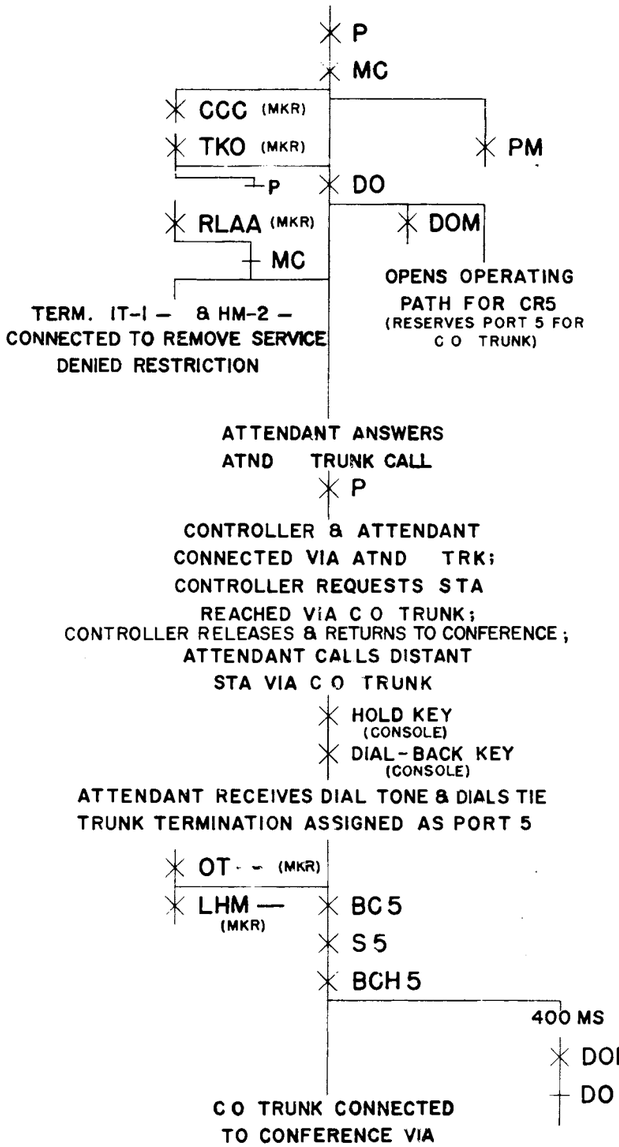

SC 7 (MFR DISC)

CONTROLLER RELEASES FROM ATTENDANT
TRUNK WITH PORTS 1-4 IN USE AND PORT 5
RESERVED FOR C O TRUNK CONNECTION

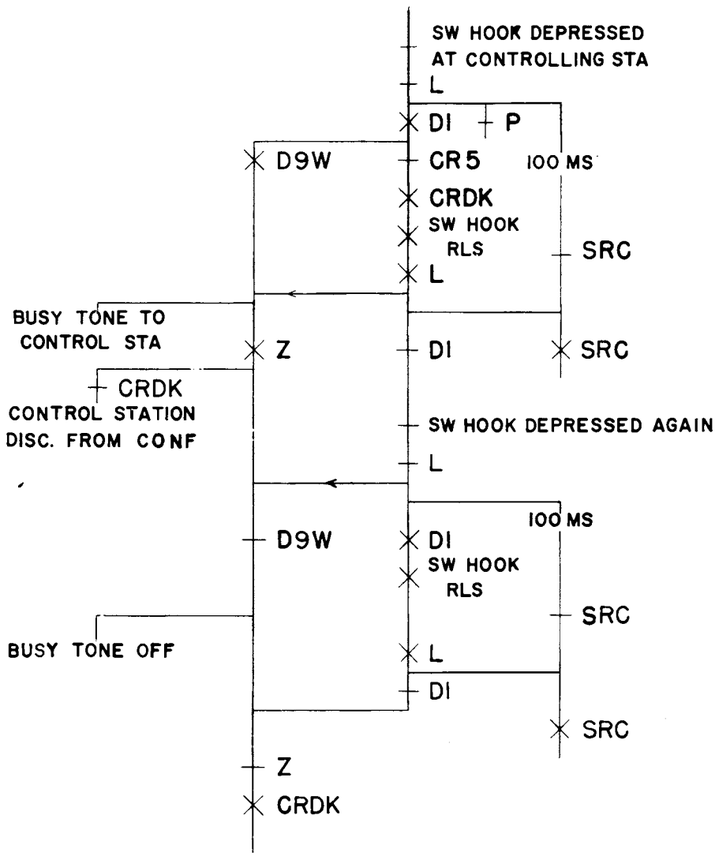

DIAL CONFERENCE TRUNK CIRCUIT
BELL TELEPHONE LABORATORIES INCORPORATED
SD-66902-01-E2

TCI Library www.telephonecollectors.info

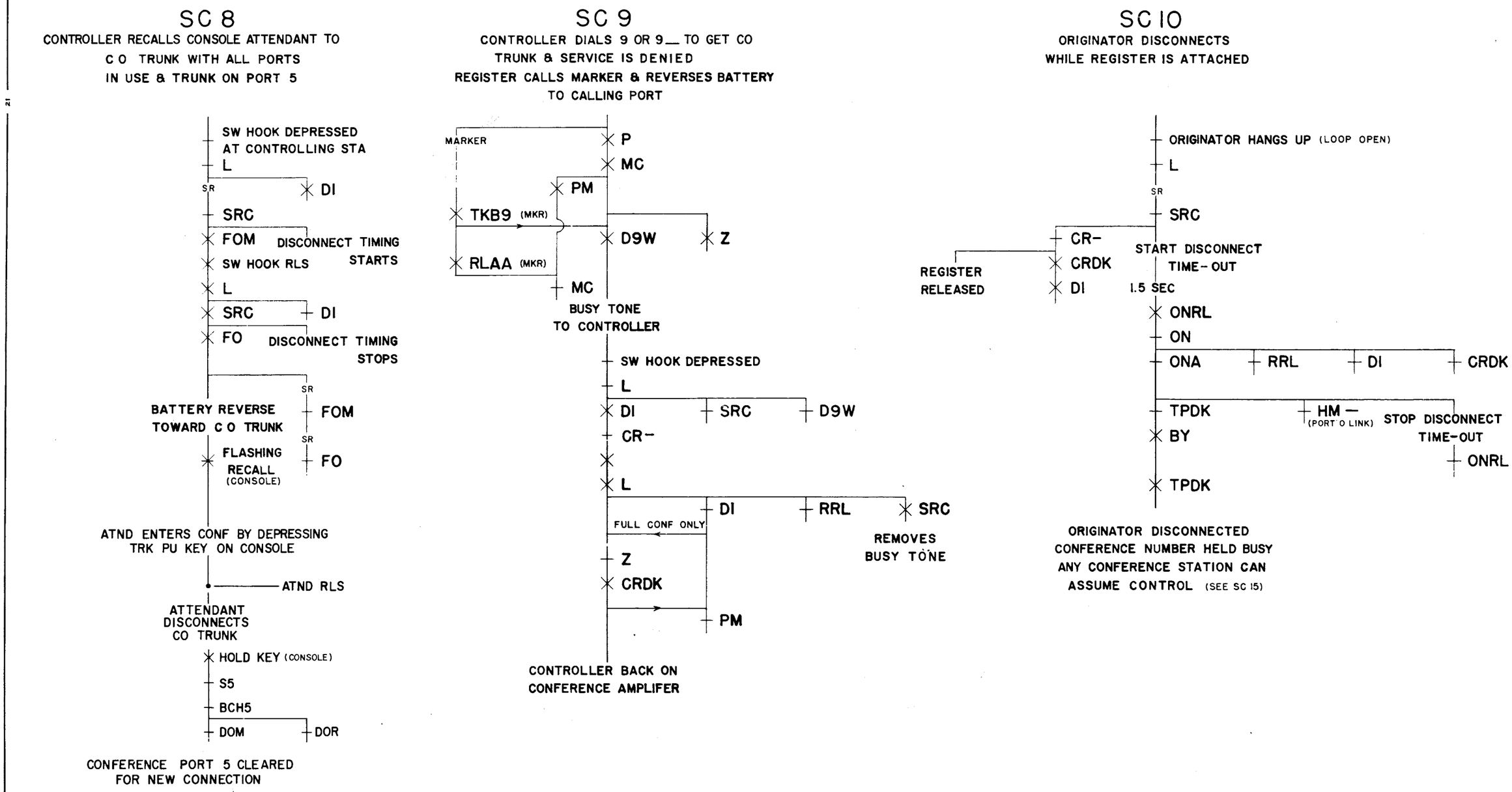

DRAWING ISSUE

1	KFJ
2D	WPA JFF KFJ
3D	PJS RKU GFH
5D	JJH SAK GFH

5

DIAL CONFERENCE
TRUNK CIRCUIT (2)

SD-66902-01-E3

BELL TELEPHONE LABORATORIES INCORPORATED

6S

PRINTED IN U.S.A.

SD-66902-01-E3

TCI Library www.telephonecollectors.info

SC 11

ORIGINATOR DISCONNECTS
WHILE ON CONFERENCE AMPLIFIER

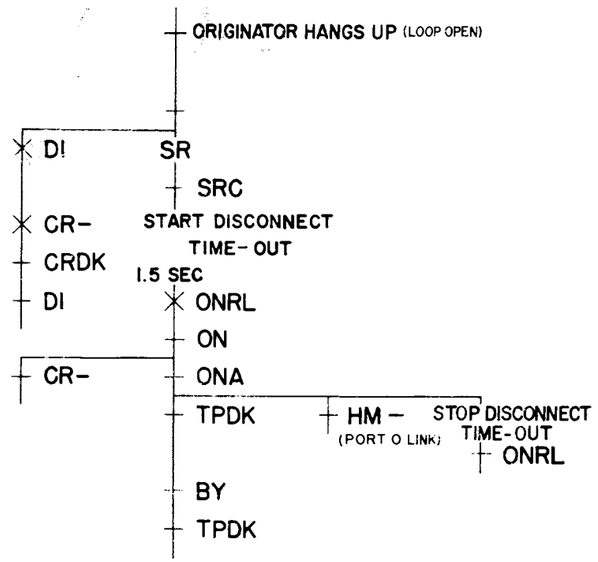

ORIGINATOR DISCONNECTED ;
CONFERENCE NUMBER HELD BUSY;
ANY CONFERENCE STATION CAN
ASSUME CONTROL (SEE SC 15)

SC 12

ADDED STATION DISCONNECTS
WITH ORIGINATOR IN CONTROL ;
THREE OR MORE STATIONS IN CONF

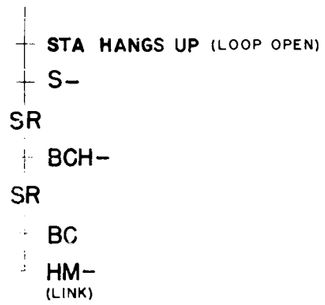

SC 13

ADDED STATION NOT IN CONTROL
DISCONNECTS WITH ORIGINATOR
DISCONNECTED ; THREE OR MORE
STATIONS IN CONFERENCE

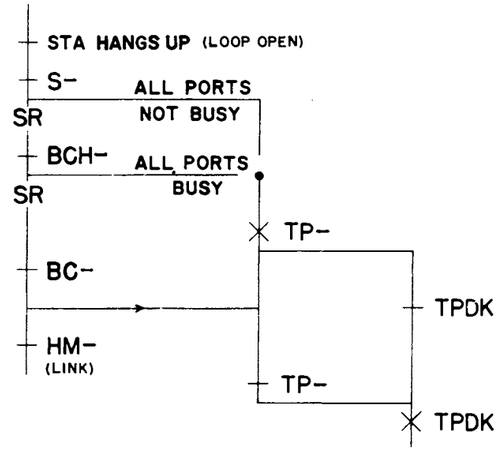

SC 14

NEXT TO LAST STATION DISCONNECTS
WITH ORIGINATOR DISCONNECTED ;
ASSUME SW VERT 82 & 83 IN USE

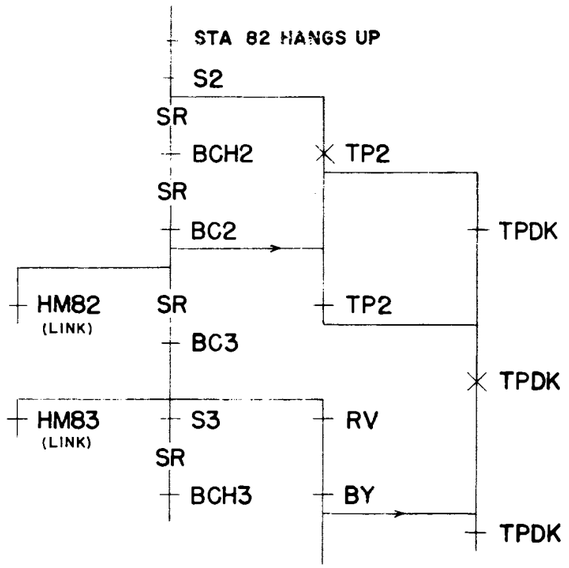

CONFERENCE CONTROL NUMBER
FREE FOR NEXT CALL

SC 15

STATION ON PORT 3 ASSUMES CONTROL
AFTER ORIGINATOR DISCONNECTS

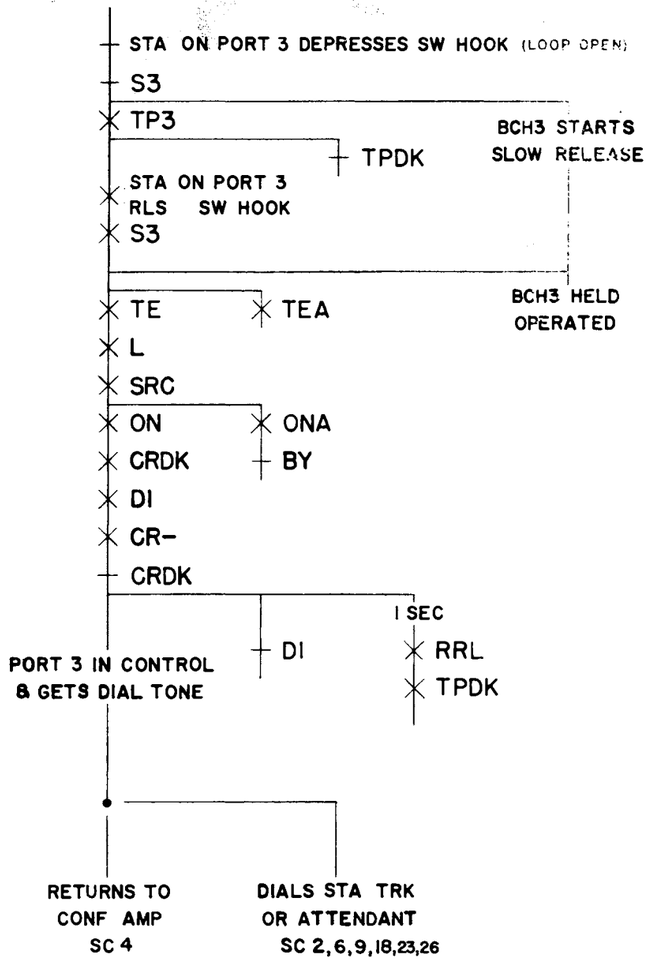

DRAWING ISSUE 1

51

DIAL CONFERENCE TRUNK CIRCUIT

BELL TELEPHONE LABORATORIES INCORPORATED

SIZE 6S

SD-66902-01-E4

PRINTED IN U.S.A.

TCI Library - www.telephonecollectors.info

SC 16

STATION 3 DISCONNECTS AFTER
TAKING CONTROL ASSUME STA
ON CONF AMP & SOME PORTS NOT USED

STA ON PORT 3 HANGS UP
L
SR
SRC
START DISCONNECT
TIME-OUT
1.5 SEC
ONRL
DI
CR-
CRDK
DI
ON
ONA
CR-
TE
TEA
TPDK
TP3
BY
TPDK
S3
RECYCLE DISCONNECT
TIMING
ONRL
TP3
SR
TPDK
BCH3
SR
BC3
TP3
TPDK

SC 17

CONTROLLER IN CONFERENCE FLASHES SWITCH HOOK
WITH ALL PORTS BUSY

CONTROL STA DEPRESSES SW HOOK (LOOP OPEN)
L
DI
SR
SRC
D9W
CONTROL STA
RLS SW HOOK
L
DI
SRC
Z
FOM
FO
SR REV BAT. ON PORT 5
(CALLS ATTENDANT
TO C O TRUNK IF CONN)
CRDK
FOM
SR
FO
NORM BAT. ON PORT 5
CONTROLLER OFF CONF AMP
& RECEIVING BUSY TONE
(ALL PORTS BUSY INDICATION)
DEPRESSES SW HOOK
L
SR
D9W
SRC
RLS SW HOOK
BUSY TONE
REMOVED
L
FOM
SRC
Z
FO
SR REV BAT. ON PORT 5
CRDK
FOM
SR
FO
NORM BAT. ON PORT 5
CONTROLLER BACK ON
CONFERENCE AMPLIFIER

SC 18 (MFR DISC. SEE SC 26)

CONTROLLER ADDS DIAL REPEATING TIE TRUNK
REGISTER ATTACHED
(WITHOUT CONSULTATION)

L CONTROLLER DIALS TIE TRUNK TERMINATION
REGISTER REVERSES BATTERY
& CALLS MARKER
MARKER ATT
P
MC
CCC
(MKR)
PM
TKB8 (MKR)
D8
P (RELEASES WHEN MARKER & REGISTER
FUNCTIONS ARE COMPLETED)
RLAA (MKR)
MC
CONTROL STA CONNECTED TO TIE
TRUNK VIA A CONFERENCE PORT
CONTROLLER DIALS NO
OF DISTANT PBX STATION
DISTANT STA BUSY OR DA
RINGBACK OR BUSY
TONE TO CONTROLLER
DISTANT STA ANSWERS
TIE TRUNK REVERSES BAT.
P
RT
D8
BC-
S-
CR-
BCH-
CRDK
RT
PM
RRL
CONTROL STA & TIE TRUNK
STA ON CONF AMP

DRAWING ISSUE
1 KFJ
2D WPA JFF KFJ
5D JJH SAK GFH

5

DIAL CONFERENCE
TRUNK CIRCUIT (2)
SD-66902-01-E5
BELL TELEPHONE LABORATORIES
INCORPORATED
6S

SD-66902-01-E5

TCI Library www.telephonecollectors.info

SC 19 (MFR DISC SEE SC 30)

CONNECTING PARTY INTO CONFERENCE THRU CORD SWITCHBOARD WITHOUT CONSULTATION; PREVIOUS ACTION SHOWN IN FIRST HALF OF SC 6

ATTENDANT CALLS PARTY VIA CORD PLUGGED INTO ATTENDANT TRUNK JACK

ATTENDANT REMOVES BACK CORD FROM ATTENDANT TRUNK JACK AND PLUGS IT INTO JACK APPEARANCE OF PORT 5

CO

S5

BCH5

BC5

REMOVES VACANT PORT LOAD FROM PORT 5

GROUNDS SLEEVE OF SWITCHBOARD JACK

CONNECTS TIP AND RING THRU TO PORT 5

SC 20

CONTROLLER RECALLS ATTENDANT WITH ALL PORTS IN USE AND PORT 5 CONNECTED THRU CORD SWITCHBOARD

SW HK DEPRESSED AT CONTROLLING STA

L

DI

SR

SRC

FOM

DISCONNECT TIMING STARTS

SW HOOK RLS

L

SRC

DI

DISCONNECT TIMING STOPS

FO

F O TIMING STARTS

SWBD LOOP OPENED

750 MILLISECONDS

SR

FOM

FO

SWBD LOOP RESTORED

FLASHING RECALL (SWBD)

ATTENDANT RE-ENTERS CONFERENCE BY DEPRESSING SWBD CORD KEY

SC 21

NEXT TO LAST STATION DISCONNECTS WITH ORIGINATOR DISCONNECTED AND LAST STATION CONNECTED TO PORT 5 THRU CORD SWITCHBOARD ASSUME SW VERT 82 & 85 IN USE

STATION 82 HANGS UP

S2

CO

SR

HM 85

TP2

SR

BACK CORD LAMP LIGHTS (SWBD)

S5

BCH 2

SR

TP5

SR

BC2

BCH 5

TPDK

HM82

DOM

RV

SR

BC5

TP2

BY

TP5

CONF CKT AVAILABLE FOR NEXT CONF

DRAWING ISSUE		
3D	PJS RKW GFH	HW
5D	JJH SAK GFH	

5

DIAL CONFERENCE TRUNK CIRCUIT (2)

SD-66902-01-E6

BELL TELEPHONE LABORATORIES INCORPORATED

6S

PRINTED IN U.S.A.

TCI Library www.telephonecollectors.info

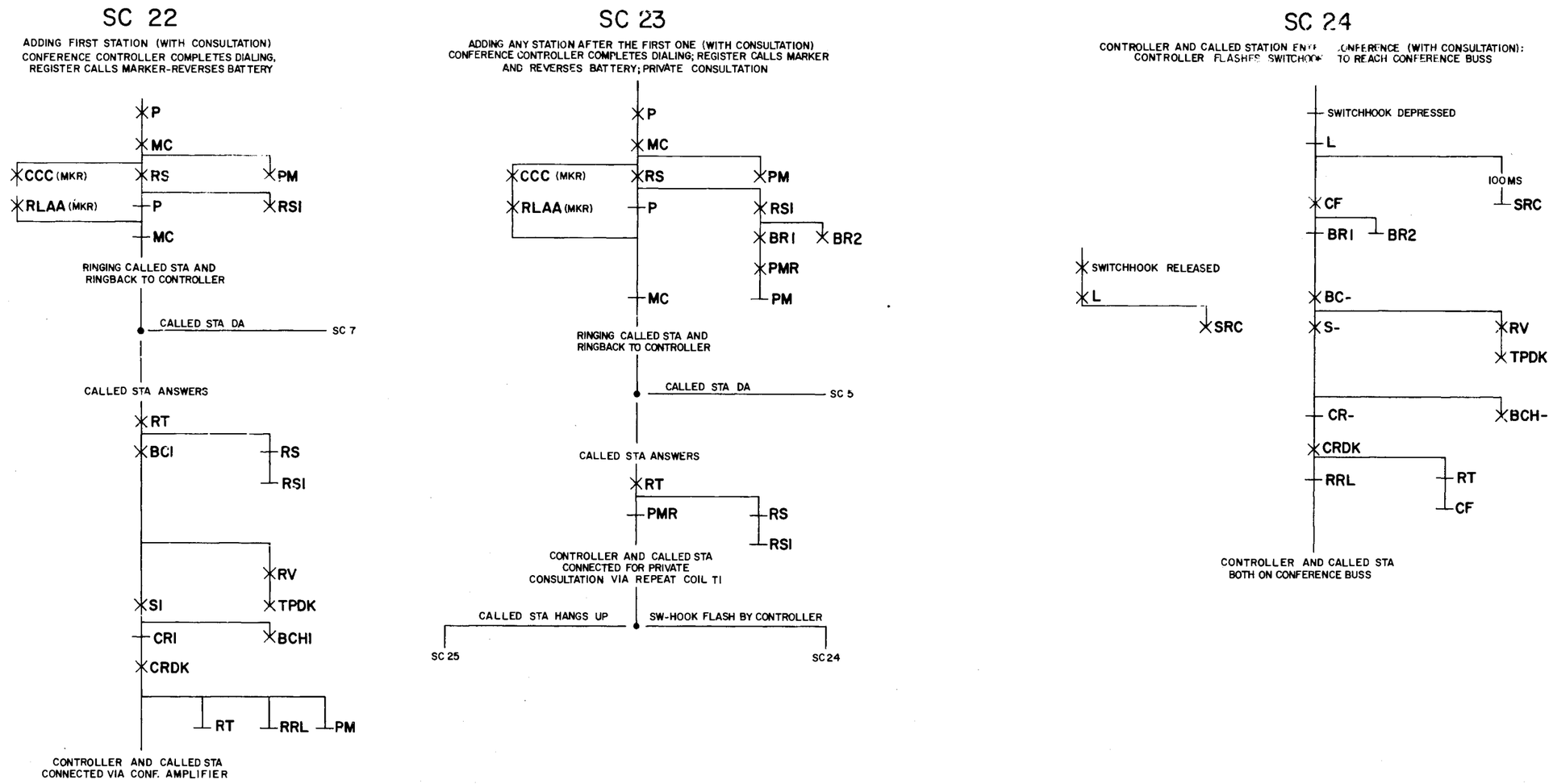

DRAWING ISSUE

5D	JJH SAK GFH

5

DIAL CONFERENCE TRUNK CIRCUIT (2)

SD-66902-01-E7

BELL TELEPHONE LABORATORIES INCORPORATED

DWG SIZE 6S

PRINTED IN U.S.A.

SD-66902-01-E7

TCI Library www.telephonecollectors.info

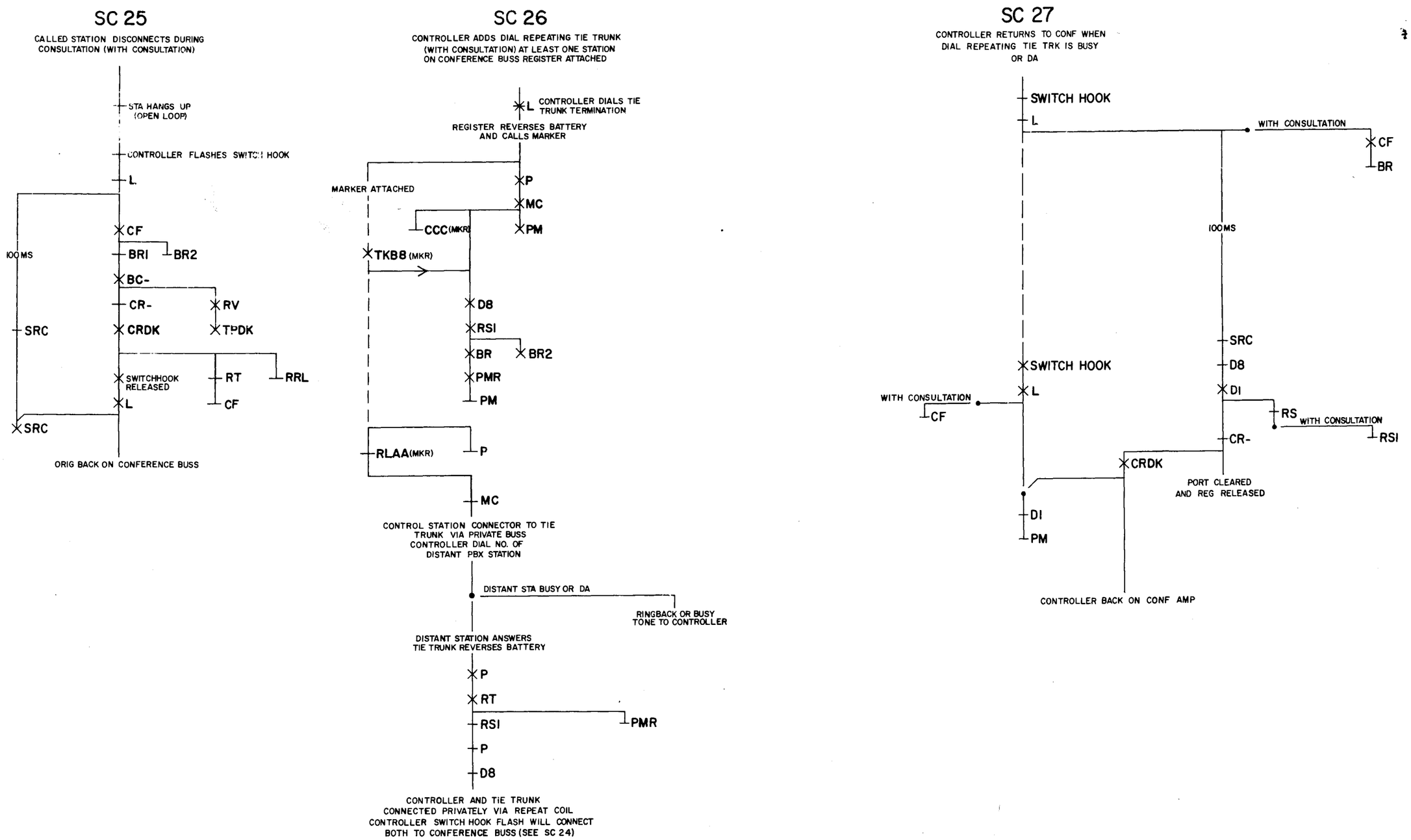

DRAWING ISSUE 5D JJH SAK GFH

5

DIAL CONFERENCE TRUNK CIRCUIT (2)

SD-66902-01-E8

BELL TELEPHONE LABORATORIES INCORPORATED

DWG SIZE 6S

PRINTED IN U.S.A.

TCI Library www.telephonecollectors.info

SC 28

CONTROLLER CALLS ATND TO ADD CO PARTY

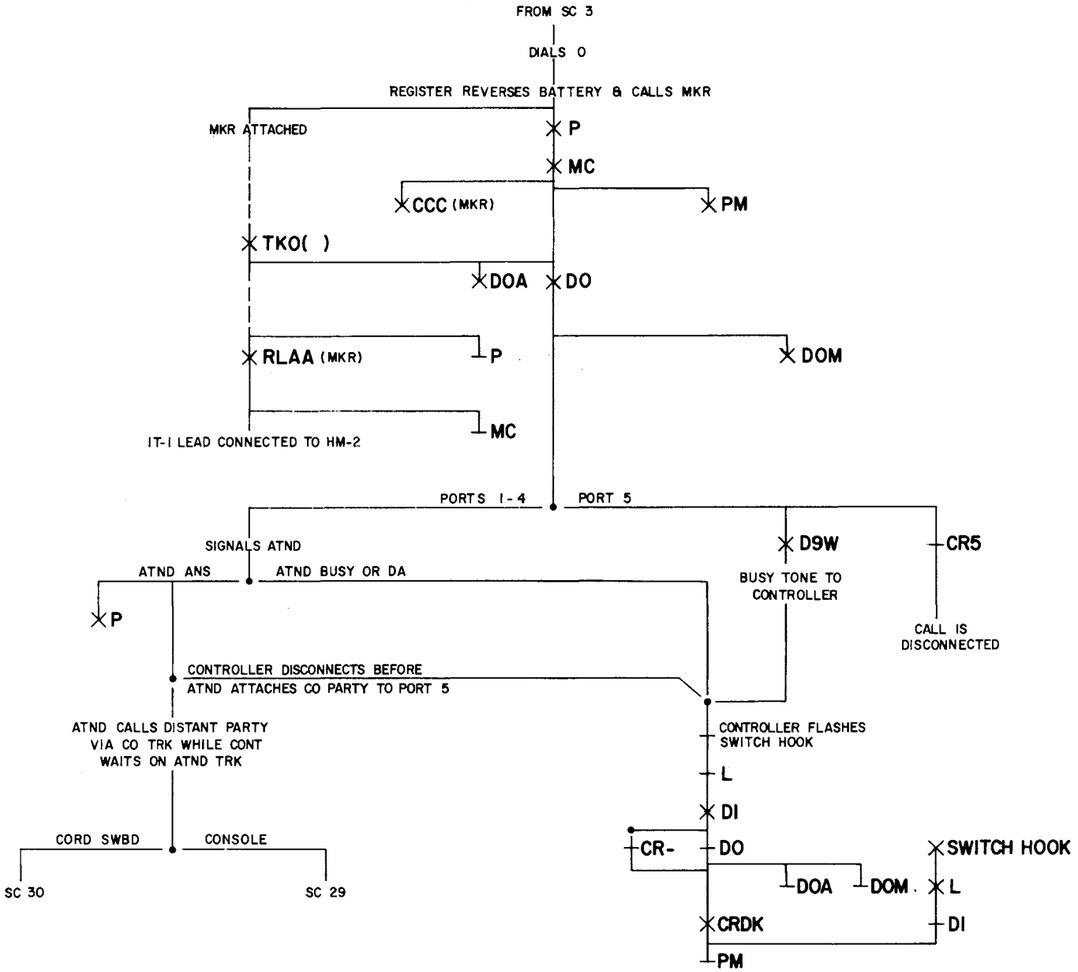

SC 29

CONSOLE ATND DIALS IN CO PARTY

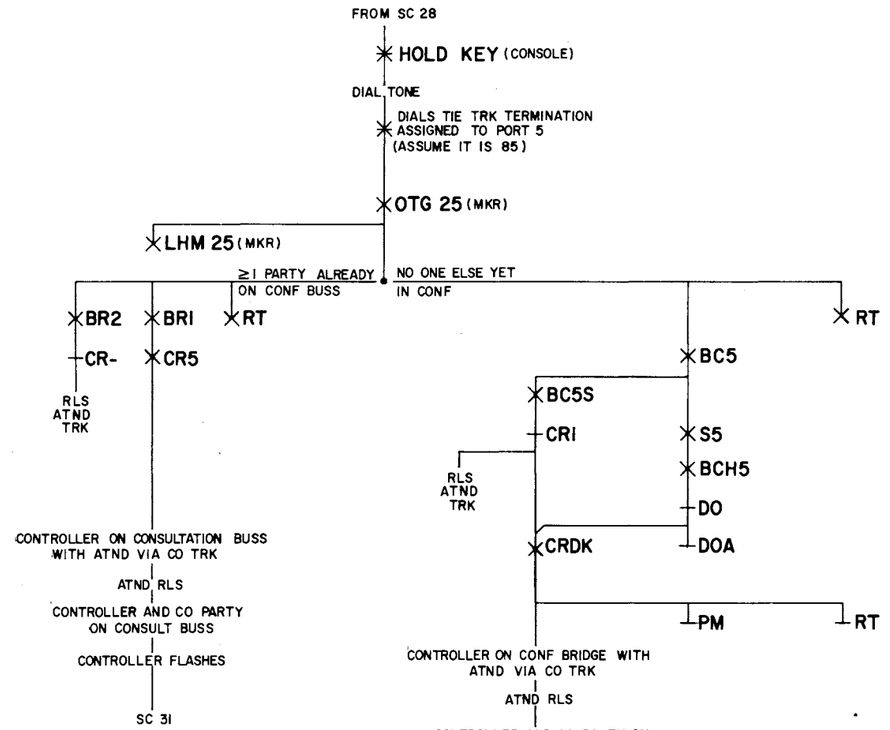

SD-66902-01-E9

5

DIAL CONFERENCE TRUNK CIRCUIT (2)

SD-66902-01-E9

BELL TELEPHONE LABORATORIES INCORPORATED

SIZE 6S

TCI Library www.telephonecollectors.info

SC 30

CORD SWBD ATND PLUGS CO PARTY INTO PORT 5

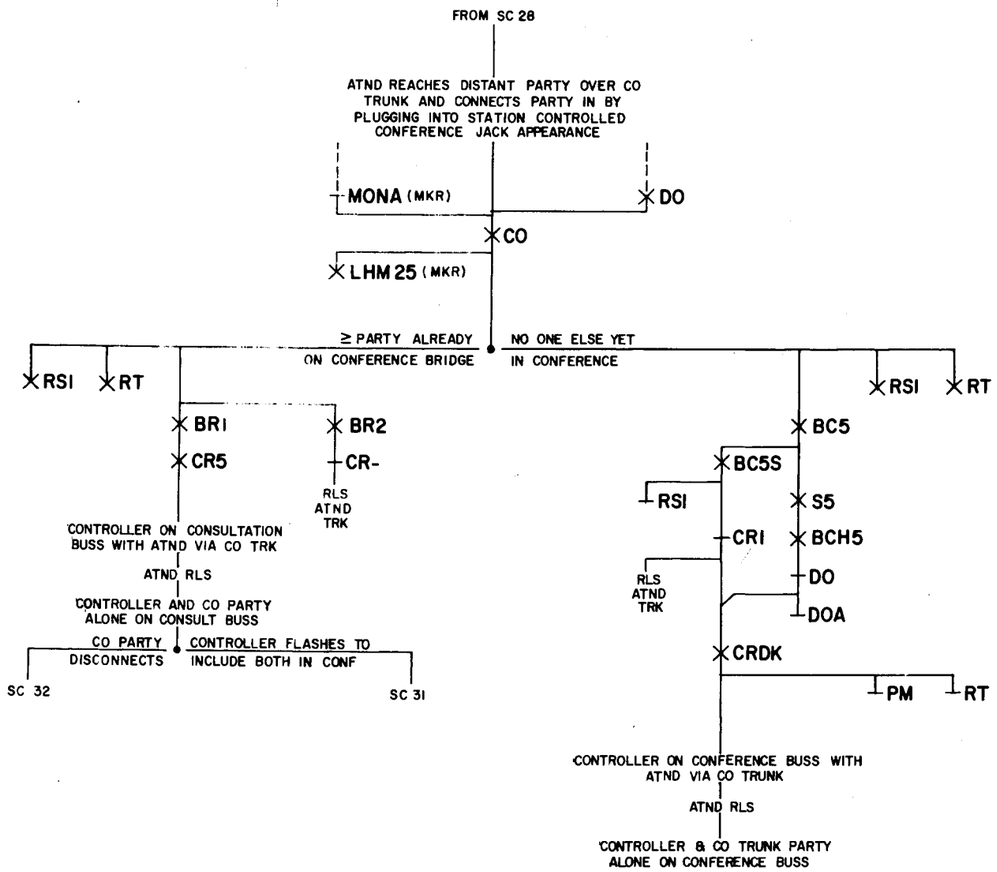

SC 31

CONTROLLER FLASHES TO INCLUDE BOTH CONTROLLER AND CO PARTY IN CONFERENCE

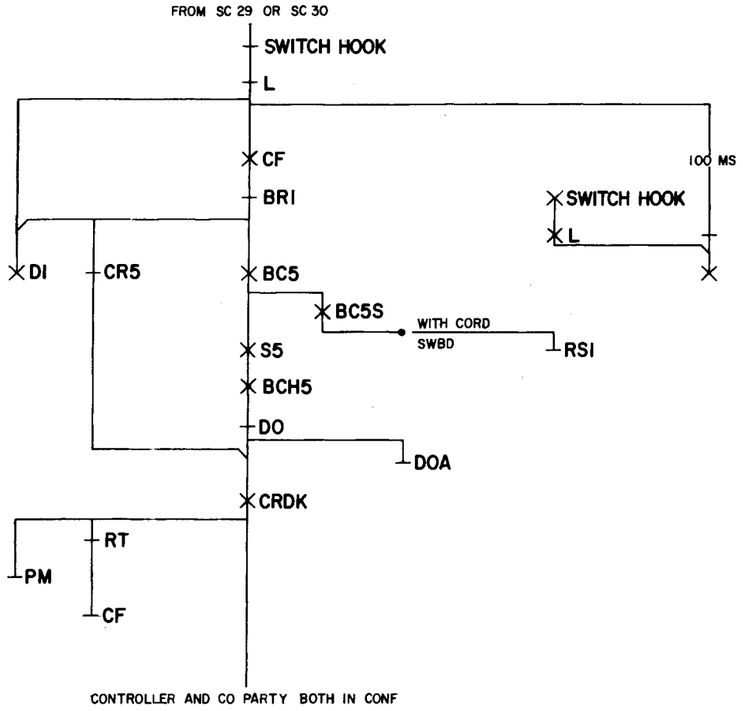

DRAWING ISSUE 5 JJH SAK GFH

HW

5

DIAL CONFERENCE TRUNK CIRCUIT

SD-66902-01-E10

BELL TELEPHONE LABORATORIES INCORPORATED

SIZE 6S

PRINTED IN U.S.A.

TCI Library www.telephonecollectors.info

SC 32

CO PARTY CONNECTED THRU CORD SWBD
DISCONNECTS WHILE ON CONSULT BUSS

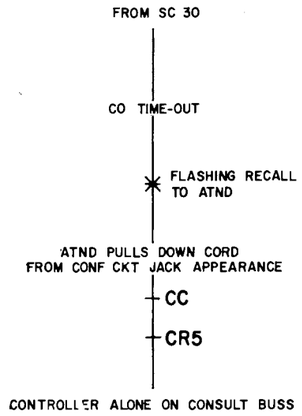

SC 33

CO PARTY CONNECTED THRU CORD SWBD
DISCONNECTS WHILE ON CONFERENCE

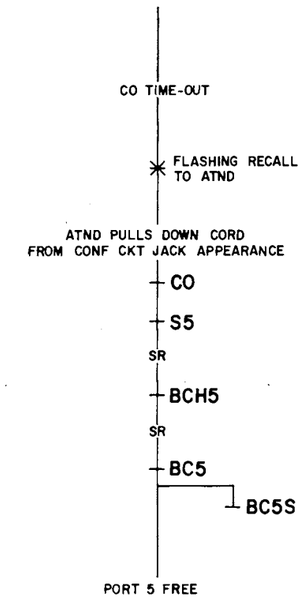

SC 34

ORIGINATOR DISCONNECTS WHILE ON
CONSULT BUSS WITH ANOTHER STATION

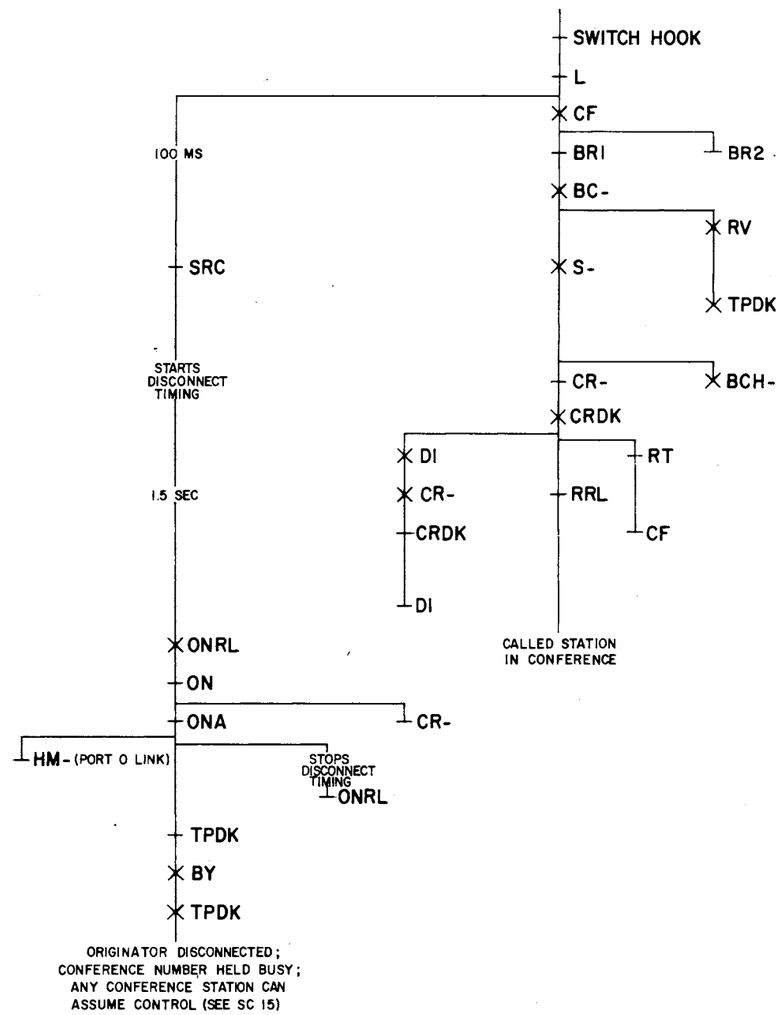

DRAWING ISSUE
3 UJH SAK GFH

5

DIAL CONFERENCE
TRUNK CIRCUIT
(2)

SD-66902-01-E11

BELL TELEPHONE LABORATORIES
INCORPORATED
SIZE 6S

PRINTED IN U.S.A.

SD-66902-01-E11

TCJ Library www.telephonecollectors.info

SD-66902-01 2 PAGES

CIRCUIT REQUIREMENTS

NO. 756 DIAL CONFERENCE TRUNK CIRCUIT

DRAWING ISSUE: SUPERSEDES ISS 4D — 5D — JJH SAK GFH

APPARATUS DESIG	CODE	OPT.	FIG.		MECH REQT BSP FIG.	CONT PRES	ARM. TRVL.	CIRCUIT PREPARATION BLOCK OR INSULATE	TEST CLIP DATA CONN BAT.	CONN GRD	TEST SET PREP	SEE TEST NOTE	DIRECT CURRENT FLOW REQT TEST WDG	TEST FOR	AFTER SOAK MA	TEST MA	READJ MA	REMARKS
RELAYS																		
BC1-4	AG20		1		262B					U(BC1-4)	G			0	20	10.7	10.2	
								(RV)NO						H	20	2.0	1.9	
														R	20	1.0	1.1	
BC5	AG20		1		262B					U(BC5)	G			0	20	11.2	10.2	
								11(BC5)						H	20	2.1	1.9	
														R	20	1.0	1.1	
BC5S	1/2AK4				202					1U(BC5S)	G			0		11.9	11.3	MOUNTED WITH PMR
BCH1-5	AG24		1		18B					U(BCH1-5)	G			0	36	13.7	13	BLK FOR BCH5 ONLY
								(RV)NO		U(BCH1-5)	G			H	36	1.6	1.5	
										U(BCH1-5)	G			R	36	0.7	1.0	
BR1	AF88	3	3					(CF)O		U(BR)	G			0	.	44.5	42.5	
BR2	1/2AK4	M		1	202					1L(BR2)	G			0		62.5	59.5	MOUNTED WITH ONRL
BY	1/2AK4			1	202			1,4(BY)		1L(BY)	G			0		12.4	11.3	MOUNTED WITH ONA
CF	AJ15	3	3		249					1L(CF)	G			0		42.5	40.5	
CO	AJ5	2	2		220				1L(CO)	1U(CO)				0		13.2	12.6	
CR1	1/2AK4		1		202					1L(CR1)	G			0		11.9	11.3	MOUNTED WITH CR2
CR2	1/2AK4		1		202					1U(CR2)	G			0		11.9	11.3	MOUNTED WITH CR1
CR3	1/2AK4		1		202					1L(CR3)	G			0		11.9	11.3	MOUNTED WITH CR4
CR4	1/2AK4		1		202					1U(CR4)	G			0		11.9	11.3	MOUNTED WITH CR3
CR5	1/2AK4		1		202			3(CR5)		1L(CR5)	G			0		12.4	11.3	MOUNTED WITH CRDK
CRDK	1/2AK4		1		202					1U(CRDK)	G			0		11.9	11.3	MOUNTED WITH CR5
DO	AJ15	Y	1		249					1U(DO)	G			0		59	56.5	
DO	AF98	Z	1		245			(DOM)NO		U(DO)	G			0		14.8	14.1	
DOA	1/2AK4	3	3		202					1U(DO)	G			0		56	53	
DOM	1/2AK8		1		204					1U(DOM)	G			0		9.1	8.7	MOUNTED WITH Z
										1U(DOM)	G			R		1.7	1.8	
DOR	1/2AK4	Y	1		202					1L(DOR)	G			0		11.9	11.3	MOUNTED WITH ONRL
D1	1/2AK30		1		202					1L(D1)	G			0		23	22	MOUNTED WITH D9W
D8	1/2AK4		1		202					1U(D8)	G			0		11.9	11.3	MOUNTED WITH TPDK
D9W	1/2AK30		1		202					1U(D9W)	G			0		23	22	MOUNTED WITH D1
FO	AG44		1		281B					1U(FO)	G		P	0	46	23.6	21.5	REQT APPLY WITH SEC
								3,5(FO)		1U(FO)	G		P	H	46	4.2	3.3	WINDING SHORT
										1U(FO)	G		P	R	46	2.2	2.4	CIRCUITED
										1U(FO)	G		S	0		7.1	65	
FOM	1/2AK37		1		201					1L(FOM)	G	2		0	35	23	22	MOUNTED WITH RRL
										1L(FOM)	G	2		H	35	2.6	2.5	
L	AJ52	V	1		303			(SRC)NO	1L(L)	2U(L)	M		P/S	0		13.2	12.6	
	AJ138	M	1		56B				1L(L)	2U(L)	M		P/S	R		3.1	3.3	
MC	AJ15		1		249			2(MC) (PM)NO		U(MC)	G			0		42.5	40.5	

PAGE 1

DIAL CONFERENCE TRUNK CIRCUIT		SD-66902-01-FI
BELL TELEPHONE LABORATORIES INCORPORATED		PRINTED IN U. S. A.

CIRCUIT REQUIREMENTS

DRAWING ISSUE: SUPERSEDES ISS 4D — 5D — JJH SAK GFH

APPARATUS DESIG	CODE	OPT.	FIG.		MECH REQT BSP FIG.	CONT PRES	ARM. TRVL.	CIRCUIT PREPARATION BLOCK OR INSULATE	TEST CLIP DATA CONN BAT.	CONN GRD	TEST SET PREP	SEE TEST NOTE	DIRECT CURRENT FLOW REQT TEST WDG	TEST FOR	AFTER SOAK MA	TEST MA	READ MA	REMARKS
ON	AF83		1		8			(ONA) (BY) NO (CRDK) (ONRL) O		U(ON)	G			0		8.1	7.9	
ONA	1/2AK4		1		202			9,12(ONA)		1U(ONA)	G			C		12.4	11.3	MOUNTED WITH ONT
ONRL	1/2AK4		1		202					1U(ONRL)	G	1		0		11.9	11.3	MOUNTED WITH DOR
P	1/2AK30		1		202			(MC)NO	1L(P)	2L(P)	B/G			0		23	22	MOUNTED WITH RS
PM	1/2AK4		1		202					1U(PM)	G			0		11.9	11.3	MOUNTED WITH RV
PMR	1/2AK4	3	3		202					1L(PMR)	G			0		11.9	11.3	MOUNTED WITH BC5S
RRL	1/2AK37		1		201					1U(RRL)	G			0		14.1	13.5	MOUNTED WITH FOM
RS	1/2AK30		1		202					1U(RS)	G			0		23	22	MOUNTED WITH P
RSI	1/2AK4	3	3		202					1U(RSI)	G			0		11.9	11.3	MOUNTED WITH DOA
RT	AJ58		1		308					1U(RT)	G		P	0		28	26.5	EM CONTACTS ONLY
																		NEED MAKE
										1U(RT)	G		P	0		29.5	28	
										1U(RT)	G		P	NO		20	21.5	
										2U(RT)	G		S	0		19	18	
RV	1/2AK4		1		202			(L)NO (BY)NO		1L(RV)	G			0		11.9	11.3	MOUNTED WITH PM
S1-5	AJ52		1		303			(BCH1-5)NO	1L(S1-5)	2U(S1-5)	M		P/S	0		13.2	12.6	BLK ONLY NUMERICAL
									1L(S1-5)	2U(S1-5)	M		P/S	R		3.1	3.3	EQUIVALENT OF RELAY
																		UNDER TEST
SRC	AG44		1		281B					1U(SRC)	G		P	0	46	23	21.5	
								(ON)NO		1U(SRC)	G		P	H	46	4.0	3.8	REQT APPLY WITH SEC
								(ONA)NO		1U(SRC)	G		P	R	46	2.1	2.4	WINDING SHORT
										1U(SRC)	G		S	0		70	65	CIRCUITED
TE	AJ5		1		220			(TEA)NO		U(TE)	G			0		13.2	12.6	
TEA	1/2AK4		1		202			(TE)NO		1U(TEA)	G			0		11.9	11.3	MOUNTED WITH TP5
TP1	1/2AK4		1		202					1L(TP1)	G			0		11.9	11.3	MOUNTED WITH TP2
TP2	1/2AK4		1		202					1U(TP2)	G			0		11.9	11.3	MOUNTED WITH TP1
TP3	1/2AK4		1		202					1L(TP3)	G			0		11.9	11.3	MOUNTED WITH TP4
TP4	1/2AK4		1		202					1U(TP4)	G			0		11.9	11.3	MOUNTED WITH TP3
TP5	1/2AK4		1		202					1L(TP5)	G			0		11.9	11.3	MOUNTED WITH TEA
TPDK	1/2AK4		1		202					1L(TPDK)	G			0		11.9	11.3	MOUNTED WITH D8
Z	1/2AK8		1		204					1L(Z)	G			0		17	16	MOUNTED WITH DOM

SHEET NOTES:

1. REMOVE THE RELAY DELAY TIMER ED-66715 OR ED-99556 OR ED99555 FROM CONNECTOR "RD" BEFORE TEST.
2. REMOVE THE RELAY DELAY TIMER ED-99555 FROM CONNECTOR "RD" BEFORE TEST.

PAGE 2

5

DIAL CONFERENCE TRUNK CIRCUIT (2)		SD-66902-01-FI
BELL TELEPHONE LABORATORIES INCORPORATED	DWG SIZE 6S	PRINTED IN U. S. A.

TCI Library www.telephonecollectors.info

CAD 1
(FOR APP FIG. 2)

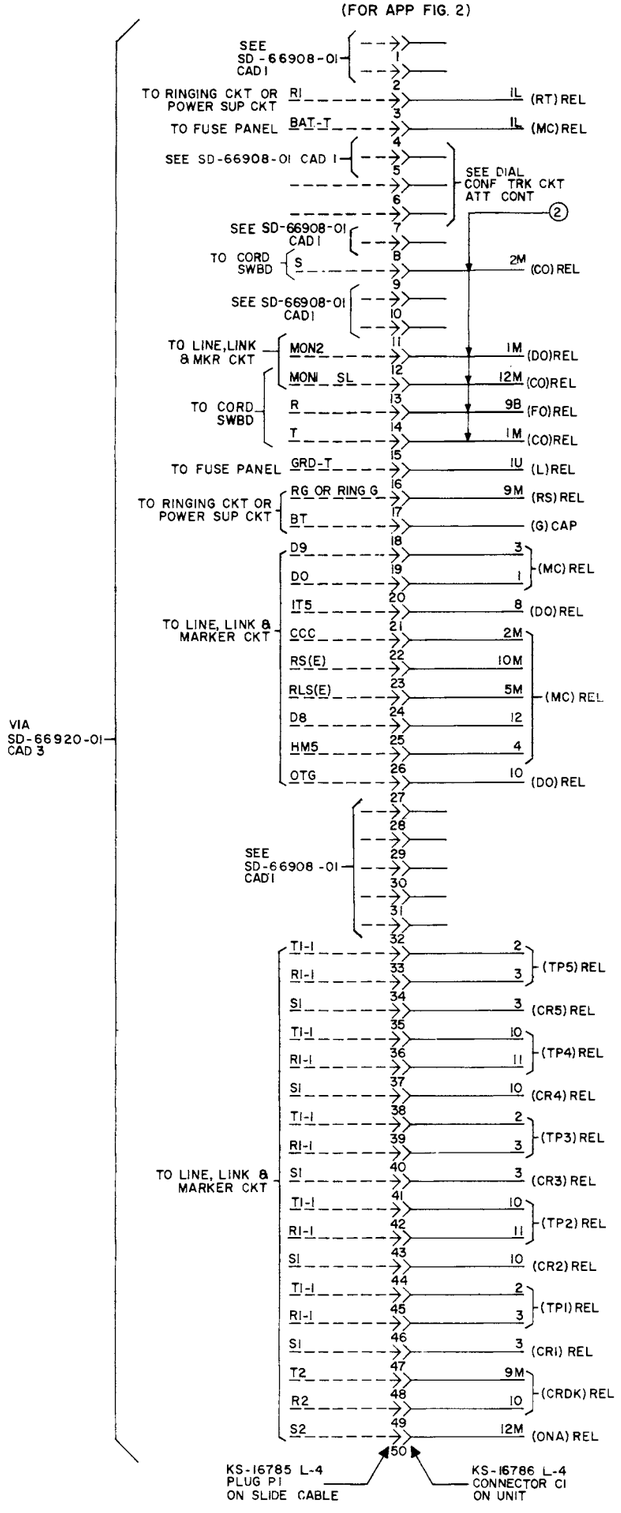

DRAWING ISSUE	
SUPERSEDES ISS 1	
2D	RKJ WAF MCJ
3D	PJS RKJ GFH
4D	JJH SAK GFH
6D	BMM PJS RHP

DIAL CONFERENCE TRUNK CIRCUIT ②

SD-66902-01-GI

BELL TELEPHONE LABORATORIES INCORPORATED

DWG SIZE 6S

PRINTED IN U.S.A.

SD-66902-01-GI

TCI Library www.telephonecollectors.info