TABLE A

SD & T DWG ISSUES ARE IN AGREEMENT AS FOLLOWS:

SD-3F008-01 ISSUE	1	1	2A	3D	4B	4B	4B	4B	5B	6B	8B	13B	13B			
T*3F008-11 ISSUE	1	2	3	4	5	6	7	8	9	10	11	12	13			

SHEET INDEX

SECTION A			SECTION B			SECTION C			SECTION D		
AUTOGHG	SHEET	ISS	SHEET	ISS	SHEET	ISS	SHEET	ISS	SHEET	ISS	SHEET	ISS
	A1	13	B1	3	B61		C1	3	C61		D1	13
	A2	13	B2	3	B62		C2	3	C62		D2	13
	A3	13	B3	3	B63		C3	3	C63		D3	8
	A4	X	B4	3	B64		C4	3	C64		D4	10
	A5		B5	3	B65		C5	3	C65		D5	12
	A6		B6	X	B66		C6	3	C66		D6	13
	A7		B7		B67		C7	3	C67		D7	12
	A8		B8		B68		C8	3	C68		D8	9
	A9		B9		B69		C9	X	C69		D9	9
	A10		B10		B70		C10		C70		D10	X
	A11		B11		B71		C11		C71		D11	
	A12		B12		B72		C12		C72		D12	
	A13		B13		B73		C13		C73		D13	
	A14		B14		B74		C14		C74		D14	
	A15		B15		B75		C15		C75		D15	
	A16		B16		B76		C16		C76		D16	
	A17		B17		B77		C17		C77		D17	
	A18		B18		B78		C18		C78		D18	
	A19		B19		B79		C19		C79		D19	
	A20		B20		B80		C20		C80		D20	
	A21		B21		B81		C21		C81		D21	
	A22		B22		B82		C22		C82		D22	
	A23		B23		B83		C23		C83		D23	
	A24		B24		B84		C24		C84		D24	
	A25		B25		B85		C25		C85		D25	
	A26		B26		B86		C26		C86		D26	
	A27		B27		B87		C27		C87		D27	
	A28		B28		B88		C28		C88		D28	
	A29		B29		B89		C29		C89		D29	
	A30		B30		B90		C30		C90		D30	
	A31		B31		B91		C31		C91		D31	
	A32		B32		B92		C32		C92		D32	
	A33		B33		B93		C33		C93		D33	
	A34		B34		B94		C34		C94		D34	
	A35		B35		B95		C35		C95		D35	
	A36		B36		B96		C36		C96		D36	
	A37		B37		B97		C37		C97		D37	
	A38		B38		B98		C38		C98		D38	
	A39		B39		B99		C39		C99		D39	
	A40		B40		B100		C40		C100		D40	
	A41		B41		B101		C41		C101		D41	
	A42		B42		B102		C42		C102		D42	
	A43		B43		B103		C43		C103		D43	
	A44		B44		B104		C44		C104		D44	
	A45		B45		B105		C45		C105		D45	
	A46		B46		B106		C46		C106		D46	
	A47		B47		B107		C47		C107		D47	
	A48		B48		B108		C48		C108		D48	
	A49		B49		B109		C49		C109		D49	
	A50		B50		B110		C50		C110		D50	
	A51		B51		B111		C51		C111		D51	
	A52		B52		B112		C52		C112		D52	
	A53		B53		B113		C53		C113		D53	
	A54		B54		B114		C54		C114		D54	
	A55		B55		B115		C55		C115		D55	
	A56		B56		B116		C56		C116		D56	
	A57		B57		B117		C57		C117		D57	
	A58		B58		B118		C58		C118		D58	
	A59		B59		B119		C59		C119		D59	
	A60		B60		B120		C60		C120		D60	

TABLE E - FEATURE TABLE - SEE NOTE 52 & 53

ITEM	SD ISS	DESCRIPTION		SPECIFY FIG.	SPECIFY WRG	SPECIFY APP	SPECIFY QTY	AUTO OPT	REMARKS
/	EA	EB		EC	ED	EE	EF	EG	EH
1		PROVIDES FOR A 3B INTERFACE CIRCUIT ON RING NODE FRAME.		H1			1		
2		PROVIDES CONNECTION TO ADJACENT LINK NODE A CIRCUIT.		H3			1		(SEE NOTE 56)
3*		PROVIDES CONNECTION TO 3B20 PROCESSOR CONTROL.		H4			1		
4		PROVIDES INTERFRAME BUFFERS	PADDED	2		Z	1		
			UNPADDED			Y	1		
5		PROVIDES FOR A LINK INTERFACE	NON-ENCRYPTED 2.4/4.8K BPS	5		X	1		
			NON-ENCRYPTED 56K			V	1		
			ENCRYPTED 4800 BPS			U	1		
			ENCRYPTED 56K			T	1		
6		PROVIDES A NEW CODED "MP_" CP (MC3F012A1)		(1) (4)		P P	1 1	R R	
A*		PROVIDES CABLING (BAL RING BUS) TO NEXT HIGHEST NUMBERED OR (00) RNC (ACI ONLY).		H7			1		
B		PROVIDES FOR ONE (1) LINK NODE (2ND NODE ON UNIT)		4		N,R	1	Q	
C		PROVIDES ATTACHED PROCESSOR (AP) cp FOR (DLN) DIRECT LINK NODE.	Zmb Xmb	(6) (6)		ZK ZJ	1	ZG	
D		PROVIDES THE "RPC" NODE		1		R,N	1	Q	
E		PROVIDES FOR PARTIALLY EQUIPPED FIRST NODE AS A LINK NODE.		3		P,N	1		
F		PROVIDES A NEW CODED "RI_" CP (REQ'D FOR 1PSS-R4 & 4ESS/ACI ONLY)		(1) (4)		N,D N,D	1 1	N N	
G		PROVIDES 2 RS232 & 2 V.35 PORTS		7			1		
H		PROVIDES FOUR RS232 PORTS		8			1		
I		PROVIDES FOUR RS449 PORTS		9			1		
J		PROVIDES FOUR V.35 PORTS		10			1		
K		EQUIPS THE FOUR PORT "LI" CP AS (SADC NODE) FOR ACI.		11			1		
L*		PROVIDES CABLING TO DATA FACILITIES CAB (AUTOPLEX)		H13 H15			1 1		(RS232) (SEE NOTE 61) (RS449)
M		PROVIDES CONNECTION BETWEEN "RPCN" & "LN","DLN" & "LN" OR "LN & LN" ON SAME UNIT.		H2			1		(SEE NOTE 56 INFORMATION ONLY)
N		PROVIDES CONNECTION BETWEEN TWO (2) ADJACENT 3BI UNITS.		H8			1		(SEE NOTE 56 INFORMATION ONLY)
P*		PROVIDES V.35 PROTOCAL		H14			1		
R		PROVIDES MEMORY DATA LINK (MDL)		16			1	12	
S		PROVIDES INTEGRATED RING NODE (IRN)		13	HA	ZC	1	ZD	(SEE NOTE 56)
T		PROVIDES INTERFRAME BUFFERS	6 MHz VERSION 4K BYTES	14		A	1		
			16 BYTES/8 MHz	14		ZA	1		
			4K BYTES/8 MHz	14		ZB	1		
U		PROVIDES DIRECT V.35 PORT AT THE RING.		15			1	E	
V		LONG MESSAGE OPERATIONS.		(3),(4)	K		1		
W		PROVIDES TOKEN TRACK FEATURE.		(1) (4)		D D		M M	
X		PROVIDES PROGRAMMING RESISTOR CONNECTOR		(1),(3) (4)		ZE ZF			
Y		PROVIDES DIRECT LINK MODE E(DLME)		17			1		
Z		PROVIDES ENHANCED MESSAGE SAMPLING CAPABILITIES		18			ZL ZM		

ENGINEERING NOTES

51. SEE TABLE A FOR DRAWING FROM WHICH THIS DRAWING IS MADE.
52. ITEMS DESIGNATED WITH NUMBERS ARE COMMON FEATURES. ITEMS DESIGNATED BY LETTERS ARE OPTIONAL FEATURES.
53. ITEMS DESIGNATED WITH AN ASTERISK IN TABLE E CONTAIN FIGURES OR OPTIONS REQUIRED BUT NOT COVERED ON ASSOCIATED STANDARD EQUIPMENT MANUFACTURING DRAWING.
54. EQUIPMENT ARRANGEMENT:
    J3F011AA-1
55. CONNECTING DRAWING:

T*3F009-11	LINK NODE A
T*3F010-11	LINK NODE B
T*4C099-11	3B20 PROCESSOR CONT
T-3F006-11	DIGITAL FACILITIES ACCESS
T-3F005-11	ANALOG FACILITIES ACCESS
T-3F021-11	DIGITAL FACILITIES ACCESS
T-3F023-11	DIGITAL FACILITIES ACCESS
T-3F029-11	DIGITAL FACILITIES ACCESS UNIT
SD-2R236-01	DATA FACILITIES CAB (APX)

56. THE INFORMATION SHOWN IN THESE FIGURES IS FOR RECORD ONLY. THE WIRING DESCRIBED IS ORDERED PER FR/CAB. J-DWG ASSOCIATED WITH APPROPRIATE APPLICATION.
57. ADDITIONAL FIGS ARE SHOWN ON J3F011AA-1 TABLE A. THOSE FIGS SHOWN ON J3F011AA-1 CORRESPOND TO APP FIGS SHOWN IN SD-3F008-01.
58. "PM" (PRINTED WIRING) AND GARDNER-DENVER APPLIED "D4" WIRING IS PER ED-3F012-30 AND D4J3F011AA-1.
59. THIS DRAWING CONTAINS INFORMATION THAT HAS MULTI-APPLICATION USAGE (SEE TABLE D FOR DESIRED APPLICATION TO FIG/APP.)
60. THIS IS AN APPARATUS CHANGE ONLY. A LARGER CONN (982AE) REPLACED A (982AC) CONN FOR A MORE EFFECTIVE FIT.
61. FOR CABLE ASSIGNMENT SEE APPLICATION SCHEMATIC SD-2R236-01.
62. THESE CABLES SHALL BE ORDERED WHEN THIS CIRCUIT (T*3F008-11) IS LAST EQUIPPED CIRCUIT ON RNC/RNF. IF T*3F008-11 IS NOT THE LAST EQUIPPED CIRCUIT ON RNC/RNF, SEE T*3F009-11 OR T*3F010-11 ORDERING OF CABLE. (ONLY ONE SET OF PD 8 - PD 11 CA PER RNC/RNF.
63. EQL'S ARE APPLICATION DEPENDENT AND MUST BE DETERMINED FROM APPROPRIATE APPLICATION DOCUMENT.

ND03F011CB-1 3-3-83

DDS DDS	KCH		1

NO RECORD CHANGE. B & C SHEETS ADDED.
5-12-83 CL D

BRJ BRJ	KCH		2

TABLE E, ITEM 4 ADDED. NO. 2 STP ONLY ADDED TO DESCRIPTION OF ITEM 2 & 3. FIG. H5 ADDED.
2-14-84 CL D

FAO FAO	KCH		3

TABLE E,ITEM 5 ADDED.FIG. H6 ADDED.
12-11-84 CL D

BJG BJG	KCH		4

TABLE G ITEM 15 & 16 ADDED. FIG. 1, 2,4 & 5 ADDED.
5-1-85 CL D

OEM OEM	KCH		5

IN TABLE D, FIG. 6 ADDED. FIG. H7 ADDED.
9-26-85 CL D

TEM TEM	KCH		6

TABLE E ITEMS 20,21,22,23,24 & 24 AND FIGURES H10 - H15 ADDED.
5-8-86 CL B

WGS WGS	KCH		7

EMG. NOTE 55 CHANGED. NOTE 62 ADDED. FIG. H11 RMV.
2-26-87 CL D

OEM OEM	KCH		8

FIGS. 11,12,13,14 & 15 ADDED.
10-8-87 CL B

WGS WGS	KCH		9

APP OPT ZA, ZB, ZC & ZD ADDED.
7-18-88 CL B

WJH JFL	KCH		10

APP ZE, ZF, ZG & ZJ ADDED.
5-17-89 CL B

RDS JFL	KCH		11

FIG. H11 ADDED. ITEMS Y & Z ADDED. MISC CHGS MADE.
4-3-91 CL B

RDS JFL	KCH		12

MISC CHGS TO TABLES G, G3, G4, G5 & G7.
5-24-94 CL B

RDS RDS	MM		13

AT&T - PROPRIETARY
THIS DOCUMENT CONTAINS PROPRIETARY INFORMATION OF AT&T AND IS NOT TO BE DISCLOSED OR USED EXCEPT IN ACCORDANCE WITH APPLICABLE AGREEMENTS
Copyright © 1996 AT&T
Unpublished & Not for Publication
All Rights Reserved

RM99

SIGNALING AND PACKET SWITCHING SYSYEMS
3B INTERFACE CIRCUIT

DWG SIZE	ISSUE
C2	13

AT&T	T*3F008-11	SHEET A1 OF 25

M2

PRINTED IN U.S.A.

TABLE G - CABLING (NO. 2 STP A-1 FR)

ITEM	FIG.	OPT	LEADS PER FIG.	CABLES PER FIG.	CODE	FROM	CA DESIG	EQPT LOC	TO	CA DESIG	EQPT LOC	CABLE SHIELD	REMARKS
	GA	GB	GC	GD	GE	GF	GG	GH	GJ	GK	GL	GM	GN
1	H4		10	1	816AS	RN FR	HE11	3B INTERFACE PO-086-100	PROCESSOR CONT	1	3820 PROCESSOR (NOTE 63)	1	FORMED PER ED-3F004-30 GR 15A, 15C (MAX LENGTH IS 100 FEET)
2	H4		10	1	816AS	RN FR	HE12	3B INTERFACE P1-086-300	PROCESSOR CONT	1	3820 PROCESSOR (NOTE 63)	1	FORMED PER ED-3F004-30 GR 15B, 15D (MAX LENGTH IS 100 FEET)
3	H4		10	1	816AS	RN FR	HE11	3B INTERFACE 030-086-100	PROCESSOR CONT	1	3821 PROCESSOR (NOTE 63)	1	FORMED PER ED-3F004-30 GR 15BS, 15BU, 15BW OR 15BY (MAX LENGTH IS 100 FEET)
4	H4		10	1	816AS	RN FR	HE12	3B INTERFACE 030-086-300	PROCESSOR CONT	1	3821 PROCESSOR (NOTE 63)	1	FORMED PER ED-3F004-30 GR 15BT, 15BV, 15BX OR 15BZ (MAX LENGTH IS 100 FEET)

TABLE G1 - CABLING (NCP B-1 FR)

ITEM	FIG.	OPT	LEADS PER FIG.	CABLES PER FIG.	CODE	FROM	CA DESIG	EQPT LOC	TO	CA DESIG	EQPT LOC	CABLE SHIELD	REMARKS
	GA	GB	GC	GD	GE	GF	GG	GH	GJ	GK	GL	GM	GN
1	H4		10	1	816AS	NCP-RN FR	HL9	3B INTERFACE 054-086-100	PROCESSOR CONT	1	3820 PROCESSOR 076-068-145	1	FORMED PER ED-3F004-30 GR13BA 15BE (MAX LENGTH IS 100 FEET)
2	H4		10	1	816AS	NCP-RN FR	HL10	3B INTERFACE 030-086-100	PROCESSOR CONT	1	3820 PROCESSOR 076-068-151	1	FORMED PER ED-3F004-30 GR13BB 15BF (MAX LSNGTH IS 100 FEET)
3	H4		10	1	816AS	NCP-RN FR	HL11	3B INTERFACE 054-086-300	PROCESSOR CONT	1	3820 PROCESSOR 176-068-145	1	FORMED PER ED-3F004-30 GR13BC 15BG (MAX LENGTH IS 100 FEET)
4	H4		10	1	816AS	NCP-RN FR	HL12	3B INTERFACE 030-086-300	PROCESSOR CONT	1	3820 PROCESSOR 176-068-151	1	FORMED PER ED-3F004-30 GR13BD 15BH (MAX LENGTH IS 100 FEET)

TABLE G2 - CABLING (1A ESS B-1 FR)

ITEM	FIG.	OPT	LEADS PER FIG.	CABLES PER FIG.	CODE	FROM	CA DESIG	EQPT LOC	TO	CA DESIG	EQPT LOC	CABLE SHIELD	REMARKS
	GA	GB	GC	GD	GE	GF	GG	GH	GJ	GK	GL	GM	GN
1	H4		10	1	816AS	RN FR	HL13	054-086-100	PROCESSOR CONT	1	(NOTE 63)	1	FORMED PER ED-3F004-30 GR15BJ (MAX LENGTH IS 100 FEET)
2	H4		10	1	816AS	RN FR	HL14	030-086-100	PROCESSOR CONT	1	(NOTE 63)	1	FORMED PER ED-3F004-30 GR15BK (MAX LENGTH IS 100 FEET)
3	H4		10	1	816AS	RN FR	HL15	054-086-300	PROCESSOR CONT	1	(NOTE 63)	1	FORMED PER ED-3F004-30 GR15BL (MAX LENGTH IS 100 FEET)
4	H4		10	1	816AS	RN FR	HL16	030-086-300	PROCESSOR CONT	1	(NOTE 63)	1	FORMED PER ED-3F004-30 GR15BM (MAX LENGTH IS 100 FEET)
5	H4		10	1	816AS	RN FR	HL17	065-086-100	PROCESSOR CONT	1	(NOTE 63)	1	FORMED PER ED-3F004-30 GR15BN (MAX LENGTH IS 100 FEET, SHEET NOTE 1)
6	H4		10	1	816AS	RN FR	HL18	039-086-100	PROCESSOR CONT	1	(NOTE 63)	1	FORMED PER ED-3F004-30 GR15BP (MAX LENGTH IS 100 FEET, SHEET NOTE 1)
7	H4		10	1	816AS	RN FR	HL19	065-086-300	PROCESSOR CONT	1	(NOTE 63)	1	FORMED PER ED-3F004-30 GR15BQ (MAX LENGTH IS 100 FEET, SHEET NOTE 1)
8	H4		10	1	816AS	RN FR	HL20	039-086-300	PROCESSOR CONT	1	(NOTE 63)	1	FORMED PER ED-3F004-30 GR15BR (MAX LENGTH IS 100 FEET, SHEET NOTE 1)

TABLE G3 - CABLING (5ESS C-1 FR)

ITEM	FIG.	OPT	LEADS PER FIG.	CABLES PER FIG.	CODE	FROM	CA DESIG	EQPT LOC	TO	CA DESIG	EQPT LOC	CABLE SHIELD	REMARKS
	GA	GB	GC	GD	GE	GF	GG	GH	GJ	GK	GL	GM	GN
1	H4		10	1	816AS	RN 00/32	HQ2	019-086-100	PCCA BAY 0		~~051-104-145~~ (NOTE 63)	3	FORMED PER ED-3F004-31 GR 15E (MAX LENGTH IS 100 FEET)
2	H4		10	1	816AS	RN 00/32	HQ3	045-086-100	PCCA BAY 0		~~051-104-151~~ (NOTE 63)	3	FORMED PER ED-3F004-31 GR 15F (MAX LENGTH IS 100 FEET)
3	H4		10	1	816AS	RN 00/32	HQ8	019-086-300	PCCA BAY 1		~~151-104-145~~ (NOTE 63)	3	FORMED PER ED-3F004-31 GR 15G (MAX LENGTH IS 100 FEET)
4	H4		10	1	816AS	RN 00/32	HQ9	045-086-300	PCCA BAY 1		~~151-104-151~~ (NOTE 63)	3	FORMED PER ED-3F004-31 GR 15H (MAX LENGTH IS 100 FEET)
5	H4		10	1	816AS	RN 00/32	HQ10	028-086-100	PCCA		(NOTE 63)	3	FORMED PER ED-3F004-31 GR 15N (MAX LENGTH IS 100 FEET, SHEET NOTE 1)
6	H4		10	1	816AS	RN 00/32	HQ11	053-086-100	PCCA		(NOTE 63)	3	FORMED PER ED-3F004-31 GR 15P (MAX LENGTH IS 100 FEET, SHEET NOTE 1)
7	H4		10	1	816AS	RN 00/32	HQ12	028-086-300	PCCA		(NOTE 63)	3	FORMED PER ED-3F004-31 GR 15R (MAX LENGTH IS 100 FEET, SHEET NOTE 1)
8	H4		10	1	816AS	RN 00/32	HQ13	053-086-300	PCCA		(NOTE 63)	3	FORMED PER ED-3F004-31 GR 15S (MAX LENGTH IS 100 FEET, SHEET NOTE 1)

TABLE F - FUSE REQUIREMENTS

ITEM	FIG.	OPT	FA	FB	FC	FD	FE	FF	FG	FH	FJ
					FUSE						
					AMP	CODE	POTENTIAL	DESIG	QTY	LOCATION	REMARKS

SHEET NOTES

1. ORDER THESE CABLES ONLY WHEN J3F011AA-1 IS EQUIPPED AS A "DLN" DIRECT LINK NODE (LIST 12 SPEC.)

TABLE L - WIRE REQUIREMENTS (PER FIG.)

ITEM	LA	LB	LC	LD	LE
	FIG.	COLOR	TYPE	FT/FIG.	REMARKS

MANUFACTURING NOTES
CONVENTIONS

SWITCHBOARD CABLE

INSTALLER WIRING

SYMBOL FOLLOWED BY LEAD DESIGNATION INDICATES LEAD TO ANOTHER CIRCUIT CONTROLLED BY THIS CIRCUIT.

SYMBOL FOLLOWED BY LEAD DESIGNATION INDICATES LEAD TO THIS CIRCUIT, CONTROLLED BY ANOTHER CIRCUIT.

LP LOOP LEAD TO BE CUT AND CONNECTED WHEN ASSOCIATED OPTION IS SPECIFIED.

F,R,S LEAD IS IN 1ST, 2ND, OR 3RD EXTRA STITCH, RESPECTIVELY(PROGRESSING) TOWARD TIP OF CABLE ARM.

AA,AB CROSS REFERENCE SYMBOLS IDENTIFY CONNECTION OF PIGTAIL COMPONENTS LISTED IN THE B SECTION.

X WITHOUT, AS X X Y INDICATES X WITHOUT Y.

* BREAK IN CONTINUITY OF RUN WHEN OPTION IS EQUIPPED

ANOTHER CONNECTION TO TERMINAL APPEARS IN THE RUN.

(D) A CONNECTION POINT OF A BIFURCATE TERMINAL.

& A CONNECTION POINT OF A BIFURCATE TERMINAL WITH ANOTHER CONNECTION APPEARING IN THE RUN.

/ A SLASH (/) IN THE TERMINAL COLUMN SEPARATES THE SCHEMATIC NUMBER SHOWN ON THE LEFT FROM THE IDENTIFYING NUMBER SHOWN TO THE RIGHT OF THE SLASH, IDENTIFY TERMINALS AS FOLLOWS:

A) TERMINALS IN HORIZONTAL ROWS. NUMBER 1 & UP, LEFT TO RIGHT. SUFFIX T, M, OR B INDICATES TOP, MIDDLE OR BOTTOM ROW (EXAMPLE: 2T, 1M, 3B, ETC.)

B) TERMINALS IN VERTICAL ROWS. NUMBER 1 & UP, BOTTOM TO TOP. SUFFIX L OR R INDICATES LEFT OR RIGHT ROW (EXAMPLE: 2L, 3R, ETC.).

C) TO FACILITATE IDENTIFICATION OF UNSTAMPED TERMINAL NUMBERING SEE M-915-200.

B TERMINAL NEAREST BASE OF TERMINAL STRIP.

E ADJACENT ROWS OF TERMINALS.

K TOP OR LEFT ROW OF TERMINALS.

1W,2W, ONE, TWO, THREE OR FOUR CONDUCTOR
3W,4W CROSS-CONNECTION WIRE.

NC NO CONNECTION.

DU DOUBLING UP TERMINAL.

MLT MULTIPLE LIKE NUMBERED TERMINALS OF LIKE DESIGNATED APPARATUS.

F A SUFFIX TO A TERMINAL NUMBER INDICATING CONNECTION TO FRONT OF COMPONENT.

X,Y COMMA SEPARATING OPTIONS INDICATES "OR", AS X OV(Y.

P PAIR P101, P102, ETC. INDICATES PAIR NUMBER.

POS IN THE COLOR FIELD OF A PIGTAIL CONNECTION INDICATES POSITIVE (+) END OF THE PIGTAIL.

TO IN THE COLOR FIELD OF A PIGTAIL CONNECTION INDICATES THE TERMINAL TO WHICH THE ARROW OF A DIODE POINTS.

12		FIG.18 ZL,ZH			ZL,ZH				
					18				
12		FIG. 16	FIG. 12		16		12		
12		ZG OR ZJ	ZG OR NONE		ZG,ZJ				
12		17	ZJ, ZK, ZG		17				
12		ZK	ZG		ZK		ZG		
10		ZC OR ZD	ZD OR F		ZC		ZD		
10		ZB	A OR NONE		ZB		A		
10		ZA	Y OR NONE		ZA				
8		A	Z		A				
6		N	N		N		N		
5		P APP	R		P		R		
		P APP	R		P		R		
		R APP	Q		R		Q		
		Y OR Z			Y,Z				
	H4	SK. C & D	SK. A & B	60	C & D		A & B		
CHANGE ON ISSUE	SPECIFY IF OFFICE RECORDS	DO NOT SPECIFY	THIS OPTION WAS FURNISHED	SEE NOTE	STD	ASM	MD		
					RATING				

TABLE B - RECORD OF FIGURES, COMPONENTS, AND WIRING CHANGES

	CAD 7C	H14			
	CAD 7B	H15			
	CAD 7A	H13, H10			
10	CAD 6	H12			
	CAD 5	H6			
	CAD 4	H5			
	CAD 3A	H4			
	CAD 2D	H2			
5	CAD 2C	H3			
	CAD 2B	H9			
	CAD 2A	H8			
	CAD 1B	H7			
1	CAD 1A	H1			

LINE	FIG.	OPT	FIG.	MRG	APP	REMARKS
	SD-3F008-01		T*3F008-11			

SCHEMATIC FIGURES AND OPTIONS AGREE WITH SIMILARLY DESIGNATED WIRING DIAGRAM FIGURES AND OPTIONS EXCEPT AS SHOWN ABOVE. NE ASSIGNED FIGURES AND OPTIONS ARE PREFIXED WITH LETTER H AND HAVE NO SCHEMATIC EQUIVALENT, UNLESS SHOWN ABOVE. ITEMS IN ( ) PARENTHESES ARE FOR INFORMATION ONLY AND ARE NOT TO BE RECORDED ON JOB WIRING LIST DRAWING.

CA	CB	CC	CD	CE	CF

TABLE C - SD DWG & T DWG CROSS-REFERENCE

ITEM	A SH	FIG.	DIST FR	REQUIREMENTS
	HA	HB	HC	HD

TABLE H - DISTRIBUTING FRAME REQUIREMENTS

SEE PROPRIETARY NOTICE ON SHEET A1
Copyright © 1991 AT&T
Unpublished & Not for Publication
All Rights Reserved

38 INTERFACE CIRCUIT

DWG SIZE C2 | ISSUE 13

AT&T | T*3F008-11 | SHEET A2

M2

PRINTED IN U.S.A.

TABLE G4 - CABLING (NCP D-1 CAB), (SEE TABLE G8 FOR V.35 CABLE)

ITEM	FIG.	OPT	LEADS PER FIG.	CABLES PER FIG.	CODE	FROM	CA	EQPT LOC	TO	CA DESIG	EQPT LOC	CABLE SHIELD	REMARKS
	GA	GB	GC	GD	GE	GF	GG	GH	GJ	GK	GL	GM	GN
1	H4		10	1	816AS	RN CAB,NCP 3BI	HR2 7	019-086-100	PROCESSOR CONT	1	3B20 PROCESSOR 051-104-151	1	FORMED PER ED-3F004-31 GR 15A 15J (MAX LENGTH IS 100 FEET)
2	H4		10	1	816AS	RN CAB,NCP 3BI	HR2 8	045-086-100	PROCESSOR CONT	1	3B20 PROCESSOR 051-104-145	1	FORMED PER ED-3F004-31 GR 15B 15K (MAX LENGTH IS 100 FEET)
3	H4		10	1	816AS	RN CAB,NCP 3BI	HR5 9	019-086-300	PROCESSOR CONT	1	3B20 PROCESSOR 151-104-151	1	FORMED PER ED-3F004-31 GR19C 15L (MAX LENGTH IS 100 FEET)
4	H4		10	1	816AS	RN CAB,NCP 3BI	HR5 10	045-086-300	PROCESSOR CONT	1	3B20 PROCESSOR 151-104-145	1	FORMED PER ED-3F004-31 GR19D 15M (MAX LENGTH IS 100 FEET)

TABLE G5 - CABLING (1PSS-R4 OR NO. 2A STP E-1 CAB), (SEE TABLE G8 FOR V.35 CABLE)

ITEM	FIG.	OPT	LEADS PER FIG.	CABLES PER FIG.	CODE	FROM	CA	EQPT LOC	TO	CA	EQPT LOC	CABLE SHIELD	REMARKS
	GA	GB	GC		GE	GF	GG	GH	GJ	GK	GL	GM	GN
1	H7		16	1		RNC	PD8	3B INTERFACE	3B1, LINK MODE B, DS1 B		RNC	1	FORMED PER ED-3F064-37 GR 14A (SEE NOTE 62)
2	H7		16	1		RNC	PD9	3B INTERFACE	3B1, LINK MODE B, DS1 B		RNC	1	FORMED PER ED-3F064-37 GR 14B (SEE NOTE 62)
3	H7		16	1		RNC	PD10	3B INTERFACE	3B1, LINK MODE B, DS1 B		RNC	1	FORMED PER ED-3F064-37 GR 14C (SEE NOTE 62)
4	H7		16	1		RNC	PD11	3B INTERFACE	3B1, LINK MODE B, DS1 B		RNC	1	FORMED PER ED-3F064-37 GR 14D (SEE NOTE 62)
5	H4		10	1	816AS	RNC 3BI	PD12	019-086-100	PROCESSOR CONT	1	(NOTE 63)	1	FORMED PER ED-3F064-37 GR 15A
6	H4		10	1	816AS	RNC 3BI	PD13	019-086-300	PROCESSOR CONT	1	(NOTE 63)	1	FORMED PER ED-3F064-37 GR 15B
7	H4		10	1	816AS	RNC 3BI	PD12	019-086-100	3B21 PROCESSOR	1	(NOTE 63)	1	FORMED PER ED-3F064-37 GR 15G,15J,15R OR 15T
8	H4		10	1	816AS	RNC 3BI	PD13	019-086-300	3B21 PROCESSOR	1	(NOTE 63)	1	FORMED PER ED-3F064-37 GR 15H,15K,15S OR 15U

TABLE G6 - CABLING (4ESS/ACI) (4ESS/RBOC E-1 CAB), (SEE TABLE G8 FOR V.35 CABLE)

ITEM	FIG.	OPT	LEADS PER FIG.	CABLES PER FIG.	CODE	FROM	CA DESIG	EQPT LOC	TO	CA DESIG	EQPT LOC	CABLE SHIELD	REMARKS
	GA	GB	GC	GD	GE	GF	GG	GH	GJ	GK	GL	GM	GN
1	H7		16	1	3129-0253	4ESS/ACI RNC 3BI	PD8	R0 OUT BAL 300	RNC-3B1 LN B, DS1 B		R0 IN BAL 100	1	FORMED PER ED-3F064-37 GR 14A (SEE NOTE 62)
2	H7		16	1	3129-0253	4ESS/ACI RNC 3BI	PD9	R0 OUT BAL 313	RNC-3B1 LN B, DS1 B		R0 IN BAL 113	1	FORMED PER ED-3F064-37 GR 14B (SEE NOTE 62)
3	H7		16	1	3129-0253	4ESS/ACI RNC 3BI	PD10	R1 IN BAL 100	RNC-3B1 LN B, DS1 B		R1 OUT BAL 300	1	FORMED PER ED-3F064-37 GR 14C (SEE NOTE 62)
4	H7		16	1	3129-0253	4ESS/ACI RNC 3BI	PD11	R1 IN BAL 113	RNC-3B1 LN B, DS1 B		R1 OUT BAL 313	1	FORMED PER ED-3F064-37 GR 14D (SEE NOTE 62)
5	H4		10	1	816AS	4ESS/ACI RNC 3BI	PD12	019-086-100	PROCESSOR CONT	1	(NOTE 63)	1	FORMED PER ED-3F064-37 GR 15A
6	H4		10	1	816AS	4ESS/ACI RNC 3BI	PD13	019-086-300	PROCESSOR CONT	1	(NOTE 63)	1	FORMED PER ED-3F064-37 GR 15B
7	H4		10	1	816AS	4ESS/ACI RNC 3BI	PD14	037-086-100	PROCESSOR CONT	1	(NOTE 63)	1	FORMED PER ED-3F064-37 GR 15C (MAX LENGTH 100 FEET) SHEET NOTE 1
8	H4		10	1	816AS	4ESS/ACI RNC 3BI	PD15	037-086-300	PROCESSOR CONT	1	(NOTE 63)	1	FORMED PER ED-3F064-37 GR 15D (MAX LENGTH 100 FEET) SHEET NOTE 1
9	H4		10	1	816AS	4ESS/ACI RNC 3BI	PD16	053-086-100	PROCESSOR CONT	1	(NOTE 63)	1	FORMED PER ED-3F064-37 GR 15E (MAX LENGTH 100 FEET) SHEET NOTE 1
10	H4		10	1	816AS	4ESS/ACI RNC 3BI	PD17	053-086-300	PROCESSOR CONT	1	(NOTE 63)	1	FORMED PER ED-3F064-37 GR 15F (MAX LENGTH 100 FEET) SHEET NOTE 1

TABLE G7 - CABLING (AUTOPLEX)

ITEM	FIG.	OPT	LEADS PER FIG.	CABLES PER FIG.	CODE	FROM	CA DESIG	EQPT LOC	TO	CA DESIG	EQPT LOC	CABLE SHIELD	REMARKS
	GA	GB	GC	GD	GE	GF	GG	GH	GJ	GK	GL	GM	GN
1	H13		12	1	816A	RNC 3BI	PD25		DATA FACILITIES RS232		(SEE NOTE 61)	3	FORMED PER ED-3F064-37 GR 16
2													
3	H15		24	1	807AS	RNC 3BI	PD27		DATA FACILITIES RS449		(SEE NOTE 61)	3	FORMED PER ED-3F064-37 GR 18
4	H4		10	1	816AS	RNC 3BI	PD12	019-086-100 OR 037-086-100	PROCESSOR CONT		(SEE NOTE 63)	1	FORMED PER ED-3F064-37 GR 15A,15G,15J,15L OR 15N
5	H4		10	1	816AS	RNC 3BI	PD13	019-086-300 OR 037-086-300	PROCESSOR CONT		(SEE NOTE 63)	1	FORMED PER ED-3F064-37 GR 15B,15H,15K,15M OR 15P

TABLE G8 - CABLING (V.35 PROTOCOL)

ITEM	FIG.	OPT	LEADS PER FIG.	CABLES PER FIG.	CODE	FROM	CA DESIG	EQPT LOC	TO	CA DESIG	EQPT LOC	CABLE SHIELD	REMARKS
	GA	GB	GC	GD	GE	GF	GG	GH	GJ	GK	GL	GM	GN
1	H14		3	1	811AS	RNC 3BI	PD26		DATA FACILITIES V.35			3	FORMED PER ED-3F064-37 GR 17
2	H16		15	1	811AS	RNC 3BI	PD30		DFA			3	FORMED PER ED-3F064-37 GR 25.

SHEET NOTES

1. ORDER THESE CABLES ONLY WHEN J3F011AA-1 IS EQUIPPED IN CAB. POS "4" (4ESS/ACI) AS A "DLN" DIRECT LINK NODE (LIST 12 SPEC.)

SEE PROPRIETARY NOTICE ON SHEET 1
Copyright© 1994 AT&T
Unpublished & Not for Publication
All Rights Reserved

3B INTERFACE CIRCUIT		
	DWG SIZE C2	ISSUE 13
AT&T	T*3F008-11	SHEET A3

PRINTED IN U.S.A.

FIGURE AND/OR OPTION	FUNCT DESIG TERMINAL	TYPE ASOC TYPE	CODE ASOC CODE NET	NET OPT
H1	04-018	TF	CDCP-461A	
		E/W CP	963C	
	000		GRDA	
	001		GRDA	
	003		48RTNA	
	004		48RTNA	
	005		48RTNA	
	006		-48A	
	007		-48A	
	008		-48A	
	011		ORS	
	017		OCPR1	
	018		05A	
	019		05A	
	032		GRDA	
	033		GRDA	
	034		GRDA	
	035		GRDA	
	036		GRDA	
	037		GRDA	
	038		GRDA	
	039		GRDA	
	040		GRDA	
	041		GRDA	
	042		GRDA	
	043		GRDA	
	045		5A	
	046		5A	
	047		5A	
	048		5A	
	049		5A	
	050		5A	
	051		5A	
	052		5A	
	053		5A	
	054		5A	
	055		5A	
	056		5A	
	100		GRDA	
	101		GRDA	
	102		48RTNA	
	103		48RTNA	
	104		48RTNA	
	104		48RTNA	
	106		-48A	
	107		-48A	
	108		-48A	
	110		ORS	
	119		48RTNA	
	117		OCPR2	
	118		5A	
	119		GRDA	
	132		GRDA	
	139		GRDA	
	134		GRDA	
	135		GRDA	
	136		GRDA	
	137		GRDA	
	138		GRDA	
	139		GRDA	
	140		GRDA	
	141		GRDA	
	142		GRDA	
	143		GRDA	
	145		5A	
	146		5A	
	147		5A	
	148		5A	
	149		5A	
	150		5A	
	151		5A	
	152		5A	
	153		5A	
	154		5A	
	155		5A	
	156		5A	
	200		GRDA	
	201		GRDA	
	203		48RTNA	
	204		48RTNA	
	205		48RTNA	
	206		-48A	
	207		-48A	
	208		-48A	
	232		GRDA	
	233		GRDA	
	234		GRDA	
	235		GRDA	
	236		GRDA	
	237		GRDA	
	238		GRDA	
	239		GRDA	
	240		GRDA	
	241		GRDA	
	242		GRDA	
	243		GRDA	
	245		5A	
	246		5A	
	247		5A	
	248		5A	
	249		5A	
	250		5A	
	251		5A	
	252		5A	
	253		5A	
	254		5A	
	255		5A	
	256		5A	
	300		GRDA	
	301		GRDA	
	303		48RTNA	
	304		48RTNA	
	305		48RTNA	
	306		-48A	
	307		-48A	
	308		-48A	
	332		GRDA	
04-018	CONTINUED			

FIGURE AND/OR OPTION	FUNCT DESIG TERMINAL	TYPE ASOC TYPE	CODE ASOC CODE NET	NET OPT
	04-018	CONTINUED		
	333		GRDA	
	334		GRDA	
	335		GRDA	
	336		GRDA	
	337		GRDA	
	338		GRDA	
	339		GRDA	
	340		GRDA	
	341		GRDA	
	342		GRDA	
	343		GRDA	
	345		5A	
	346		5A	
	347		5A	
	348		5A	
	349		5A	
	350		5A	
	351		5A	
	352		5A	
	353		5A	
	354		5A	
	355		5A	
	356		5A	
H1	04-026	TF	CDCP-461A	
		E/W CP	963C	
	000		5A	
	001		5A	
	002		OCPR1	
	012		GRDA	
	024		5A	
	032		5A	
	033		ORG13	
	034		OD7RQ	
	035		ORG12	
	036		OD5RQ	
	037		OD3RQ	
	038		ORG10	
	039		OD1RQ	
	040		ORG09	
	041		OD1RQ	
	042		ORGD7	
	043		OIIFBI	
	044		GRDA	
	045		OPRSTI	
	056		5A	
	101		GRDA	
	102		GRDA	
	112		GRDA	
	114		GRDA	
	115		GRDA	
	124		5A	
	132		5A	
	134		ODCRQ	
	135		OD6RQ	
	136		OD4RQ	
	137		ORG11	
	138		OD2RQ	
	139		ODPRQ	
	140		ODORQ	
	141		ORG0B	
	142		ODARQ	
	143		OPIFBQ	
	144		GRDA	
	145		OIMRQ	
	156		5A	
	200		GRDA	
	201		OCPR2	
	212		GRDA	
	224		GRDA	
	232		GRDA	
	249		UIPRES	
	244		GRDA	
	246		ORG06	
	247		OD7RI	
	248		ORG05	
	249		OD5RI	
	250		OD3RI	
	251		ORG03	
	252		OD1RI	
	253		ORG02	
	254		ODTRI	
	255		ORG00	
	256		GRDA	
	300		GRDA	
	301		GRDA	
	302		GRDA	
	312		GRDA	
	314		GRDA	
	315		GRDA	
	324		GRDA	
	332		GRDA	
	344		GRDA	
	347		ODCRI	
	348		OD6RI	
	349		OD4RI	
	350		ORGD4	
	351		OD2RI	
	352		ODPRI	
	353		ODORI	
	354		ORG01	
	355		ODARI	
	356		GRDA	
H1	04-034	TF	CDCP-461A	
		E/W CP	963C	
	000		5A	
	001		5A	
	002		OCPRI	
	003		0A4	
	004		0A8	
	005		0A12	
	006		0A16	
	007		0BHE	
	008		0D0	
	009		0D4	
04-034	CONTINUED			

FIGURE AND/OR OPTION	FUNCT DESIG TERMINAL	TYPE ASOC TYPE	CODE ASOC CODE NET	NET OPT
	04-034	CONTINUED		
	010		0D8	
	011		0D12	
	012		0NG8	
	013		0NG6	
	014		0NG5	
	015		0NG4	
	016		0IRQ1	
	017		0IRQ3	
	018		0IRQ5	
	019		0XINT1	
	020		0QUARA	
	021		XRSTO	
	022		XRST1	
	024		5A	
	032		5A	
	044		GRDA	
	056		5A	
	102		0A1	
	103		0A5	
	104		0A9	
	105		0A13	
	106		0A17	
	107		0DPL	
	108		0D1	
	109		0D5	
	110		0D9	
	111		0D13	
	112		GRDA	
	113		OPEN	
	114		0WR	
	115		0DCLK	
	116		0IRQ2	
	117		0IRQ4	
	118		0XINT0	
	119		5A	
	124		5A	
	132		GRDA	
	141		GRDA	
	142		GRDA	
	144		GRDA	
	150		GRDA	
	154		GRDA	
	156		5A	
	200		GRDA	
	201		OCPR2	
	202		0A2	
	203		0A6	
	204		0A10	
	205		0A14	
	206		0A18	
	207		0DPH	
	208		0D2	
	209		0D6	
	210		0D10	
	211		0D14	
	212		0NG3	
	213		0NG2	
	214		0NG1	
	215		0NGO	
	216		0MI0	
	217		0EOP	
	218		0DRQD	
	219		0DRQ1	
	220		0DRQ2	
	221		0DRQ3	
	223		0STW	
	224		GRDA	
	232		GRDA	
	233		GRDA	
	235		GRDA	
	238		GRDA	
	240		GRDA	
	244		GRDA	
	246		GRDA	
	248		GRDA	
	251		GRDA	
	253		GRDA	
	255		GRDA	
	256		GRDA	
	300		GRDA	
	301		0A0	
	302		0A4	
	303		0A7	
	304		0A11	
	305		0A15	
	306		0A19	
	307		0NG7	
	308		0D3	
	309		0D7	
	310		0D11	
	311		0D15	
	312		0RDIS	
	313		0WAIT	
	314		ORD	
	315		0CCLK	
	316		ORW	
	317		0NPPF	
	318		0DAK0	
	319		0DAK1	
	320		0DAK2	
	321		0DAK3	
	322		DRESET	
	323		0SANE	
	324		GRDA	
	332		GRDA	
	344		GRDA	
	356		GRDA	
H1	04-050	TF	CDCP-461A	
		E/W CP	963C	
	000		5A	
	001		5A	
	002		OCPRI	
	003		0A4	
	004		0A8	
	005		0A12	
	006		0A16	
04-050	CONTINUED			

FIGURE AND/OR OPTION	FUNCT DESIG TERMINAL	TYPE ASOC TYPE	CODE ASOC CODE NET	NET OPT
	04-034	CONTINUED		
	343		0ID9	
	344		GRDA	
	346		0TQ1	
	347		0TQ1	
	356		GRDA	
H1	04-042	TF	CDCP-461A	
		E/W CP	963C	
	000		5A	
	001		5A	
	002		OCPRI	
	003		0A4	
	004		0A8	
	005		0A12	
	006		0A16	
	007		0BHE	
	008		0D0	
	009		0D4	
	010		0D8	
	011		0D12	
	012		0NG8	
	013		0NG6	
	014		0NG5	
	015		0NG4	
	017		0IRQ5	
	021		XRSTI	
	024		5A	
	032		5A	
	044		GRDA	
	044		GRDTIE	
	056		5A	
	102		0A1	
	103		0A5	
	104		0A9	
	105		0A13	
	106		0A17	
	107		0DPL	
	108		0D1	
	109		0D5	
	110		0D9	
	111		0D13	
	112		GRDA	
	113		OPEN	
	114		0WR	
	115		0DCLK	
	117		0IRQ4	
	119		0XINT1	
	124		5A	
	132		5A	
	144		GRDA	
	156		5A	
	200		GRDA	
	201		0CPR2	
	202		0A2	
	203		0A6	
	204		0A10	
	205		0A14	
	206		0A18	
	207		0DPH	
	208		0D2	
	209		0D6	
	210		0D10	
	211		0D14	
	212		0NG3	
	213		0NG2	
	214		0NG1	
	215		0NGO	
	216		0MI0	
	217		0EOP	
	218		0DRQ0	
	219		0DRQ1	
	220		0DRQ2	
	221		0DRQ3	
	223		0STW	
	224		GRDA	
	232		GRDA	
	244		GRDA	
	256		GRDA	
	300		GRDA	
	301		0A0	
	302		0A4	
	303		0A7	
	304		0A11	
	305		0A15	
	306		0A19	
	307		0NG7	
	308		0D3	
	309		0D7	
	310		0D11	
	311		0D15	
	312		0RDIS	
	313		0WAIT	
	314		ORD	
	315		0CCLK	
	316		ORW	
	317		0NPPF	
	318		0DAK0	
	319		0DAK1	
	320		0DAK2	
	321		0DAK3	
	322		DRESET	
	323		0SANE	
	324		GRDA	
	332		GRDA	
	344		GRDA	
	356		GRDA	
H1	04-058	TF	CDCP-661A	
		E/W CP	963L	
	000		5A	
	001		5A	
	003		0A4	
	004		0A8	
	005		0A12	
	006		0A16	
	007		0BHE	
	008		0D0	
	009		0D4	
	010		0D8	
	011		0D12	
	012		0NG8	
	013		0NG6	
04-058	CONTINUED			

FIGURE AND/OR OPTION	FUNCT DESIG TERMINAL	TYPE ASOC TYPE	CODE ASOC CODE NET	NET OPT
	04-050	CONTINUED		
	007		0BHE	
	008		0D0	
	009		0D4	
	010		0D8	
	011		0D12	
	012		0NG8	
	013		0NG6	
	014		0NG5	
	015		0NG4	
	017		0IRQ3	
	020		0QUARA	
	021		XRSTO	
	024		5A	
	032		5A	
	044		GRDA	
	056		5A	
	102		0A1	
	103		0A5	
	104		0A9	
	105		0A13	
	106		0A17	
	107		0DPL	
	108		0D1	
	109		0D5	
	110		0D9	
	111		0D13	
	112		GRDA	
	113		OPEN	
	114		0WR	
	115		0DCLK	
	117		0IRQ2	
	119		0XINT0	
	124		5A	
	132		5A	
	144		GRDA	
	156		5A	
	200		GRDA	
	201		0CPR2	
	202		0A2	
	203		0A6	
	204		0A10	
	205		0A14	
	206		0A18	
	207		0DPH	
	208		0D2	
	209		0D6	
	210		0D10	
	211		0D14	
	212		0NG3	
	213		0NG2	
	214		0NG1	
	215		0NGO	
	216		0MI0	
	217		0EOP	
	218		0DRQ0	
	219		0DRQ1	
	220		0DRQ2	
	221		0DRQ3	
	223		0STW	
	224		GRDA	
	232		GRDA	
	244		GRDA	
	256		GRDA	
	300		GRDA	
	301		0A0	
	302		0A4	
	303		0A7	
	304		0A11	
	305		0A15	
	306		0A19	
	307		0NG7	
	308		0D3	
	309		0D7	
	310		0D11	
	311		0D15	
	312		0RDIS	
	313		0WAIT	
	314		ORD	
	315		0CCLK	
	316		ORW	
	317		0NPPF	
	318		0DAK0	
	319		0DAK1	
	320		0DAK2	
	321		0DAK3	
	322		DRESET	
	323		0SANE	
	324		GRDA	
	332		GRDA	
	344		GRDA	
	356		GRDA	

WESTERN ELECTRIC CO., INC. PRINTED IN USA		DWG SIZE C2
T*3F008-11	SHEET B1	ISSUE 3

FIGURE AND/OR OPTION	FUNCT DESIG TERMINAL	TYPE ASOC TYPE	CODE ASOC CODE NET	NET OPT
04-058	CONTINUED			
	014		ONG5	
	015		ONG4	
	016		OIRQ1	
	018		OQUARA	
	019		OID0	
	020		OID2	
	021		OID4	
	022		OID6	
	023		OID8	
	024		5A	
	032		5A	
	033		GRDB	
	035		GRDB	
	038		GRDB	
	040		GRDB	
	042		GRDB	
	043		OIIFBI	
	044		GRDB	
	046		ORGD6	
	047		OD7RI	
	048		ORGD5	
	049		OD5RI	
	050		OD3RI	
	051		ORGD3	
	052		OD1RI	
	053		ORGD2	
	054		ODTRI	
	055		ORGD0	
	056		5A	
	102		OAI	
	103		OA5	
	104		OA9	
	105		OAI3	
	106		OAI7	
	107		ODPL	
	108		OD1	
	109		OD5	
	110		OD9	
	111		OD13	
	112		GRDB	
	113		OPEN	
	114		OWR	
	115		ODCLK	
	116		OIRQ0	
	119		OID1	
	120		OID3	
	121		OID5	
	122		OID7	
	123		OID9	
	124		5A	
	129		5A	
	132		OPIFB0	
	133		GRDB	
	134		GRDB	
	135		OIRQ0	
	137		GRDB	
	141		GRDB	
	143		OPIFB0	
	144		GRDB	
	147		ODCR1	
	148		OD6R1	
	149		OD4R1	
	150		ORGD4	
	151		OD2R1	
	152		ODPR1	
	153		ODDR1	
	154		ORGD1	
	155		ODAR1	
	156		5A	
	202		OA2	
	203		OA6	
	204		OA10	
	205		OA14	
	206		OA18	
	207		ODPH	
	208		OD2	
	209		OD6	
	210		OD10	
	211		OD14	
	212		ONG3	
	213		ONG2	
	214		ONG1	
	215		ONG0	
	216		OMI0	
	217		OEOP	
	218		ODRQ0	
	219		ODRQ1	
	220		ODRQ2	
	221		ODRQ3	
	222		OMPN	
	223		OSTW	
	224		5A	
	232		5A	
	233		ORGI3	
	234		OD7RD	
	235		ORGI2	
	236		OD5RD	
	237		OD3RD	
	238		ORGI0	
	239		OD1RD	
	240		ORGD9	
	241		ODTRD	
	242		ORGD7	
	243		OIPRES	
	244		GRDB	
	246		IRG06	
	247		ID7RI	
	248		IRG05	
	249		OD5RI	
	250		ID3RI	
	251		IRG03	
	252		IDIRI	
	253		IRG02	
	254		IDTRI	
	255		IRG00	
	256		5A	
	900		GRDB	
	901		OA0	
	902		OA3	
04-058	CONTINUED			

FIGURE AND/OR OPTION	FUNCT DESIG TERMINAL	TYPE ASOC TYPE	CODE ASOC CODE NET	NET OPT
04-058	CONTINUED			
	903		OA7	
	904		OAII	
	905		OAI5	
	906		OAI9	
	907		ONG7	
	908		OD3	
	909		OD7	
	910		ODII	
	911		OD15	
	912		ORDIS	
	913		OWAIT	
	914		ORD	
	915		OCCLK	
	916		ORW	
	917		ONPPF	
	918		ODAK0	
	919		ODAK1	
	920		ODAK2	
	921		ODAK3	
	922		ORESET	
	923		OSANE	
	924		GRDB	
	932		GRDB	
	933		OPRSTI	
	934		OCRD	
	935		OD6RD	
	936		OD4RD	
	937		ORGI1	
	938		OD2RD	
	939		ODPRD	
	940		ODDRD	
	941		ODARD	
	942		ODCI	
	943		GRDB	
	944		GRDB	
	945		OCQ	
	947		IDCRI	
	948		ID6RI	
	949		ID4RI	
	950		IRG04	
	951		ID2RI	
	952		IDPRI	
	953		IDDRI	
	954		IRG01	
	955		IDARI	
	956		GRDB	
	400		GRDB	
	401		OSPI	
	402		OCLRERRO	
	403		OCBLKO	
	404		OPWRTO	
	405		OINACTO	
	406		OSP2	
	407		ORDIPO	
	408		OQUAR	
	409		ORACRSTO	
	410		OFREADBO	
	411		ONPRESETO	
	412		ODTODI	
	413		OSP4	
	414		GRDB	
	415		OBLKDS1	
	416		OBLKD1	
	417		OFPROPBO	
	418		OBLKTOO	
	419		GRDB	
	420		ONCRDY1	
	421		OSMIB	
	422		ORDFULL	
	423		ONCRDYO	
	424		GRDB	
	432		GRDB	
	433		OWREMPTY	
	434		ODTIRO	
	435		OSP3	
	436		ORDIHBTO	
	437		OUNCKO	
	438		OTWRQO	
	439		ORDTOO	
	440		ODTIRI	
	441		OPWRESET	
	442		OSISOLO	
	443		OCISOLO	
	444		OSQUARO	
	445		ODIL4	
	446		ODIL3	
	447		GRDB	
	448		ODIL2	
	449		ODIL1	
	450		ODIL0	
	451		ODDCI	
	452		ODDPI	
	453		ODD7I	
	454		ODD6I	
	455		ODD5I	
	456		GRDB	
	500		GRDB	
	501		GRDB	
	502		OCPRI	
	503		OCPR2	
	504		OTWRTO	
	505		OINACTI	
	506		OTOKDAO	
	507		ORDIPI	
	508		OTPI	
	509		OIHBTIBO	
	510		ODAORI	
	511		ODADDI	
	512		ORDTC	
	513		OPRERSTO	
	514		ORRSTSI	
	515		ORACRSTI	
	516		ODMARDTO	
	517		ODREQWRI	
	518		OISOLO	
	519		OCRDYI	
	520		OCRDYO	
04-058	CONTINUED			

FIGURE AND/OR OPTION	FUNCT DESIG TERMINAL	TYPE ASOC TYPE	CODE ASOC CODE NET	NET OPT
04-058	CONTINUED			
	521		OSBCASTB	
	522		ODAIDB	
	523		OCRDYO	
	524		GRDB	
	532		GRDB	
	533		ODTIDI	
	534		ODAORO	
	535		OWRABEND	
	536		ORGCMDO	
	537		ORINGSMO	
	538		OPWRQO	
	539		OWRSMERR	
	540		OCIERRO	
	541		OORPHBYT	
	542		OTOOSHRT	
	543		OBLKO	
	544		OPTYERRO	
	545		OCLRQUAR	
	546		ODILP	
	547		ODIL7	
	548		ODIL6	
	549		ODIL5	
	550		GRDB	
	551		OD04I	
	552		OD03I	
	553		OD02I	
	554		OD01I	
	555		OD00I	
	556		GRDB	
H1	04-068	TF	CDCP-661A	
	E/W CP	969L		
	000		5A	
	001		5A	
	003		OA4	
	004		OA8	
	005		OA12	
	006		OA16	
	007		OBHE	
	008		OD0	
	009		OD4	
	010		OD8	
	011		OD12	
	012		ONG8	
	013		ONG6	
	014		ONG5	
	015		ONG4	
	016		OIRQ1	
	018		OQUARA	
	019		OID0	
	020		OID2	
	021		OID4	
	022		OID6	
	023		OID8	
	024		5A	
	032		5A	
	044		GRDB	
	054		ODTRI	
	055		ORGD0	
	056		5A	
	102		OAI	
	103		OA5	
	104		OA9	
	105		OAI3	
	106		OAI7	
	107		ODPL	
	108		OD1	
	109		OD5	
	110		OD9	
	111		OD13	
	112		GRDB	
	113		OPEN	
	114		OWR	
	115		ODCLK	
	116		OIRQ0	
	119		OID1	
	120		OID3	
	121		OID5	
	122		OID7	
	123		OID9	
	124		5A	
	132		5A	
	143		OPIFB0	
	144		GRDB	
	154		ORGD1	
	155		ODAR1	
	156		5A	
	202		OA2	
	203		OA6	
	204		OA10	
	205		OA14	
	206		OA18	
	207		ODPH	
	208		OD2	
	209		OD6	
	210		OD10	
	211		OD14	
	212		ONG3	
	213		ONG2	
	214		ONG1	
	215		ONG0	
	216		OMI0	
	217		OEOP	
	218		ODRQ0	
	219		ODRQ1	
	220		ODRQ2	
	221		ODRQ3	
	222		OMPN	
	223		OSTW	
	224		5A	
	232		5A	
	243		OIPRES	
	244		GRDB	
	246		IRG06	
	247		ID7RI	
	248		IRG05	
04-068	CONTINUED			

FIGURE AND/OR OPTION	FUNCT DESIG TERMINAL	TYPE ASOC TYPE	CODE ASOC CODE NET	NET OPT
04-068	CONTINUED			
	249		ID5RI	
	250		ID3RI	
	251		IRG03	
	252		IDIRI	
	253		IRG02	
	254		IDTRI	
	255		IRG00	
	256		5A	
	900		GRDB	
	901		OA0	
	902		OA3	
	903		OA7	
	904		OAII	
	905		OAI5	
	906		OAI9	
	907		ONG7	
	908		OD3	
	909		OD7	
	910		ODII	
	911		OD15	
	912		ORDIS	
	913		OWAIT	
	914		ORD	
	915		OCCLK	
	916		ORW	
	917		ONPPF	
	918		ODAK0	
	919		ODAK1	
	920		ODAK2	
	921		ODAK3	
	922		ORESET	
	923		OSANE	
	924		GRDB	
	932		GRDB	
	933		OPRSTI	
	943		OCI	
	944		GRDB	
	945		OCQ	
	947		IDCRI	
	948		ID6RI	
	949		ID4RI	
	950		IRG04	
	951		ID2RI	
	952		IDPRI	
	953		IDDRI	
	954		IRG01	
	955		IDARI	
	956		GRDB	
	400		GRDB	
	401		OSPI	
	402		OCLRERRO	
	403		OCBLKO	
	404		OPWRTO	
	405		OINACTO	
	406		OSP2	
	407		ORDIPO	
	408		OQUAR	
	409		ORACRSTO	
	410		OFREADBO	
	411		ONPRESETO	
	412		ODTODI	
	413		OSP4	
	414		GRDB	
	415		OBLKDS1	
	416		OBLKD1	
	417		OFPROPBO	
	418		OBLKTOO	
	419		GRDB	
	420		ONCRDY1	
	421		OSMIB	
	422		ORDFULL	
	423		ONCRDYO	
	424		GRDB	
	432		GRDB	
	433		OWREMPTY	
	434		ODTIRO	
	435		OSP3	
	436		ORDIHBTO	
	437		OUNCKO	
	438		OTWRQO	
	439		ORDTOO	
	440		ODTIRI	
	441		OPWRESET	
	442		OSISOLO	
	443		OCISOLO	
	444		OSQUARO	
	445		ODIL4	
	446		ODIL3	
	447		GRDB	
	448		ODIL2	
	449		ODIL1	
	450		ODIL0	
	451		ODDCI	
	452		ODDPI	
	453		ODD7I	
	454		ODD6I	
	455		ODD5I	
	456		GRDB	
	500		GRDB	
	501		GRDB	
	502		OCPRI	
	503		OCPR2	
	504		OTWRTO	
	505		OINACTI	
	506		OTOKDAO	
	507		ORDIPI	
	508		OTPI	
	509		OIHBTIBO	
	510		ODAORI	
	511		ODADDI	
	512		ORDTC	
	513		OPRERSTO	
	514		ORRSTSI	
	515		ORACRSTI	
	516		ODMARDTO	
	517		ODREQWRI	
	518		OISOLO	
04-068	CONTINUED			

FIGURE AND/OR OPTION	FUNCT DESIG TERMINAL	TYPE ASOC TYPE	CODE ASOC CODE NET	NET OPT
04-068	CONTINUED			
	519		OISOLB	
	520		OCRDYI	
	521		OSBCASTB	
	522		ODAIDB	
	523		OCRDYO	
	524		GRDB	
	532		GRDB	
	533		ODTIDI	
	534		ODAORO	
	535		OWRABEND	
	536		ORGCNDO	
	537		ORINGSMO	
	538		OPWRQO	
	539		OWRSNERR	
	540		OCIERRO	
	541		OORPHBYT	
	542		OTOOSHRT	
	543		OBLKO	
	544		OPTYERRO	
	545		OCLRQUAR	
	546		ODILP	
	547		ODIL7	
	548		ODIL6	
	549		ODIL5	
	550		GRDB	
	551		OD04I	
	552		OD03I	
	553		OD02I	
	554		OD01I	
	555		OD00I	
	556		GRD9	
H1	04-078	TF	CDCP-461A	
	E/W CP	969C		
	000		5A	
	001		5A	
	002		OCPRI	
	003		OA4	
	004		OA8	
	005		OA12	
	006		OA16	
	007		OBHE	
	008		OD0	
	009		OD4	
	010		OD8	
	011		OD12	
	012		ONG8	
	013		ONG6	
	014		ONG5	
	015		ONG4	
	017		OIRQ3	
	019		EOT	
	020		BR	
	021		ERR	
	022		XFER	
	023		SETUP	
	024		5A	
	032		5A	
	035		INF1	
	037		INF3	
	039		INF5	
	041		INF7	
	047		INF17	
	049		INF19	
	051		INF21	
	053		INF23	
	056		5A	
	102		OAI	
	103		OA5	
	104		OA9	
	105		OAI3	
	106		OAI7	
	107		ODPL	
	108		OD1	
	109		OD5	
	110		OD9	
	111		OD13	
	112		GRDB	
	113		OPEN	
	114		OWR	
	115		ODCLK	
	117		OIRQ2	
	119		SST	
	120		CP	
	121		DP	
	122		SYNC	
	129		INT	
	124		5A	
	132		5A	
	134		INF0	
	135		GRDB	
	136		INF2	
	137		GRDB	
	138		INF4	
	139		GRDB	
	140		INF6	
	141		GRDB	
	142		INFP3	
	143		GRDB	
	144		GRDB	
	145		GRDB	
	146		INF16	
	147		GRDB	
	148		INF18	
	149		GRDB	
	150		INF20	
	151		GRDB	
04-078	CONTINUED			

WESTERN ELECTRIC CO., INC. PRINTED IN USA	DWG SIZE
	C2
T*3F008-11	SHEET B2 / ISSUE 3

FIGURE AND/OR OPTION	FUNCT DESIG TERMINAL	TYPE ASOC TYPE	CODE ASOC CODE NET	NET OPT
04-078	CONTINUED			
	152	INF22		
	153	GRDB		
	154	INFP1		
	155	GRDB		
	156	5A		
	200	GRDB		
	201	OCPR2		
	202	OA2		
	203	OA6		
	204	OA10		
	205	OA14		
	206	OA18		
	207	ODPH		
	208	OD2		
	209	OD6		
	210	OD10		
	211	OD14		
	212	ONG3		
	213	ONG2		
	214	ONG1		
	215	ONGO		
	216	OMIO		
	217	OEOP		
	218	ODRQO		
	219	ODRQ1		
	220	ODRQ2		
	221	ODRQ3		
	223	OSTW		
	224	GRDB		
	232	GRDB		
	294	GRDB		
	295	INF9		
	296	GRDB		
	297	INF11		
	298	GRDB		
	299	INF13		
	240	GRDB		
	241	INF15		
	242	GRDB		
	244	GRDB		
	246	GRDB		
	247	INF25		
	248	GRDB		
	249	INF27		
	250	GRDB		
	251	INF29		
	252	GRDB		
	253	INF31		
	254	GRDB		
	256	GRDB		
	900	GRDB		
	901	OAO		
	902	OA3		
	903	OA7		
	904	OA11		
	905	OA15		
	906	OA19		
	907	ONG7		
	908	OD3		
	909	OD7		
	910	OD11		
	911	OD15		
	912	ORDIS		
	913	OWAIT		
	914	ORD		
	915	OCCLK		
	916	ORW		
	917	ONPPF		
	918	ODAKO		
	919	ODAK1		
	920	ODAK2		
	921	ODAK3		
	922	ORESET		
	923	OSANE		
	924	GRDB		
	932	GRDB		
	934	INF8		
	936	INF10		
	938	INF12		
	940	INF14		
	942	INFP2		
	943	OCI		
	945	OCQ		
	946	INF24		
	948	INF26		
	950	INF28		
	952	INF30		
	954	INFP0		
	956	GRDB		

HI 04-086 TF CDCP-461A
E/W CP 963C

000	5A	
001	5A	
019	DR	
020	ERR	
021	XFER	
022	SETUP	
023	OCPR2	
024	OCPR1	
032	5A	
035	INF1	
037	INF3	
039	INF5	
041	INF7	
047	INF17	
049	INF19	
051	INF21	
053	INF23	
101	GRDB	
109	GRDB	
111	GRDB	
113	GRDB	
115	5A	
117	GRDB	
118	EOT	
04-086	CONTINUED	

FIGURE AND/OR OPTION	FUNCT DESIG TERMINAL	TYPE ASOC TYPE	CODE ASOC CODE NET	NET OPT
04-086	CONTINUED			
	119	GRDB		
	121	GRDB		
	124	5A		
	132	5A		
	134	INFO		
	135	GRDB		
	136	INF2		
	137	GRDB		
	138	INF4		
	139	GRDB		
	140	INF6		
	141	GRDB		
	142	INFP3		
	143	GRDB		
	144	GRDB		
	145	GRDB		
	146	INF16		
	147	GRDB		
	148	INF18		
	149	GRDB		
	150	INF20		
	151	GRDB		
	152	INF22		
	153	GRDB		
	154	INFP1		
	155	GRDB		
	156	5A		
	200	GRDB		
	202	GRDB		
	204	GRDB		
	206	GRDB		
	212	GRDB		
	214	GRDB		
	216	GRDB		
	218	GRDB		
	219	DP		
	220	GRDB		
	221	SYNC		
	222	GRDB		
	224	GRDB		
	232	GRDB		
	234	GRDB		
	235	INF9		
	236	GRDB		
	237	INF11		
	238	GRDB		
	239	INF13		
	240	GRDB		
	241	INF15		
	242	GRDB		
	244	GRDB		
	246	GRDB		
	247	INF25		
	248	GRDB		
	249	INF27		
	250	GRDB		
	251	INF29		
	252	GRDB		
	253	INF31		
	254	GRDB		
	311	GRDB		
	318	SST		
	319	CP		
	321	INT		
	324	GRDB		
	332	GRDB		
	334	INF8		
	336	INF10		
	338	INF12		
	340	INF14		
	342	INFP2		
	344	INF24		
	346	INF26		
	348	INF28		
	350	INF30		
	352	INFP0		
	354	GRDB		
	356	GRDTIE		

HI 04-118 TF CDCP-461A
E/W CP 963C

000	5B	
001	5B	
002	ICPR1	
003	2A4	
004	2A8	
005	2A12	
006	2A16	
007	2BHE	
008	2D0	
009	2D4	
010	2D8	
011	2D12	
012	2NG8	
013	2NG6	
014	2NG5	
015	2NG4	
016	2IRQ1	
017	2IRQ3	
018	2IRQ5	
019	1XINT1	
020	2QUARA	
021	2XRSTO	
022	2XRST1	
024	5B	
032	5B	
044	GRDC	
056	5B	
102	2A1	
103	2A5	
104	2A9	
105	2A13	
106	2A17	
107	2DPL	
108	2D1	
109	2D5	
110	2D9	
111	2D13	
112	GRDC	
113	2PEN	
114	2WR	
115	2DCLK	
116	2IRQ0	
117	2IRQ2	
118	2IRQ4	
119	1XINT0	
124	5B	
132	5B	
137	GRDC	
141	GRDC	
142	GRDC	
144	GRDC	
150	GRDC	
154	GRDC	
156	5B	
200	GRDC	
201	ICPR2	
202	2A2	
203	2A6	
204	2A10	
205	2A14	
206	2A18	
207	2DPH	
208	2D2	
209	2D6	
210	2D10	
211	2D14	
212	2NG3	
213	2NG2	
214	2NG1	
215	2NGO	
216	2MIO	
217	2EOP	
218	2DRQO	
219	2DRQ1	
220	2DRQ2	
221	2DRQ3	
223	2STW	
224	GRDC	
232	GRDC	
233	GRDC	
235	GRDC	
236	GRDC	
238	GRDC	
240	GRDC	
244	GRDC	
246	GRDC	
248	GRDC	
251	GRDC	
253	GRDC	
255	GRDC	
256	GRDC	
900	GRDC	
901	2AO	
902	2A3	
903	2A7	
904	2A11	
905	2A15	
906	2A19	
907	2NG7	
908	2D3	
909	2D7	
910	2D11	
911	2D15	
912	2RDIS	
913	2WAIT	
914	2RD	
915	2CCLK	
916	2RW	
917	2NPPF	
918	2DAKO	
919	2DAK1	
920	2DAK2	
921	2DAK3	
922	2RESET	
923	2SANE	
924	GRDC	
932	GRDC	
933	GRDC	
934	2MPN	
935	2IDO	
936	2ID1	
937	2ID2	
938	2ID3	
939	2ID4	
940	2ID5	
941	2ID6	
942	2ID7	
943	2ID8	
944	2ID9	
945	GRDC	
946	2TD1	
947	2TD0	
956	GRDC	

HI 04-126 TF CDCP-461A
E/W CP 963C

000	5B	
001	5B	
002	ICPR1	
003	2A4	
004	2A8	
005	2A12	
006	2A16	
007	2BHE	
008	2D0	
009	2D4	
010	2D8	
011	2D12	
012	2NG8	
013	2NG6	
014	2NG5	
015	2NG4	
016	2IRQ1	
017	2IRQ3	
018	2IRQ5	
019	1XINT1	
020	2QUARA	
021	2XRSTO	
022	2XRST1	
024	5B	
032	5B	
044	GRDC	
056	5B	
102	2A1	
103	2A5	
104	2A9	
105	2A13	
106	2A17	
107	2DPL	
108	2D1	
109	2D5	
110	2D9	
111	2D13	
04-126	CONTINUED	

FIGURE AND/OR OPTION	FUNCT DESIG TERMINAL	TYPE ASOC TYPE	CODE ASOC CODE NET	NET OPT
04-126	CONTINUED			
	021	2XRST1		
	024	5B		
	032	5B		
	044	GRDC		
	056	5B		
	102	2A1		
	103	2A5		
	104	2A9		
	105	2A13		
	106	2A17		
	107	2DPL		
	108	2D1		
	109	2D5		
	110	2D9		
	111	2D13		
	112	GRDC		
	113	2PEN		
	114	2WR		
	115	2DCLK		
	117	2IRQ4		
	119	1XINT1		
	124	5B		
	132	5B		
	144	GRDC		
	156	5B		
	200	GRDC		
	201	ICPR2		
	202	2A2		
	203	2A6		
	204	2A10		
	205	2A14		
	206	2A18		
	207	2DPH		
	208	2D2		
	209	2D6		
	210	2D10		
	211	2D14		
	212	2NG3		
	213	2NG2		
	214	2NG1		
	215	2NGO		
	216	2MIO		
	217	2EOP		
	218	2DRQO		
	219	2DRQ1		
	220	2DRQ2		
	221	2DRQ3		
	223	2STW		
	224	GRDC		
	232	GRDC		
	244	GRDC		
	256	GRDC		
	300	GRDC		
	301	2AO		
	302	2A3		
	303	2A7		
	304	2A11		
	305	2A15		
	306	2A19		
	307	2NG7		
	308	2D3		
	309	2D7		
	310	2D11		
	311	2D15		
	312	2RDIS		
	313	2WAIT		
	314	2RD		
	315	2CCLK		
	316	2RW		
	317	2NPPF		
	318	2DAKO		
	319	2DAK1		
	320	2DAK2		
	321	2DAK3		
	322	2RESET		
	323	2SANE		
	324	GRDC		
	332	GRDC		
	344	GRDC		
	356	GRDC		

HI 04-142 TF CDCP-661A
E/W CP 969L

000	5B	
001	5B	
003	2A4	
004	2A8	
005	2A12	
006	2A16	
007	2BHE	
008	2D0	
009	2D4	
010	2D8	
011	2D12	
012	2NG8	
013	2NG6	
014	2NG5	
015	2NG4	
016	2IRQ1	
018	2QUARA	
019	2ID0	
020	2ID2	
021	2ID4	
022	2ID6	
023	2ID8	
024	5B	
032	5B	
033	2RG13	
034	2D7RQ	
035	2RG12	
036	2D5RQ	
037	2D3RQ	
038	2RG10	
039	2D1RQ	
040	2RG09	
041	2DTRQ	
042	2RG07	
043	GRDC	
045	IIFBI	
046	GRDC	
048	GRDC	
04-142	CONTINUED	

WESTERN ELECTRIC CO., INC. PRINTED IN USA			DWG SIZE C2
T*3F008-11		SHEET B3	ISSUE 3

FIGURE AND/OR OPTION	FUNCT DESIG TERMINAL	TYPE ASOC TYPE	CODE ASOC CODE NET	NET OPT
04-142	CONTINUED			
	051	GRDC		
	053	GRDC		
	054	3DTR1		
	055	2RGDOA		
	056	5B		
	102	2A1		
	103	2A5		
	104	2A9		
	105	2A13		
	106	2A17		
	107	2DPL		
	108	2D1		
	109	2D5		
	110	2D9		
	111	2D13		
	112	GRDC		
	113	2PEN		
	114	2WR		
	115	2DCLK		
	116	2IRQ0		
	119	2ID1		
	120	2ID3		
	121	2ID5		
	122	2ID7		
	123	2ID9		
	124	5B		
	132	5B		
	134	2DCR0		
	136	2D6R0		
	136	2D4R0		
	137	2RG11		
	138	2D2R0		
	139	2DPR0		
	140	2D0R0		
	141	2RG08		
	142	2DA80		
	144	GRDC		
	145	1PIFB0		
	146	1IMR0		
	150	GRDC		
	154	2RGD1A		
	155	2DAR1A		
	156	5B		
	202	2A2		
	203	2A6		
	204	2A10		
	205	2A14		
	206	2A18		
	207	2DPH		
	208	2D2		
	209	2D6		
	210	2D10		
	211	2D14		
	212	2NG3		
	213	2NG2		
	214	2NG1		
	215	2NG0		
	216	2M10		
	217	2E0P		
	218	2DRQ0		
	219	2DRQ1		
	220	2DRQ2		
	221	2DRQ3		
	222	2MPN		
	223	2STW		
	224	5B		
	232	5B		
	233	GRDC		
	235	GRDC		
	237	GRDC		
	240	GRDC		
	242	GRDC		
	244	GRDC		
	245	1IPRES		
	246	2RG06		
	247	2D7R1		
	248	2RG05		
	249	2D5R1		
	250	2D3R1		
	251	2RG03		
	252	2D1R1		
	253	2RG02		
	254	2DTR1		
	255	2RG00		
	256	5B		
	300	GRDC		
	301	2A0		
	302	2A4		
	303	2A8		
	304	2A12		
	305	2A16		
	306	2A19		
	307	2NG7		
	308	2D3		
	309	2D7		
	310	2D11		
	311	2D15		
	312	2RDIR		
	313	2WAIT		
	314	2RD		
	315	2CCLK		
	316	2RW		
	317	2NPPF		
	318	2DAK0		
	319	2DAK1		
	320	2DAK2		
	321	2DAK3		
	322	2RESET		
	323	2SANE		
	324	GRDC		
	332	GRDC		
	337	GRDC		
	341	GRDC		
	343	2CI		
	344	GRDC		
	345	2CQ		
04-142	CONTINUED			

FIGURE AND/OR OPTION	FUNCT DESIG TERMINAL	TYPE ASOC TYPE	CODE ASOC CODE NET	NET OPT
04-142	CONTINUED			
	346	1PRSTI		
	347	2DCR1		
	348	2D6R1		
	349	2D4R1		
	350	2RG04		
	351	2D2R1		
	352	2DPR1		
	353	2D0R1		
	354	2RG01		
	355	2DAR1		
	356	GRDC		
	400	GRDC		
	401	2SP1		
	402	2CLRERR0		
	403	2CBLK0		
	404	2PWRT0		
	405	2INACT0		
	406	2SP2		
	407	2RDIP0		
	408	2QVAR		
	409	2RACRST0		
	410	2FREADB0		
	411	2NPRESET0		
	412	2DTOD1		
	413	2SP4		
	414	GRDC		
	415	2BLKDS1		
	416	2BLKD1		
	417	2FPROPB0		
	418	2BLKT00		
	419	GRDC		
	420	2NCRDY1		
	421	2SMI0		
	422	2RDFULL		
	423	2NCRDY0		
	424	GRDC		
	432	GRDC		
	433	2WREMPTY		
	434	2DTIR0		
	435	2SP3		
	436	2RDIHBT0		
	437	2UNCK0		
	438	2TWRQ0		
	439	2RDT00		
	440	2DTIR1		
	441	2PWRESET		
	442	2SISOL0		
	443	2CISOL0		
	444	2SQUAR0		
	445	2DIL4		
	446	2DIL3		
	447	GRDC		
	448	2DIL2		
	449	2DIL1		
	450	2DIL0		
	451	2D0C1		
	452	2D0P1		
	453	2D071		
	454	2D061		
	455	2D051		
	456	GRDC		
	500	GRDC		
	501	GRDC		
	502	1CPR1		
	503	1CPR2		
	504	2TWRT0		
	505	2INACT1		
	506	2TOKDA0		
	507	2RDIP1		
	509	2TP1		
	510	2IHBTIB0		
	511	2DA0R1		
	512	2DA0D1		
	513	2RDTC		
	514	2PRACRST		
	515	2RRSTS1		
	516	2RACRST1		
	517	2DMARDT0		
	518	2DREQWR1		
	519	2ISOLB		
	520	2CRDY1		
	521	2SBCASTB		
	522	2DAIDB		
	523	2CRDY0		
	524	GRDC		
	532	GRDC		
	533	2DTID1		
	534	2DA0R0		
	535	2WRABEND		
	536	2RNGCMND		
	537	2RINGSM0		
	538	2PWR00		
	539	2WRSNERR		
	540	2CIERR0		
	541	2DRPHBYT		
	542	2T00SHRT		
	543	2BLK0		
	544	2PTYERR0		
	545	2CLRQUAR		
	546	2DILP		
	547	2DIL7		
	548	2DIL6		
	549	2DIL5		
	550	GRDC		
	551	2D041		
	552	2D031		
	553	2D021		
	554	2D011		
	555	2D001		
	556	GRDC		
H1	04-152	TF	CDCP-661A	
		E/W CP	969L	
	000		5B	
	001		5B	
	009		2A4	
04-152	CONTINUED			

FIGURE AND/OR OPTION	FUNCT DESIG TERMINAL	TYPE ASOC TYPE	CODE ASOC CODE NET	NET OPT
04-152	CONTINUED			
	004	2A8		
	005	2A12		
	006	2A16		
	007	2BHE		
	008	2D0		
	009	2D4		
	010	2D8		
	011	2D12		
	012	2NG8		
	013	2NG6		
	014	2NG5		
	015	2NG4		
	016	2IRQ1		
	018	2QUARA		
	019	2ID0		
	020	2ID2		
	021	2ID4		
	022	2ID6		
	023	2ID8		
	024	5B		
	032	5B		
	044	GRDC		
	045	1IIFBI		
	054	3DTR1		
	055	2RGDOA		
	056	5B		
	102	2A1		
	103	2A5		
	104	2A9		
	105	2A13		
	106	2A17		
	107	2DPL		
	108	2D1		
	109	2D5		
	110	2D9		
	111	2D13		
	112	GRDC		
	113	2PEN		
	114	2WR		
	115	2DCLK		
	116	2IRQ0		
	119	2ID1		
	120	2ID3		
	121	2ID5		
	122	2ID7		
	123	2ID9		
	124	5B		
	132	5B		
	144	GRDC		
	145	1PIFB0		
	146	1IMR0		
	154	2RGD1A		
	155	2DAR1A		
	156	5B		
	202	2A2		
	203	2A6		
	204	2A10		
	205	2A14		
	206	2A18		
	207	2DPH		
	208	2D2		
	209	2D6		
	210	2D10		
	211	2D14		
	212	2NG3		
	213	2NG2		
	214	2NG1		
	215	2NG0		
	216	2M10		
	217	2E0P		
	218	2DRQ0		
	219	2DRQ1		
	220	2DRQ2		
	221	2DRQ3		
	222	2MPN		
	223	2STW		
	224	5B		
	232	5B		
	244	GRDC		
	245	1IPRES		
	246	2RG06		
	247	2D7R1		
	248	2RG05		
	249	2D5R1		
	250	2D3R1		
	251	2RG03		
	252	2D1R1		
	253	2RG02		
	254	2DTR1		
	255	2RG00		
	256	5B		
	300	GRDC		
	301	2A0		
	302	2A4		
	303	2A8		
	304	2A11		
	305	2A15		
	306	2A19		
	307	2NG7		
	308	2D3		
	309	2D7		
	310	2D11		
	311	2D15		
	312	2RDIS		
	313	2WAIT		
	314	2RD		
	315	2CCLK		
	316	2RW		
	317	2NPPF		
	318	2DAK0		
	319	2DAK1		
	320	2DAK2		
	321	2DAK3		
	322	2RESET		
	323	2SANE		
	324	GRDC		
04-152	CONTINUED			

FIGURE AND/OR OPTION	FUNCT DESIG TERMINAL	TYPE ASOC TYPE	CODE ASOC CODE NET	NET OPT
04-152	CONTINUED			
	332	GRDC		
	343	2CI		
	344	GRDC		
	345	2CQ		
	346	1PRSTI		
	347	2DCR1		
	348	2D6R1		
	349	2D4R1		
	350	2RG04		
	351	2D2R1		
	352	2DPR1		
	353	2D0R1		
	354	2RG01		
	355	2DAR1		
	356	GRDC		
	400	GRDC		
	401	2SP1		
	402	2CLRERR0		
	403	2CBLK0		
	404	2PWRT0		
	405	2INACT0		
	406	2SP2		
	407	2RDIP0		
	408	2QVAR		
	409	2RACRST0		
	410	2FREADB0		
	411	2NPRESET0		
	412	2DTOD1		
	413	2SP4		
	414	GRDC		
	415	2BLKDS1		
	416	2BLKD1		
	417	2FPROPB0		
	418	2BLKT00		
	419	GRDC		
	420	2NCRDY1		
	421	2SMI0		
	422	2RDFULL		
	423	2NCRDY0		
	424	GRDC		
	432	GRDC		
	433	2WREMPTY		
	434	2DTIR0		
	435	2SP3		
	436	2RDIHBT0		
	437	2UNCK0		
	438	2TWRQ0		
	439	2RDT00		
	440	2DTIR1		
	441	2PWRESET		
	442	2SISOL0		
	443	2CISOL0		
	444	2SQUAR0		
	445	2DIL4		
	446	2DIL3		
	447	GRDC		
	448	2DIL2		
	449	2DIL1		
	450	2DIL0		
	451	2D0C1		
	452	2D0P1		
	453	2D071		
	454	2D061		
	455	2D051		
	456	GRDC		
	500	GRDC		
	501	GRDC		
	502	1CPR1		
	503	1CPR2		
	504	2TWRT0		
	505	2INACT1		
	506	2TOKDA0		
	507	2RDIP1		
	509	2TP1		
	510	2IHBTIB0		
	511	2DA0R1		
	512	2DA0D1		
	513	2RDTC		
	514	2PRACRST		
	515	2RRSTS1		
	516	2RACRST1		
	517	2DMARDT0		
	518	2DREQWR1		
	519	2ISOLB		
	520	2CRDY1		
	521	2SBCASTB		
	522	2DAIDB		
	523	2CRDY0		
	524	GRDC		
	532	GRDC		
	533	2DTID1		
	534	2DA0R0		
	535	2WRABEND		
	536	2RNGCMND		
	537	2RINGSM0		
	538	2PWR00		
	539	2WRSNERR		
	540	2CIERR0		
	541	2DRPHBYT		
	542	2T00SHRT		
	543	2BLK0		
	544	2PTYERR0		
	545	2CLRQUAR		
	546	2DILP		
	547	2DIL7		
	548	2DIL6		
	549	2DIL5		
	550	GRDC		
	551	2D041		
	552	2D031		
	553	2D021		
	554	2D011		
	555	2D001		
	556	GRDC		

FIGURE AND/OR OPTION	FUNCT DESIG TERMINAL	TYPE ASOC TYPE	CODE ASOC CODE NET	NET OPT
H1	04-162	TF	CDCP-461A	
		E/W CP	969C	
	000		5B	
	001		5B	
	002		1CPR1	
	012		GRDC	
	024		5B	
	032		5B	
	033		2RG06	
	034		2D7R1	
	035		2RG05	
	036		2D5R1	
	037		2D3R1	
	038		2RG03	
	039		2D1R1	
	040		2RG02	
	041		2DTR1	
	042		2RG00	
	043		1IIFBI	
	044		GRDC	
	045		1PRSTI	
	046		2RGD6	
	046		2RG06	
	047		2D7R1	
	047		2D7R1	
	048		2RG05	
	048		2RG05	
	049		2D5R1	
	049		2D5R1	
	050		2D3R1	
	050		2D3R1	
	051		2RG03	
	051		2RG03	
	052		2D1R1	
	052		2RG02	
	053		2RG02	
	053		2RG02	
	054		2DTR1	
	054		2DTR1	
	055		2RGD0	
	055		2RGD0	
	056		5B	
	101		GRDC	
	102		GRDC	
	112		GRDC	
	114		GRDC	
	115		GRDC	
	124		5B	
	132		5B	
	134		2DCR1	
	135		2D6R1	
	136		2D4R1	
	137		2RG04	
	138		2D2R1	
	139		2DPR1	
	140		2D0R1	
	141		2RG01	
	142		2DAR1	
	143		1PIFB0	
	144		GRDC	
	145		1IMR0	
	147		2DCR1	
	147		2DCR1	
	148		2D6R1	
	148		2D6R1	
	149		2D4R1	
	150		2RG04	
	150		2RG04	
	151		2D2R1	
	151		2D2R1	
	152		2DPR1	
	152		2DPR1	
	153		2D0R1	
	153		2D0R1	
	154		2RG01	
	154		2RG01	
	155		2DAR1	
	155		2DAR1	
	156		5B	
	200		GRDC	
	201		1CPR2	
	212		GRDC	
	224		GRDC	
	232		GRDC	
	233		2RG13	
	234		2D7R0	
	235		2RG12	
	236		2D5R0	
	237		2D3R0	
	238		2RG10	
	239		2D1R0	
	240		2RG09	
	241		2DTR0	
	242		2RG07	
	243		1IPRES	
	244		GRDC	
	246		2RG13	
	247		2D7R0	
	248		2RG12	
	249		2D5R0	
	250		2D3R0	
	251		2RG10	
	252		2D1R0	
	253		2RG09	
	254		2DTR0	
	255		2RG07	
	256		GRDC	
	900		GRDC	
04-162	CONTINUED			

WESTERN ELECTRIC CO., INC. PRINTED IN USA		DWG SIZE C2
T*3F008-11	SHEET B4	ISSUE 3

FIGURE AND/OR OPTION	FUNCT DESIG TERMINAL	TYPE NET	CODE ASOC TYPE ASOC NET	CODE NET OPT
04-162	CONTINUED			
	701	GRDC		
	702	GRDC		
	712	GRDC		
	714	GRDC		
	715	GRDC		
	724	GRDC		
	732	GRDC		
	734	2DCRQ		
	735	2D6RQ		
	736	2D4RQ		
	737	2RG11		
	738	2D2RQ		
	739	2DPRQ		
	740	2D0RQ		
	741	2RGDB		
	742	2DARQ		
	744	GRDC		
	747	2DCRQ		
	748	2D6RQ		
	749	2D4RQ		
	750	2RG11		
	751	2D2RQ		
	752	2DPRQ		
	753	2D0RQ		
	754	2RGDB		
	755	2DARQ		
	756	GRDC		
	756	GRDTIE		
H1	04-178	TF	CDCP-461A	
	E/W CP	967C		
	000	GRD		
	001	GRD		
	003	48RTNB		
	004	48RTNB		
	005	48RTNB		
	006	-48B		
	007	-48B		
	008	-48B		
	011	IRS		
	017	ICPR1		
	018	ISA		
	019	ISA		
	032	GRD		
	033	GRD		
	034	GRD		
	035	GRD		
	036	GRD		
	037	GRD		
	038	GRD		
	039	GRD		
	040	GRD		
	041	GRD		
	042	GRD		
	043	GRD		
	045	5B		
	046	5B		
	047	5B		
	048	5B		
	049	5B		
	050	5L		
	051	5B		
	052	5B		
	053	5B		
	054	5B		
	055	5B		
	056	5B		
	100	GRD		
	101	GRD		
	102	48RTNB		
	103	48RTNB		
	104	48RTNB		
	106	-48B		
	107	-48B		
	108	-48B		
	110	IRS		
	113	48RTNB		
	117	ICPR2		
	118	5B		
	119	GRD		
	132	GRD		
	133	GRD		
	134	GRD		
	135	GRD		
	136	GRD		
	137	GRD		
	138	GRD		
	139	GRD		
	140	GRD		
	141	GRD		
	142	GRD		
	143	GRD		
	145	5B		
	146	5B		
	147	5B		
	148	5B		
	149	5E		
	150	5H		
	151	5B		
	152	5B		
	153	5B		
	154	5B		
	155	5B		
	156	5B		
	200	GRD		
	201	GRD		
	203	48RTNB		
	204	48RTNB		
	205	48RTNB		
	206	-48B		
	207	-48B		
	208	-48B		
	232	GRD		
	233	GRD		
	234	GRD		
	235	GRD		
04-178	CONTINUED			

FIGURE AND/OR OPTION	FUNCT DESIG TERMINAL	TYPE NET	CODE ASOC TYPE ASOC NET	CODE NET OPT
04-178	CONTINUED			
	236	GRD		
	237	GRD		
	238	GRD		
	239	GRD		
	240	GRD		
	241	GRD		
	242	GRD		
	243	GRD		
	245	5B		
	246	5B		
	247	5B		
	248	5B		
	249	5B		
	250	5B		
	251	5B		
	252	5B		
	253	5B		
	254	5B		
	255	5B		
	256	5B		
	900	GRD		
	901	GRD		
	902	48RTNB		
	903	48RTNB		
	904	48RTNB		
	906	-48B		
	907	-48B		
	908	-48B		
	932	GRD		
	933	GRD		
	934	GRD		
	935	GRD		
	936	GRD		
	937	GRD		
	938	GRD		
	939	GRD		
	940	GRD		
	941	GRD		
	942	GRD		
	943	GRD		
	949	GRDTIE		
	945	5B		
	946	5B		
	947	5B		
	948	5B		
	949	5B		
	950	5B		
	951	5B		
	952	5B		
	953	5B		
	954	5B		
	955	5B		
	956	5B		

WESTERN ELECTRIC CO., INC. PRINTED IN USA		DWG SIZE C2
T*3F008-11	SHEET 85	ISSUE 3

NET ID TYPE	FUNCT	NET OPT DESIG	TERMINAL PAIR	METH PATH	COLOR	COMMON NET GA	INSUL	AP OPTION	PT	FN	TN	CONNECTING DRAWING AND NET
-48A			(SIGNAL)									
TF		04-018	006	PW								NOTE 49
TF		04-018	007	PW								NOTE 49
TF		04-018	008	PW								NOTE 49
TF		04-018	106	PW								NOTE 49
TF		04-018	107	PW								NOTE 49
TF		04-018	108	PW								NOTE 49
TF		04-018	206	PW								NOTE 49
TF		04-018	207	PW								NOTE 49
TF		04-018	208	PW								NOTE 49
TF		04-018	906	PW								NOTE 49
TF		04-018	907	PW								NOTE 49
TF		04-018	908									
-48B			(SIGNAL)									
TF		04-178	006	PW								NOTE 49
TF		04-178	007	PW								NOTE 49
TF		04-178	008	PW								NOTE 49
TF		04-178	106	PW								NOTE 49
TF		04-178	107	PW								NOTE 49
TF		04-178	108	PW								NOTE 49
TF		04-178	206	PW								NOTE 49
TF		04-178	207	PW								NOTE 49
TF		04-178	208	PW								NOTE 49
TF		04-178	906	PW								NOTE 49
TF		04-178	907	PW								NOTE 49
TF		04-178	908									
CP			(SIGNAL)									
TF		04-086	119	PW								NOTE 49 4A
TF		04-078	120									
DP			(SIGNAL)									
TF		04-086	219	PW								NOTE 49 2B
TF		04-078	121									
DR			(SIGNAL)									
TF		04-086	019	PW								NOTE 49 4A
TF		04-078	020									
EOT			(SIGNAL)									
TF		04-086	118	PW								NOTE 49 4A
TF		04-078	019									
ERR			(SIGNAL)									
TF		04-086	020	PW								NOTE 49 4A
TF		04-078	021									
GRD			(GROUND)									
TF		04-178	349	PW								NOTE 49 1A
TF		04-178	249	PW								NOTE 49 1A
TF		04-178	149	PW								NOTE 49 1A
TF		04-178	049	PW								NOTE 49 1B
TF		04-178	042	PW								NOTE 49 1B
TF		04-178	041	PW								NOTE 49 1B
TF		04-178	040	PW								NOTE 49 1B
TF		04-178	039	PW								NOTE 49 1B
TF		04-178	038	PW								NOTE 49 1B
TF		04-178	037	PW								NOTE 49 1B
TF		04-178	036	PW								NOTE 49 1B
TF		04-178	035	PW								NOTE 49 1B
TF		04-178	034	PW								NOTE 49 1B
TF		04-178	033	PW								NOTE 49 1B
TF		04-178	032	PW								NOTE 49 1A
TF		04-178	119	PW								NOTE 49
TF		04-178	132	PW								NOTE 49 1B
TF		04-178	139	PW								NOTE 49 1B
TF		04-178	134	PW								NOTE 49 1B
TF		04-178	135	PW								NOTE 49 1B
TF		04-178	136	PW								NOTE 49 1B
TF		04-178	137	PW								NOTE 49 1B
TF		04-178	138	PW								NOTE 49 1B
TF		04-178	139	PW								NOTE 49 1B
TF		04-178	140	PW								NOTE 49 1B
TF		04-178	141	PW								NOTE 49 1B
TF		04-178	142	PW								NOTE 49 1A
TF		04-178	242	PW								NOTE 49 1B
TF		04-178	241	PW								NOTE 49 1B
TF		04-178	240	PW								NOTE 49 1B
TF		04-178	239	PW								NOTE 49 1B
TF		04-178	238	PW								NOTE 49 1B
TF		04-178	237	PW								NOTE 49 1B
TF		04-178	236	PW								NOTE 49 1B
TF		04-178	235	PW								NOTE 49 1B
TF		04-178	234	PW								NOTE 49 1B
TF		04-178	233	PW								NOTE 49 1B
TF		04-178	232	PW								NOTE 49 1A
TF		04-178	332	PW								NOTE 49 1B
TF		04-178	333	PW								NOTE 49 1B
TF		04-178	334	PW								NOTE 49 1B
TF		04-178	335	PW								NOTE 49 1B
TF		04-178	336	PW								NOTE 49 1B
TF		04-178	337	PW								NOTE 49 1B
TF		04-178	338	PW								NOTE 49 1B
TF		04-178	339	PW								NOTE 49 1B
TF		04-178	340	PW								NOTE 49 1B
TF		04-178	341	PW								NOTE 49 1B
TF		04-178	342	PW								NOTE 49 4B
TF		04-178	301	PW								NOTE 49 1A
TF		04-178	201	PW								NOTE 49 1A
TF		04-178	101	PW								NOTE 49 1A
TF		04-178	001	PW								NOTE 49 1B
TF		04-178	000	PW								NOTE 49 1A
TF		04-178	100	PW								NOTE 49 1A
TF		04-178	200	PW								NOTE 49 1A
TF		04-178	900									
GRDA			(GROUND)									
TF		04-042	044	PW								NOTE 49 1A
TF		04-042	144	PW								NOTE 49 1A
TF		04-042	244	PW								NOTE 49 1A
TF		04-042	344	PW								NOTE 49 4A
TF		04-050	044	PW								NOTE 49 1A
TF		04-050	144	PW								NOTE 49 1A
TF		04-050	244	PW								NOTE 49 1A
TF		04-050	344	PW								NOTE 49 4B
TF		04-050	956	PW								NOTE 49 1A
GRDA			CONTINUED									

NET ID TYPE	FUNCT	NET OPT DESIG	TERMINAL PAIR	METH PATH	COLOR	COMMON NET GA	INSUL	AP OPTION	PT	FN	TN	CONNECTING DRAWING AND NET
GRDA			CONTINUED									
TF		04-050	256	PW								NOTE 49 4A
TF		04-042	356	PW								NOTE 49 1A
TF		04-042	256	PW								NOTE 49 4A
TF		04-034	356	PW								NOTE 49 1A
TF		04-034	256	PW								NOTE 49 1B
TF		04-034	255	PW								NOTE 49 1A
TF		04-034	154	PW								NOTE 49 1A
TF		04-034	253	PW								NOTE 49 7B
TF		04-034	251	PW								NOTE 49 1A
TF		04-034	150	PW								NOTE 49 7B
TF		04-034	248	PW								NOTE 49 7B
TF		04-034	246	PW								NOTE 49 7B
TF		04-034	344	PW								NOTE 49 1A
TF		04-034	244	PW								NOTE 49 1A
TF		04-034	144	PW								NOTE 49 1A
TF		04-034	044	PW								NOTE 49 7B
TF		04-034	142	PW								NOTE 49 1B
TF		04-034	141	PW								NOTE 49 1A
TF		04-034	240	PW								NOTE 49 7B
TF		04-034	238	PW								NOTE 49 1A
TF		04-034	137	PW								NOTE 49 7B
TF		04-034	235	PW								NOTE 49 7B
TF		04-034	233	PW								NOTE 49 1B
TF		04-034	232	PW								NOTE 49 1A
TF		04-034	332	PW								NOTE 49 1A
TF		04-042	232	PW								NOTE 49 1A
TF		04-042	332	PW								NOTE 49 4A
TF		04-050	232	PW								NOTE 49 1A
TF		04-050	332	PW								NOTE 49 4B
TF		04-050	132	PW								NOTE 49 1A
TF		04-050	224	PW								NOTE 49 4A
TF		04-042	324	PW								NOTE 49 1A
TF		04-042	224	PW								NOTE 49 4A
TF		04-034	324	PW								NOTE 49 1A
TF		04-034	224	PW								NOTE 49 4A
TF		04-026	324	PW								NOTE 49 1A
TF		04-026	224	PW								NOTE 49 4B
TF		04-026	232	PW								NOTE 49 1A
TF		04-026	332	PW								NOTE 49 4B
TF		04-026	344	PW								NOTE 49 1A
TF		04-026	244	PW								NOTE 49 1A
TF		04-026	144	PW								NOTE 49 1A
TF		04-026	044	PW								NOTE 49 4A
TF		04-018	343	PW								NOTE 49 1A
TF		04-018	243	PW								NOTE 49 1A
TF		04-018	143	PW								NOTE 49 1A
TF		04-018	043	PW								NOTE 49 1B
TF		04-018	042	PW								NOTE 49 1B
TF		04-018	041	PW								NOTE 49 1B
TF		04-018	040	PW								NOTE 49 1B
TF		04-018	039	PW								NOTE 49 1B
TF		04-018	038	PW								NOTE 49 1B
TF		04-018	037	PW								NOTE 49 1B
TF		04-018	036	PW								NOTE 49 1B
TF		04-018	035	PW								NOTE 49 1B
TF		04-018	034	PW								NOTE 49 1B
TF		04-018	033	PW								NOTE 49 1B
TF		04-018	092	PW								NOTE 49 1A
TF		04-018	192	PW								NOTE 49 1B
TF		04-018	133	PW								NOTE 49 1B
TF		04-018	134	PW								NOTE 49 1B
TF		04-018	135	PW								NOTE 49 1B
TF		04-018	136	PW								NOTE 49 1B
TF		04-018	137	PW								NOTE 49 1B
TF		04-018	138	PW								NOTE 49 1B
TF		04-018	139	PW								NOTE 49 1B
TF		04-018	140	PW								NOTE 49 1B
TF		04-018	141	PW								NOTE 49 1B
TF		04-018	142	PW								NOTE 49 1A
TF		04-018	242	PW								NOTE 49 1B
TF		04-018	241	PW								NOTE 49 1B
TF		04-018	240	PW								NOTE 49 1B
TF		04-018	239	PW								NOTE 49 1B
TF		04-018	238	PW								NOTE 49 1B
TF		04-018	237	PW								NOTE 49 1B
TF		04-018	236	PW								NOTE 49 1B
TF		04-018	235	PW								NOTE 49 1B
TF		04-018	234	PW								NOTE 49 1B
TF		04-018	233	PW								NOTE 49 1A
TF		04-018	232	PW								NOTE 49 1B
TF		04-018	332	PW								NOTE 49 1B
TF		04-018	333	PW								NOTE 49 1B
TF		04-018	334	PW								NOTE 49 1B
TF		04-018	335	PW								NOTE 49 1B
TF		04-018	336	PW								NOTE 49 1B
TF		04-018	337	PW								NOTE 49 1B
TF		04-018	338	PW								NOTE 49 1B
TF		04-018	339	PW								NOTE 49 1B
TF		04-018	340	PW								NOTE 49 1B
TF		04-018	341	PW								NOTE 49 1B
TF		04-018	342	PW								NOTE 49 2C
TF		04-026	256	PW								NOTE 49 1A
TF		04-026	356	PW								NOTE 49 2C
TF		04-026	012	PW								NOTE 49 1A
TF		04-026	112	PW								NOTE 49 1A
TF		04-026	212	PW								NOTE 49 1A
TF		04-026	312	PW								NOTE 49 4A
TF		04-034	112	PW								NOTE 49 4A
TF		04-042	112	PW								NOTE 49 4A
TF		04-050	112	PW								NOTE 49 2B
TF		04-050	100	PW								NOTE 49 1A
TF		04-050	200	PW								NOTE 49 4A
TF		04-042	300	PW								NOTE 49 1A
TF		04-042	200	PW								NOTE 49 4A
TF		04-034	300	PW								NOTE 49 1A
TF		04-034	200	PW								NOTE 49 4A
TF		04-026	300	PW								NOTE 49 1A
TF		04-026	200	PW								NOTE 49 4A
TF		04-018	300	PW								NOTE 49 1A
TF		04-018	200	PW								NOTE 49 1A
TF		04-018	100	PW								NOTE 49 1A
TF		04-018	000	PW								NOTE 49 1B
TF		04-018	001	PW								NOTE 49 1A
TF		04-018	101	PW								NOTE 49 1A
TF		04-018	201	PW								NOTE 49 1A
TF		04-026	901	PW								NOTE 49
GRDA			CONTINUED									

NET ID TYPE	FUNCT	NET OPT DESIG	TERMINAL PAIR	METH PATH	COLOR	COMMON NET GA	INSUL	AP OPTION	PT	FN	TN	CONNECTING DRAWING AND NET
GRDA			CONTINUED									
TF		04-026	902	PW								NOTE 49
TF		04-026	914	PW								NOTE 49
TF		04-018	119	PW								NOTE 49
TF		04-026	915	PW								NOTE 49
TF		04-026	101	PW								NOTE 49
TF		04-026	102	PW								NOTE 49
TF		04-026	114	PW								NOTE 49
TF		04-026	115	PW								NOTE 49
TF		04-018	901									
GRDB			(GROUND)									
TF		04-086	956	PW								NOTE 49 4A
TF		04-078	956	PW								NOTE 49 1A
TF		04-078	256	PW								NOTE 49 4A
TF		04-068	456	PW								NOTE 49 1A
TF		04-068	356	PW								NOTE 49 7A
TF		04-068	556	PW								NOTE 49 4B
TF		04-068	501	PW								NOTE 49 4B
TF		04-068	550	PW								NOTE 49 4B
TF		04-068	447	PW								NOTE 49 4B
TF		04-068	344	PW								NOTE 49 1A
TF		04-068	244	PW								NOTE 49 1A
TF		04-068	144	PW								NOTE 49 1A
TF		04-068	044	PW								NOTE 49 4A
TF		04-058	044	PW								NOTE 49 1A
TF		04-058	144	PW								NOTE 49 1A
TF		04-058	244	PW								NOTE 49 1A
TF		04-058	344	PW								NOTE 49 4B
TF		04-058	447	PW								NOTE 49 4B
TF		04-058	550	PW								NOTE 49 4B
TF		04-058	532	PW								NOTE 49 4B
TF		04-058	556	PW								NOTE 49 7A
TF		04-058	356	PW								NOTE 49 1A
TF		04-058	432	PW								NOTE 49 4B
TF		04-058	332	PW								NOTE 49 1A
TF		04-058	456	PW								NOTE 49 4B
TF		04-058	501	PW								NOTE 49 1A
TF		04-058	324	PW								NOTE 49 1A
TF		04-058	424	PW								NOTE 49 1A
TF		04-058	524	PW								NOTE 49 4B
TF		04-058	419	PW								NOTE 49 2A
TF		04-058	414	PW								NOTE 49 2A
TF		04-058	112	PW								NOTE 49 4A
TF		04-068	112	PW								NOTE 49 2A
TF		04-068	414	PW								NOTE 49 4B
TF		04-068	419	PW								NOTE 49 4B
TF		04-068	524	PW								NOTE 49 1A
TF		04-068	424	PW								NOTE 49 1A
TF		04-068	324	PW								NOTE 49 1A
TF		04-068	432	PW								NOTE 49 4B
TF		04-068	532	PW								NOTE 49 1A
TF		04-068	332	PW								NOTE 49 2B
TF		04-078	112	PW								NOTE 49 4B
TF		04-078	224	PW								NOTE 49 1A
TF		04-078	324	PW								NOTE 49 4B
TF		04-078	332	PW								NOTE 49 1A
TF		04-078	112	PW								NOTE 49 4B
TF		04-078	224	PW								NOTE 49 1A
TF		04-078	324	PW								NOTE 49 4B
TF		04-078	332	PW								NOTE 49 1A
TF		04-078	232	PW								NOTE 49 7B
TF		04-078	294	PW								NOTE 49 1A
TF		04-078	195	PW								NOTE 49 7B
TF		04-078	197	PW								NOTE 49 7B
TF		04-078	199	PW								NOTE 49 7B
TF		04-078	141	PW								NOTE 49 7B
TF		04-078	143	PW								NOTE 49 1B
TF		04-078	144	PW								NOTE 49 1B
TF		04-078	145	PW								NOTE 49 7B
TF		04-078	147	PW								NOTE 49 7B
TF		04-078	149	PW								NOTE 49 7B
TF		04-078	151	PW								NOTE 49 7B
TF		04-078	153	PW								NOTE 49 7B
TF		04-078	155	PW								NOTE 49 1A
TF		04-078	254	PW								NOTE 49 7B
TF		04-078	252	PW								NOTE 49 7B
TF		04-078	250	PW								NOTE 49 7B
TF		04-078	248	PW								NOTE 49 7B
TF		04-078	246	PW								NOTE 49 7B
TF		04-078	244	PW								NOTE 49 7B
TF		04-078	242	PW								NOTE 49 7B
TF		04-078	240	PW								NOTE 49 7B
TF		04-078	238	PW								NOTE 49 7B
TF		04-078	236	PW								NOTE 49 4A
TF		04-086	236	PW								NOTE 49 7B
TF		04-086	238	PW								NOTE 49 7B
TF		04-086	240	PW								NOTE 49 7B
TF		04-086	242	PW								NOTE 49 7B
TF		04-086	244	PW								NOTE 49 7B
TF		04-086	246	PW								NOTE 49 7B
TF		04-086	248	PW								NOTE 49 7B
TF		04-086	250	PW								NOTE 49 7B
TF		04-086	252	PW								NOTE 49 7B
TF		04-086	254	PW								NOTE 49 1A
TF		04-086	155	PW								NOTE 49 7B
TF		04-086	153	PW								NOTE 49 7B
TF		04-086	151	PW								NOTE 49 7B
TF		04-086	149	PW								NOTE 49 7B
TF		04-086	147	PW								NOTE 49 7B
TF		04-086	145	PW								NOTE 49 1B
TF		04-086	144	PW								NOTE 49 1B
TF		04-086	143	PW								NOTE 49 7B
TF		04-086	141	PW								NOTE 49 7B
TF		04-086	139	PW								NOTE 49 7B
TF		04-086	137	PW								NOTE 49 7B
TF		04-086	135	PW								NOTE 49 1A
TF		04-086	234	PW								NOTE 49 7B
TF		04-086	232	PW								NOTE 49 1A
TF		04-086	332	PW								NOTE 49 4B
TF		04-086	924	PW								NOTE 49 1A
TF		04-086	224	PW								NOTE 49 7B
TF		04-086	222	PW								NOTE 49 4B
TF		04-086	218	PW								NOTE 49 7B
TF		04-086	220	PW								NOTE 49 1A
TF		04-086	121	PW								NOTE 49 7B
TF		04-086	119	PW								NOTE 49 7B
TF		04-086	117	PW								NOTE 49 1A
TF		04-086	216	PW								NOTE 49 7B
TF		04-086	214	PW								NOTE 49 1A
TF		04-086	113	PW								NOTE 49 7B
GRDB			CONTINUED									

NET ID TYPE	FUNCT	NET OPT DESIG	TERMINAL PAIR	METH PATH	COLOR	COMMON NET GA	INSUL	AP OPTION	PT	FN	TN	CONNECTING DRAWING AND NET
GRDB			CONTINUED									
TF		04-086	111	PW								NOTE 49 1A
TF		04-086	212	PW								NOTE 49 1A
TF		04-086	311	PW								NOTE 49 4B
TF		04-086	206	PW								NOTE 49 7B
TF		04-086	204	PW								NOTE 49 7B
TF		04-086	202	PW								NOTE 49 1A
TF		04-086	103	PW								NOTE 49 7B
TF		04-086	101	PW								NOTE 49 1A
TF		04-086	200	PW								NOTE 49 4A
TF		04-078	908	PW								NOTE 49 1A
TF		04-078	208	PW								NOTE 49 4A
TF		04-068	500	PW								NOTE 49 1A
TF		04-068	400	PW								NOTE 49 1A
TF		04-068	300	PW								NOTE 49 1A
TF		04-058	500	PW								NOTE 49 1A
TF		04-058	400	PW								NOTE 49 1A
TF		04-058	033	PW								NOTE 49
TF		04-058	035	PW								NOTE 49
TF		04-058	038	PW								NOTE 49
TF		04-058	040	PW								NOTE 49
TF		04-058	042	PW								NOTE 49
TF		04-058	137	PW								NOTE 49
TF		04-058	141	PW								NOTE 49
TF		04-058	900									
GRDC			(GROUND)									
TF		04-162	356	PW								NOTE 49 1A
TF		04-162	256	PW								NOTE 49 4A
TF		04-152	432	PW								NOTE 49 1A
TF		04-152	356	PW								NOTE 49 7A
TF		04-152	556	PW								NOTE 49 4B
TF		04-152	456	PW								NOTE 49 4B
TF		04-152	550	PW								NOTE 49 4B
TF		04-152	447	PW								NOTE 49 4B
TF		04-152	344	PW								NOTE 49 1A
TF		04-152	244	PW								NOTE 49 1A
TF		04-152	144	PW								NOTE 49 1A
TF		04-152	044	PW								NOTE 49 4A
TF		04-162	044	PW								NOTE 49 1A
TF		04-162	144	PW								NOTE 49 1A
TF		04-162	244	PW								NOTE 49 1A
TF		04-162	344	PW								NOTE 49 4B
TF		04-162	332	PW								NOTE 49 1A
TF		04-162	232	PW								NOTE 49 4B
TF		04-162	224	PW								NOTE 49 1A
TF		04-162	324	PW								NOTE 49 4A
TF		04-118	224	PW								NOTE 49 1A
TF		04-118	324	PW								NOTE 49 4A
TF		04-126	224	PW								NOTE 49 1A
TF		04-126	324	PW								NOTE 49 4A
TF		04-134	224	PW								NOTE 49 1A
TF		04-134	324	PW								NOTE 49 4A
TF		04-142	432	PW								NOTE 49 1A
TF		04-142	324	PW								NOTE 49 1A
TF		04-142	424	PW								NOTE 49 1A
TF		04-142	524	PW								NOTE 49 4B
TF		04-142	419	PW								NOTE 49 4B
TF		04-142	414	PW								NOTE 49 2A
TF		04-142	112	PW								NOTE 49 4A
TF		04-134	112	PW								NOTE 49 4A
TF		04-126	112	PW								NOTE 49 4A
TF		04-118	112	PW								NOTE 49 4B
TF		04-118	200	PW								NOTE 49 1A
TF		04-118	300	PW								NOTE 49 4A
TF		04-126	200	PW								NOTE 49 1A
TF		04-126	300	PW								NOTE 49 4A
TF		04-134	200	PW								NOTE 49 1A
TF		04-134	300	PW								NOTE 49 4A
TF		04-142	456	PW								NOTE 49 1A
TF		04-142	300	PW								NOTE 49 1A
TF		04-142	400	PW								NOTE 49 1A
TF		04-142	500	PW								NOTE 49 4A
TF		04-152	532	PW								NOTE 49 1A
TF		04-152	300	PW								NOTE 49 1A
TF		04-152	400	PW								NOTE 49 1A
TF		04-152	501	PW								NOTE 49 4A
TF		04-162	200	PW								NOTE 49 1A
TF		04-162	300	PW								NOTE 49 4B
TF		04-162	312	PW								NOTE 49 1A
TF		04-162	212	PW								NOTE 49 1A
TF		04-162	112	PW								NOTE 49 1A
TF		04-162	012	PW								NOTE 49 4A
TF		04-152	112	PW								NOTE 49 2A
TF		04-152	414	PW								NOTE 49 4B
TF		04-152	412	PW								NOTE 49 4B
TF		04-152	524	PW								NOTE 49 1A
TF		04-152	424	PW								NOTE 49 1A
TF		04-152	324	PW								NOTE 49 1A
TF		04-152	332	PW								NOTE 49 4A
TF		04-142	332	PW								NOTE 49 1A
TF		04-142	532	PW								NOTE 49 4A
TF		04-134	332	PW								NOTE 49 1A
TF

NET ID TYPE	FUNCT	NET OPT DESIG	TERMINAL PAIR	METH PATH	COMMON NET COLOR	GA INSUL	AP OPTION	PT FN TN CONNECTING DRAWING AND NET
GRDC		CONTINUED						
TF	04-118	344		PW				NOTE 49 7B
TF	04-118	246		PW				NOTE 49 7B
TF	04-118	248		PW				NOTE 49 7B
TF	04-118	150		PW				NOTE 49 1A
TF	04-118	251		PW				NOTE 49 7B
TF	04-118	253		PW				NOTE 49 1A
TF	04-118	154		PW				NOTE 49 1A
TF	04-118	255		PW				NOTE 49 1B
TF	04-118	256		PW				NOTE 49 1A
TF	04-118	356		PW				NOTE 49 4A
TF	04-126	256		PW				NOTE 49 1A
TF	04-126	356		PW				NOTE 49 4A
TF	04-134	256		PW				NOTE 49 1A
TF	04-134	356		PW				NOTE 49 4A
TF	04-142	956		PW				NOTE 49 7A
TF	04-142	556		PW				NOTE 49 4B
TF	04-142	501		PW				NOTE 49 4B
TF	04-142	550		PW				NOTE 49 4B
TF	04-142	447		PW				NOTE 49 4B
TF	04-142	344		PW				NOTE 49 1A
TF	04-142	244		PW				NOTE 49 1A
TF	04-142	144		PW				NOTE 49 1A
TF	04-142	044		PW				NOTE 49 4A
TF	04-134	344		PW				NOTE 49 1A
TF	04-134	244		PW				NOTE 49 1A
TF	04-134	144		PW				NOTE 49 1A
TF	04-134	044		PW				NOTE 49 4A
TF	04-126	344		PW				NOTE 49 1A
TF	04-126	244		PW				NOTE 49 1A
TF	04-126	144		PW				NOTE 49 1A
TF	04-126	044		PW				NOTE 49
TF	04-162	101		PW				NOTE 49
TF	04-162	102		PW				NOTE 49
TF	04-162	114		PW				NOTE 49
TF	04-162	115		PW				NOTE 49
TF	04-162	901		PW				NOTE 49
TF	04-162	902		PW				NOTE 49
TF	04-162	914		PW				NOTE 49
TF	04-134	123		PW				NOTE 49
TF	04-142	046		PW				NOTE 49
TF	04-142	048		PW				NOTE 49
TF	04-142	051		PW				NOTE 49
TF	04-142	059		PW				NOTE 49
TF	04-142	150		PW				NOTE 49
TF	04-142	233		PW				NOTE 49
TF	04-142	235		PW				NOTE 49
TF	04-142	238		PW				NOTE 49
TF	04-142	240		PW				NOTE 49
TF	04-142	242		PW				NOTE 49
TF	04-142	337		PW				NOTE 49
TF	04-142	941		PW				NOTE 49
TF	04-152	900		PW				NOTE 49
TF	04-162	915						
GRDTIE		<GROUND>						
TF	04-178	343		PW				NOTE 49
TF	04-042	044		PW				NOTE 49
TF	04-086	356		PW				NOTE 49
TF	04-162	356						
INFP0		<SIGNAL>						
TF	04-086	354		PW				NOTE 49 4A
TF	04-078	354						
INFP1		<SIGNAL>						
TF	04-086	154		PW				NOTE 49 4A
TF	04-078	154						
INFP2		<SIGNAL>						
TF	04-086	342		PW				NOTE 49 4A
TF	04-078	342						
INFP3		<SIGNAL>						
TF	04-086	142		PW				NOTE 49 4A
TF	04-078	142						
INFQ		<SIGNAL>						
TF	04-086	134		PW				NOTE 49 4A
TF	04-078	134						
INF1		<SIGNAL>						
TF	04-086	035		PW				NOTE 49 4A
TF	04-078	035						
INF10		<SIGNAL>						
TF	04-086	336		PW				NOTE 49 4A
TF	04-078	336						
INF11		<SIGNAL>						
TF	04-086	237		PW				NOTE 49 4A
TF	04-078	237						
INF12		<SIGNAL>						
TF	04-086	338		PW				NOTE 49 4A
TF	04-078	338						
INF13		<SIGNAL>						
TF	04-086	239		PW				NOTE 49 4A
TF	04-078	239						
INF14		<SIGNAL>						
TF	04-086	340		PW				NOTE 49 4A
TF	04-078	340						
INF15		<SIGNAL>						
TF	04-086	241		PW				NOTE 49 4A
TF	04-078	241						
INF16		<SIGNAL>						
TF	04-086	146		PW				NOTE 49 4A
TF	04-078	146						
INF17		<SIGNAL>						
TF	04-086	047		PW				NOTE 49 4A
TF	04-078	047						

NET ID TYPE	FUNCT	NET OPT DESIG	TERMINAL PAIR	METH PATH	COMMON NET COLOR	GA INSUL	AP OPTION	PT FN TN CONNECTING DRAWING AND NET
INF18		<SIGNAL>						
TF	04-086	148		PW				NOTE 49 4A
TF	04-078	148						
INF19		<SIGNAL>						
TF	04-086	049		PW				NOTE 49 4A
TF	04-078	049						
INF2		<SIGNAL>						
TF	04-086	136		PW				NOTE 49 4A
TF	04-078	136						
INF20		<SIGNAL>						
TF	04-086	150		PW				NOTE 49 4A
TF	04-078	150						
INF21		<SIGNAL>						
TF	04-086	051		PW				NOTE 49 4A
TF	04-078	051						
INF22		<SIGNAL>						
TF	04-086	152		PW				NOTE 49 4A
TF	04-078	152						
INF23		<SIGNAL>						
TF	04-086	053		PW				NOTE 49 4A
TF	04-078	053						
INF24		<SIGNAL>						
TF	04-086	346		PW				NOTE 49 4A
TF	04-078	346						
INF25		<SIGNAL>						
TF	04-086	247		PW				NOTE 49 4A
TF	04-078	247						
INF26		<SIGNAL>						
TF	04-086	348		PW				NOTE 49 4A
TF	04-078	348						
INF27		<SIGNAL>						
TF	04-086	249		PW				NOTE 49 4A
TF	04-078	249						
INF28		<SIGNAL>						
TF	04-086	350		PW				NOTE 49 4A
TF	04-078	350						
INF29		<SIGNAL>						
TF	04-086	251		PW				NOTE 49 4A
TF	04-078	251						
INF3		<SIGNAL>						
TF	04-086	037		PW				NOTE 49 4A
TF	04-078	037						
INF30		<SIGNAL>						
TF	04-086	352		PW				NOTE 49 4A
TF	04-078	352						
INF31		<SIGNAL>						
TF	04-086	253		PW				NOTE 49 4A
TF	04-078	253						
INF4		<SIGNAL>						
TF	04-086	138		PW				NOTE 49 4A
TF	04-078	138						
INF5		<SIGNAL>						
TF	04-086	039		PW				NOTE 49 4A
TF	04-078	039						
INF6		<SIGNAL>						
TF	04-086	140		PW				NOTE 49 4A
TF	04-078	140						
INF7		<SIGNAL>						
TF	04-086	041		PW				NOTE 49 4A
TF	04-078	041						
INF8		<SIGNAL>						
TF	04-086	334		PW				NOTE 49 4A
TF	04-078	334						
INF9		<SIGNAL>						
TF	04-086	235		PW				NOTE 49 4A
TF	04-078	235						
INT		<SIGNAL>						
TF	04-086	321		PW				NOTE 49 2B
TF	04-078	123						
SETUP		<SIGNAL>						
TF	04-086	022		PW				NOTE 49 4A
TF	04-078	029						
SST		<SIGNAL>						
TF	04-086	318		PW				NOTE 49 [illegible]
TF	04-078	119						
SYNC		<SIGNAL>						
TF	04-086	221		PW				NOTE 49 4A
TF	04-078	122						
XFER		<SIGNAL>						
TF	04-086	021		PW				NOTE 49 4A
TF	04-078	022						
XRSTO		<SIGNAL>						
TF	04-034	021		PW				NOTE 49
TF	04-050	021						
XRSTI		<SIGNAL>						
TF	04-034	022		PW				NOTE 49
TF	04-042	021						

NET ID TYPE	FUNCT	NET OPT DESIG	TERMINAL PAIR	METH PATH	COMMON NET COLOR	GA INSUL	AP OPTION	PT FN TN CONNECTING DRAWING AND NET
OA0		<SIGNAL>						
TF	04-078	301		PW				NOTE 49 4A
TF	04-068	301		PW				NOTE 49 4A
TF	04-058	301		PW				NOTE 49 4A
TF	04-050	301		PW				NOTE 49 4A
TF	04-042	301		PW				NOTE 49 4A
TF	04-034	301						
OA1		<SIGNAL>						
TF	04-078	102		PW				NOTE 49 4A
TF	04-068	102		PW				NOTE 49 4A
TF	04-058	102		PW				NOTE 49 4A
TF	04-050	102		PW				NOTE 49 4A
TF	04-042	102		PW				NOTE 49 4A
TF	04-034	102						
OA10		<SIGNAL>						
TF	04-078	204		PW				NOTE 49 4A
TF	04-068	204		PW				NOTE 49 4A
TF	04-058	204		PW				NOTE 49 4A
TF	04-050	204		PW				NOTE 49 4A
TF	04-042	204		PW				NOTE 49 4A
TF	04-034	204						
OA11		<SIGNAL>						
TF	04-078	304		PW				NOTE 49 4A
TF	04-068	304		PW				NOTE 49 4A
TF	04-058	304		PW				NOTE 49 4A
TF	04-050	304		PW				NOTE 49 4A
TF	04-042	304		PW				NOTE 49 4A
TF	04-034	304						
OA12		<SIGNAL>						
TF	04-078	005		PW				NOTE 49 4A
TF	04-068	005		PW				NOTE 49 4A
TF	04-058	005		PW				NOTE 49 4A
TF	04-050	005		PW				NOTE 49 4A
TF	04-042	005		PW				NOTE 49 4A
TF	04-034	005						
OA13		<SIGNAL>						
TF	04-078	105		PW				NOTE 49 4A
TF	04-068	105		PW				NOTE 49 4A
TF	04-058	105		PW				NOTE 49 4A
TF	04-050	105		PW				NOTE 49 4A
TF	04-042	105		PW				NOTE 49 4A
TF	04-034	105						
OA14		<SIGNAL>						
TF	04-078	205		PW				NOTE 49 4A
TF	04-068	205		PW				NOTE 49 4A
TF	04-058	205		PW				NOTE 49 4A
TF	04-050	205		PW				NOTE 49 4A
TF	04-042	205		PW				NOTE 49 4A
TF	04-034	205						
OA15		<SIGNAL>						
TF	04-078	305		PW				NOTE 49 4A
TF	04-068	305		PW				NOTE 49 4A
TF	04-058	305		PW				NOTE 49 4A
TF	04-050	305		PW				NOTE 49 4A
TF	04-042	305		PW				NOTE 49 4A
TF	04-034	305						
OA16		<SIGNAL>						
TF	04-078	006		PW				NOTE 49 4A
TF	04-068	006		PW				NOTE 49 4A
TF	04-058	006		PW				NOTE 49 4A
TF	04-050	006		PW				NOTE 49 4A
TF	04-042	006		PW				NOTE 49 4A
TF	04-034	006						
OA17		<SIGNAL>						
TF	04-078	106		PW				NOTE 49 4A
TF	04-068	106		PW				NOTE 49 4A
TF	04-058	106		PW				NOTE 49 4A
TF	04-050	106		PW				NOTE 49 4A
TF	04-042	106		PW				NOTE 49 4A
TF	04-034	106						
OA18		<SIGNAL>						
TF	04-078	206		PW				NOTE 49 4A
TF	04-068	206		PW				NOTE 49 4A
TF	04-058	206		PW				NOTE 49 4A
TF	04-050	206		PW				NOTE 49 4A
TF	04-042	206		PW				NOTE 49 4A
TF	04-034	206						
OA19		<SIGNAL>						
TF	04-078	306		PW				NOTE 49 4A
TF	04-068	306		PW				NOTE 49 4A
TF	04-058	306		PW				NOTE 49 4A
TF	04-050	306		PW				NOTE 49 4A
TF	04-042	306		PW				NOTE 49 4A
TF	04-034	306						
OA2		<SIGNAL>						
TF	04-078	202		PW				NOTE 49 4A
TF	04-068	202		PW				NOTE 49 4A
TF	04-058	202		PW				NOTE 49 4A
TF	04-050	202		PW				NOTE 49 4A
TF	04-042	202		PW				NOTE 49 4A
TF	04-034	202						
OA3		<SIGNAL>						
TF	04-078	302		PW				NOTE 49 4A
TF	04-068	302		PW				NOTE 49 4A
TF	04-058	302		PW				NOTE 49 4A
TF	04-050	302		PW				NOTE 49 4A
TF	04-042	302		PW				NOTE 49 4A
TF	04-034	302						
OA4		<SIGNAL>						
TF	04-078	003		PW				NOTE 49 4A
TF	04-068	003		PW				NOTE 49 4A
TF	04-058	003		PW				NOTE 49 4A
TF	04-050	003		PW				NOTE 49 4A
OA4		CONTINUED						

NET ID TYPE	FUNCT	NET OPT DESIG	TERMINAL PAIR	METH PATH	COMMON NET COLOR	GA INSUL	AP OPTION	PT FN TN CONNECTING DRAWING AND NET
OA4		CONTINUED						
TF	04-042	003		PW				NOTE 49 4A
TF	04-034	003						
OA5		<SIGNAL>						
TF	04-078	103		PW				NOTE 49 4A
TF	04-068	103		PW				NOTE 49 4A
TF	04-058	103		PW				NOTE 49 4A
TF	04-050	103		PW				NOTE 49 4A
TF	04-042	103		PW				NOTE 49 4A
TF	04-034	103						
OA6		<SIGNAL>						
TF	04-078	203		PW				NOTE 49 4A
TF	04-068	203		PW				NOTE 49 4A
TF	04-058	203		PW				NOTE 49 4A
TF	04-050	203		PW				NOTE 49 4A
TF	04-042	203		PW				NOTE 49 4A
TF	04-034	203						
OA7		<SIGNAL>						
TF	04-078	303		PW				NOTE 49 4A
TF	04-068	303		PW				NOTE 49 4A
TF	04-058	303		PW				NOTE 49 4A
TF	04-050	303		PW				NOTE 49 4A
TF	04-042	303		PW				NOTE 49 4A
TF	04-034	303						
OA8		<SIGNAL>						
TF	04-078	004		PW				NOTE 49 4A
TF	04-068	004		PW				NOTE 49 4A
TF	04-058	004		PW				NOTE 49 4A
TF	04-050	004		PW				NOTE 49 4A
TF	04-042	004		PW				NOTE 49 4A
TF	04-034	004						
OA9		<SIGNAL>						
TF	04-078	104		PW				NOTE 49 4A
TF	04-068	104		PW				NOTE 49 4A
TF	04-058	104		PW				NOTE 49 4A
TF	04-050	104		PW				NOTE 49 4A
TF	04-042	104		PW				NOTE 49 4A
TF	04-034	104						
OBHE		<SIGNAL>						
TF	04-078	007		PW				NOTE 49 4A
TF	04-068	007		PW				NOTE 49 4A
TF	04-058	007		PW				NOTE 49 4A
TF	04-050	007		PW				NOTE 49 4A
TF	04-042	007		PW				NOTE 49 4A
TF	04-034	007						
OBLKDSI		<SIGNAL>						
TF	04-068	415		D4	G			30NOTE 11 4A
TF	04-058	415						
OBLKDI		<SIGNAL>						
TF	04-068	416		D4	G			30NOTE 11 4A
TF	04-058	416						
OBLKTOD		<SIGNAL>						
TF	04-068	418		D4	G			30NOTE 11 4A
TF	04-058	418						
OBLKO		<SIGNAL>						
TF	04-068	543		D4	G			30NOTE 11 4A
TF	04-058	543						
OCBLKO		<SIGNAL>						
TF	04-058	403		D4	G			30NOTE 11 4A
TF	04-068	403						
OCCLK		<SIGNAL>						
TF	04-078	315		PW				NOTE 49 4A
TF	04-068	315		PW				NOTE 49 4A
TF	04-058	315		PW				NOTE 49 4A
TF	04-050	315		PW				NOTE 49 4A
TF	04-042	315		PW				NOTE 49 4A
TF	04-034	315						
OCI		<SIGNAL>						
TF	04-078	343		D4	G			30NOTE 11 4A
TF	04-068	343		D4	G			30NOTE 11 4A
TF	04-058	343						
OCIERRO		<SIGNAL>						
TF	04-068	540		D4	G			30NOTE 11 4A
TF	04-058	540						
OCISOLO		<SIGNAL>						
TF	04-068	443		D4	G			30NOTE 11 4A
TF	04-058	443						
OCLRERRO		<SIGNAL>						
TF	04-058	402		D4	G			30NOTE 11 4A
TF	04-068	402						
OCLRQUAR		<SIGNAL>						
TF	04-068	545		D4	G			30NOTE 11 4A
TF	04-058	545						
OCPRI		<SIGNAL>						
TF	04-086	024		PW				NOTE 49 2C
TF	04-078	002		PW				NOTE 49 4A
TF	04-068	502		PW				NOTE 49 4A
TF	04-058	502		PW				NOTE 49 4A
TF	04-050	002		PW				NOTE 49 4A
TF	04-042	002		PW				NOTE 49 4A
OCPRI		CONTINUED						

NET ID TYPE	FUNCT	NET OPT DESIG	TERMINAL	COMMON NET METH PAIR	COLOR PATH	GA	INSUL	AP OPTION	PT	FN	TN CONNECTING DRAWING AND NET
OCPR1			CONTINUED								
TF	04-034		002	PW				NOTE 49 4A			
TF	04-026		002	PW				NOTE 49 2B			
TF	04-018		017								
OCPR2			(SIGNAL)								
TF	04-086		029	PW				NOTE 49 2C			
TF	04-078		201	PW				NOTE 49 4A			
TF	04-068		509	PW				NOTE 49 4A			
TF	04-058		509	PW				NOTE 49 4A			
TF	04-050		201	PW				NOTE 49 4A			
TF	04-042		201	PW				NOTE 49 4A			
TF	04-034		201	PW				NOTE 49 4A			
TF	04-026		201	PW				NOTE 49 2B			
TF	04-018		117								
OCQ			(SIGNAL)								
TF	04-078		945	D4	G			3ONOTE 11 4A			
TF	04-068		945	D4	G			3ONOTE 11 4A			
TF	04-058		945								
OCRDY0			(SIGNAL)								
TF	04-068		529	D4	G			3ONOTE 11 4A			
TF	04-058		529								
OCRDY1			(SIGNAL)								
TF	04-068		520	D4	G			3ONOTE 11 4A			
TF	04-058		520								
ODAIDB			(SIGNAL)								
TF	04-068		522	D4	G			3ONOTE 11 4A			
TF	04-058		522								
ODAK0			(SIGNAL)								
TF	04-078		918	PW				NOTE 49 4A			
TF	04-068		918	PW				NOTE 49 4A			
TF	04-058		918	PW				NOTE 49 4A			
TF	04-050		918	PW				NOTE 49 4A			
TF	04-042		918	PW				NOTE 49 4A			
TF	04-034		918								
ODAK1			(SIGNAL)								
TF	04-078		919	PW				NOTE 49 4A			
TF	04-068		919	PW				NOTE 49 4A			
TF	04-058		919	PW				NOTE 49 4A			
TF	04-050		919	PW				NOTE 49 4A			
TF	04-042		919	PW				NOTE 49 4A			
TF	04-034		919								
ODAK2			(SIGNAL)								
TF	04-078		920	PW				NOTE 49 4A			
TF	04-068		920	PW				NOTE 49 4A			
TF	04-058		920	PW				NOTE 49 4A			
TF	04-050		920	PW				NOTE 49 4A			
TF	04-042		920	PW				NOTE 49 4A			
TF	04-034		920								
ODAK3			(SIGNAL)								
TF	04-078		921	PW				NOTE 49 4A			
TF	04-068		921	PW				NOTE 49 4A			
TF	04-058		921	PW				NOTE 49 4A			
TF	04-050		921	PW				NOTE 49 4A			
TF	04-042		921	PW				NOTE 49 4A			
TF	04-034		921								
ODAOD1			(SIGNAL)								
TF	04-068		512	D4	G			3ONOTE 11 4A			
TF	04-058		512								
ODAORO			(SIGNAL)								
TF	04-068		534	D4	G			3ONOTE 11 4A			
TF	04-058		534								
ODAOR1			(SIGNAL)								
TF	04-068		511	D4	G			3ONOTE 11 4A			
TF	04-058		511								
ODARO			(SIGNAL)								
TF	04-058		342	PW				NOTE 49 4A			
TF	04-026		142								
ODAR1			(SIGNAL)								
TF	04-026		355	PW				NOTE 49			
TF	04-058		155	D4	G			3ONOTE 11 4A			
TF	04-068		155								
ODCLK			(SIGNAL)								
TF	04-078		115	PW				NOTE 49 4A			
TF	04-068		115	PW				NOTE 49 4A			
TF	04-058		115	PW				NOTE 49 4A			
TF	04-050		115	PW				NOTE 49 4A			
TF	04-042		115	PW				NOTE 49 4A			
TF	04-034		115								
ODCR0			(SIGNAL)								
TF	04-058		334	PW				NOTE 49 4A			
TF	04-026		134								
ODCR1			(SIGNAL)								
TF	04-026		347	PW				NOTE 49			
TF	04-058		147								
ODILP			(SIGNAL)								
TF	04-068		546	D4	G			3ONOTE 11 4A			
TF	04-058		546								
ODILQ			(SIGNAL)								
TF	04-068		450	D4	G			3ONOTE 11 4A			
TF	04-058		450								
ODIL1			(SIGNAL)								
TF	04-068		449	D4	G			3ONOTE 11 4A			
TF	04-058		449								
ODIL2			(SIGNAL)								
TF	04-068		448	D4	G			3ONOTE 11 4A			
TF	04-058		448								

NET ID TYPE	FUNCT	NET OPT DESIG	TERMINAL	COMMON NET METH PAIR	COLOR PATH	GA	INSUL	AP OPTION	PT	FN	TN CONNECTING DRAWING AND NET
ODIL3			(SIGNAL)								
TF	04-068		446	D4	G			3ONOTE 11 4A			
TF	04-058		446								
ODIL4			(SIGNAL)								
TF	04-068		445	D4	G			3ONOTE 11 4A			
TF	04-058		445								
ODIL5			(SIGNAL)								
TF	04-068		549	D4	G			3ONOTE 11 4A			
TF	04-058		549								
ODIL6			(SIGNAL)								
TF	04-068		548	D4	G			3ONOTE 11 4A			
TF	04-058		548								
ODIL7			(SIGNAL)								
TF	04-068		547	D4	G			3ONOTE 11 4A			
TF	04-058		547								
ODMARDTO			(SIGNAL)								
TF	04-068		517	D4	G			3ONOTE 11 4A			
TF	04-058		517								
ODOC1			(SIGNAL)								
TF	04-068		451	D4	G			3ONOTE 11 4A			
TF	04-058		451								
ODOP1			(SIGNAL)								
TF	04-068		452	D4	G			3ONOTE 11 4A			
TF	04-058		452								
ODOQ1			(SIGNAL)								
TF	04-068		555	D4	G			3ONOTE 11 4A			
TF	04-058		555								
ODO11			(SIGNAL)								
TF	04-068		554	D4	G			3ONOTE 11 4A			
TF	04-058		554								
ODO21			(SIGNAL)								
TF	04-068		553	D4	G			3ONOTE 11 4A			
TF	04-058		553								
ODO31			(SIGNAL)								
TF	04-068		552	D4	G			3ONOTE 11 4A			
TF	04-058		552								
ODO41			(SIGNAL)								
TF	04-068		551	D4	G			3ONOTE 11 4A			
TF	04-058		551								
ODO51			(SIGNAL)								
TF	04-068		455	D4	G			3ONOTE 11 4A			
TF	04-058		455								
ODO61			(SIGNAL)								
TF	04-068		454	D4	G			3ONOTE 11 4A			
TF	04-058		454								
ODO71			(SIGNAL)								
TF	04-068		453	D4	G			3ONOTE 11 4A			
TF	04-058		453								
ODPH			(SIGNAL)								
TF	04-078		207	PW				NOTE 49 4A			
TF	04-068		207	PW				NOTE 49 4A			
TF	04-058		207	PW				NOTE 49 4A			
TF	04-050		207	PW				NOTE 49 4A			
TF	04-042		207	PW				NOTE 49 4A			
TF	04-034		207								
ODPL			(SIGNAL)								
TF	04-078		107	PW				NOTE 49 4A			
TF	04-068		107	PW				NOTE 49 4A			
TF	04-058		107	PW				NOTE 49 4A			
TF	04-050		107	PW				NOTE 49 4A			
TF	04-042		107	PW				NOTE 49 4A			
TF	04-034		107								
ODPRO			(SIGNAL)								
TF	04-058		339	PW				NOTE 49 4A			
TF	04-026		139								
ODPR1			(SIGNAL)								
TF	04-026		352	PW				NOTE 49			
TF	04-058		152								
ODREQWR1			(SIGNAL)								
TF	04-068		518	D4	G			3ONOTE 11 4A			
TF	04-058		518								
ODRQ0			(SIGNAL)								
TF	04-078		218	PW				NOTE 49 4A			
TF	04-068		218	PW				NOTE 49 4A			
TF	04-058		218	PW				NOTE 49 4A			
TF	04-050		218	PW				NOTE 49 4A			
TF	04-042		218	PW				NOTE 49 4A			
TF	04-034		218								
ODRQ1			(SIGNAL)								
TF	04-078		219	PW				NOTE 49 4A			
TF	04-068		219	PW				NOTE 49 4A			
TF	04-058		219	PW				NOTE 49 4A			
TF	04-050		219	PW				NOTE 49 4A			
TF	04-042		219	PW				NOTE 49 4A			
TF	04-034		219								
ODRQ2			(SIGNAL)								
TF	04-078		220	PW				NOTE 49 4A			
TF	04-068		220	PW				NOTE 49 4A			
TF	04-058		220	PW				NOTE 49 4A			
TF	04-050		220	PW				NOTE 49 4A			
TF	04-042		220	PW				NOTE 49 4A			
TF	04-034		220								

NET ID TYPE	FUNCT	NET OPT DESIG	TERMINAL	COMMON NET METH PAIR	COLOR PATH	GA	INSUL	AP OPTION	PT	FN	TN CONNECTING DRAWING AND NET
ODR03			(SIGNAL)								
TF	04-078		221	PW				NOTE 49 4A			
TF	04-068		221	PW				NOTE 49 4A			
TF	04-058		221	PW				NOTE 49 4A			
TF	04-050		221	PW				NOTE 49 4A			
TF	04-042		221	PW				NOTE 49 4A			
TF	04-034		221								
ODTIB1			(SIGNAL)								
TF	04-068		539	D4	G			3ONOTE 11 4A			
TF	04-058		539								
ODTIR0			(SIGNAL)								
TF	04-068		494	D4	G			3ONOTE 11 4A			
TF	04-058		494								
ODTIR1			(SIGNAL)								
TF	04-068		440	D4	G			3ONOTE 11 4A			
TF	04-058		440								
ODTQD1			(SIGNAL)								
TF	04-068		412	D4	G			3ONOTE 11 4A			
TF	04-058		412								
ODTR0			(SIGNAL)								
TF	04-058		241	PW				NOTE 49 4A			
TF	04-026		041								
ODTR1			(SIGNAL)								
TF	04-026		254	PW				NOTE 49			
TF	04-058		054	D4	G			3ONOTE 11 4A			
TF	04-068		054								
OD0			(SIGNAL)								
TF	04-078		008	PW				NOTE 49 4A			
TF	04-068		008	PW				NOTE 49 4A			
TF	04-058		008	PW				NOTE 49 4A			
TF	04-050		008	PW				NOTE 49 4A			
TF	04-042		008	PW				NOTE 49 4A			
TF	04-034		008								
OD0R0			(SIGNAL)								
TF	04-058		340	PW				NOTE 49 4A			
TF	04-026		140								
OD0R1			(SIGNAL)								
TF	04-026		353	PW				NOTE 49			
TF	04-058		153								
OD1			(SIGNAL)								
TF	04-078		108	PW				NOTE 49 4A			
TF	04-068		108	PW				NOTE 49 4A			
TF	04-058		108	PW				NOTE 49 4A			
TF	04-050		108	PW				NOTE 49 4A			
TF	04-042		108	PW				NOTE 49 4A			
TF	04-034		108								
OD1R0			(SIGNAL)								
TF	04-058		239	PW				NOTE 49 4A			
TF	04-026		039								
OD1R1			(SIGNAL)								
TF	04-026		252	PW				NOTE 49			
TF	04-058		052								
OD10			(SIGNAL)								
TF	04-078		210	PW				NOTE 49 4A			
TF	04-068		210	PW				NOTE 49 4A			
TF	04-058		210	PW				NOTE 49 4A			
TF	04-050		210	PW				NOTE 49 4A			
TF	04-042		210	PW				NOTE 49 4A			
TF	04-034		210								
OD11			(SIGNAL)								
TF	04-078		910	PW				NOTE 49 4A			
TF	04-068		910	PW				NOTE 49 4A			
TF	04-058		910	PW				NOTE 49 4A			
TF	04-050		910	PW				NOTE 49 4A			
TF	04-042		910	PW				NOTE 49 4A			
TF	04-034		910								
OD12			(SIGNAL)								
TF	04-078		011	PW				NOTE 49 4A			
TF	04-068		011	PW				NOTE 49 4A			
TF	04-058		011	PW				NOTE 49 4A			
TF	04-050		011	PW				NOTE 49 4A			
TF	04-042		011	PW				NOTE 49 4A			
TF	04-034		011								
OD13			(SIGNAL)								
TF	04-078		111	PW				NOTE 49 4A			
TF	04-068		111	PW				NOTE 49 4A			
TF	04-058		111	PW				NOTE 49 4A			
TF	04-050		111	PW				NOTE 49 4A			
TF	04-042		111	PW				NOTE 49 4A			
TF	04-034		111								
OD14			(SIGNAL)								
TF	04-078		211	PW				NOTE 49 4A			
TF	04-068		211	PW				NOTE 49 4A			
TF	04-058		211	PW				NOTE 49 4A			
TF	04-050		211	PW				NOTE 49 4A			
TF	04-042		211	PW				NOTE 49 4A			
TF	04-034		211								
OD15			(SIGNAL)								
TF	04-078		311	PW				NOTE 49 4A			
TF	04-068		311	PW				NOTE 49 4A			
TF	04-058		311	PW				NOTE 49 4A			
TF	04-050		311	PW				NOTE 49 4A			
TF	04-042		311	PW				NOTE 49 4A			
TF	04-034		311								
OD2			(SIGNAL)								
TF	04-078		208	PW				NOTE 49 4A			
TF	04-068		208	PW				NOTE 49 4A			
TF	04-058		208	PW				NOTE 49 4A			
OD2			CONTINUED								

NET ID TYPE	FUNCT	NET OPT DESIG	TERMINAL	COMMON NET METH PAIR	COLOR PATH	GA	INSUL	AP OPTION	PT	FN	TN CONNECTING DRAWING AND NET
OD2			CONTINUED								
TF	04-050		208	PW				NOTE 49 4A			
TF	04-042		208	PW				NOTE 49 4A			
TF	04-034		208								
OD2R0			(SIGNAL)								
TF	04-058		338	PW				NOTE 49 4A			
TF	04-026		138								
OD2R1			(SIGNAL)								
TF	04-026		351	PW				NOTE 49			
TF	04-058		151								
OD9			(SIGNAL)								
TF	04-078		908	PW				NOTE 49 4A			
TF	04-068		908	PW				NOTE 49 4A			
TF	04-058		908	PW				NOTE 49 4A			
TF	04-050		908	PW				NOTE 49 4A			
TF	04-042		908	PW				NOTE 49 4A			
TF	04-034		908								
OD9R0			(SIGNAL)								
TF	04-058		237	PW				NOTE 49 4A			
TF	04-026		037								
OD9R1			(SIGNAL)								
TF	04-026		250	PW				NOTE 49			
TF	04-058		050								
OD4			(SIGNAL)								
TF	04-078		009	PW				NOTE 49 4A			
TF	04-068		009	PW				NOTE 49 4A			
TF	04-058		009	PW				NOTE 49 4A			
TF	04-050		009	PW				NOTE 49 4A			
TF	04-042		009	PW				NOTE 49 4A			
TF	04-034		009								
OD4R0			(SIGNAL)								
TF	04-058		336	PW				NOTE 49 4A			
TF	04-026		136								
OD4R1			(SIGNAL)								
TF	04-026		349	PW				NOTE 49			
TF	04-058		149								
OD5			(SIGNAL)								
TF	04-078		109	PW				NOTE 49 4A			
TF	04-068		109	PW				NOTE 49 4A			
TF	04-058		109	PW				NOTE 49 4A			
TF	04-050		109	PW				NOTE 49 4A			
TF	04-042		109	PW				NOTE 49 4A			
TF	04-034		109								
OD5R0			(SIGNAL)								
TF	04-058		296	PW				NOTE 49 4A			
TF	04-026		096								
OD5R1			(SIGNAL)								
TF	04-026		249	PW				NOTE 49			
TF	04-058		049								
OD6			(SIGNAL)								
TF	04-078		209	PW				NOTE 49 4A			
TF	04-068		209	PW				NOTE 49 4A			
TF	04-058		209	PW				NOTE 49 4A			
TF	04-050		209	PW				NOTE 49 4A			
TF	04-042		209	PW				NOTE 49 4A			
TF	04-034		209								
OD6R0			(SIGNAL)								
TF	04-058		335	PW				NOTE 49 4A			
TF	04-026		135								
OD6R1			(SIGNAL)								
TF	04-026		348	PW				NOTE 49			
TF	04-058		148								
OD7			(SIGNAL)								
TF	04-078		309	PW				NOTE 49 4A			
TF	04-068		309	PW				NOTE 49 4A			
TF	04-058		309	PW				NOTE 49 4A			
TF	04-050		309	PW				NOTE 49 4A			
TF	04-042		309	PW				NOTE 49 4A			
TF	04-034		309								
OD7R0			(SIGNAL)								
TF	04-058		234	PW				NOTE 49 4A			
TF	04-026		034								
OD7R1			(SIGNAL)								
TF	04-026		247	PW				NOTE 49			
TF	04-058		047								
OD8			(SIGNAL)								
TF	04-078		010	PW				NOTE 49 4A			
TF	04-068		010	PW				NOTE 49 4A			
TF	04-058		010	PW				NOTE 49 4A			
TF	04-050		010	PW				NOTE 49 4A			
TF	04-042		010	PW				NOTE 49 4A			
TF	04-034		010								
OD9			(SIGNAL)								
TF	04-078		110	PW				NOTE 49 4A			
TF	04-068		110	PW				NOTE 49 4A			
TF	04-058		110	PW				NOTE 49 4A			
TF	04-050		110	PW				NOTE 49 4A			
TF	04-042		110	PW				NOTE 49 4A			
TF	04-034		110								

NET ID	NET OPT		COMMON NET							
TYPE	FUNCT	DESIG	TERMINAL PAIR	METH	COLOR	GA	INSUL	AP OPTION	PT	FN TN
CONNECTING DRAWING AND NET										

QEOP			(SIGNAL)							
TF	04-078	217		PW				NOTE 49 4A		
TF	04-068	217		PW				NOTE 49 4A		
TF	04-058	217		PW				NOTE 49 4A		
TF	04-050	217		PW				NOTE 49 4A		
TF	04-042	217		PW				NOTE 49 4A		
TF	04-034	217								
QFPROPB0			(SIGNAL)							
TF	04-068	417		D4	G			90NOTE 11 4A		
TF	04-058	417								
QFREADB0			(SIGNAL)							
TF	04-068	410		D4	G			90NOTE 11 4A		
TF	04-058	410								
QID0			(SIGNAL)							
TF	04-034	334		PW				NOTE 49		
TF	04-058	119		D4	G			90NOTE 11 4A		
TF	04-068	119								
QID1			(SIGNAL)							
TF	04-034	335		PW				NOTE 49		
TF	04-058	119		D4	G			90NOTE 11 4A		
TF	04-068	119								
QID2			(SIGNAL)							
TF	04-034	336		PW				NOTE 49		
TF	04-058	020		D4	G			90NOTE 11 4A		
TF	04-068	020								
QID3			(SIGNAL)							
TF	04-034	337		PW				NOTE 49		
TF	04-058	120		D4	G			90NOTE 11 4A		
TF	04-068	120								
QID4			(SIGNAL)							
TF	04-034	338		PW				NOTE 49		
TF	04-058	021		D4	G			90NOTE 11 4A		
TF	04-068	021								
QID5			(SIGNAL)							
TF	04-034	339		PW				NOTE 49		
TF	04-058	121		D4	G			90NOTE 11 4A		
TF	04-068	121								
QID6			(SIGNAL)							
TF	04-034	340		PW				NOTE 49		
TF	04-058	022		D4	G			90NOTE 11 4A		
TF	04-068	022								
QID7			(SIGNAL)							
TF	04-034	341		PW				NOTE 49		
TF	04-058	122		D4	G			90NOTE 11 4A		
TF	04-068	122								
QID8			(SIGNAL)							
TF	04-034	342		PW				NOTE 49		
TF	04-058	029		D4	G			90NOTE 11 4A		
TF	04-068	029								
QID9			(SIGNAL)							
TF	04-034	343		PW				NOTE 49		
TF	04-058	123		D4	G			90NOTE 11 4A		
TF	04-068	123								
QIHBTIB0			(SIGNAL)							
TF	04-068	510		D4	G			90NOTE 11 4A		
TF	04-058	510								
QIIFBI			(SIGNAL)							
TF	04-026	043		PW				NOTE 49		
TF	04-058	043								
QIMR0			(SIGNAL)							
TF	04-026	145		PW				NOTE 49		
TF	04-058	139								
QINACT0			(SIGNAL)							
TF	04-058	405		D4	G			90NOTE 11 4A		
TF	04-068	405								
QINACT1			(SIGNAL)							
TF	04-058	505		D4	G			90NOTE 11 4A		
TF	04-068	505								
QIPRES			(SIGNAL)							
TF	04-026	243		PW				NOTE 49		
TF	04-058	243		D4	G			90NOTE 11 4A		
TF	04-068	243								
QIRQ0			(SIGNAL)							
TF	04-03	116		PW				NOTE 49		
TF	04-058	116		D4	G			90NOTE 11 4A		
TF	04-068	116								
QIRQ1			(SIGNAL)							
TF	04-034	016		PW				NOTE 49		
TF	04-058	016		D4	G			90NOTE 11 4A		
TF	04-068	016								
QIRQ2			(SIGNAL)							
TF	04-078	117		PW				NOTE 49		
TF	04-050	117		PW				NOTE 49		
TF	04-034	117								
QIRQ3			(SIGNAL)							
TF	04-078	017		PW				NOTE 49		
TF	04-050	017		PW				NOTE 49		
TF	04-034	017								
QIRQ4			(SIGNAL)							
TF	04-034	118		PW				NOTE 49		
TF	04-042	117								

QIRQ5			(SIGNAL)							
TF	04-034	018		PW				NOTE 49		
TF	04-042	017								
QISOLB			(SIGNAL)							
TF	04-068	519		D4	G			90NOTE 11 4A		
TF	04-058	519								
QMIQ			(SIGNAL)							
TF	04-078	216		PW				NOTE 49 4A		
TF	04-068	216		PW				NOTE 49 4A		
TF	04-058	216		PW				NOTE 49 4A		
TF	04-050	216		PW				NOTE 49 4A		
TF	04-042	216		PW				NOTE 49 4A		
TF	04-034	216								
QMPN			(SIGNAL)							
TF	04-034	333		PW				NOTE 49		
TF	04-058	222		D4	G			90NOTE 11 4A		
TF	04-068	222								
QNCRDYQ			(SIGNAL)							
TF	04-068	423		D4	G			90NOTE 11 4A		
TF	04-058	423								
QNCRDY1			(SIGNAL)							
TF	04-068	420		D4	G			90NOTE 11 4A		
TF	04-058	420								
QNG0			(GROUND)							
TF	04-078	215		PW				NOTE 49 4A		
TF	04-068	215		PW				NOTE 49 4A		
TF	04-058	215		PW				NOTE 49 4A		
TF	04-050	215		PW				NOTE 49 4A		
TF	04-042	215		PW				NOTE 49 4A		
TF	04-03.	215								
QNG1			(GROUND)							
TF	04-078	214		PW				NOTE 49 4A		
TF	04-068	214		PW				NOTE 49 4A		
TF	04-058	214		PW				NOTE 49 4A		
TF	04-050	214		PW				NOTE 49 4A		
TF	04-042	214		PW				NOTE 49 4A		
TF	04-034	214								
QNG2			(GROUND)							
TF	04-078	213		PW				NOTE 49 4A		
TF	04-068	213		PW				NOTE 49 4A		
TF	04-058	213		PW				NOTE 49 4A		
TF	04-050	213		PW				NOTE 49 4A		
TF	04-042	213		PW				NOTE 49 4A		
TF	04-034	213								
QNG3			(GROUND)							
TF	04-078	212		PW				NOTE 49 4A		
TF	04-068	212		PW				NOTE 49 4A		
TF	04-058	212		PW				NOTE 49 4A		
TF	04-050	212		PW				NOTE 49 4A		
TF	04-042	212		PW				NOTE 49 4A		
TF	04-034	212								
QNG4			(GROUND)							
TF	04-078	015		PW				NOTE 49 4A		
TF	04-068	015		PW				NOTE 49 4A		
TF	04-058	015		PW				NOTE 49 4A		
TF	04-050	015		PW				NOTE 49 4A		
TF	04-042	015		PW				NOTE 49 4A		
TF	04-034	015								
QNG5			(GROUND)							
TF	04-078	014		PW				NOTE 49 4A		
TF	04-068	014		PW				NOTE 49 4A		
TF	04-058	014		PW				NOTE 49 4A		
TF	04-050	014		PW				NOTE 49 4A		
TF	04-042	014		PW				NOTE 49 4A		
TF	04-034	014								
QNG6			(GROUND)							
TF	04-078	013		PW				NOTE 49 4A		
TF	04-068	013		PW				NOTE 49 4A		
TF	04-058	013		PW				NOTE 49 4A		
TF	04-050	013		PW				NOTE 49 4A		
TF	04-042	013		PW				NOTE 49 4A		
TF	04-034	013								
QNG7			(GROUND)							
TF	04-078	907		PW				NOTE 49 4A		
TF	04-068	907		PW				NOTE 49 4A		
TF	04-058	907		PW				NOTE 49 4A		
TF	04-050	907		PW				NOTE 49 4A		
TF	04-042	907		PW				NOTE 49 4A		
TF	04-034	907								
QNG8			(GROUND)							
TF	04-078	012		PW				NOTE 49 4A		
TF	04-068	012		PW				NOTE 49 4A		
TF	04-058	012		PW				NOTE 49 4A		
TF	04-050	012		PW				NOTE 49 4A		
TF	04-042	012		PW				NOTE 49 4A		
TF	04-034	012								
QNPPF			(SIGNAL)							
TF	04-078	317		PW				NOTE 49 4A		
TF	04-068	317		PW				NOTE 49 4A		
TF	04-058	317		PW				NOTE 49 4A		
TF	04-050	317		PW				NOTE 49 4A		
TF	04-042	317		PW				NOTE 49 4A		
TF	04-034	317								
QNPRESET0			(SIGNAL)							
TF	04-068	411		D4	G			90NOTE 11 4A		
TF	04-058	411								
QORPHBYT			(SIGNAL)							
TF	04-068	541		D4	G			90NOTE 11 4A		
TF	04-058	541								

QPEN			(SIGNAL)							
TF	04-078	113		PW				NOTE 49 4A		
TF	04-068	113		PW				NOTE 49 4A		
TF	04-058	113		PW				NOTE 49 4A		
TF	04-050	113		PW				NOTE 49 4A		
TF	04-042	113		PW				NOTE 49 4A		
TF	04-034	113								
QPIFB0			(SIGNAL)							
TF	04-026	143		PW				NOTE 49		
TF	04-058	143		D4	G			90NOTE 11 4A		
TF	04-068	143								
QPRCRST0			(SIGNAL)							
TF	04-068	514		D4	G			90NOTE 11 4A		
TF	04-058	514								
QPRSTI			(SIGNAL)							
TF	04-026	045		PW				NOTE 49		
TF	04-058	333		D4	G			90NOTE 11 4A		
TF	04-068	333								
QPTYERR0			(SIGNAL)							
TF	04-068	544		D4	G			90NOTE 11 4A		
TF	04-058	544								
QPWRESET			(SIGNAL)							
TF	04-068	441		D4	G			90NOTE 11 4A		
TF	04-058	441								
QPWRB0			(SIGNAL)							
TF	04-068	538		D4	G			90NOTE 11 4A		
TF	04-058	538								
QPWRT0			(SIGNAL)							
TF	04-058	404		D4	G			90NOTE 11 4A		
TF	04-068	404								
QQUAR			(SIGNAL)							
TF	04-058	408		D4	G			90NOTE 11 4A		
TF	04-068	408								
QQUARA			(SIGNAL)							
TF	04-034	020		D4	G			90NOTE 11 4A		
TF	04-050	020		D4	G			90NOTE 11 2B		
TF	04-058	018		D4	G			90NOTE 11 4A		
TF	04-068	018								
QRACRST0			(SIGNAL)							
TF	04-068	409		D4	G			90NOTE 11 4A		
TF	04-058	409								
QRACRST1			(SIGNAL)							
TF	04-068	516		D4	G			90NOTE 11 4A		
TF	04-058	516								
QRD			(SIGNAL)							
TF	04-078	314		PW				NOTE 49 4A		
TF	04-068	314		PW				NOTE 49 4A		
TF	04-058	314		PW				NOTE 49 4A		
TF	04-050	314		PW				NOTE 49 4A		
TF	04-042	314		PW				NOTE 49 4A		
TF	04-034	314								
QRDFULL			(SIGNAL)							
TF	04-068	422		D4	G			90NOTE 11 4A		
TF	04-058	422								
QRDIMBT0			(SIGNAL)							
TF	04-068	436		D4	G			90NOTE 11 4A		
TF	04-058	436								
QRDIPQ			(SIGNAL)							
TF	04-058	407		D4	G			90NOTE 11 4A		
TF	04-068	407								
QRDIPI			(SIGNAL)							
TF	04-058	507		D4	G			90NOTE 11 4A		
TF	04-068	507								
QRDIS			(SIGNAL)							
TF	04-078	312		PW				NOTE 49 4A		
TF	04-068	312		PW				NOTE 49 4A		
TF	04-058	312		PW				NOTE 49 4A		
TF	04-050	312		PW				NOTE 49 4A		
TF	04-042	312		PW				NOTE 49 4A		
TF	04-034	312								
QRDTC			(SIGNAL)							
TF	04-068	513		D4	G			90NOTE 11 4A		
TF	04-058	513								
QRDTOD			(SIGNAL)							
TF	04-068	499		D4	G			90NOTE 11 4A		
TF	04-058	499								
QRESET			(SIGNAL)							
TF	04-078	322		PW				NOTE 49 4A		
TF	04-068	322		PW				NOTE 49 4A		
TF	04-058	322		PW				NOTE 49 4A		
TF	04-050	322		PW				NOTE 49 4A		
TF	04-042	322		PW				NOTE 49 4A		
TF	04-034	322								
QRGCMD0			(SIGNAL)							
TF	04-068	536		D4	G			90NOTE 11 4A		
TF	04-058	536								
QRGD0			(GROUND)							
TF	04-026	255		PW				NOTE 49		
TF	04-058	055		D4	G			90NOTE 11 4A		
TF	04-068	055								
QRGD1			(GROUND)							
TF	04-026	354		PW				NOTE 49		
TF	04-058	154		D4	G			90NOTE 11 4A		
TF	04-068	154								

QRGD2			(GROUND)							
TF	04-026	253		PW				NOTE 49		
TF	04-058	053								
QRGD3			(GROUND)							
TF	04-026	251		PW				NOTE 49		
TF	04-058	051								
QRGD4			(GROUND)							
TF	04-026	350		PW				NOTE 49		
TF	04-058	150								
QRGD5			(GROUND)							
TF	04-026	248		PW				NOTE 49		
TF	04-058	048								
QRGD6			(GROUND)							
TF	04-026	246		PW				NOTE 49		
TF	04-058	046								
QRGD7			(GROUND)							
TF	04-058	242		PW				NOTE 49 4A		
TF	04-026	042								
QRGD8			(GROUND)							
TF	04-058	341		PW				NOTE 49 4A		
TF	04-026	141								
QRGD9			(GROUND)							
TF	04-058	240		PW				NOTE 49 4A		
TF	04-026	040								
QRGD10			(GROUND)							
TF	04-058	238		PW				NOTE 49 4A		
TF	04-026	038								
QRGD11			(GROUND)							
TF	04-058	337		PW				NOTE 49 4A		
TF	04-026	137								
QRGD12			(GROUND)							
TF	04-058	235		PW				NOTE 49 4A		
TF	04-026	035								
QRGD13			(GROUND)							
TF	04-058	233		PW				NOTE 49 4A		
TF	04-026	033								
QRINGSM0			(SIGNAL)							
TF	04-068	537		D4	G			90NOTE 11 4A		
TF	04-058	537								
QRRSTSI			(SIGNAL)							
TF	04-068	515		D4	G			90NOTE 11 4A		
TF	04-058	515								
QRS			(SIGNAL)							
TF	04-018	011		D4	G			90NOTE 11 1A		
TF	04-018	110								
QRW			(SIGNAL)							
TF	04-078	316		PW				NOTE 49 4A		
TF	04-068	316		PW				NOTE 49 4A		
TF	04-058	316		PW				NOTE 49 4A		
TF	04-050	316		PW				NOTE 49 4A		
TF	04-042	316		PW				NOTE 49 4A		
TF	04-034	316								
QSA			(SIGNAL)							
TF	04-018	018		D4	G			90NOTE 11 1B		
TF	04-018	019								
QSANE			(SIGNAL)							
TF	04-078	323		PW				NOTE 49 4A		
TF	04-068	323		PW				NOTE 49 4A		
TF	04-058	323		PW				NOTE 49 4A		
TF	04-050	323		PW				NOTE 49 4A		
TF	04-042	323		PW				NOTE 49 4A		
TF	04-034	323								
QSBCAST0			(SIGNAL)							
TF	04-068	521		D4	G			90NOTE 11 4A		
TF	04-058	521								
QSISOL0			(SIGNAL)							
TF	04-068	442		D4	G			90NOTE 11 4A		
TF	04-058	442								
QSMIB			(SIGNAL)							
TF	04-068	421		D4	G			90NOTE 11 4A		
TF	04-058	421								
QSP1			(SIGNAL)							
TF	04-058	401		D4	G			90NOTE 11 4A		
TF	04-068	401								
QSP2			(SIGNAL)							
TF	04-068	406		D4	G			90NOTE 11 4A		
TF	04-058	406								
QSP3			(SIGNAL)							
TF	04-068	496		D4	G			90NOTE 11 4A		
TF	04-058	496								
QSP4			(SIGNAL)							
TF	04-068	413		D4	G			90NOTE 11 4A		
TF	04-058	413								

WESTERN ELECTRIC CO., INC. PRINTED IN USA		DWG SIZE C2
T*3F008-11	SHEET C4	ISSUE 3

NET ID	NET OPT			COMMON NET				
TYPE	FUNCT	DESIG	TERMINAL PAIR	METH PATH	COLOR	GA	INSUL	AP OPTION PT FN TN CONNECTING DRAWING AND NET
0SQUARQ				(SIGNAL)				
TF	04-068	444		D4	G			3DNOTE 11 4A
TF	04-058	444						
0STW				(SIGNAL)				
TF	04-078	229		PW				NOTE 49 4A
TF	04-068	229		PW				NOTE 49 4A
TF	04-058	229		PW				NOTE 49 4A
TF	04-050	229		PW				NOTE 49 4A
TF	04-042	229		PW				NOTE 49 4A
TF	04-034	229						
0TOKDAQ				(SIGNAL)				
TF	04-058	506		D4	G			3DNOTE 11 4A
TF	04-068	506						
0TOOSHRT				(SIGNAL)				
TF	04-068	542		D4	G			3DNOTE 11 4A
TF	04-058	542						
0TPI				(SIGNAL)				
TF	04-058	509		D4	G			3DNOTE 11 4A
TF	04-068	509						
0TWRQQ				(SIGNAL)				
TF	04-068	498		D4	G			3DNOTE 11 4A
TF	04-058	498						
0TWRTQ				(SIGNAL)				
TF	04-058	504		D4	G			3DNOTE 11 4A
TF	04-068	504						
0TQI				(SIGNAL)				
TF	04-034	346		D4	G			3DNOTE 11 1B
TF	04-034	347						
0UNCKQ				(SIGNAL)				
TF	04-068	437		D4	G			3DNOTE 11 4A
TF	04-058	437						
0WAIT				(SIGNAL)				
TF	04-078	313		PW				NOTE 49 4A
TF	04-068	313		PW				NOTE 49 4A
TF	04-058	313		PW				NOTE 49 4A
TF	04-050	313		PW				NOTE 49 4A
TF	04-042	313		PW				NOTE 49 4A
TF	04-034	313						
0WR				(SIGNAL)				
TF	04-078	114		PW				NOTE 49 4A
TF	04-068	114		PW				NOTE 49 4A
TF	04-058	114		PW				NOTE 49 4A
TF	04-050	114		PW				NOTE 49 4A
TF	04-042	114		PW				NOTE 49 4A
TF	04-034	114						
0WRABEND				(SIGNAL)				
TF	04-068	535		D4	G			3DNOTE 11 4A
TF	04-058	535						
0WREMPTY				(SIGNAL)				
TF	04-068	433		D4	G			3DNOTE 11 4A
TF	04-058	433						
0WRSMERR				(SIGNAL)				
TF	04-068	539		D4	G			3DNOTE 11 4A
TF	04-058	539						
0XINT0				(SIGNAL)				
TF	04-050	119		PW				NOTE 49
TF	04-034	119						
0XINT1				(SIGNAL)				
TF	04-042	119		PW				NOTE 49
TF	04-034	019						
1CPR1				(SIGNAL)				
TF	04-178	017		PW				NOTE 49 2C
TF	04-162	002		PW				NOTE 49 4A
TF	04-152	502		PW				NOTE 49 4A
TF	04-142	502		PW				NOTE 49 4A
TF	04-134	002		PW				NOTE 49 4A
TF	04-126	002		PW				NOTE 49 4A
TF	04-118	002						
1CPR2				(SIGNAL)				
TF	04-178	117		PW				NOTE 49 2C
TF	04-162	201		PW				NOTE 49 4A
TF	04-152	503		PW				NOTE 49 4A
TF	04-142	503		PW				NOTE 49 4A
TF	04-134	201		PW				NOTE 49 4A
TF	04-126	201		PW				NOTE 49 4A
TF	04-118	201						
1DAR1				(SIGNAL)				
TF	04-068	355		D4	G			3DNOTE 11 4A
TF	04-058	355						
1DCR1				(SIGNAL)				
TF	04-068	347		D4	G			3DNOTE 11 4A
TF	04-058	347						
1DPR1				(SIGNAL)				
TF	04-068	352		D4	G			3DNOTE 11 4A
TF	04-058	352						
1DTR1				(SIGNAL)				
TF	04-068	254		D4	G			3DNOTE 11 4A
TF	04-058	254						
1DOR1				(SIGNAL)				
TF	04-068	353		D4	G			3DNOTE 11 4A
TF	04-058	353						
1Q1R1				(SIGNAL)				
TF	04-068	252		D4	G			3DNOTE 11 4A
TF	04-058	252						

NET ID	NET OPT			COMMON NET				
TYPE	FUNCT	DESIG	TERMINAL PAIR	METH PATH	COLOR	GA	INSUL	AP OPTION PT FN TN CONNECTING DRAWING AND NET
1D2R1				(SIGNAL)				
TF	04-068	351		D4	G			3DNOTE 11 4A
TF	04-058	351						
1D3R1				(SIGNAL)				
TF	04-068	250		D4	G			3DNOTE 11 4A
TF	04-058	250						
1D4R1				(SIGNAL)				
TF	04-068	349		D4	G			3DNOTE 11 4A
TF	04-058	349						
1D5R1				(SIGNAL)				
TF	04-068	249		D4	G			3DNOTE 11 4A
TF	04-058	249						
1D6R1				(SIGNAL)				
TF	04-068	348		D4	G			3DNOTE 11 4A
TF	04-058	348						
1D7R1				(SIGNAL)				
TF	04-068	247		D4	G			3DNOTE 11 4A
TF	04-058	247						
1IIFBI				(SIGNAL)				
TF	04-162	043		PW				NOTE 49
TF	04-142	045		D4	G			3DNOTE 11 4A
TF	04-152	045						
1IMR0				(SIGNAL)				
TF	04-162	145		PW				NOTE 49
TF	04-142	146		D4	G			3DNOTE 11 4A
TF	04-152	146						
1IPRE5				(SIGNAL)				
TF	04-162	243		PW				NOTE 49
TF	04-142	245		D4	G			3DNOTE 11 4A
TF	04-152	245						
1PIFB0				(SIGNAL)				
TF	04-162	143		PW				NOTE 49
TF	04-142	145		D4	G			3DNOTE 11 4A
TF	04-152	145						
1PRST1				(SIGNAL)				
TF	04-162	045		PW				NOTE 49
TF	04-142	946		D4	G			3DNOTE 11 4A
TF	04-152	946						
1RG00				(GROUND)				
TF	04-068	255		D4	G			3DNOTE 11 4A
TF	04-058	255						
1RG01				(GROUND)				
TF	04-068	354		D4	G			3DNOTE 11 4A
TF	04-058	354						
1RG02				(GROUND)				
TF	04-068	253		D4	G			3DNOTE 11 4A
TF	04-058	253						
1RG03				(GROUND)				
TF	04-068	251		D4	G			3DNOTE 11 4A
TF	04-058	251						
1RG04				(GROUND)				
TF	04-068	350		D4	G			3DNOTE 11 4A
TF	04-058	350						
1RG05				(GROUND)				
TF	04-068	248		D4	G			3DNOTE 11 4A
TF	04-058	248						
1RG06				(GROUND)				
TF	04-068	246		D4	G			3DNOTE 11 4A
TF	04-058	246						
1RS				(SIGNAL)				
TF	04-178	011		D4	G			3DNOTE 11 1A
TF	04-178	110						
1SA				(SIGNAL)				
TF	04-178	018		D4	G			3DNOTE 11 1B
TF	04-178	019						
1XINT0				(SIGNAL)				
TF	04-134	119		PW				NOTE 49 4A
TF	04-118	119						
1XINT1				(SIGNAL)				
TF	04-126	119		PW				NOTE 49 4A
TF	04-118	019						
2A0				(SIGNAL)				
TF	04-152	901		PW				NOTE 49 4A
TF	04-142	901		PW				NOTE 49 4A
TF	04-134	901		PW				NOTE 49 4A
TF	04-126	901		PW				NOTE 49 4A
TF	04-118	901						
2A1				(SIGNAL)				
TF	04-152	102		PW				NOTE 49 4A
TF	04-142	102		PW				NOTE 49 4A
TF	04-134	102		PW				NOTE 49 4A
TF	04-126	102		PW				NOTE 49 4A
TF	04-118	102						
2A10				(SIGNAL)				
TF	04-152	204		PW				NOTE 49 4A
TF	04-142	204		PW				NOTE 49 4A
TF	04-134	204		PW				NOTE 49 4A
TF	04-126	204		PW				NOTE 49 4A
TF	04-118	204						
2A11				(SIGNAL)				
TF	04-152	904		PW				NOTE 49 4A
TF	04-142	904		PW				NOTE 49 4A
2A11				CONTINUED				

NET ID	NET OPT			COMMON NET				
TYPE	FUNCT	DESIG	TERMINAL PAIR	METH PATH	COLOR	GA	INSUL	AP OPTION PT FN TN CONNECTING DRAWING AND NET
2A11				CONTINUED				
TF	04-134	904		PW				NOTE 49 4A
TF	04-126	904		PW				NOTE 49 4A
TF	04-118	904						
2A12				(SIGNAL)				
TF	04-152	005		PW				NOTE 49 4A
TF	04-142	005		PW				NOTE 49 4A
TF	04-134	005		PW				NOTE 49 4A
TF	04-126	005		PW				NOTE 49 4A
TF	04-118	005						
2A13				(SIGNAL)				
TF	04-152	105		PW				NOTE 49 4A
TF	04-142	105		PW				NOTE 49 4A
TF	04-134	105		PW				NOTE 49 4A
TF	04-126	105		PW				NOTE 49 4A
TF	04-118	105						
2A14				(SIGNAL)				
TF	04-152	205		PW				NOTE 49 4A
TF	04-142	205		PW				NOTE 49 4A
TF	04-134	205		PW				NOTE 49 4A
TF	04-126	205		PW				NOTE 49 4A
TF	04-118	205						
2A15				(SIGNAL)				
TF	04-152	305		PW				NOTE 49 4A
TF	04-142	305		PW				NOTE 49 4A
TF	04-134	305		PW				NOTE 49 4A
TF	04-126	305		PW				NOTE 49 4A
TF	04-118	305						
2A16				(SIGNAL)				
TF	04-152	006		PW				NOTE 49 4A
TF	04-142	006		PW				NOTE 49 4A
TF	04-134	006		PW				NOTE 49 4A
TF	04-126	006		PW				NOTE 49 4A
TF	04-118	006						
2A17				(SIGNAL)				
TF	04-152	106		PW				NOTE 49 4A
TF	04-142	106		PW				NOTE 49 4A
TF	04-134	106		PW				NOTE 49 4A
TF	04-126	106		PW				NOTE 49 4A
TF	04-118	106						
2A18				(SIGNAL)				
TF	04-152	206		PW				NOTE 49 4A
TF	04-142	206		PW				NOTE 49 4A
TF	04-134	206		PW				NOTE 49 4A
TF	04-126	206		PW				NOTE 49 4A
TF	04-118	206						
2A19				(SIGNAL)				
TF	04-152	306		PW				NOTE 49 4A
TF	04-142	306		PW				NOTE 49 4A
TF	04-134	306		PW				NOTE 49 4A
TF	04-126	306		PW				NOTE 49 4A
TF	04-118	306						
2A2				(SIGNAL)				
TF	04-152	202		PW				NOTE 49 4A
TF	04-142	202		PW				NOTE 49 4A
TF	04-134	202		PW				NOTE 49 4A
TF	04-126	202		PW				NOTE 49 4A
TF	04-118	202						
2A3				(SIGNAL)				
TF	04-152	302		PW				NOTE 49 4A
TF	04-142	302		PW				NOTE 49 4A
TF	04-134	302		PW				NOTE 49 4A
TF	04-126	302		PW				NOTE 49 4A
TF	04-118	302						
2A4				(SIGNAL)				
TF	04-152	009		PW				NOTE 49 4A
TF	04-142	009		PW				NOTE 49 4A
TF	04-134	009		PW				NOTE 49 4A
TF	04-126	009		PW				NOTE 49 4A
TF	04-118	009						
2A5				(SIGNAL)				
TF	04-152	109		PW				NOTE 49 4A
TF	04-142	109		PW				NOTE 49 4A
TF	04-134	109		PW				NOTE 49 4A
TF	04-126	109		PW				NOTE 49 4A
TF	04-118	109						
2A6				(SIGNAL)				
TF	04-152	209		PW				NOTE 49 4A
TF	04-142	209		PW				NOTE 49 4A
TF	04-134	209		PW				NOTE 49 4A
TF	04-126	209		PW				NOTE 49 4A
TF	04-118	209						
2A7				(SIGNAL)				
TF	04-152	309		PW				NOTE 49 4A
TF	04-142	309		PW				NOTE 49 4A
TF	04-134	309		PW				NOTE 49 4A
TF	04-126	309		PW				NOTE 49 4A
TF	04-118	309						
2A8				(SIGNAL)				
TF	04-152	004		PW				NOTE 49 4A
TF	04-142	004		PW				NOTE 49 4A
TF	04-134	004		PW				NOTE 49 4A
TF	04-126	004		PW				NOTE 49 4A
TF	04-118	004						
2A9				(SIGNAL)				
TF	04-152	104		PW				NOTE 49 4A
TF	04-142	104		PW				NOTE 49 4A
TF	04-134	104		PW				NOTE 49 4A
TF	04-126	104		PW				NOTE 49 4A
TF	04-118	104						

NET ID	NET OPT			COMMON NET				
TYPE	FUNCT	DESIG	TERMINAL PAIR	METH PATH	COLOR	GA	INSUL	AP OPTION PT FN TN CONNECTING DRAWING AND NET
2BHE				(SIGNAL)				
TF	04-152	007		PW				NOTE 49 4A
TF	04-142	007		PW				NOTE 49 4A
TF	04-134	007		PW				NOTE 49 4A
TF	04-126	007		PW				NOTE 49 4A
TF	04-118	007						
2BLKDS1				(SIGNAL)				
TF	04-152	415		D4	G			3DNOTE 11 4A
TF	04-142	415						
2BLKDI				(SIGNAL)				
TF	04-152	416		D4	G			3DNOTE 11 4A
TF	04-142	416						
2BLKTOB				(SIGNAL)				
TF	04-152	418		D4	G			3DNOTE 11 4A
TF	04-142	418						
2BLKQ				(SIGNAL)				
TF	04-152	543		D4	G			3DNOTE 11 4A
TF	04-142	543						
2CBLKQ				(SIGNAL)				
TF	04-142	403		D4	G			3DNOTE 11 4A
TF	04-152	403						
2CCLK				(SIGNAL)				
TF	04-152	315		PW				NOTE 49 4A
TF	04-142	315		PW				NOTE 49 4A
TF	04-134	315		PW				NOTE 49 4A
TF	04-126	315		PW				NOTE 49 4A
TF	04-118	315						
2CI				(SIGNAL)				
TF	04-152	343		D4	G			3DNOTE 11 4A
TF	04-142	343						
2CIERRO				(SIGNAL)				
TF	04-152	540		D4	G			3DNOTE 11 4A
TF	04-142	540						
2CI50LO				(SIGNAL)				
TF	04-152	443		D4	G			3DNOTE 11 4A
TF	04-142	443						
2CLRERRO				(SIGNAL)				
TF	04-142	402		D4	G			3DNOTE 11 4A
TF	04-152	402						
2CLRQUAR				(SIGNAL)				
TF	04-152	545		D4	G			3DNOTE 11 4A
TF	04-142	545						
2CQ				(SIGNAL)				
TF	04-152	345		D4	G			3DNOTE 11 4A
TF	04-142	345						
2CRDYQ				(SIGNAL)				
TF	04-152	523		D4	G			3DNOTE 11 4A
TF	04-142	523						
2CRDYI				(SIGNAL)				
TF	04-152	520		D4	G			3DNOTE 11 4A
TF	04-142	520						
2DAIOB				(SIGNAL)				
TF	04-152	522		D4	G			3DNOTE 11 4A
TF	04-142	522						
2DAKQ				(SIGNAL)				
TF	04-152	318		PW				NOTE 49 4A
TF	04-142	318		PW				NOTE 49 4A
TF	04-134	318		PW				NOTE 49 4A
TF	04-126	318		PW				NOTE 49 4A
TF	04-118	318						
2DAKI				(SIGNAL)				
TF	04-152	319		PW				NOTE 49 4A
TF	04-142	319		PW				NOTE 49 4A
TF	04-134	319		PW				NOTE 49 4A
TF	04-126	319		PW				NOTE 49 4A
TF	04-118	319						
2DAK2				(SIGNAL)				
TF	04-152	320		PW				NOTE 49 4A
TF	04-142	320		PW				NOTE 49 4A
TF	04-134	320		PW				NOTE 49 4A
TF	04-126	320		PW				NOTE 49 4A
TF	04-118	320						
2DAK3				(SIGNAL)				
TF	04-152	321		PW				NOTE 49 4A
TF	04-142	321		PW				NOTE 49 4A
TF	04-134	321		PW				NOTE 49 4A
TF	04-126	321		PW				NOTE 49 4A
TF	04-118	321						
2DAOD1				(SIGNAL)				
TF	04-152	512		D4	G			3DNOTE 11 4A
TF	04-142	512						
2DAORO				(SIGNAL)				
TF	04-152	534		D4	G			3DNOTE 11 4A
TF	04-142	534						

WESTERN ELECTRIC CO., INC. PRINTED IN USA		DWG SIZE C2
T*3F008-11	SHEET C5	ISSUE 3

NET ID TYPE	NET OPT FUNCT	DESIG	COMMON NET TERMINAL PAIR	METH PATH	COLOR	GA INSUL	AP OPTION	PT FN TN CONNECTING DRAWING AND NET
2DA0R1			(SIGNAL)					
TF	04-152	511		D4	G			9DNOTE 11 4A
TF	04-142	511						
2DAR0			(SIGNAL)					
TF	04-162	355		D4	G			9DNOTE 11 4B
TF	04-162	342		PW				NOTE 49 4A
TF	04-142	142						
2DAR1			(SIGNAL)					
TF	04-162	#155		PW				NOTE 49 4A
TF	04-142	355		D4	G			9DNOTE 11 4A
TF	04-152	355						
TF	04-162	155		D4	G			9DNOTE 11 4B
TF	04-162	142						
2DA1A			(SIGNAL)					
TF	04-152	155		PW				NOTE 49
TF	04-142	155						
2DCLK			(SIGNAL)					
TF	04-152	115		PW				NOTE 49 4A
TF	04-142	115		PW				NOTE 49 4A
TF	04-134	115		PW				NOTE 49 4A
TF	04-126	115		PW				NOTE 49 4A
TF	04-118	115						
2DCR0			(SIGNAL)					
TF	04-162	347		D4	G			9DNOTE 11 4B
TF	04-162	334		PW				NOTE 49 4A
TF	04-142	134						
2DCR1			(SIGNAL)					
TF	04-162	#147		PW				NOTE 49 4A
TF	04-142	347		D4	G			9DNOTE 11 4A
TF	04-152	347						
TF	04-162	147		D4	G			9DNOTE 11 4B
TF	04-162	134						
2DILP			(SIGNAL)					
TF	04-152	546		D4	G			9DNOTE 11 4A
TF	04-142	546						
2DILQ			(SIGNAL)					
TF	04-152	450		D4	G			9DNOTE 11 4A
TF	04-142	450						
2DIL1			(SIGNAL)					
TF	04-152	449		D4	G			9DNOTE 11 4A
TF	04-142	449						
2DIL2			(SIGNAL)					
TF	04-152	448		D4	G			9DNOTE 11 4A
TF	04-142	448						
2DIL3			(SIGNAL)					
TF	04-152	446		D4	G			9DNOTE 11 4A
TF	04-142	446						
2DIL4			(SIGNAL)					
TF	04-152	445		D4	G			9DNOTE 11 4A
TF	04-142	445						
2DIL5			(SIGNAL)					
TF	04-152	549		D4	G			9DNOTE 11 4A
TF	04-142	549						
2DIL6			(SIGNAL)					
TF	04-152	548		D4	G			9DNOTE 11 4A
TF	04-142	548						
2DIL7			(SIGNAL)					
TF	04-152	547		D4	G			9DNOTE 11 4A
TF	04-142	547						
2DMARDTQ			(SIGNAL)					
TF	04-152	517		D4	G			9DNOTE 11 4A
TF	04-142	517						
2DOC1			(SIGNAL)					
TF	04-152	451		D4	G			9DNOTE 11 4A
TF	04-142	451						
2DOP1			(SIGNAL)					
TF	04-152	452		D4	G			9DNOTE 11 4A
TF	04-142	452						
2DOQ1			(SIGNAL)					
TF	04-152	555		D4	G			9DNOTE 11 4A
TF	04-142	555						
2DQ11			(SIGNAL)					
TF	04-152	554		D4	G			9DNOTE 11 4A
TF	04-142	554						
2DQ21			(SIGNAL)					
TF	04-152	553		D4	G			9DNOTE 11 4A
TF	04-142	553						
2DQ31			(SIGNAL)					
TF	04-152	552		D4	G			9DNOTE 11 4A
TF	04-142	552						
2DQ41			(SIGNAL)					
TF	04-152	551		D4	G			9DNOTE 11 4A
TF	04-142	551						
2DQ51			(SIGNAL)					
TF	04-152	455		D4	G			9DNOTE 11 4A
TF	04-142	455						
2DQ61			(SIGNAL)					
TF	04-152	454		D4	G			9DNOTE 11 4A
TF	04-142	454						

NET ID TYPE	NET OPT FUNCT	DESIG	COMMON NET TERMINAL PAIR	METH PATH	COLOR	GA INSUL	AP OPTION	PT FN TN CONNECTING DRAWING AND NET
2D07			(SIGNAL)					
TF	04-152	459		D4	G			9DNOTE 11 4A
TF	04-142	459						
2DPH			(SIGNAL)					
TF	04-152	207		PW				NOTE 49 4A
TF	04-142	207		PW				NOTE 49 4A
TF	04-134	207		PW				NOTE 49 4A
TF	04-126	207		PW				NOTE 49 4A
TF	04-118	207						
2DPL			(SIGNAL)					
TF	04-152	107		PW				NOTE 49 4A
TF	04-142	107		PW				NOTE 49 4A
TF	04-134	107		PW				NOTE 49 4A
TF	04-126	107		PW				NOTE 49 4A
TF	04-118	107						
2DPR0			(SIGNAL)					
TF	04-162	352		D4	G			9DNOTE 11 4B
TF	04-162	339		PW				NOTE 49 4A
TF	04-142	139						
2DPR1			(SIGNAL)					
TF	04-162	#152		PW				NOTE 49
TF	04-142	352		D4	G			9DNOTE 11 4A
TF	04-152	352						
TF	04-162	152		D4	G			9DNOTE 11 4B
TF	04-162	139						
2DREQWR1			(SIGNAL)					
TF	04-152	518		D4	G			9DNOTE 11 4A
TF	04-142	518						
2DRQ0			(SIGNAL)					
TF	04-152	218		PW				NOTE 49 4A
TF	04-142	218		PW				NOTE 49 4A
TF	04-134	218		PW				NOTE 49 4A
TF	04-126	218		PW				NOTE 49 4A
TF	04-118	218						
2DRQ1			(SIGNAL)					
TF	04-152	219		PW				NOTE 49 4A
TF	04-142	219		PW				NOTE 49 4A
TF	04-134	219		PW				NOTE 49 4A
TF	04-126	219		PW				NOTE 49 4A
TF	04-118	219						
2DRQ2			(SIGNAL)					
TF	04-152	220		PW				NOTE 49 4A
TF	04-142	220		PW				NOTE 49 4A
TF	04-134	220		PW				NOTE 49 4A
TF	04-126	220		PW				NOTE 49 4A
TF	04-118	220						
2DRQ3			(SIGNAL)					
TF	04-152	221		PW				NOTE 49 4A
TF	04-142	221		PW				NOTE 49 4A
TF	04-134	221		PW				NOTE 49 4A
TF	04-126	221		PW				NOTE 49 4A
TF	04-118	221						
2DTID1			(SIGNAL)					
TF	04-152	539		D4	G			9DNOTE 11 4A
TF	04-142	539						
2DTIR0			(SIGNAL)					
TF	04-152	434		D4	G			9DNOTE 11 4A
TF	04-142	434						
2DTIR1			(SIGNAL)					
TF	04-152	440		D4	G			9DNOTE 11 4A
TF	04-142	440						
2DTQD1			(SIGNAL)					
TF	04-152	412		D4	G			9DNOTE 11 4A
TF	04-142	412						
2DTR0			(SIGNAL)					
TF	04-162	254		D4	G			9DNOTE 11 4B
TF	04-162	241		PW				NOTE 49 4A
TF	04-142	041						
2DTR1			(SIGNAL)					
TF	04-162	#054		PW				NOTE 49
TF	04-142	254		D4	G			9DNOTE 11 4A
TF	04-152	254						
TF	04-162	054		D4	G			9DNOTE 11 4B
TF	04-162	041						
2DO			(SIGNAL)					
TF	04-152	008		PW				NOTE 49 4A
TF	04-142	008		PW				NOTE 49 4A
TF	04-134	008		PW				NOTE 49 4A
TF	04-126	008		PW				NOTE 49 4A
TF	04-118	008						
2DOR0			(SIGNAL)					
TF	04-162	353		D4	G			9DNOTE 11 4B
TF	04-162	340		PW				NOTE 49 4A
TF	04-142	140						
2DOR1			(SIGNAL)					
TF	04-162	#153		PW				NOTE 49 4A
TF	04-142	353		D4	G			9DNOTE 11 4A
TF	04-152	353						
TF	04-162	153		D4	G			9DNOTE 11 4B
TF	04-162	140						
2D1			(SIGNAL)					
TF	04-152	108		PW				NOTE 49 4A
TF	04-142	108		PW				NOTE 49 4A
TF	04-134	108		PW				NOTE 49 4A
TF	04-126	108		PW				NOTE 49 4A
TF	04-118	108						

NET ID TYPE	NET OPT FUNCT	DESIG	COMMON NET TERMINAL PAIR	METH PATH	COLOR	GA INSUL	AP OPTION	PT FN TN CONNECTING DRAWING AND NET
2D1R0			(SIGNAL)					
TF	04-162	252		D4	G			9DNOTE 11 4B
TF	04-162	239		PW				NOTE 49 4A
TF	04-142	039						
2D1R1			(SIGNAL)					
TF	04-162	039		D4	G			9DNOTE 11 4B
TF	04-162	052		PW				NOTE 49 4A
TF	04-142	252		D4	G			9DNOTE 11 4A
TF	04-152	252						
2D10			(SIGNAL)					
TF	04-152	210		PW				NOTE 49 4A
TF	04-142	210		PW				NOTE 49 4A
TF	04-134	210		PW				NOTE 49 4A
TF	04-126	210		PW				NOTE 49 4A
TF	04-118	210						
2D11			(SIGNAL)					
TF	04-152	310		PW				NOTE 49 4A
TF	04-142	310		PW				NOTE 49 4A
TF	04-134	310		PW				NOTE 49 4A
TF	04-126	310		PW				NOTE 49 4A
TF	04-118	310						
2D12			(SIGNAL)					
TF	04-152	011		PW				NOTE 49 4A
TF	04-142	011		PW				NOTE 49 4A
TF	04-134	011		PW				NOTE 49 4A
TF	04-126	011		PW				NOTE 49 4A
TF	04-118	011						
2D13			(SIGNAL)					
TF	04-152	111		PW				NOTE 49 4A
TF	04-142	111		PW				NOTE 49 4A
TF	04-134	111		PW				NOTE 49 4A
TF	04-126	111		PW				NOTE 49 4A
TF	04-118	111						
2D14			(SIGNAL)					
TF	04-152	211		PW				NOTE 49 4A
TF	04-142	211		PW				NOTE 49 4A
TF	04-134	211		PW				NOTE 49 4A
TF	04-126	211		PW				NOTE 49 4A
TF	04-118	211						
2D15			(SIGNAL)					
TF	04-152	311		PW				NOTE 49 4A
TF	04-142	311		PW				NOTE 49 4A
TF	04-134	311		PW				NOTE 49 4A
TF	04-126	311		PW				NOTE 49 4A
TF	04-118	311						
2D2			(SIGNAL)					
TF	04-152	208		PW				NOTE 49 4A
TF	04-142	208		PW				NOTE 49 4A
TF	04-134	208		PW				NOTE 49 4A
TF	04-126	208		PW				NOTE 49 4A
TF	04-118	208						
2D2R0			(SIGNAL)					
TF	04-162	351		D4	G			9DNOTE 11 4B
TF	04-162	338		PW				NOTE 49 4A
TF	04-142	138						
2D2R1			(SIGNAL)					
TF	04-162	#151		PW				NOTE 49 4A
TF	04-142	351		D4	G			9DNOTE 11 4A
TF	04-152	351						
TF	04-162	151		D4	G			9DNOTE 11 4B
TF	04-162	138						
2D3			(SIGNAL)					
TF	04-152	308		PW				NOTE 49 4A
TF	04-142	308		PW				NOTE 49 4A
TF	04-134	308		PW				NOTE 49 4A
TF	04-126	308		PW				NOTE 49 4A
TF	04-118	308						
2D3R0			(SIGNAL)					
TF	04-162	250		D4	G			9DNOTE 11 4B
TF	04-162	237		PW				NOTE 49 4A
TF	04-142	037						
2D3R1			(SIGNAL)					
TF	04-162	#050		PW				NOTE 49 4A
TF	04-142	250		D4	G			9DNOTE 11 4A
TF	04-152	250						
TF	04-162	050		D4	G			9DNOTE 11 4B
TF	04-162	037						
2D4			(SIGNAL)					
TF	04-152	009		PW				NOTE 49 4A
TF	04-142	009		PW				NOTE 49 4A
TF	04-134	009		PW				NOTE 49 4A
TF	04-126	009		PW				NOTE 49 4A
TF	04-118	009						
2D4R0			(SIGNAL)					
TF	04-162	349		D4	G			9DNOTE 11 4B
TF	04-162	336		PW				NOTE 49 4A
TF	04-142	136						
2D4R1			(SIGNAL)					
TF	04-162	#149		PW				NOTE 49 4A
TF	04-142	349		D4	G			9DNOTE 11 4A
TF	04-152	349						
TF	04-162	149		D4	G			9DNOTE 11 4B
TF	04-162	136						
2D5			(SIGNAL)					
TF	04-152	109		PW				NOTE 49 4A
TF	04-142	109		PW				NOTE 49 4A
TF	04-134	109		PW				NOTE 49 4A
TF	04-126	109		PW				NOTE 49 4A
TF	04-118	109						

NET ID TYPE	NET OPT FUNCT	DESIG	COMMON NET TERMINAL PAIR	METH PATH	COLOR	GA INSUL	AP OPTION	PT FN TN CONNECTING DRAWING AND NET
2D5R0			(SIGNAL)					
TF	04-162	249		D4	G			9DNOTE 11 4B
TF	04-162	236		PW				NOTE 49 4A
TF	04-142	036						
2D5R1			(SIGNAL)					
TF	04-162	#049		PW				NOTE 49 4A
TF	04-142	249		D4	G			9DNOTE 11 4A
TF	04-152	249						
TF	04-162	049		D4	G			9DNOTE 11 4B
TF	04-162	036						
2D6			(SIGNAL)					
TF	04-152	209		PW				NOTE 49 4A
TF	04-142	209		PW				NOTE 49 4A
TF	04-134	209		PW				NOTE 49 4A
TF	04-126	209		PW				NOTE 49 4A
TF	04-118	209						
2D6R0			(SIGNAL)					
TF	04-162	348		D4	G			9DNOTE 11 4B
TF	04-162	335		PW				NOTE 49 4A
TF	04-142	135						
2D6R1			(SIGNAL)					
TF	04-162	#148		PW				NOTE 49 4A
TF	04-142	348		D4	G			9DNOTE 11 4A
TF	04-152	348						
TF	04-162	148		D4	G			9DNOTE 11 4B
TF	04-162	135						
2D7			(SIGNAL)					
TF	04-152	309		PW				NOTE 49 4A
TF	04-142	309		PW				NOTE 49 4A
TF	04-134	309		PW				NOTE 49 4A
TF	04-126	309		PW				NOTE 49 4A
TF	04-118	309						
2D7R0			(SIGNAL)					
TF	04-162	247		D4	G			9DNOTE 11 4B
TF	04-162	234		PW				NOTE 49 4A
TF	04-142	034						
2D7R1			(SIGNAL)					
TF	04-162	#047		PW				NOTE 49 4A
TF	04-142	247		D4	G			9DNOTE 11 4A
TF	04-152	247						
TF	04-162	047		D4	G			9DNOTE 11 4B
TF	04-162	034						
2D8			(SIGNAL)					
TF	04-152	010		PW				NOTE 49 4A
TF	04-142	010		PW				NOTE 49 4A
TF	04-134	010		PW				NOTE 49 4A
TF	04-126	010		PW				NOTE 49 4A
TF	04-118	010						
2D9			(SIGNAL)					
TF	04-152	110		PW				NOTE 49 4A
TF	04-142	110		PW				NOTE 49 4A
TF	04-134	110		PW				NOTE 49 4A
TF	04-126	110		PW				NOTE 49 4A
TF	04-118	110						
2E0P			(SIGNAL)					
TF	04-152	217		PW				NOTE 49 4A
TF	04-142	217		PW				NOTE 49 4A
TF	04-134	217		PW				NOTE 49 4A
TF	04-126	217		PW				NOTE 49 4A
TF	04-118	217						
2FPROPB0			(SIGNAL)					
TF	04-152	417		D4	G			9DNOTE 11 4A
TF	04-142	417						
2FREADB0			(SIGNAL)					
TF	04-152	410		D4	G			9DNOTE 11 4A
TF	04-142	410						
2ID0			(SIGNAL)					
TF	04-118	334		PW				NOTE 49
TF	04-142	019		D4	G			9DNOTE 11 4A
TF	04-162	019						
2ID1			(SIGNAL)					
TF	04-118	335		PW				NOTE 49
TF	04-142	119		D4	G			9DNOTE 11 4A
TF	04-152	119						
2ID2			(SIGNAL)					
TF	04-118	336		PW				NOTE 49
TF	04-142	020		D4	G			9DNOTE 11 4A
TF	04-152	020						
2ID3			(SIGNAL)					
TF	04-118	337		PW				NOTE 49
TF	04-142	120		D4	G			9DNOTE 11 4A
TF	04-152	120						
2ID4			(SIGNAL)					
TF	04-118	338		PW				NOTE 49
TF	04-142	021		D4	G			9DNOTE 11 4A
TF	04-152	021						
2ID5			(SIGNAL)					
TF	04-118	339		PW				NOTE 49
TF	04-142	121		D4	G			9DNOTE 11 4A
TF	04-152	121						

WESTERN ELECTRIC CO., INC. PRINTED IN USA		DWG SIZE C2
T*3F008-11	SHEET C6	ISSUE 3

NET ID TYPE	FUNCT	NET OPT DESIG	TERMINAL PAIR	METH PATH	COLOR	GA	INSUL	AP OPTION	PT	FN	TN	COMMON NET CONNECTING DRAWING AND NET
2ID6				(SIGNAL)								
TF	04-118	340		PW				NOTE 49				
TF	04-142	022		D4	G			3ONOTE 11 4A				
TF	04-152	022										
2ID7				(SIGNAL)								
TF	04-118	341		PW				NOTE 49				
TF	04-142	122		D4	G			3ONOTE 11 4A				
TF	04-152	122										
2ID8				(SIGNAL)								
TF	04-118	342		PW				NOTE 49				
TF	04-142	023		D4	G			3ONOTE 11 4A				
TF	04-152	023										
2ID9				(SIGNAL)								
TF	04-118	343		PW				NOTE 49				
TF	04-142	123		D4	G			3ONOTE 11 4A				
TF	04-152	123										
2IMBTIBO				(SIGNAL)								
TF	04-152	510		D4	G			3ONOTE 11 4A				
TF	04-142	510										
2INACTP				(SIGNAL)								
TF	04-142	405		D4	G			3ONOTE 11 4A				
TF	04-152	406										
2INACT1				(SIGNAL)								
TF	04-142	505		D4	G			3ONOTE 11 4A				
TF	04-152	505										
2IRQ0				(SIGNAL)								
TF	04-118	116		PW				NOTE 49				
TF	04-142	116		D4	G			3ONOTE 11 4A				
TF	04-152	116										
2IRQ1				(SIGNAL)								
TF	04-118	016		PW				NOTE 49				
TF	04-142	016		D4	G			3ONOTE 11 4A				
TF	04-152	016										
2IRQ2				(SIGNAL)								
TF	04-118	117		PW				NOTE 49				
TF	04-134	117										
2IRQ3				(SIGNAL)								
TF	04-118	017		PW				NOTE 49				
TF	04-134	017										
2IRQ4				(SIGNAL)								
TF	04-118	118		PW				NOTE 49				
TF	04-126	117										
2IRQ5				(SIGNAL)								
TF	04-118	018		PW				NOTE 49				
TF	04-126	017										
2ISOLB				(SIGNAL)								
TF	04-152	519		D4	G			3ONOTE 11 4A				
TF	04-142	519										
2MIO				(SIGNAL)								
TF	04-152	216		PW				NOTE 49 4A				
TF	04-142	216		PW				NOTE 49 4A				
TF	04-134	216		PW				NOTE 49 4A				
TF	04-126	216		PW				NOTE 49 4A				
TF	04-118	216										
2MPN				(SIGNAL)								
TF	04-118	333		PW				NOTE 49				
TF	04-142	222		D4	G			3ONOTE 11 4A				
TF	04-152	222										
2NCROYO				(SIGNAL)								
TF	04-152	423		D4	G			3ONOTE 11 4A				
TF	04-142	423										
2NCROY1				(SIGNAL)								
TF	04-152	420		D4	G			3ONOTE 11 4A				
TF	04-142	420										
2NG0				(GROUND)								
TF	04-152	215		PW				NOTE 49 4A				
TF	04-142	215		PW				NOTE 49 4A				
TF	04-134	215		PW				NOTE 49 4A				
TF	04-126	215		PW				NOTE 49 4A				
TF	04-118	215										
2NG1				(GROUND)								
TF	04-152	214		PW				NOTE 49 4A				
TF	04-142	214		PW				NOTE 49 4A				
TF	04-134	214		PW				NOTE 49 4A				
TF	04-126	214		PW				NOTE 49 4A				
TF	04-118	214										
2NG2				(GROUND)								
TF	04-152	213		PW				NOTE 49 4A				
TF	04-142	213		PW				NOTE 49 4A				
TF	04-134	213		PW				NOTE 49 4A				
TF	04-126	213		PW				NOTE 49 4A				
TF	04-118	213										
2NG3				(GROUND)								
TF	04-152	212		PW				NOTE 49 4A				
TF	04-142	212		PW				NOTE 49 4A				
TF	04-134	212		PW				NOTE 49 4A				
TF	04-126	212		PW				NOTE 49 4A				
TF	04-118	212										
2NG4				(GROUND)								
TF	04-152	015		PW				NOTE 49 4A				
TF	04-142	015		PW				NOTE 49 4A				
TF	04-134	015		PW				NOTE 49 4A				
TF	04-126	015		PW				NOTE 49 4A				
TF	04-118	015										

NET ID TYPE	FUNCT	NET OPT DESIG	TERMINAL PAIR	METH PATH	COLOR	GA	INSUL	AP OPTION	PT	FN	TN	COMMON NET CONNECTING DRAWING AND NET
2NG5				(GROUND)								
TF	04-152	014		PW				NOTE 49 4A				
TF	04-142	014		PW				NOTE 49 4A				
TF	04-134	014		PW				NOTE 49 4A				
TF	04-126	014		PW				NOTE 49 4A				
TF	04-118	014										
2NG6				(GROUND)								
TF	04-152	013		PW				NOTE 49 4A				
TF	04-142	013		PW				NOTE 49 4A				
TF	04-134	013		PW				NOTE 49 4A				
TF	04-126	013		PW				NOTE 49 4A				
TF	04-118	013										
2NG7				(GROUND)								
TF	04-152	307		PW				NOTE 49 4A				
TF	04-142	307		PW				NOTE 49 4A				
TF	04-134	307		PW				NOTE 49 4A				
TF	04-126	307		PW				NOTE 49 4A				
TF	04-118	307										
2NG8				(GROUND)								
TF	04-152	012		PW				NOTE 49 4A				
TF	04-142	012		PW				NOTE 49 4A				
TF	04-134	012		PW				NOTE 49 4A				
TF	04-126	012		PW				NOTE 49 4A				
TF	04-118	012										
2NPPF				(SIGNAL)								
TF	04-152	317		PW				NOTE 49 4A				
TF	04-142	317		PW				NOTE 49 4A				
TF	04-134	317		PW				NOTE 49 4A				
TF	04-126	317		PW				NOTE 49 4A				
TF	04-118	317										
2NPRESETO				(SIGNAL)								
TF	04-152	411		D4	G			3ONOTE 11 4A				
TF	04-142	411										
20RPHBYT				(SIGNAL)								
TF	04-152	541		D4	G			3ONOTE 11 4A				
TF	04-142	541										
2PEN				(SIGNAL)								
TF	04-152	113		PW				NOTE 49 4A				
TF	04-142	113		PW				NOTE 49 4A				
TF	04-134	113		PW				NOTE 49 4A				
TF	04-126	113		PW				NOTE 49 4A				
TF	04-118	113										
2PRACRST				(SIGNAL)								
TF	04-152	514		D4	G			3ONOTE 11 4A				
TF	04-142	514										
2PTYERRO				(SIGNAL)								
TF	04-152	544		D4	G			3ONOTE 11 4A				
TF	04-142	544										
2PWRESET				(SIGNAL)								
TF	04-152	441		D4	G			3ONOTE 11 4A				
TF	04-142	441										
2PWRQO				(SIGNAL)								
TF	04-152	538		D4	G			3ONOTE 11 4A				
TF	04-142	538										
2PWRTO				(SIGNAL)								
TF	04-142	404		D4	G			3ONOTE 11 4A				
TF	04-152	404										
2QUAR				(SIGNAL)								
TF	04-142	408		D4	G			3ONOTE 11 4A				
TF	04-152	408										
2QUARA				(SIGNAL)								
TF	04-118	020		D4	G			3ONOTE 11 4A				
TF	04-134	020		D4	G			3ONOTE 11 2B				
TF	04-142	018		D4	G			3ONOTE 11 4A				
TF	04-152	018										
2RACRSTO				(SIGNAL)								
TF	04-152	409		D4	G			3ONOTE 11 4A				
TF	04-142	409										
2RACRST1				(SIGNAL)								
TF	04-152	516		D4	G			3ONOTE 11 4A				
TF	04-142	516										
2RD				(SIGNAL)								
TF	04-152	314		PW				NOTE 49 4A				
TF	04-142	314		PW				NOTE 49 4A				
TF	04-134	314		PW				NOTE 49 4A				
TF	04-126	314		PW				NOTE 49 4A				
TF	04-118	314										
2RDFULL				(SIGNAL)								
TF	04-152	422		D4	G			3ONOTE 11 4A				
TF	04-142	422										
2RDIMBTO				(SIGNAL)								
TF	04-152	436		D4	G			3ONOTE 11 4A				
TF	04-142	436										
2RDIPO				(SIGNAL)								
TF	04-142	407		D4	G			3ONOTE 11 4A				
TF	04-152	407										
2RDIP1				(SIGNAL)								
TF	04-142	507		D4	G			3ONOTE 11 4A				
TF	04-152	507										
2RDIS				(SIGNAL)								
TF	04-152	312		PW				NOTE 49 4A				
TF	04-142	312		PW				NOTE 49 4A				
TF	04-134	312		PW				NOTE 49 4A				
TF	04-126	312		PW				NOTE 49 4A				
TF	04-118	312										

NET ID TYPE	FUNCT	NET OPT DESIG	TERMINAL PAIR	METH PATH	COLOR	GA	INSUL	AP OPTION	PT	FN	TN	COMMON NET CONNECTING DRAWING AND NET
2RDTC				(SIGNAL)								
TF	04-152	513		D4	G			3ONOTE 11 4A				
TF	04-142	513										
2RDTOO				(SIGNAL)								
TF	04-152	439		D4	G			3ONOTE 11 4A				
TF	04-142	439										
2RESET				(SIGNAL)								
TF	04-152	322		PW				NOTE 49 4A				
TF	04-142	322		PW				NOTE 49 4A				
TF	04-134	322		PW				NOTE 49 4A				
TF	04-126	322		PW				NOTE 49 4A				
TF	04-118	322										
2RGOO				(GROUND)								
TF	04-162	#055		PW				NOTE 49 4A				
TF	04-142	255		D4	G			3ONOTE 11 4A				
TF	04-152	255										
TF	04-162	055		D4	G			3ONOTE 11 4B				
TF	04-162	042										
2RGOOA				(GROUND)								
TF	04-142	055		D4	G			3ONOTE 11 4A				
TF	04-152	055										
2RGO1				(GROUND)								
TF	04-162	#154		PW				NOTE 49 4A				
TF	04-142	354		D4	G			3ONOTE 11 4A				
TF	04-152	354										
TF	04-162	154		D4	G			3ONOTE 11 4B				
TF	04-162	141										
2RGOIA				(GROUND)								
TF	04-142	154		D4	G			3ONOTE 11 4A				
TF	04-152	154										
2RGO2				(GROUND)								
TF	04-162	#059		PW				NOTE 49 4A				
TF	04-142	259		D4	G			3ONOTE 11 4A				
TF	04-152	259										
TF	04-162	059		D4	G			3ONOTE 11 4B				
TF	04-162	040										
2RGO3				(GROUND)								
TF	04-162	#051		PW				NOTE 49 4A				
TF	04-142	251		D4	G			3ONOTE 11 4A				
TF	04-152	251										
TF	04-162	051		D4	G			3ONOTE 11 4B				
TF	04-162	038										
2RGO4				(GROUND)								
TF	04-162	#150		PW				NOTE 49 4A				
TF	04-142	350		D4	G			3ONOTE 11 4A				
TF	04-152	350										
TF	04-162	150		D4	G			3ONOTE 11 4B				
TF	04-162	137										
2RGO5				(GROUND)								
TF	04-162	#048		PW				NOTE 49 4A				
TF	04-142	248		D4	G			3ONOTE 11 4A				
TF	04-152	248										
TF	04-162	048		D4	G			3ONOTE 11 4B				
TF	04-162	035										
2RGO6				(GROUND)								
TF	04-162	#046		PW				NOTE 49 4A				
TF	04-142	246		D4	G			3ONOTE 11 4A				
TF	04-152	246										
TF	04-162	046		D4	G			3ONOTE 11 4B				
TF	04-162	033										
2RGO7				(GROUND)								
TF	04-162	255		D4	G			3ONOTE 11 4B				
TF	04-162	242		PW				NOTE 49 4A				
TF	04-142	042										
2RGO8				(GROUND)								
TF	04-162	354		D4	G			3ONOTE 11 4B				
TF	04-162	341		PW				NOTE 49 4A				
TF	04-142	141										
2RGO9				(GROUND)								
TF	04-162	253		D4	G			3ONOTE 11 4B				
TF	04-162	240		PW				NOTE 49 4A				
TF	04-142	040										
2RG10				(GROUND)								
TF	04-162	251		D4	G			3ONOTE 11 4B				
TF	04-162	238		PW				NOTE 49 4A				
TF	04-142	038										
2RG11				(GROUND)								
TF	04-162	350		D4	G			3ONOTE 11 4B				
TF	04-162	337		PW				NOTE 49 4A				
TF	04-142	137										
2RG12				(GROUND)								
TF	04-162	248		D4	G			3ONOTE 11 4B				
TF	04-162	235		PW				NOTE 49 4A				
TF	04-142	035										
2RG13				(GROUND)								
TF	04-162	246		D4	G			3ONOTE 11 4B				
TF	04-162	233		PW				NOTE 49 4A				
TF	04-142	033										
2RINGSMO				(GROUND)								
TF	04-152	537		D4	G			3ONOTE 11 4A				
TF	04-142	537										
2RNGEMNO				(GROUND)								
TF	04-152	536		D4	G			3ONOTE 11 4A				
TF	04-142	536										

NET ID TYPE	FUNCT	NET OPT DESIG	TERMINAL PAIR	METH PATH	COLOR	GA	INSUL	AP OPTION	PT	FN	TN	COMMON NET CONNECTING DRAWING AND NET
2RRSTS1				(SIGNAL)								
TF	04-152	515		D4	G			3ONOTE 11 4A				
TF	04-142	515										
2RW				(SIGNAL)								
TF	04-152	316		PW				NOTE 49 4A				
TF	04-142	316		PW				NOTE 49 4A				
TF	04-134	316		PW				NOTE 49 4A				
TF	04-126	316		PW				NOTE 49 4A				
TF	04-118	316										
2SANE				(SIGNAL)								
TF	04-152	323		PW				NOTE 49 4A				
TF	04-142	323		PW				NOTE 49 4A				
TF	04-134	323		PW				NOTE 49 4A				
TF	04-126	323		PW				NOTE 49 4A				
TF	04-118	323										
2SBCASTB				(SIGNAL)								
TF	04-152	521		D4	G			3ONOTE 11 4A				
TF	04-142	521										
2SISOLO				(SIGNAL)								
TF	04-152	442		D4	G			3ONOTE 11 4A				
TF	04-142	442										
2SMIB				(SIGNAL)								
TF	04-152	421		D4	G			3ONOTE 11 4A				
TF	04-142	421										
2SP1				(SIGNAL)								
TF	04-142	401		D4	G			3ONOTE 11 4A				
TF	04-152	401										
2SP2				(SIGNAL)								
TF	04-152	406		D4	G			3ONOTE 11 4A				
TF	04-142	406										
2SP3				(SIGNAL)								
TF	04-152	435		D4	G			3ONOTE 11 4A				
TF	04-142	435										
2SP4				(SIGNAL)								
TF	04-152	413		D4	G			3ONOTE 11 4A				
TF	04-142	413										
2SQUARB				(SIGNAL)								
TF	04-152	444		D4	G			3ONOTE 11 4A				
TF	04-142	444										
2STW				(SIGNAL)								
TF	04-152	223		PW				NOTE 49 4A				
TF	04-142	223		PW				NOTE 49 4A				
TF	04-134	223		PW				NOTE 49 4A				
TF	04-126	223		PW				NOTE 49 4A				
TF	04-118	223										
2TOKDAB				(SIGNAL)								
TF	04-142	506		D4	G			3ONOTE 11 4A				
TF	04-152	506										
2TOOSHRT				(SIGNAL)								
TF	04-152	542		D4	G			3ONOTE 11 4A				
TF	04-142	542										
2TP1				(SIGNAL)								
TF	04-142	509		D4	G			3ONOTE 11 4A				
TF	04-152	509										
2TWRQO				(SIGNAL)								
TF	04-152	438		D4	G			3ONOTE 11 4A				
TF	04-142	438										
2TWRTO				(SIGNAL)								
TF	04-142	504		D4	G			3ONOTE 11 4A				
TF	04-152	504										
2TO1				(SIGNAL)								
TF	04-118	346		D4	G			3ONOTE 11 1B				
TF	04-118	347										
2UNCKO				(SIGNAL)								
TF	04-152	437		D4	G			3ONOTE 11 4A				
TF	04-142	437										
2WAIT				(SIGNAL)								
TF	04-152	313		PW				NOTE 49 4A				
TF	04-142	313		PW				NOTE 49 4A				
TF	04-134	313		PW				NOTE 49 4A				
TF	04-126	313		PW				NOTE 49 4A				
TF	04-118	313										
2WR				(SIGNAL)								
TF	04-152	114		PW				NOTE 49 4A				
TF	04-142	114		PW				NOTE 49 4A				
TF	04-134	114		PW				NOTE 49 4A				
TF	04-126	114		PW				NOTE 49 4A				
TF	04-118	114										
2WRABEND				(SIGNAL)								
TF	04-152	535		D4	G			3ONOTE 11 4A				
TF	04-142	535										
2WREMPTY				(SIGNAL)								
TF	04-152	439		D4	G			3ONOTE 11 4A				
TF	04-142	439										

NET ID TYPE	NET FUNCT	NET OPT DESIG	TERMINAL PAIR	METH PATH	COMMON NET COLOR	GA	INSUL	AP OPTION CONNECTING DRAWING AND NET	PT	FN	TN
2WRSMEAR			(SIGNAL)								
TF	04-152	539		D4	G			90NOTE 11 4A			
TF	04-142	539									
2XRSTD			(SIGNAL)								
TF	04-118	021		PW				NOTE 49			
TF	04-194	021									
2XRST1			(SIGNAL)								
TF	04-118	022		PW				NOTE 49			
TF	04-126	021									
9DTR1			(SIGNAL)								
TF	04-142	054		D4	G			90NOTE 11 4A			
TF	04-152	054									
4BRTNA			(SIGNAL)								
TF	04-018	003		PW				NOTE 49			
TF	04-018	004		PW				NOTE 49			
TF	04-018	005		PW				NOTE 49			
TF	04-018	102		PW				NOTE 49			
TF	04-018	103		PW				NOTE 49			
TF	04-018	#104		PW				NOTE 49			
TF	04-018	203		PW				NOTE 49			
TF	04-018	204		PW				NOTE 49			
TF	04-018	205		PW				NOTE 49			
TF	04-018	902		PW				NOTE 49			
TF	04-018	903		PW				NOTE 49			
TF	04-018	904		PW				NOTE 49			
TF	04-018	113		D4	G			90NOTE 11 4B			
TF	04-018	104									
4BRTNB			(SIGNAL)								
TF	04-178	003		PW				NOTE 49			
TF	04-178	004		PW				NOTE 49			
TF	04-178	005		PW				NOTE 49			
TF	04-178	102		PW				NOTE 49			
TF	04-178	103		PW				NOTE 49			
TF	04-178	104		PW				NOTE 49			
TF	04-178	113		PW				NOTE 49			
TF	04-178	203		PW				NOTE 49			
TF	04-178	204		PW				NOTE 49			
TF	04-178	205		PW				NOTE 49			
TF	04-178	902		PW				NOTE 49			
TF	04-178	903		PW				NOTE 49			
TF	04-178	904									
5A			(BATTERY)								
TF	04-018	355		PW				NOTE 49 1B			
TF	04-018	354		PW				NOTE 49 1B			
TF	04-018	353		PW				NOTE 49 1B			
TF	04-018	352		PW				NOTE 49 1B			
TF	04-018	351		PW				NOTE 49 1B			
TF	04-018	350		PW				NOTE 49 1B			
TF	04-018	349		PW				NOTE 49 1B			
TF	04-018	348		PW				NOTE 49 1B			
TF	04-018	347		PW				NOTE 49 1B			
TF	04-018	346		PW				NOTE 49 1B			
TF	04-018	345		PW				NOTE 49 1A			
TF	04-018	245		PW				NOTE 49 1B			
TF	04-018	246		PW				NOTE 49 1B			
TF	04-018	247		PW				NOTE 49 1B			
TF	04-018	248		PW				NOTE 49 1B			
TF	04-018	249		PW				NOTE 49 1B			
TF	04-018	250		PW				NOTE 49 1B			
TF	04-018	251		PW				NOTE 49 1B			
TF	04-018	252		PW				NOTE 49 1B			
TF	04-018	253		PW				NOTE 49 1B			
TF	04-018	254		PW				NOTE 49 1B			
TF	04-018	255		PW				NOTE 49 1A			
TF	04-018	155		PW				NOTE 49 1B			
TF	04-018	154		PW				NOTE 49 1B			
TF	04-018	153		PW				NOTE 49 1B			
TF	04-018	152		PW				NOTE 49 1B			
TF	04-018	151		PW				NOTE 49 1B			
TF	04-018	150		PW				NOTE 49 1B			
TF	04-018	149		PW				NOTE 49 1B			
TF	04-018	148		PW				NOTE 49 1B			
TF	04-018	147		PW				NOTE 49 1B			
TF	04-018	146		PW				NOTE 49 1B			
TF	04-018	145		PW				NOTE 49 1A			
TF	04-018	045		PW				NOTE 49 1B			
TF	04-018	046		PW				NOTE 49 1B			
TF	04-018	047		PW				NOTE 49 1B			
TF	04-018	048		PW				NOTE 49 1B			
TF	04-018	049		PW				NOTE 49 1B			
TF	04-018	050		PW				NOTE 49 1B			
TF	04-018	051		PW				NOTE 49 1B			
TF	04-018	052		PW				NOTE 49 1B			
TF	04-018	053		PW				NOTE 49 1B			
TF	04-018	054		PW				NOTE 49 1B			
TF	04-018	055		PW				NOTE 49 1B			
TF	04-018	056		PW				NOTE 49 1A			
TF	04-018	156		PW				NOTE 49 1A			
TF	04-018	256		PW				NOTE 49 1A			
TF	04-018	356		PW				NOTE 49 4A			
TF	04-026	056		PW				NOTE 49 1A			
TF	04-026	156		PW				NOTE 49 4A			
TF	04-034	056		PW				NOTE 49 1A			
TF	04-034	156		PW				NOTE 49 4A			
TF	04-042	056		PW				NOTE 49 1A			
TF	04-042	156		PW				NOTE 49 4A			
TF	04-050	056		PW				NOTE 49 1A			
TF	04-050	156		PW				NOTE 49 4A			
TF	04-058	056		PW				NOTE 49 1A			
TF	04-058	156		PW				NOTE 49 4A			
TF	04-068	056		PW				NOTE 49 1A			
TF	04-068	156		PW				NOTE 49 4A			
TF	04-078	056		PW				NOTE 49 1A			
TF	04-078	156		PW				NOTE 49 4A			
TF	04-086	156		PW				NOTE 49 2A			
TF	04-058	132		PW				NOTE 49 1A			
TF	04-058	032		PW				NOTE 49 4A			
TF	04-050	132		PW				NOTE 49 1A			
TF	04-050	032		PW				NOTE 49 4A			
TF	04-042	132		PW				NOTE 49 1A			
TF	04-042	032		PW				NOTE 49 4A			

5A CONTINUED

NET ID TYPE	NET FUNCT	NET OPT DESIG	TERMINAL PAIR	METH PATH	COMMON NET COLOR	GA	INSUL	AP OPTION CONNECTING DRAWING AND NET	PT	FN	TN
5A CONTINUED											
TF	04-034		132	PW				NOTE 49 1A			
TF	04-034		032	PW				NOTE 49 4A			
TF	04-026		132	PW				NOTE 49 1A			
TF	04-026		032	PW				NOTE 49 4B			
TF	04-026		024	PW				NOTE 49 1A			
TF	04-026		124	PW				NOTE 49 4A			
TF	04-034		024	PW				NOTE 49 1A			
TF	04-034		124	PW				NOTE 49 4A			
TF	04-042		024	PW				NOTE 49 1A			
TF	04-042		124	PW				NOTE 49 4A			
TF	04-050		024	PW				NOTE 49 1A			
TF	04-050		124	PW				NOTE 49 4A			
TF	04-058		024	PW				NOTE 49 1A			
TF	04-058		124	PW				NOTE 49 4A			
TF	04-068		124	PW				NOTE 49 1A			
TF	04-068		024	PW				NOTE 49 4B			
TF	04-068		032	PW				NOTE 49 1A			
TF	04-068		132	PW				NOTE 49 4A			
TF	04-086		132	PW				NOTE 49 1A			
TF	04-086		032	PW				NOTE 49 4A			
TF	04-078		132	PW				NOTE 49 1A			
TF	04-078		032	PW				NOTE 49 4B			
TF	04-078		024	PW				NOTE 49 1A			
TF	04-078		124	PW				NOTE 49 4A			
TF	04-086		124	PW				NOTE 49 4B			
TF	04-086		115	PW				NOTE 49 4B			
TF	04-086		001	PW				NOTE 49 1B			
TF	04-086		000	PW				NOTE 49 4A			
TF	04-078		000	PW				NOTE 49 1B			
TF	04-078		001	PW				NOTE 49 4A			
TF	04-068		001	PW				NOTE 49 1B			
TF	04-068		000	PW				NOTE 49 4A			
TF	04-058		000	PW				NOTE 49 1B			
TF	04-058		001	PW				NOTE 49 4A			
TF	04-050		001	PW				NOTE 49 1B			
TF	04-050		000	PW				NOTE 49 4A			
TF	04-042		000	PW				NOTE 49 1B			
TF	04-042		001	PW				NOTE 49 4A			
TF	04-034		001	PW				NOTE 49 1B			
TF	04-034		000	PW				NOTE 49 4A			
TF	04-026		000	PW				NOTE 49 1B			
TF	04-026		001	PW				NOTE 49			
TF	04-018		118	PW				NOTE 49			
TF	04-058		224	PW				NOTE 49			
TF	04-058		232	PW				NOTE 49			
TF	04-058		256	PW				NOTE 49			
TF	04-068		224	PW				NOTE 49			
TF	04-068		232	PW				NOTE 49			
TF	04-068		256								
5B			(BATTERY)								
TF	04-178		355	PW				NOTE 49 1B			
TF	04-178		354	PW				NOTE 49 1B			
TF	04-178		353	PW				NOTE 49 1B			
TF	04-178		352	PW				NOTE 49 1B			
TF	04-178		351	PW				NOTE 49 1B			
TF	04-178		350	PW				NOTE 49 1B			
TF	04-178		349	PW				NOTE 49 1B			
TF	04-178		348	PW				NOTE 49 1B			
TF	04-178		347	PW				NOTE 49 1B			
TF	04-178		346	PW				NOTE 49 1B			
TF	04-178		345	PW				NOTE 49 1A			
TF	04-178		245	PW				NOTE 49 1B			
TF	04-178		246	PW				NOTE 49 1B			
TF	04-178		247	PW				NOTE 49 1B			
TF	04-178		248	PW				NOTE 49 1B			
TF	04-178		249	PW				NOTE 49 1B			
TF	04-178		250	PW				NOTE 49 1B			
TF	04-178		251	PW				NOTE 49 1B			
TF	04-178		252	PW				NOTE 49 1B			
TF	04-178		253	PW				NOTE 49 1B			
TF	04-178		254	PW				NOTE 49 1B			
TF	04-178		255	PW				NOTE 49 1A			
TF	04-178		155	PW				NOTE 49 1B			
TF	04-178		154	PW				NOTE 49 1B			
TF	04-178		153	PW				NOTE 49 1B			
TF	04-178		152	PW				NOTE 49 1B			
TF	04-178		151	PW				NOTE 49 1B			
TF	04-178		150	PW				NOTE 49 1B			
TF	04-178		149	PW				NOTE 49 1B			
TF	04-178		148	PW				NOTE 49 1B			
TF	04-178		147	PW				NOTE 49 1B			
TF	04-178		146	PW				NOTE 49 1B			
TF	04-178		145	PW				NOTE 49 1A			
TF	04-178		045	PW				NOTE 49 1B			
TF	04-178		046	PW				NOTE 49 1B			
TF	04-178		047	PW				NOTE 49 1B			
TF	04-178		048	PW				NOTE 49 1B			
TF	04-178		049	PW				NOTE 49 1B			
TF	04-178		050	PW				NOTE 49 1B			
TF	04-178		051	PW				NOTE 49 1B			
TF	04-178		052	PW				NOTE 49 1B			
TF	04-178		053	PW				NOTE 49 1B			
TF	04-178		054	PW				NOTE 49 1B			
TF	04-178		055	PW				NOTE 49 1B			
TF	04-178		056	PW				NOTE 49 1A			
TF	04-178		156	PW				NOTE 49 1A			
TF	04-178		256	PW				NOTE 49 1A			
TF	04-178		356	PW				NOTE 49 4A			
TF	04-162		156	PW				NOTE 49 1A			
TF	04-162		056	PW				NOTE 49 4A			
TF	04-152		156	PW				NOTE 49 1A			
TF	04-152		056	PW				NOTE 49 4A			
TF	04-142		156	PW				NOTE 49 1A			
TF	04-142		056	PW				NOTE 49 4A			
TF	04-134		156	PW				NOTE 49 1A			
TF	04-134		056	PW				NOTE 49 4A			
TF	04-126		156	PW				NOTE 49 1A			
TF	04-126		056	PW				NOTE 49 4A			
TF	04-118		156	PW				NOTE 49 1A			
TF	04-118		056	PW				NOTE 49 2B			
TF	04-142		132	PW				NOTE 49 1A			
TF	04-142		032	PW				NOTE 49 4A			
TF	04-134		132	PW				NOTE 49 1A			
TF	04-134		032	PW				NOTE 49 4A			
TF	04-126		132	PW				NOTE 49 1A			

5B CONTINUED

NET ID TYPE	NET FUNCT	NET OPT DESIG	TERMINAL PAIR	METH PATH	COMMON NET COLOR	GA	INSUL	AP OPTION CONNECTING DRAWING AND NET	PT	FN	TN
5B CONTINUED											
TF	04-126		032	PW				NOTE 49 4A			
TF	04-118		132	PW				NOTE 49 1A			
TF	04-118		032	PW				NOTE 49 4B			
TF	04-118		024	PW				NOTE 49 1A			
TF	04-118		124	PW				NOTE 49 4A			
TF	04-126		024	PW				NOTE 49 1A			
TF	04-126		124	PW				NOTE 49 4A			
TF	04-134		024	PW				NOTE 49 1A			
TF	04-134		124	PW				NOTE 49 4A			
TF	04-142		024	PW				NOTE 49 1A			
TF	04-142		124	PW				NOTE 49 4A			
TF	04-152		124	PW				NOTE 49 1A			
TF	04-152		024	PW				NOTE 49 4B			
TF	04-152		032	PW				NOTE 49 1A			
TF	04-152		132	PW				NOTE 49 4A			
TF	04-162		132	PW				NOTE 49 1A			
TF	04-162		032	PW				NOTE 49 4B			
TF	04-162		024	PW				NOTE 49 1A			
TF	04-162		124	PW				NOTE 49 4B			
TF	04-162		001	PW				NOTE 49 1B			
TF	04-162		000	PW				NOTE 49 4A			
TF	04-152		000	PW				NOTE 49 1B			
TF	04-152		001	PW				NOTE 49 4A			
TF	04-142		001	PW				NOTE 49 1B			
TF	04-142		000	PW				NOTE 49 4A			
TF	04-134		000	PW				NOTE 49 1B			
TF	04-134		001	PW				NOTE 49 4A			
TF	04-126		001	PW				NOTE 49 1B			
TF	04-126		000	PW				NOTE 49 4A			
TF	04-118		000	PW				NOTE 49 1B			
TF	04-118		001	PW				NOTE 49			
TF	04-142		220	PW				NOTE 49			
TF	04-142		232	PW				NOTE 49			
TF	04-142		256	PW				NOTE 49			
TF	04-152		224	PW				NOTE 49			
TF	04-152		232	PW				NOTE 49			
TF	04-152		256	PW				NOTE 49			
TF	04-178		118								

WESTERN ELECTRIC CO., INC. PRINTED IN USA		DWG SIZE C2
T*3F008-11	SHEET C8	ISSUE 3

FIG. H1

BALANCED RING BUS
(FRAME TO FRAME)
OR
(INTRA FR OR CAB)

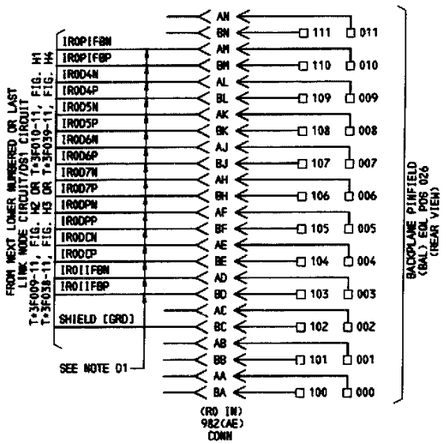

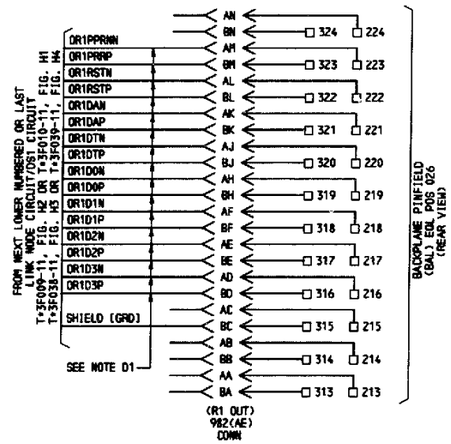

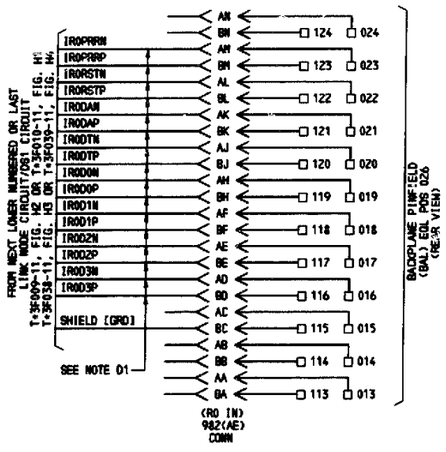

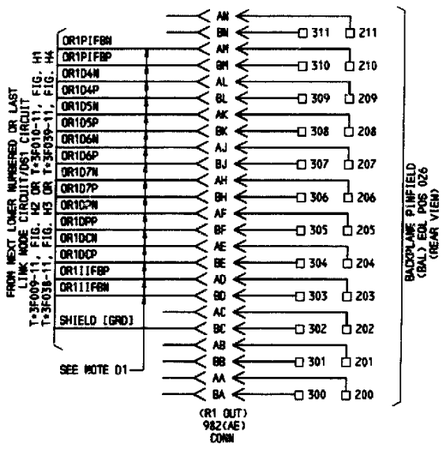

MANUFACTURING NOTES

SHOP INST	
X	X

01. THE FIRST LETTER IN EACH LEAD DESIGNATION IS EITHER A "O" FOR OUTPUT OR "I" FOR INPUT. OUTPUT LEADS FROM THIS CIRCUIT WILL CONNECT AS INPUT LEADS OF CONNECTING CIRCUIT. LIKEWISE, INPUT LEADS FROM THIS CIRCUIT WILL CONNECT AS OUTPUT LEADS OF CONNECTING CIRCUIT.

SHEET	SH NO.	D1	D2	D3	D4	D5	D6	D7	D8	D9
INDEX	ISSUE	13	13	8	10	12	13	12	9	9

SEE PROPRIETARY NOTICE ON SHEET A1
Copyright © 1994 AT&T
Unpublished & Not for Publication
All Rights Reserved

3B INTERFACE CIRCUIT		
	C2	ISSUE 13
AT&T	T*3F008-11	SHEET 01

M2

PRINTED IN U.S.A.

FIG. H4

(CABLING TO 3B PROCESSOR)

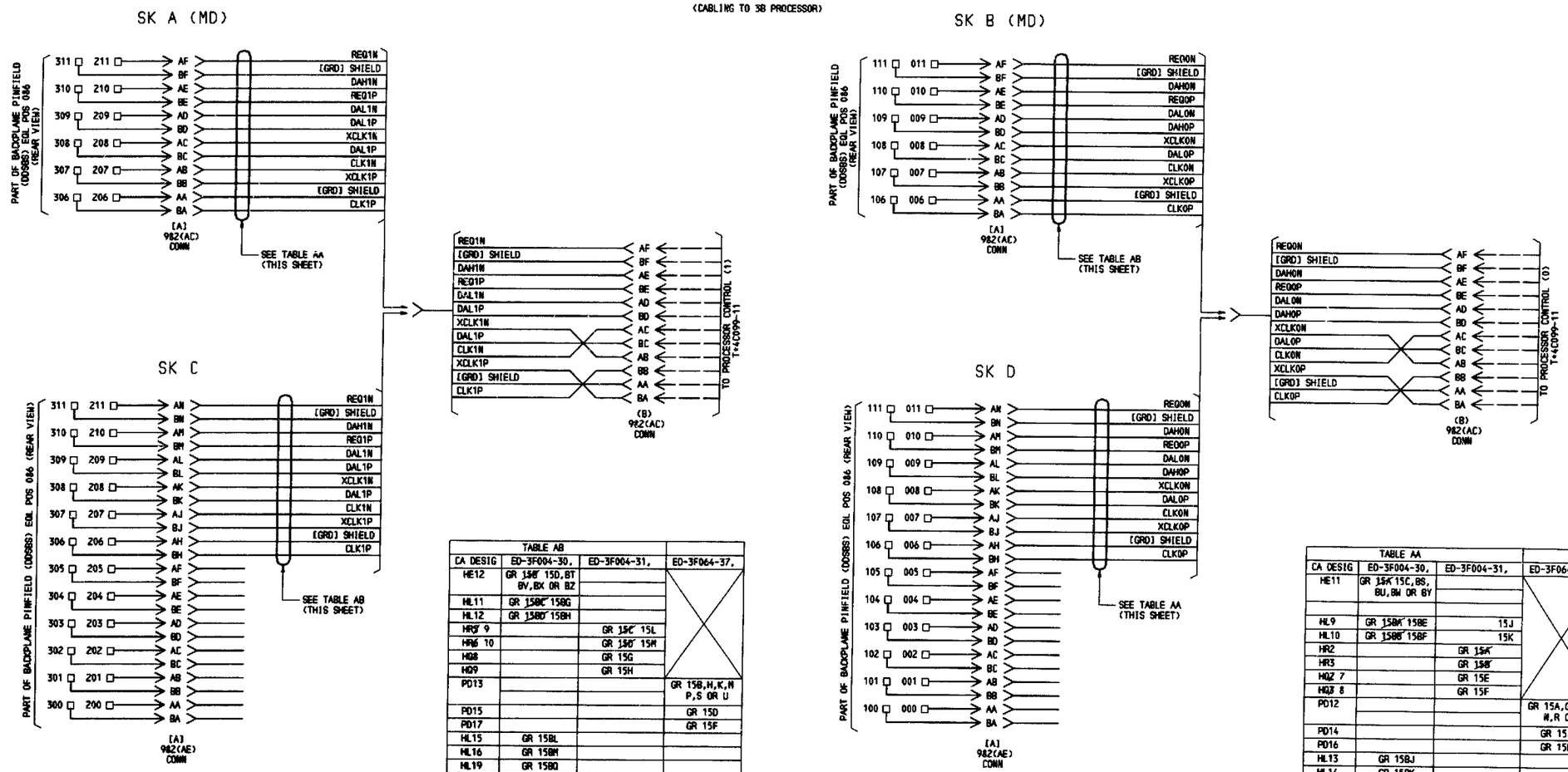

TABLE AB			
CA DESIG	ED-3F004-30,	ED-3F004-31,	ED-3F064-37,
HE12	GR ~~15B~~ 15D,BT BV,BX OR BZ		
HL11	GR ~~15BC~~ 15BG		
HL12	GR ~~15BD~~ 15BH		
HR~~5~~ 9		GR ~~15C~~ 15L	
HR~~6~~ 10		GR ~~15D~~ 15M	
HQ8		GR 15G	
HQ9		GR 15H	
PD13			GR 15B,H,K,M P,S OR U
PD15			GR 15D
PD17			GR 15F
HL15	GR 15BL		
HL16	GR 15BM		
HL19	GR 15BQ		
HL20	GR 15BR		
HQ12		GR 15Q	
HQ13		GR 15R	

TABLE AA			
CA DESIG	ED-3F004-30,	ED-3F004-31,	ED-3F064-37
HE11	GR ~~15A~~ 15C,BS, BU,BW OR BY		
HL9	GR ~~15BA~~ 15BE	15J	
HL10	GR ~~15BB~~ 15BF	15K	
HR2		GR ~~15A~~	
HR3		GR ~~15B~~	
HQ~~2~~ 7		GR 15E	
HQ~~3~~ 8		GR 15F	
PD12			GR 15A,G,J,L, N,R OR T
PD14			GR 15C
PD16			GR 15E
HL13	GR 15BJ		
HL14	GR 15BK		
HL17	GR 15BN		
HL18	GR 15BP		
HQ10		GR 15N	
HQ11		GR 15P	

SEE PROPRIETARY NOTICE ON SHEET 1
Copyright © 1989 AT&T
Unpublished & Not for Publication
All Rights Reserved

3B INTERFACE CIRCUIT		DWG SIZE C2	ISSUE 13
AT&T	T*3F008-11		SHEET 02

M2

PRINTED IN U.S.A.

FIG. H3

(UNBALANCED CABLES)

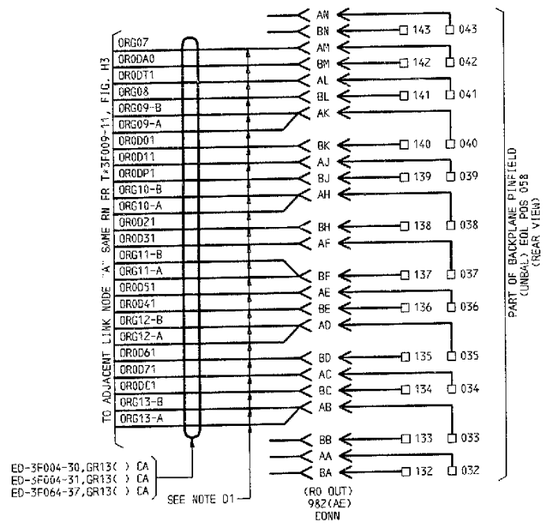

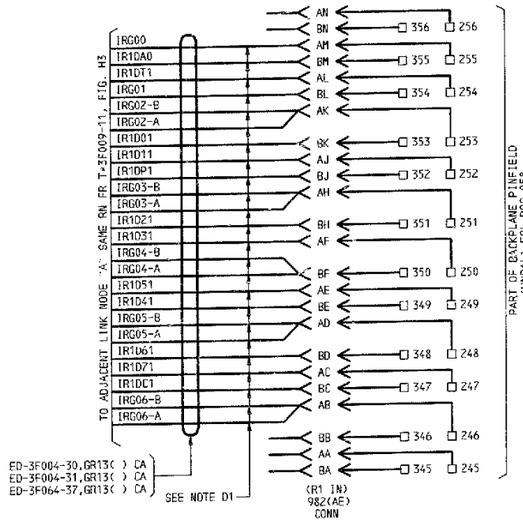

FIG. H5

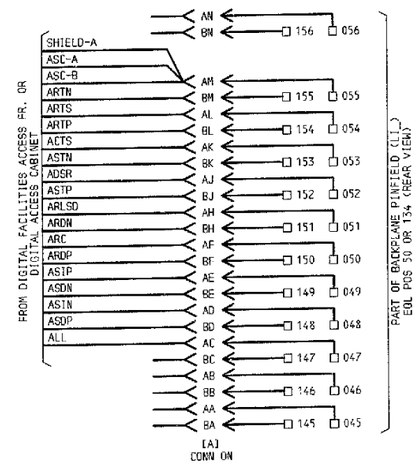

FIG. H6

(5ESS CAB. ONLY)

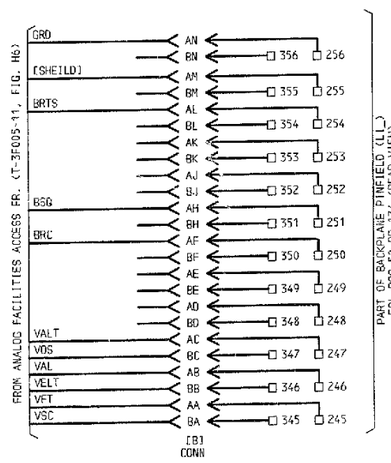

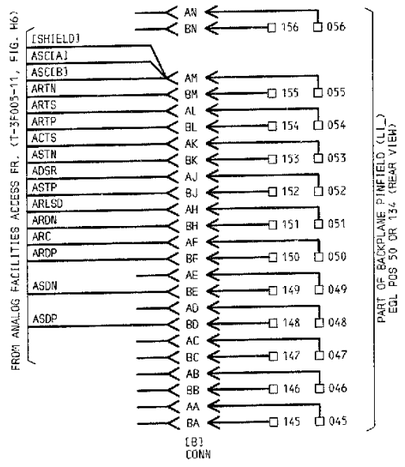

SEE PROPRIETARY NOTICE ON SHEET A1

3B INTERFACE CIRCUIT	DWG SIZE C2	ISSUE 8
AT&T TECHNOLOGIES, INC.	T*3F008-11	SHEET 03

3/10E6

PRINTED IN U.S.A.

FIG. H7

BALANCED RING BUS CABLING
(GROWTH)

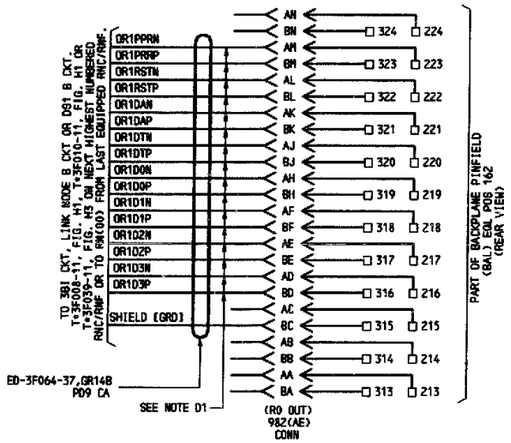

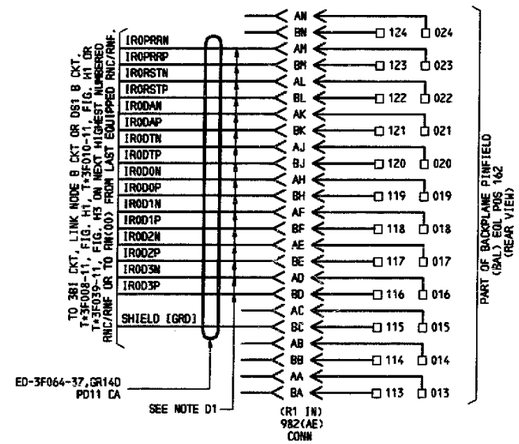

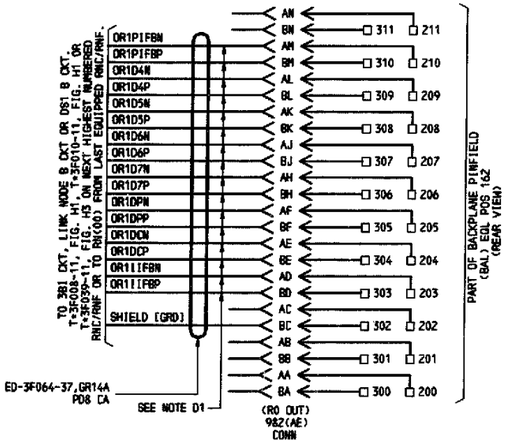

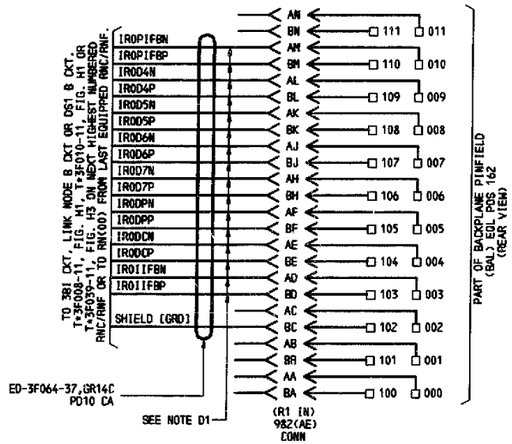

SHOP	FIELD
X	X

MANUFACTURING NOTES

01. THE FIRST LETTER IN EACH LEAD DESIGNATION IS EITHER A "O" FOR OUTPUT OR "I" FOR INPUT. OUTPUT LEADS FROM THIS CIRCUIT WILL CONNECT AS INPUT LEADS OF CONNECTING CIRCUIT. LIKEWISE, INPUT LEADS FROM THIS CIRCUIT WILL CONNECT AS OUTPUT LEADS OF CONNECTING CIRCUIT.

SEE PROPRIETARY NOTICE ON SHEET A1
Copyright © 1988 AT&T
Unpublished & Not for Publication
All Rights Reserved

3B INTERFACE CIRCUIT	DWG SIZE	ISSUE
	C2	10
AT&T CB T*3F008-11		SHEET D4

M2

PRINTED IN U.S.A.

TABLE D (SYSTEM APPLICATION & ASSOC FIG/APP)

APPLICATION	FIG H1	FIG H3	FIG H4	FIG H5	FIG H6	FIG & APP 1 R P M D Z E	FIG & APP 2, Y	FIG & APP 2, Z	FIG & APP 4 R P M D Z E	FIG & APP 5, X	FIG & APP 5, W	FIG & APP 5, V	FIG & APP 5, U	FIG & APP 5, T	FIG & APP 6, ZG, ZJ	FIG & APP 7	FIG & APP 8	FIG & APP 9	FIG & APP 10	FIG & APP 11	FIG H13	FIG	FIG H15	FIG & APP 12	FIG & APP 13 ZC ZD	FIG & APP 14 A ZA ZB	FIG & APP 15
NO. 2 STP	X	X	X			X X . . . X X	X		. . . . X X																X	
CNI (FOR NCP FR J3F011B-1)	X	X	X	X		X . X X X X		X	X . X X X X	X	X	X	X	X												AS REQD
CNI (5ESS CAB. J3F011C-1)	X	X	X	X	X	X . X X X X		X	X . X X X X	X	X	X	X	X												
CNI (3B NCP CAB J3F011D-1	X	X	X	X		X . X X X X		X	X . X X X X	X	X	X	X	X												
1PSS-R4 (J3F011E-1)	X	X	X			X . X X X X		X	X . X X X X	X	X	X	X	X		X	X	X	X							
4ESS/ACI	X	X	X			X . X X X X		X	X . X X X X					X	X			X	X							
NO 2A STP	X	X	X			X . X X X X	X		. . . . X X															X X		
1A ESS 8-1 FR	X	X	X			X . X X X X		X	X . . . X X					X			X	X								
APX E-1 CAB	X	X	X			X . X X X X	X	X	X . X X X X								X	X		X		X	X	X X	X	

FIG. 1

CIRCUIT PACK

OPT	DESIG	CODE	EQL
	3BI	TN914	04-078
	DDSBS	TN698	04-086
Q	NP0	MC3F006-01	04-034
	PWRA	495F1 OR 495FA	04-018
N	RI00	UN122	04-058
N	RI10	UN123	04-068
R	NP0	MC3F007-01	04-034
P	NP0	MC3F012-01	04-034
M	RI00	UN122B	04-058
D OR M	RI10	UN123B	04-068
D	RI01	UN122C	04-058

FROM OPT	FROM DESIG.	FROM EQL	FROM TERM	STRAPPING DESIG.	TO EQL	TO TERM
K	RI00	04-058	118	RI00	04-058	112
K	RI10	04-068	118	RI10	04-068	112

ZE CA_ ED-3F064-37, G46 04-068

FIG. 2

CIRCUIT PACK

OPT	DESIG	CODE	EQL
Y	IFBB	TN918	04-162
Z	IFBA	TN915	04-026
Y	IFBB	TN918	04-026
Z	IFBA	TN915	04-162

FIG. 3

CIRCUIT PACK

OPT	DESIG	CODE	EQL
P	NP0	MC3F012-01	04-034
R	NP0	MC3F007-01	04-034
	PWRA	495F1 OR 495FA	04-018
M	RI00	UN122B	04-058
D OR M	RI10	UN123B	04-068
N	RI00	UN122	04-058
N	RI10	UN123	04-068
D	RI00	UN122C	04-058
ZE	CA_	ED-3F064-37, G46	04-068

FIG. 4

CIRCUIT PACK

OPT	DESIG	CODE	EQL
R	NP1	MC3F007-01	04-118
	PWRB	495F1 OR 495FA	04-178
N	RI01	UN122	04-142
N	RI11	UN123	04-152
M	RI01	UN122B	04-142
D OR M	RI11	UN123B	04-152
P	NP1	MC3F012-01	04-118
D	RI01	UN122C	04-142

FROM OPT	FROM DESIG.	FROM EQL	FROM TERM	STRAPPING DESIG.	TO EQL	TO TERM
K	RI01	04-142	118	RI01	04-142	112
K	RI11	04-152	118	RI11	04-152	112

ZE CA_ ED-3F064-37, G46 04-152

FIG. 5

CIRCUIT PACK

OPT	DESIG	CODE	EQL (LT NODE) OR (RT NODE)
X	LI	MC3F001-01	04-050 OR 04-134
W		MC3F002-01	" "
V		MC3F003-01	" "
U		MC3F004-01	" "
T		MC3F022A1	" "

FIG. 6

CIRCUIT PACK

OPT	DESIG	CODE	EQL
ZG	AP	MC3F011A1	04-042
ZJ	AP	MC3F019A1	04-042
ZK	AP	MC3F011A1B	04-042

FIG. 7

CIRCUIT PACK

OPT	DESIG		CODE	EQL
(LT NODE)	00IA	OR	10A	04-042
	01IA	OR	10A	04-050
(RT NODE)	10IA	OR	10A	04-126
	11IA		10A	04-134

FIG. 8

CIRCUIT PACK

OPT	DESIG		CODE	EQL
(LT NODE)	0IA0	OR	11A	04-042
	0IA1	OR	11A	04-050
(RT NODE)	1IA0	OR	11A	04-126
	1IA1		11A	04-134

FIG. 9

CIRCUIT PACK

OPT	DESIG		CODE	EQL
(LT NODE)	0IA0	OR	12A	04-042
	0IA1	OR	12A	04-050
(RT NODE)	1IA0	OR	12A	04-126
	1IA1		12A	04-134

FIG. 10

CIRCUIT PACK

OPT	DESIG	CODE	EQL
(LT NODE)	0IA0	13A	04-042
	0IA1	13A	04-050
(RT NODE)	1IA0	13A	04-126
	1IA1	13A	04-134

FIG. 11

CIRCUIT PACK

OPT	DESIG	CODE	EQL
(LT NODE)	1L4S0	1316	04-042
	OR 1L4S1	1316	04-050
(RT NODE)	OR 0L4S0	1316	04-126
	OR 0L4S1	1316	04-134

FIG. 12

CIRCUIT PACK

OPT	DESIG	CODE	EQL
	1MDL0	TN1317	04-126
	1MDL1	TN1317	04-134

SEE PROPRIETARY NOTICE ON SHEET 1
Copyright © 1991 AT&T
Unpublished & Not for Publication
All Rights Reserved

3B INTERFACE CIRCUIT		
	DWG SIZE C2	ISSUE 12
AT&T	T*3F008-11	SHEET 05

M2

PRINTED IN U.S.A.

STRAPPING						
FROM				TO		
OPT	DESIG	EQL	TERM	DESIG	EQL	TERM
K	IRN0	04-058	118	IRN0	04-058	112
K	IRN0	04-068	118	IRN0	04-068	112
K	IRN1	04-142	118	IRN1	04-142	112
K	IRN1	04-152	118	IRN1	04-152	112

FIG. 13

CIRCUIT PACK			
OPT	DESIG	CODE	EQL
ZD (LT MODE)	IRN0	MC3F014A1	04-058
ZD (RT MODE)	IRN1	MC3F014A1	04-142
ZC (LT MODE)	IRN0	MC3F018A1	04-058
ZP (RT MODE)	IRN1	MC3F018A1	04-142
ZN (LT MODE)	IRN0	MC3F026A1	04-058
ZS (LT MODE)	IRNR	MC3F028A1	04-058

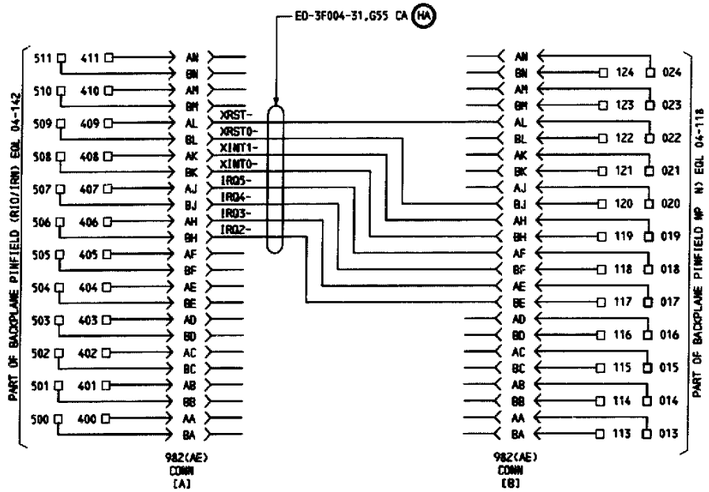

FIG. 14

CIRCUIT PACK			
OPT	DESIG	CODE	EQL
A (LT MODE)	IFBA	TN1506	04-026
A (RT MODE)	IFBB	TN1506	04-162
ZA (LT MODE)	IFBA	TN1508	04-026
ZA (RT MODE)	IFBB	TN1508	04-162
ZB (LT MODE)	IFBA	TN1509	04-026
ZB (RT MODE)	IFBB	TN1509	04-126

FIG. 15

CIRCUIT PACK			
OPT	DESIG	CODE	EQL
(LT MODE)	IA	14A	04-050
(RT MODE)	IA	14A	04-134

FIG. 16

CIRCUIT PACK			
OPT	DESIG	CODE	EQL
	IMDL0	TN1640	04-126
	IMDL1	TN1640	04-134

FIG. 17

CIRCUIT PACK			
OPT	DESIG	CODE	EQL
	LT4E	MC3F020A1	04-042

FIG. 18

CIRCUIT PACK			
OPT	DESIG	CODE	EQL
ZL	EMSB/NFC	MC3F021A1	04-126
ZM	EMSB/800	MC3F021A1	04-126

SEE PROPRIETARY NOTICE ON SHEET A1
Copyright © 1994 AT&T
Unpublished & Not for Publication
All Rights Reserved

3B INTERFACE CIRCUIT		
	DWG SIZE C2	ISSUE 13
AT&T	T*3F008-11	SHEET D6

M2

PRINTED IN U.S.A.

FIG. H10

FOR RS232C PROTOCOL

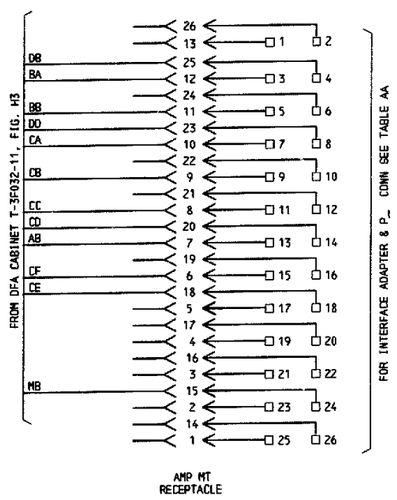

FIG. H11

FOR V.35 PROTOCOL

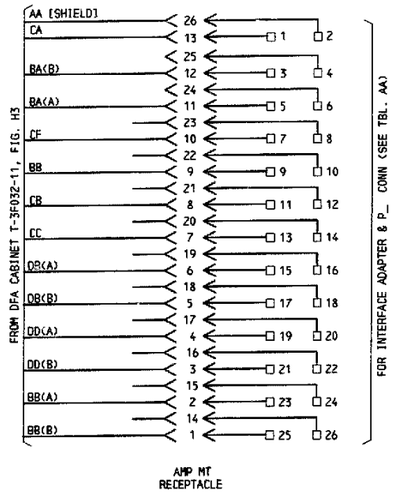

FIG. H12

FOR RS449 PROTOCOL

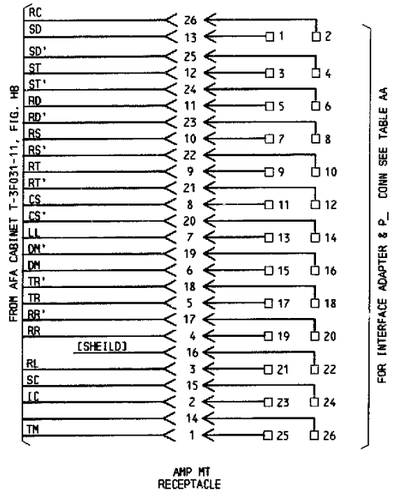

FIG. H13

FOR RS232C PROTOCOL

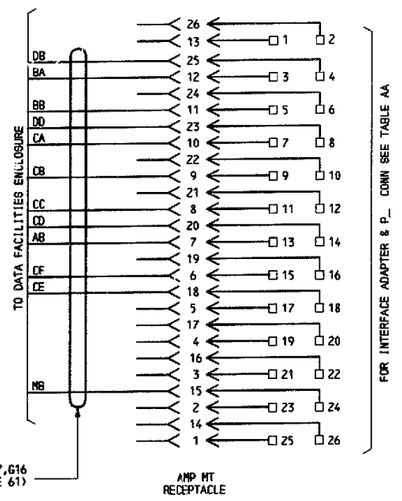

FIG. H14

FOR V.35 PROTOCOL

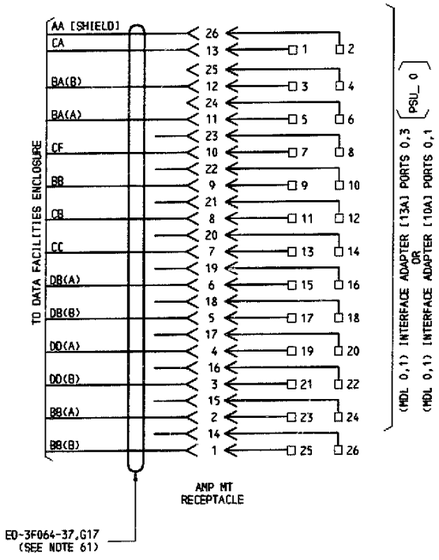

FIG. H15

FOR RS449 PROTOCOL

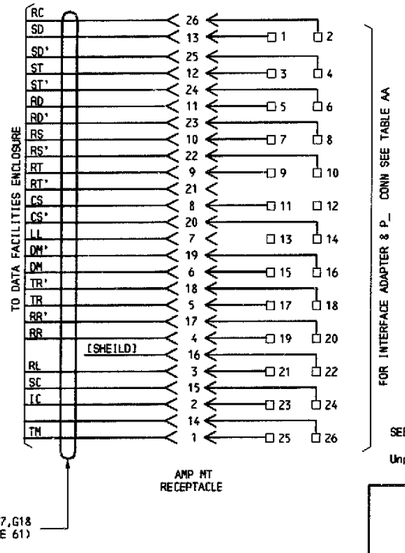

TABLE AA

(INTERFACE 11A OR 12A ADAPTER & P_ CONN)

IA NAME	IA EQL	P- CONN & EQL
0IA0	04-042R	07-042
		05-042
		03-042
		01-042
0IA1	04-050R	07-050
		05-050
		03-050
		01-050
1IA0	04-126R	07-126
		05-126
		03-126
		01-126
1IA1	04-134R	07-134
		05-134
		03-134
		01-134

SEE PROPRIETARY NOTICE ON SHEET 1
Copyright © 1991 AT&T
Unpublished & Not for Publication
All Rights Reserved

3B INTERFACE CIRCUIT	DWG SIZE C2	ISSUE 12
AT&T	T*3F008-11	SHEET 07

M2

PRINTED IN U.S.A.

FIG. H2

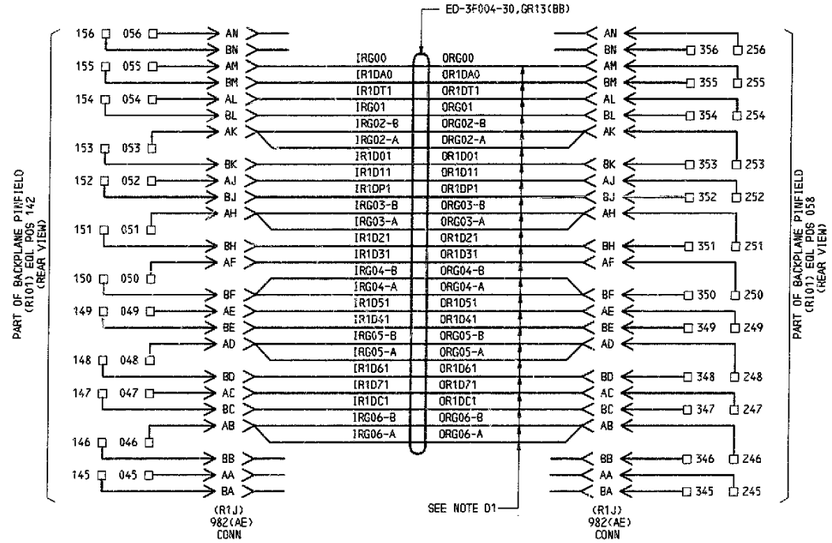

FIG. H8

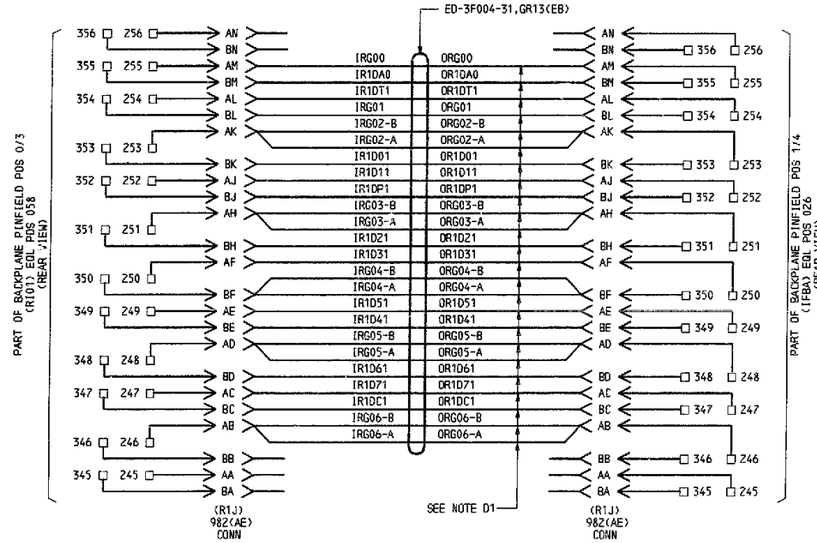

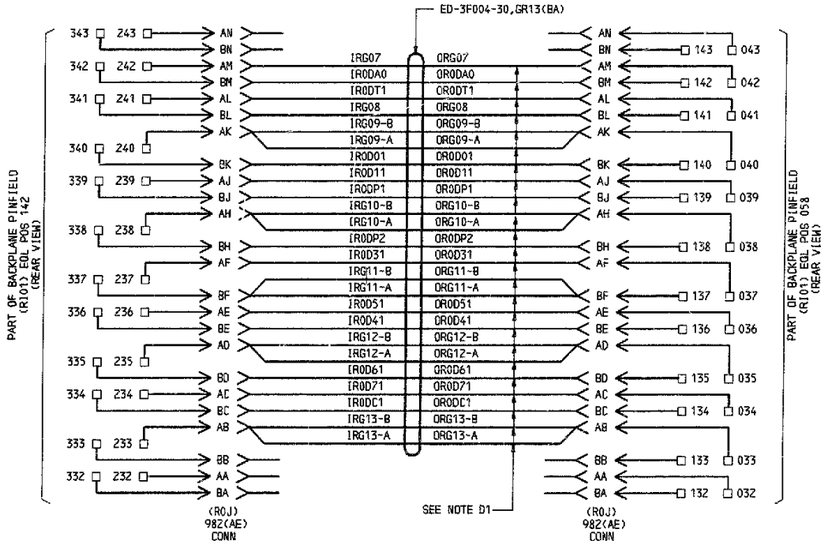

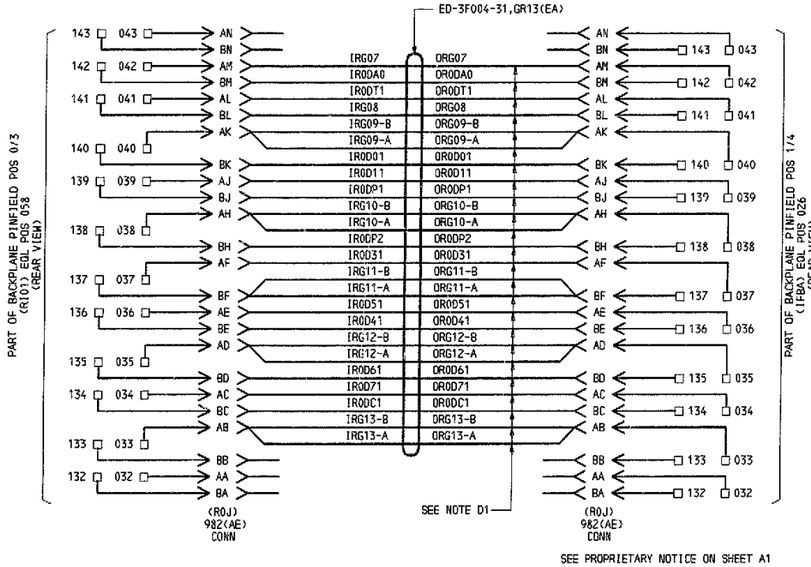

SEE PROPRIETARY NOTICE ON SHEET A1

3B INTERFACE CIRCUIT		
	DWG SIZE C2	ISSUE 9
AT&T TECHNOLOGIES, INC.	T*3F008-11	SHEET D8

M2

PRINTED IN U.S.A.

FIG. H9

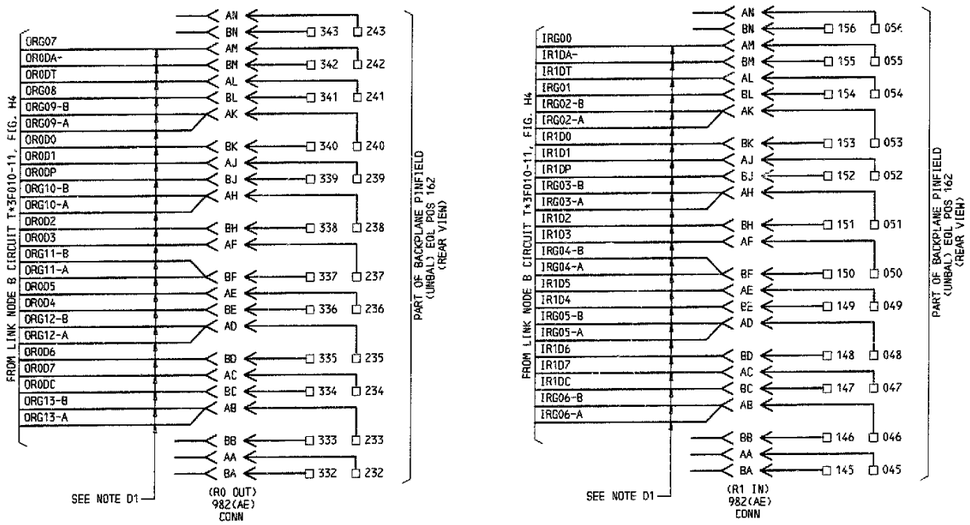

FIG. H16

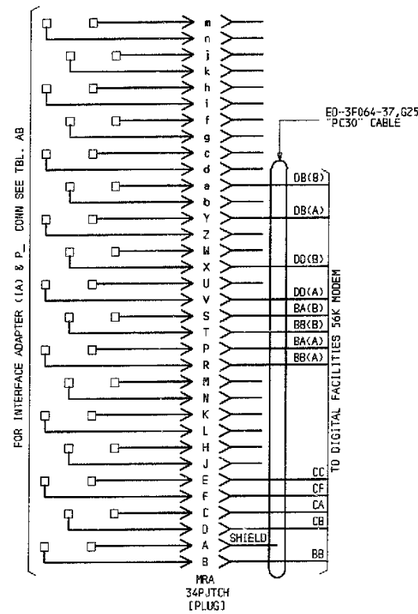

TABLE AB
(14A INTERFACE ADAPTER & P-CONN)

IA NAME	P_ CONN EQL.
01A1	04-050
11A1	04-134

SEE PROPRIETARY NOTICE ON SHEET A1

3B INTERFACE CIRCUIT		
	DWG SIZE C2	ISSUE 9
AT&T TECHNOLOGIES, INC.	T*3F008-11	SHEET D9

M2

PRINTED IN U.S.A.