X-75515

ENGINEERING REFERENCE DATA

TOOLS AND GAUGES

BELL TELEPHONE LABORATORIES

TOOLS AND GAUGES

G D Frampton

G. D. FRAMPTON

G. D. FRAMPTON

X-75515

ENGINEERING REFERENCE DATA

TOOLS AND GAUGES

BELL TELEPHONE LABORATORIES

This bulletin is the property of

B E L L T E L E P H O N E L A B O R A T O R I E S

It is not released for publication.

When no longer needed, it should be returned

to the Standards Applications Group

Issued to

Name_____

Department_____

Location_____

TABLE OF CONTENTS

TOOLS

X-75515

GAUGES

INDEX

X-75515

X-75515

X-75515

INDEX

X-75515

GAUGE

INTRODUCTION

This is one of a series of Engineering Reference Data Bulletins containing information on tools and gauges designed by the Bell Telephone Laboratories, for other than Military Applications, and manufactured by the Western Electric Company or by other suppliers in accordance with specifications prepared by the Laboratories. It is intended primarily for use by engineers of the Laboratories and contains information on apparatus which may be rated AT&TCo Standard or A&M Only; codes classified ML; or codes designated for nonassociate use. In addition, such "D Specifications," "KS Specifications," "Outside Plant," and "Western Electric Company Installation Department" tools and gauges as appear likely to be used on new apparatus and equipment and are in regular production are included. Codes rated Manufacture Discontinued are not included. In general, tools which are standard commercial products are not included.

No items have been designated in this bulletin as PREFERRED. Each tool or gauge in good standing performs some function that could not be performed by any other tool or gauge and therefore none of them can be rated NONPREFERRED.

Certain tools or gauges are included in the bulletin although they are used on obsolescent apparatus; however, no other tool or gauge can be used in their place and they may be required when new apparatus is designed.

X-75515

It is planned to bring this bulletin up-to-date periodically. However, the information contained herein may not be complete and ratings of the items are not shown. Therefore, the final selection of apparatus should be made on the basis of the usual sources of information such as the Western Electric Apparatus Card Catalog, the Manufacturing Specifications, and price data. For information regarding the output of apparatus refer to the Western Electric Report A-822.1.

The bulletin may include some codes of apparatus for which catalog cards will not be found in the Western Electric Apparatus Card Catalog. In general, these codes apply to apparatus where it is believed that the associated telephone companies will have no need for apparatus card catalog information and orders for the apparatus from the field are not expected.

When apparatus which is not listed on a white card in the Western Electric Apparatus Card Catalog is selected for use in new applications, the Standards Engineer, Dept. 5241, Bell Telephone Laboratories, 463 West Street, New York, should be notified of the new use and probable demand so that consideration can be given to rerating the apparatus. When such new applications are made within the Laboratories, the selection should first be discussed with the department responsible for the design of the apparatus.

GENERAL:

All tools and gauges listed are steel except where noted. They are hardened as required for normal service. The usages mentioned for tools or gauges are not necessarily up-to-date but are given as examples.

GENERAL PURPOSE TOOLS
SECTIONS 1-5

GENERAL PURPOSE TOOLS
SECTIONS 1-5

SLOT SIZE 0.010 INCH

D-167912 Separator Adjuster

Used in applying the D-167911 magnetic separator to the core of Y-type relays.

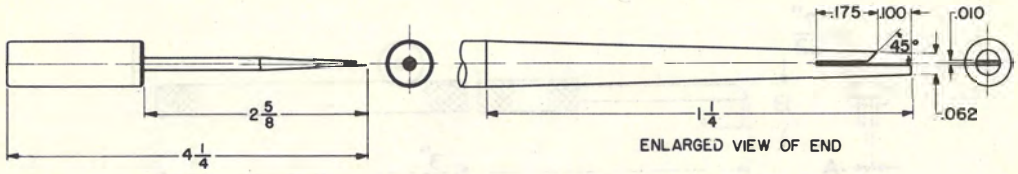

SLOT SIZE 0.014 INCH

330B Tool

One end used for adjusting the trip fingers and the other end for adjusting the trip finger stops on horizontal trip rods. Used on panel line finder, trunk finder, and call distributing B-link elevator apparatus.

X-75515

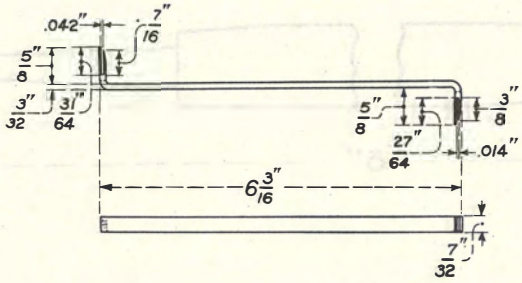

524A and 524B Tools

Used for adjusting the upper and lower edges, respectively of the outer movable springs on multicontact relays. Handles have insulated covers.

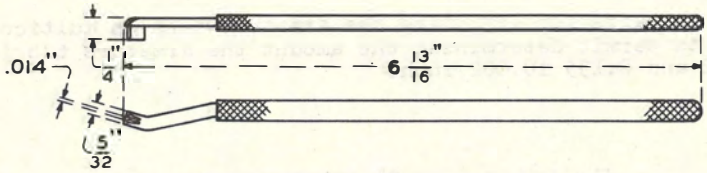

524A

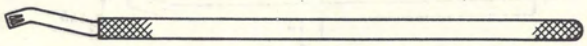

524B

SLOT SIZE 0.015 INCH

505A Tool

Used in adjusting U- and Y-type relays. Handles have insulated covers. Dimension A equals 0.015 inch. Dimension B equals 1/4 inch.

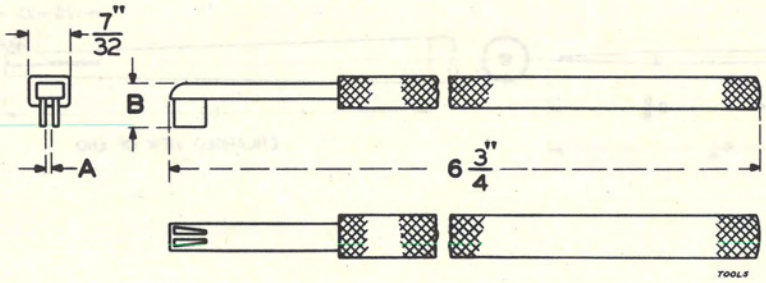

638A Tool

Used in adjusting the replacement fixed contacts and twin contacts on AF-, AG-, and AJ-type relays. One end is arranged to adjust the replacement fixed contact and the other end is arranged to adjust the twin contacts. Slot sizes are 0.0150 and 0.0225 inch.

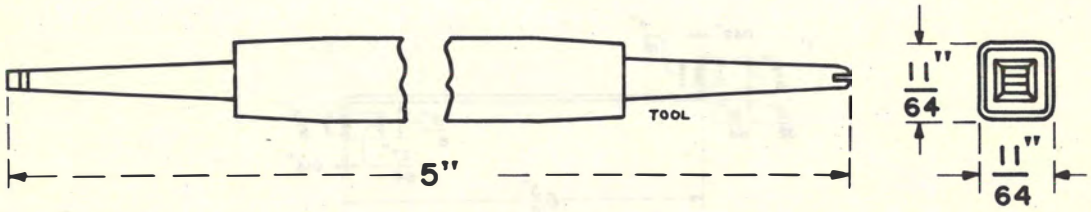

SLOT SIZE 0.016 ±0.002 INCH

606A Tool

Flat metal bar. Used in pairs for adjusting the armature tabs on multicontact relays. One end is calibrated to permit determining the amount the armature tab is bent. Slot sizes are 0.016 ±0.002 and 0.135 ±0.002 inch.

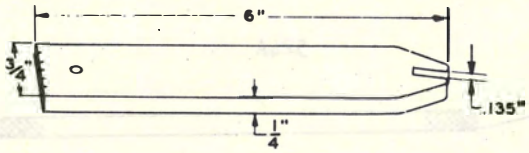

SLOT SIZE 0.018 INCH

270 Tool

Used in adjusting contact springs of Stromberg Carlson relays. Also used on precision-type interrupters. Equipped with a hard-rubber handle.

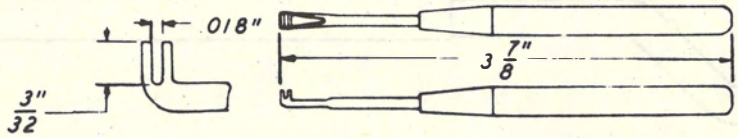

363 Tool

Used to adjust rotor brush springs and feeder springs of the 206- and similar-type selectors. Equipped with a handle of insulating material.

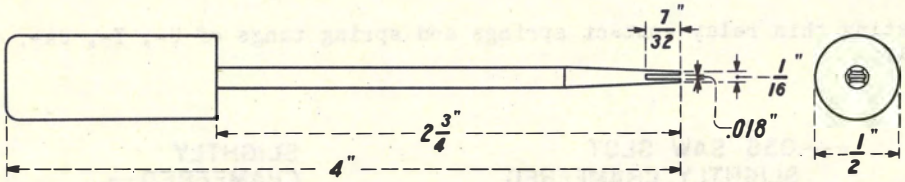

X-75515

534E Tool

See 534A Tool under SLOT SIZE 0.025 INCH.
534E has X dimension of 0.018 inch.

535A Tool

Used in adjusting bifurcated springs on vertical units of crossbar switches. Also for use on multicontact relays. Handle is insulated. Slot at end measures 0.018 inch.

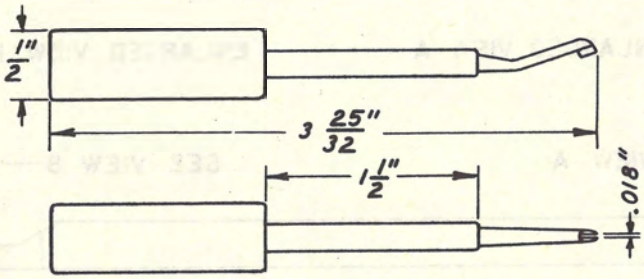

SLOT SIZE 0.018 INCH

549A Tool

Used in adjusting the centering springs for tension and stud gap on crossbar switches. Handle is insulated. Slot at end measures 0.018 inch.

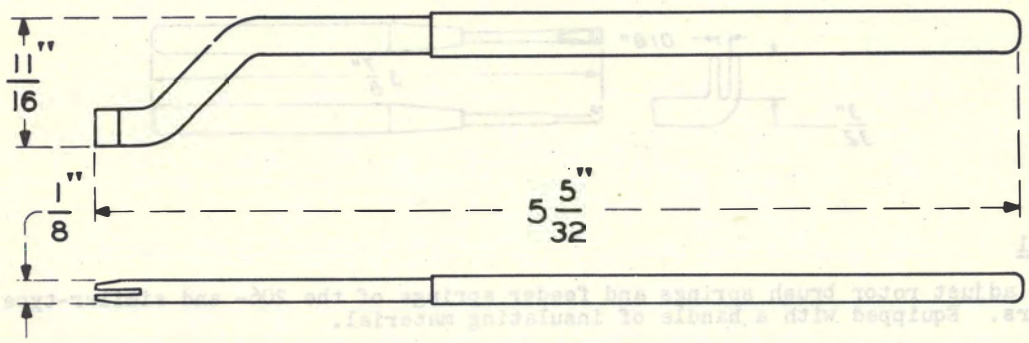

R-2753 Adjuster

Used for adjusting thin relay contact springs and spring tangs of U-, Y-, UA-, and flat-type relays.

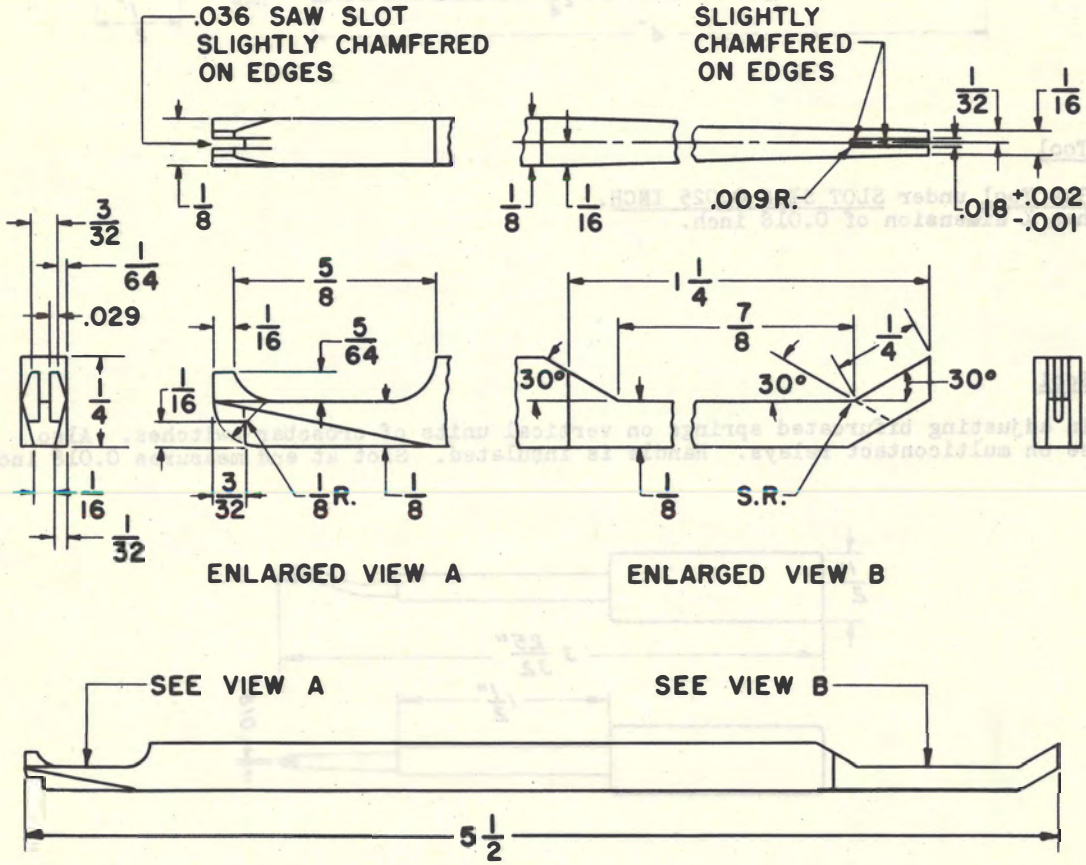

SLOT SIZE 0.019 INCH

648A Tool

Used in adjusting the auxiliary moving contact springs of KS-13835 readers in AMA systems.

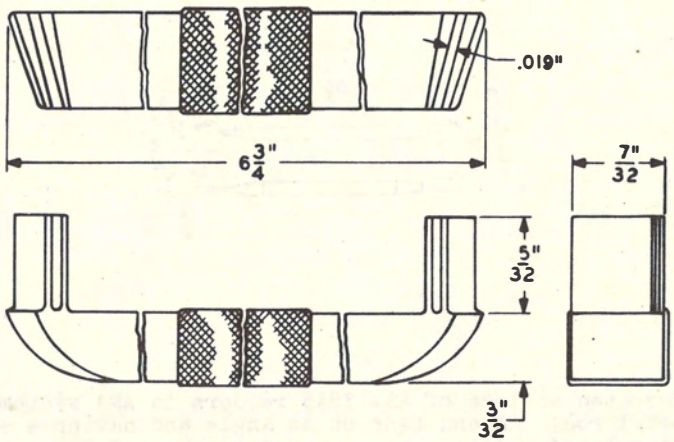

X-75515

SLOT SIZE 0.020 INCH

380A Tool

Used in adjusting multiple brush springs in panel-type systems. Equipped with an insulated handle.

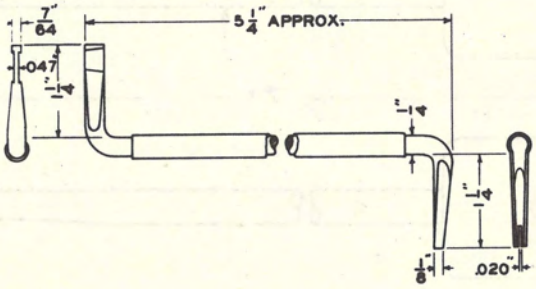

SLOT SIZE 0.020 INCH

415B Tool

Used in the maintenance of horizontal-type relays in step-by-step-type dial telephone systems. Also used on 197- and 198-type switches. Handle is insulated. Dimension A equals 5/64 inch. Dimension B equals 0.020 inch.

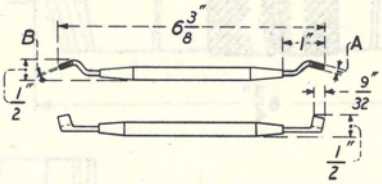

535B Tool

Used in adjusting bifurcated springs of KS-13835 readers in AMA systems. This tool consists of a round metal rod; one end bent on an angle and having a slot, the other end provided with an insulated handle. Slot at end measures 0.020 inch.
See 535A Tool under SLOT SIZE 0.018 INCH.

583A Tool

Used in adjusting flexible multiple brushes in panel-type dial telephone systems.

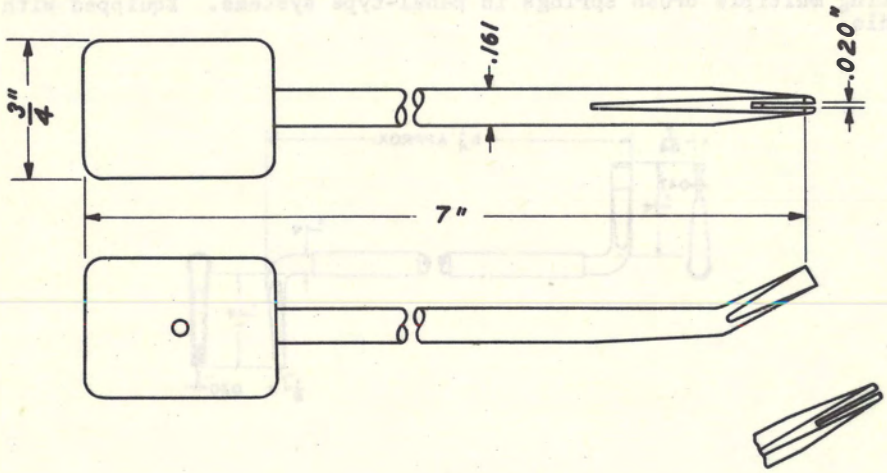

SLOT SIZE 0.20 INCH

619A Tool

An offset metal blade having two slots at one end and a handle of insulating material at the other end. Used in adjusting the commutator wiper holder in panel-type dial telephone central offices. Slots at end measure 0.020 inch.

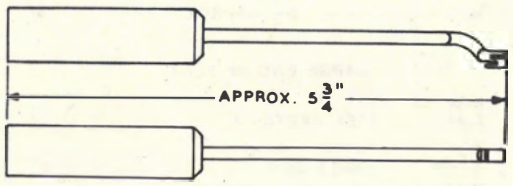

626A Tool

Used in adjusting the balancing spring of crossbar switches. Consists of a metal bar, one end having a double offset containing a slot. The handle is covered with a sleeve of insulating material.

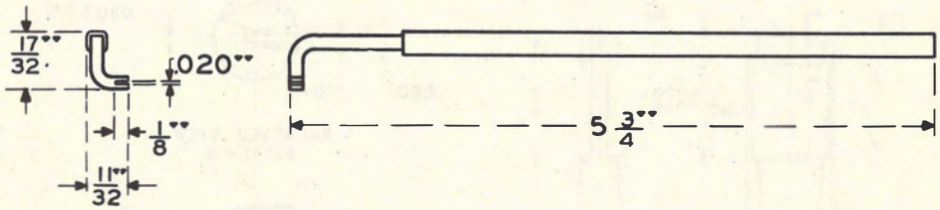

X-75515

SLOT SIZE 0.020 INCH

R-2830 Adjuster

Used for adjusting multiple brush springs for tension and height. An insulating wrapping on middle section forms a handle.

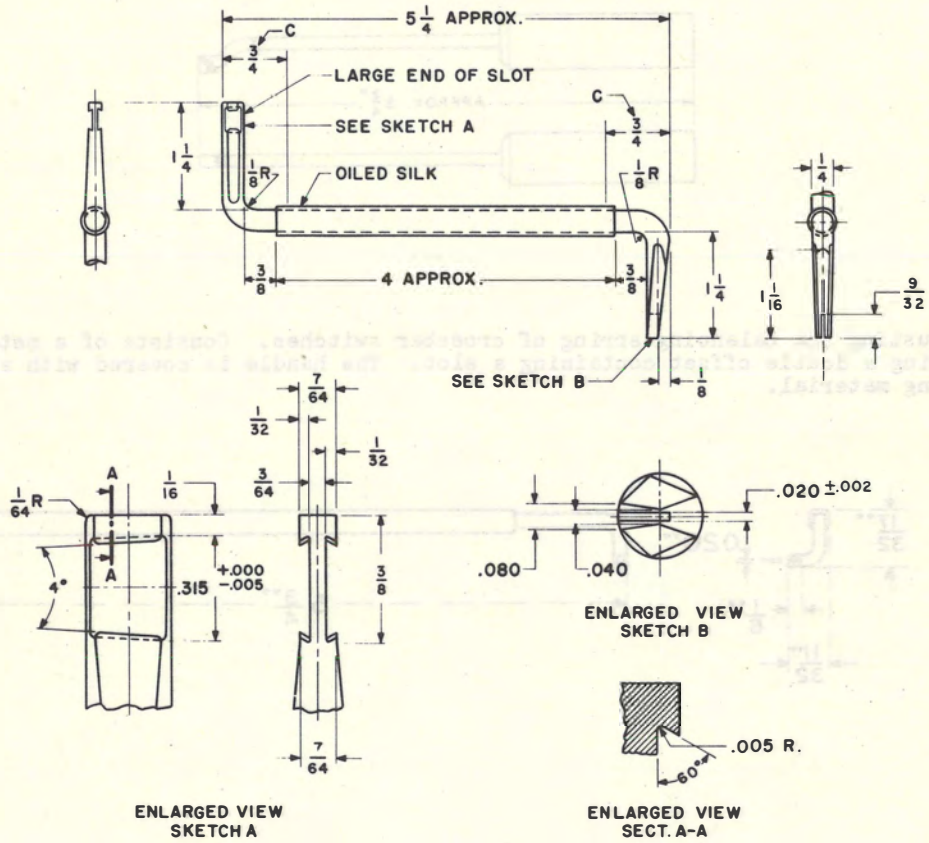

SLOT SIZE 0.0225 INCH

638A Tool

See 638A Tool under SLOT SIZE 0.015 INCH.

SLOT SIZE 0.023 INCH

130 Tool

Used in adjusting the middle bank of springs on 125-type relays.

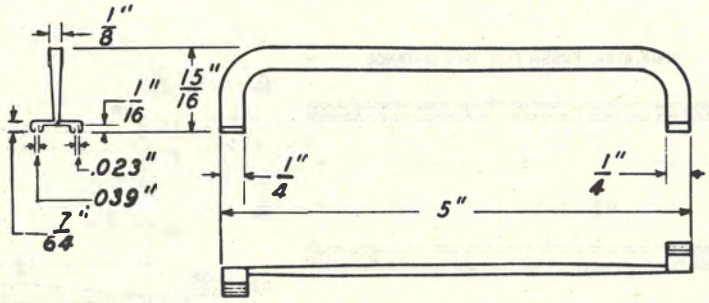

224 Tool

Used in adjusting the tension of the contact springs on the 10- and 14-type brushes when assembled with commutators on frame. Also for use on regulators and the KS-13835 readers of the AMA system.

X-75515

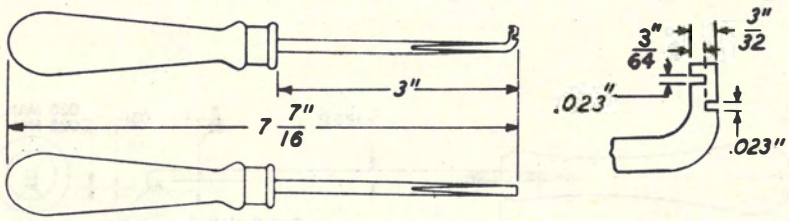

SLOT SIZE 0.024 INCH

506A Tool

See 505A Tool under SLOT SIZE 0.015 INCH.
For 506A Tool, dimension A equals 0.024 inch and dimension B equals 1/4 inch.

SLOT SIZE 0.024 INCH

D-157398 Spring Adjuster

Used in adjusting the outer contact springs of the 444-type jacks. Handle is insulated with cotton sleeving.

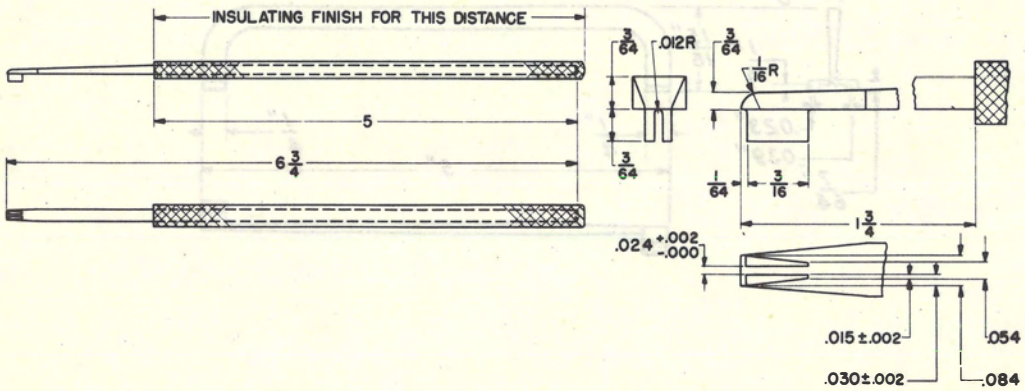

ENLARGED VIEWS OF END

D-178122 Spring Adjuster

Used for adjusting reading contact springs of the KS-13835 reader.

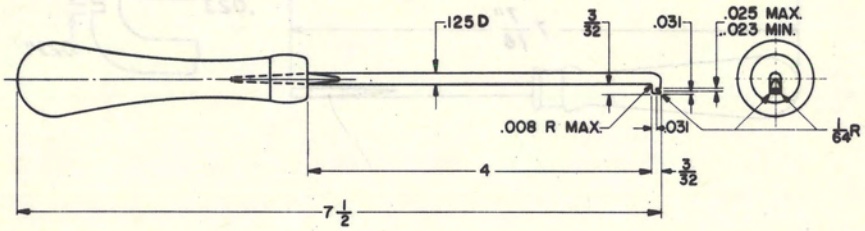

SLOT SIZE 0.025 INCH

179 Tool

Used in adjusting contact springs of 197- and 198-type switches, 50-type dial testers, 202-, 207-, and 208-type selectors, and automatic control devices of teletypewriters.

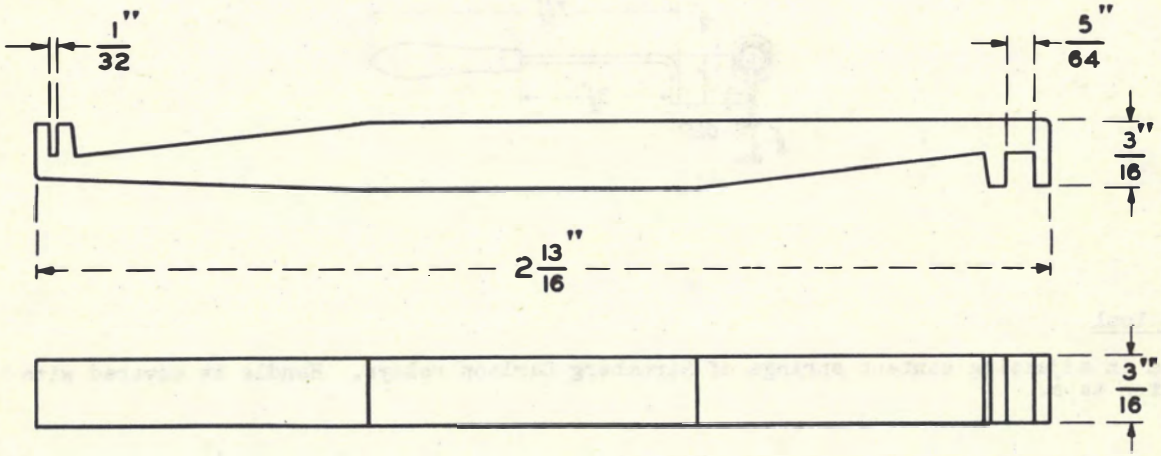

X-75515

235 Tool

Used to adjust the lower row of contact springs on sequence switches. Also for use on 155A- and 157-type interrupters.

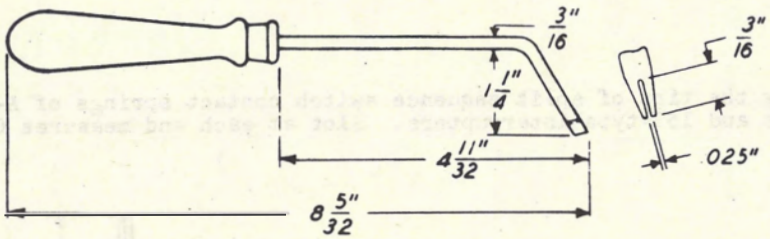

SLOT SIZE 0.025 INCH

256 Tool

Used in adjusting the top row of sequence switch springs and also multiple brush springs in panel-type dial equipments.

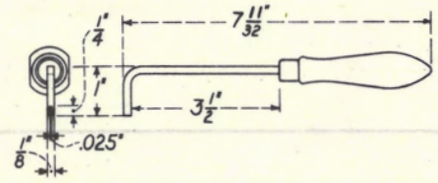

268 Tool

Used in adjusting contact springs of Stromberg Carlson relays. Handle is covered with cotton tape.

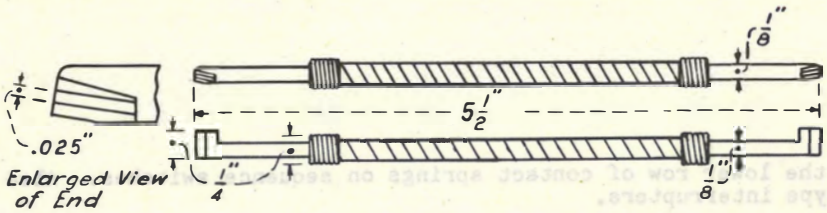

462A Tool

Used in adjusting the tips of split sequence switch contact springs of A- and B-type sequence switches and 157-type interrupters. Slot at each end measures 0.025.

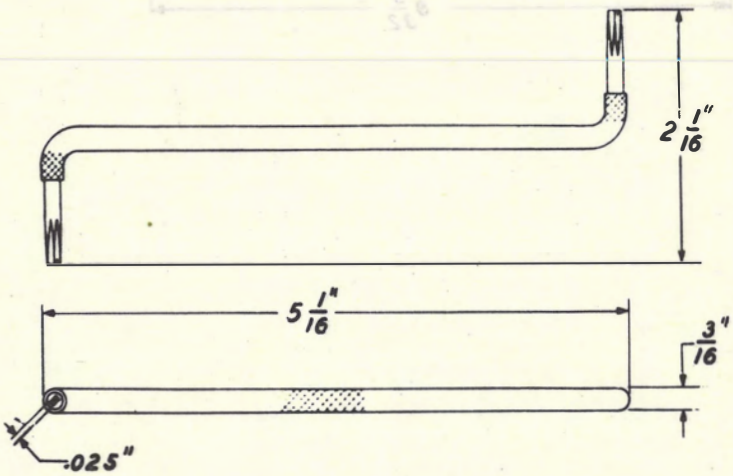

SLOT SIZE 0.025 INCH

534A Tool

Used in adjusting the springs of the holding off-normal spring assemblies in crossbar switches. The two ends are insulated from each other and the center portion is covered with insulating material to serve as a handle. Dimension X equals 0.025 inch.

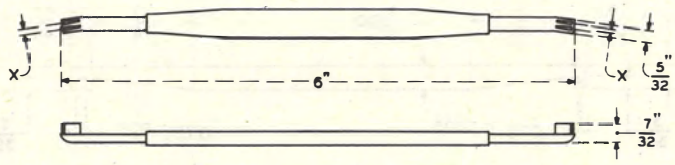

534F Tool

Used in adjusting balancing springs on wire spring relays.
On 534F Tool, dimension X equals 0.025 inch. See 534A Tool under SLOT SIZE 0.025 INCH.

625A Tool

A metal bar with a slot at each end. Used in adjusting the springs of the off-normal spring assembly of the 214A selector.

X-75515

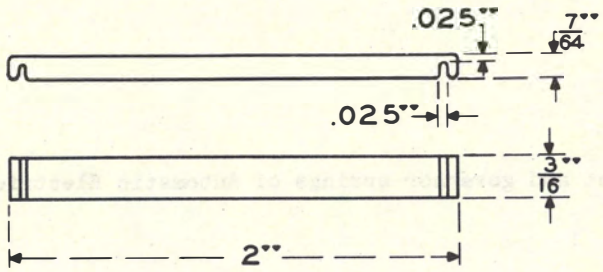

SLOT SIZE 0.025 INCH

R-2425 Adjuster

Used to adjust the stop unit springs on 207- and 208-type selectors.

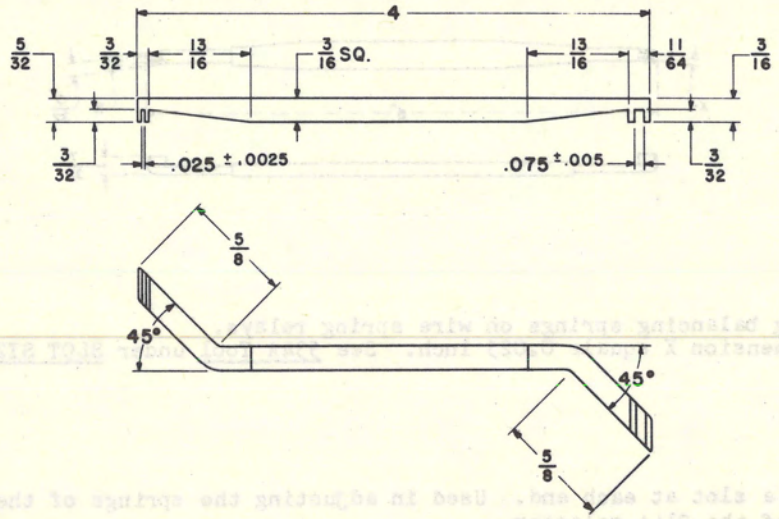

SLOT SIZE 0.027 INCH

272 Tool

Used in adjusting contact and governor springs of Automatic Electric Company dials. Handle is insulated.

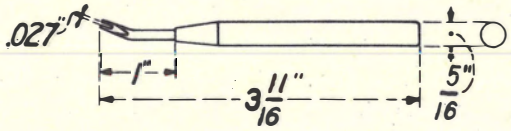

SLOT SIZE 0.030 INCH

466A Tool

Used in adjusting contact springs on hand set mountings, desk stands, station keys, and other station apparatus. Also used for adjusting contact springs and other parts of coin collectors. Slots measure 0.030 and 0.057 inch.

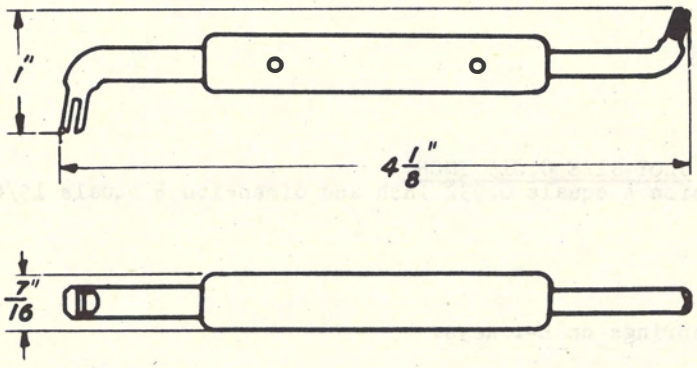

SLOT SIZE 0.031 $^{+0.002}_{-0.001}$ INCH

X-75515

259 Tool

Used in adjusting the tension of relay springs. There is a cotton sleeve on the handle.

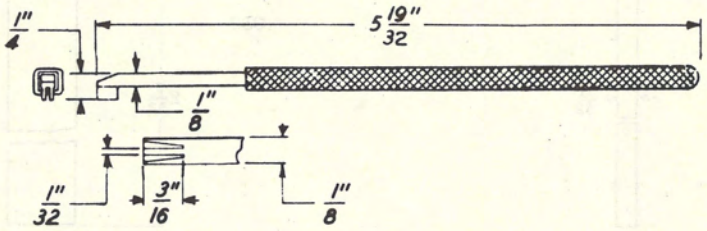

SLOT SIZE 0.031 INCH

534B Tool

See 534A Tool under SLOT SIZE 0.025 INCH.
On 534B Tool, dimension X equals 0.031 inch.

SLOT SIZE 0.031 INCH

534G Tool

See 534F Tool under SLOT SIZE 0.025 INCH.
On 534G Tool, dimension X equals 0.031 inch.

SLOT SIZE 0.032 INCH

507A Tool

See 505A Tool under SLOT SIZE 0.015 INCH.
On 507A Tool, dimension A equals 0.032 inch and dimension B equals 15/64 inch.

R-7340 Adjuster

Used for adjusting springs on E-1 keys.

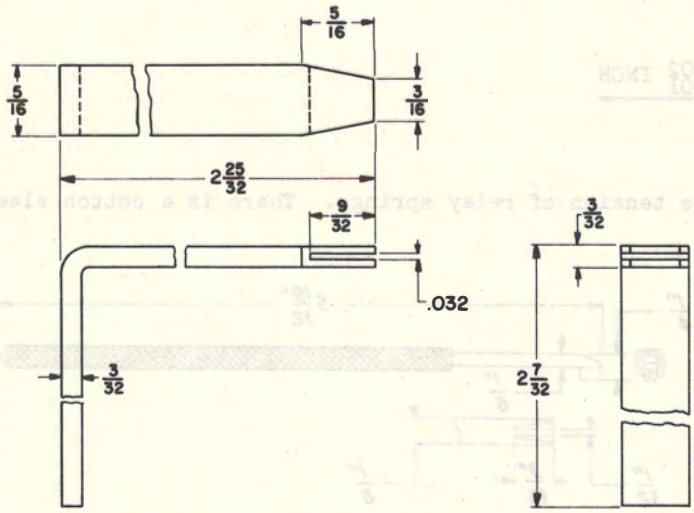

SLOT SIZE 0.034 INCH

582A Tool

Used in adjusting the 0.030 inch spring tangs next to the core on UA-type relays. Handle is insulated.

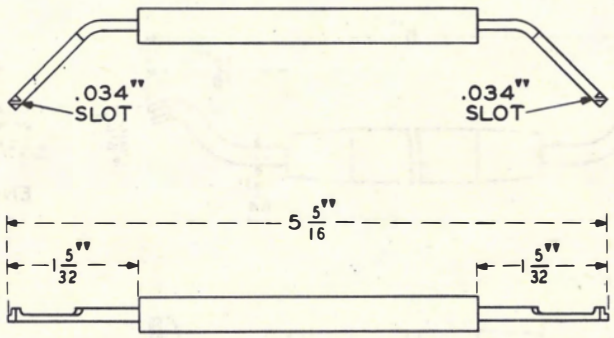

SLOT SIZE 0.035 INCH

X-75515

416B Tool

See 415B Tool under SLOT SIZE 0.020 INCH.
On 416B Tool, dimension A equals 7/64 inch and dimension B equals 0.035 inch.

432B Tool

Used in adjusting the vertical spacing of multiple bank terminals of panel-type dial systems. Handle is insulated.

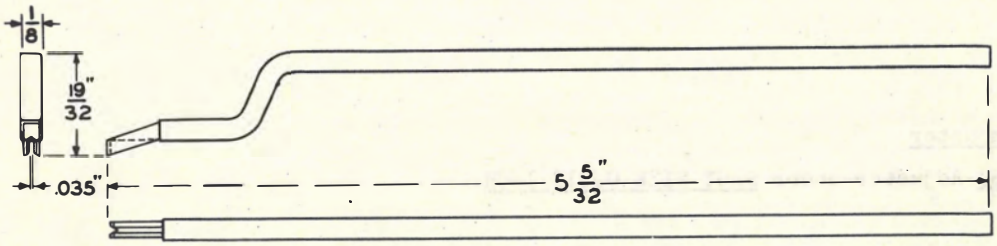

534C Tool

See 534A Tool under SLOT SIZE 0.025 INCH.
On 534C Tool, dimension X equals 0.035 inch.

SLOT SIZE 0.035 INCH

579A Tool

Used in adjusting the vertical unit multiple contact springs on crossbar switches. Consists of a round handle of insulating material equipped at each end with a slotted metal blade.

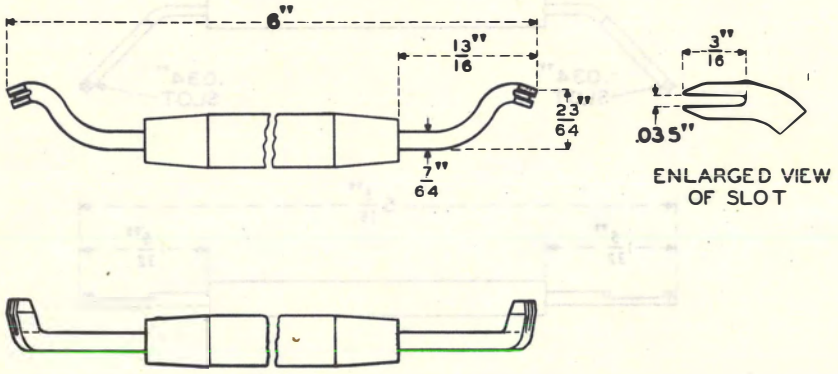

SLOT SIZE 0.036 INCH

412A Tool

Used in adjusting draw-bar locating springs of 229- and 230-type relays in dial systems. Also used on 211- and 212-type switches. Equipped with an insulated handle.

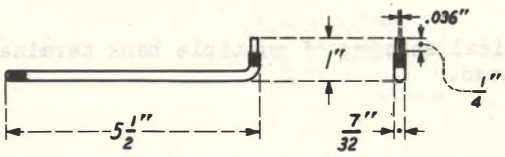

R-2753 Adjuster

See R-2753 Adjuster under SLOT SIZE 0.018 INCH.

SLOT SIZE 0.038 INCH

143 Tool

Used in adjusting springs of horizontal-type keys.

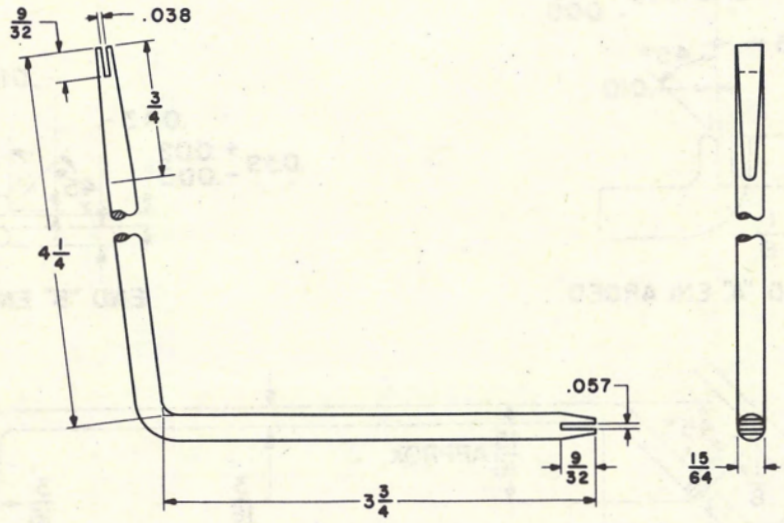

X-75515

SLOT SIZE 0.039 INCH

130 Tool

See 130 Tool under SLOT SIZE 0.023 INCH.

SLOT SIZE 0.039 INCH

R-2294 Bender

Used for adjusting trip fingers on vertical-type trip rods for height.

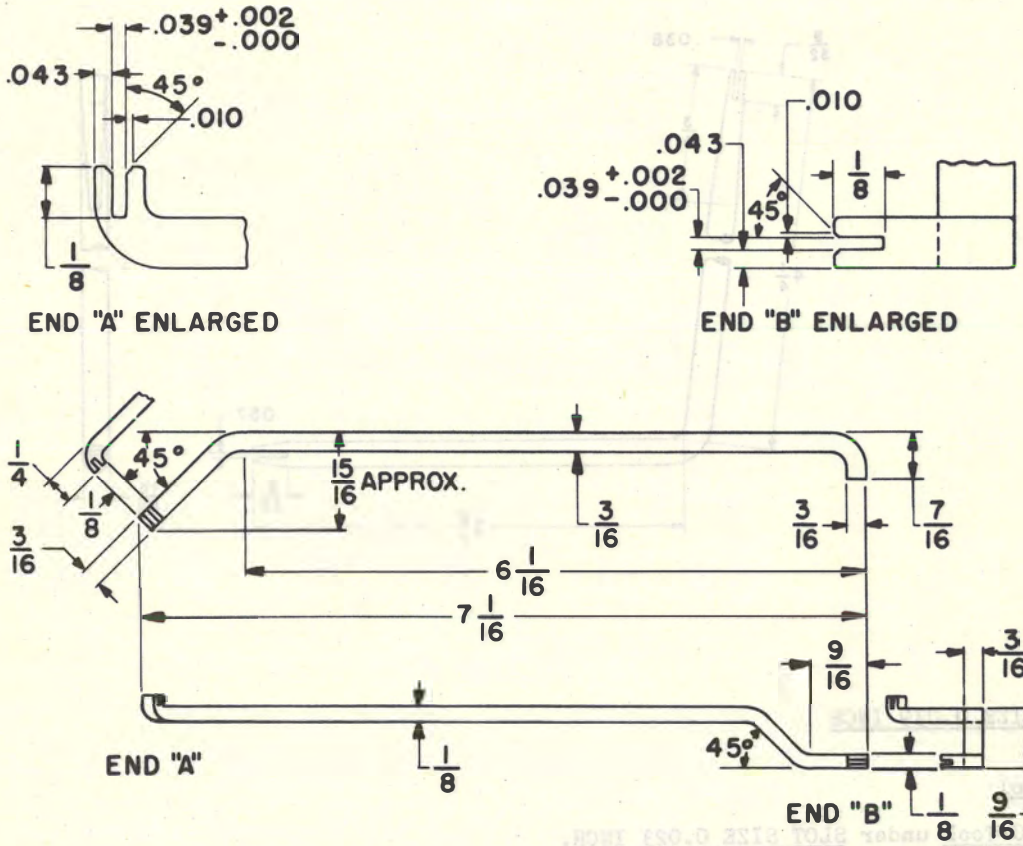

SLOT SIZE 0.040 INCH

303 Tool

Used to adjust interrupter spring and retaining pawl on 206-type selectors; also used to adjust springs on vertical-type keys.

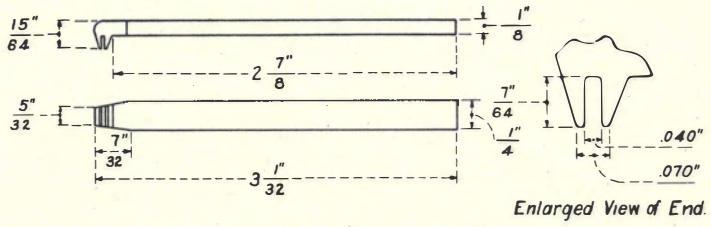

SLOT SIZE 0.040 INCH

628A Tool

Used for disengaging the balance spring on wire spring relays. Consists of a round molded handle of insulating material with a metal blade at each end. Each blade has a right-angle offset with a 0.040 inch slot near the end.

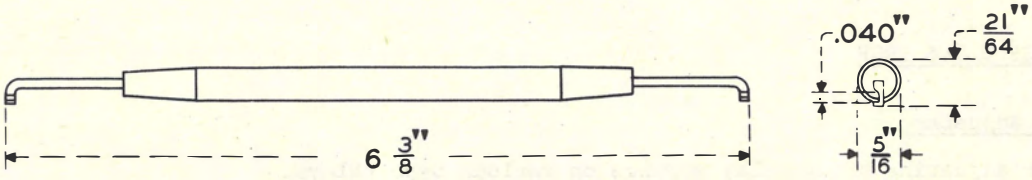

SLOT SIZE 0.042 INCH

330B Tool

See 330B Tool under SLOT SIZE 0.014 INCH.

X-75515

SLOT SIZE 0.043 INCH

264 Tool

Used in adjusting the retractile spring lug of the 208-type relay.

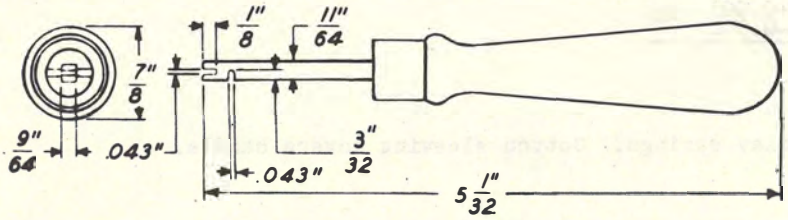

534D Tool

See 534A Tool under SLOT SIZE 0.025 INCH.
On 534D Tool, dimension X equals 0.043 inch.

SLOT SIZE 0.043 INCH

534H Tool

See 534F Tool under SLOT SIZE 0.025 INCH.
On 534H Tool, dimension X equals 0.043 inch.

SLOT SIZE 0.045 INCH

R-62737 Adjuster

Used for adjusting thick relay springs on various type relays.

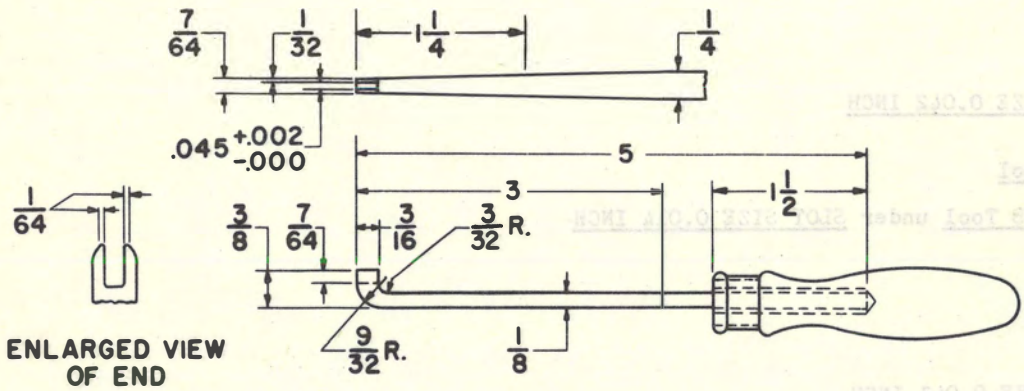

SLOT SIZE 0.045 +0.001 -0.001 INCH

300 Tool

Used to adjust relay springs. Cotton sleeving covers handle.

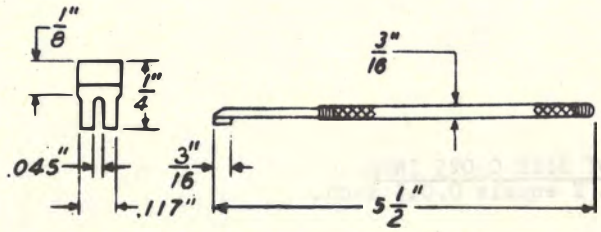

SLOT SIZE 0.045 $^{+0.004}_{-0.004}$ INCH

215 Tool

Used in adjusting the tension of the A-cam roller springs of sequence switches on panel-type equipments. There is a cotton sleeving on handle.

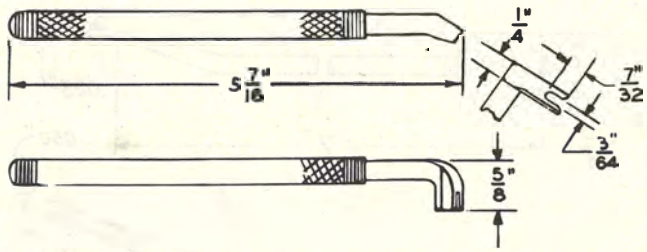

SLOT SIZE 0.047 INCH

50B Tool

Used in adjusting relay springs. Handle is insulated.

X-75515

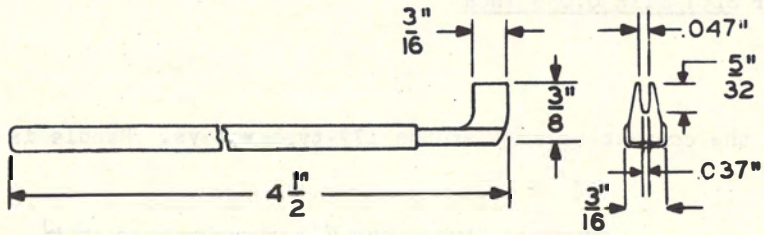

SLOT SIZE 0.050 INCH

331 Tool

Used in adjusting the clearance between the separator on the trip and ring contact springs and the sleeve contact springs of multiple brushes.

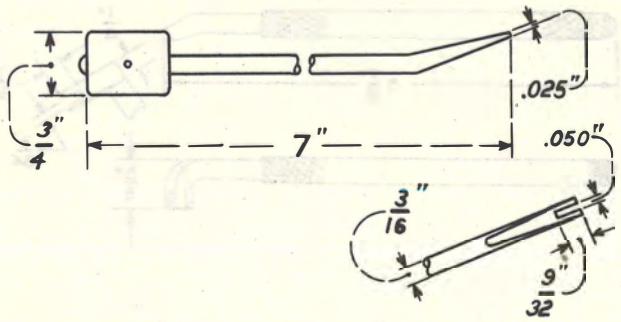

SLOT SIZE 0.057 INCH

143 Tool

See 143 Tool under SLOT SIZE 0.038 INCH

371 Tool

Used in adjusting the contact springs of the 177-type relays. Handle is insulated.

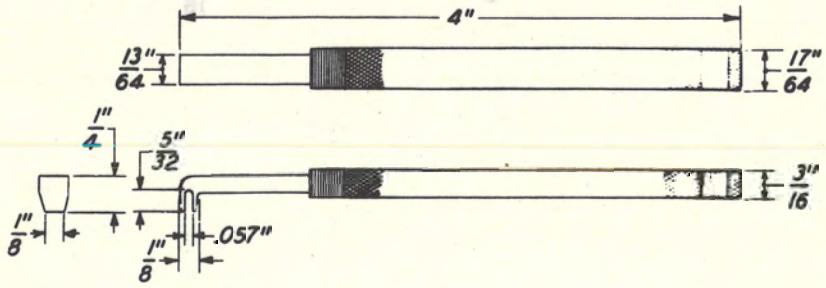

SLOT SIZE 0.057 INCH

466A Tool

See 466A Tool under SLOT SIZE 0.030 INCH.

SLOT SIZE 1/16 INCH

138 Tool

Used in adjusting stops and lugs of coin collectors. Also for use with 5-type traffic registers and power-driven rotary selectors.

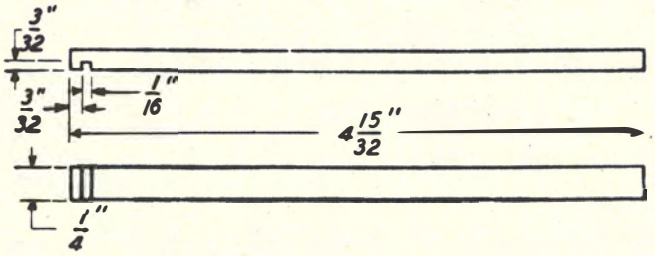

X-75515

537A Tool

Used in removing and replacing strap wires of vertical units on crossbar switches. Also for use on multicontact relays. Center portion covered with insulating material to serve as a handle. Slot at end measures 0.062 inch.

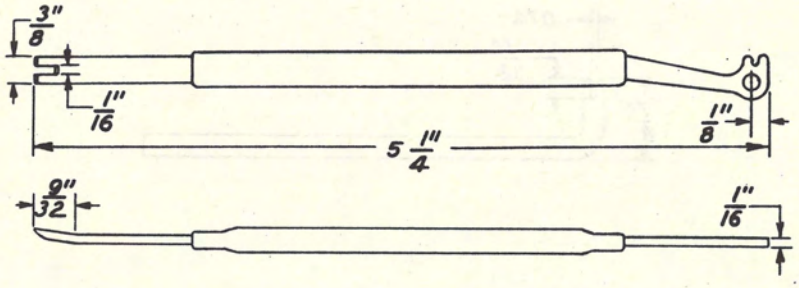

SLOT SIZE 0.068 INCH

532B Tool

Used in adjusting selecting finger supports on selecting bars on crossbar switches. Also for use on multicontact relays.

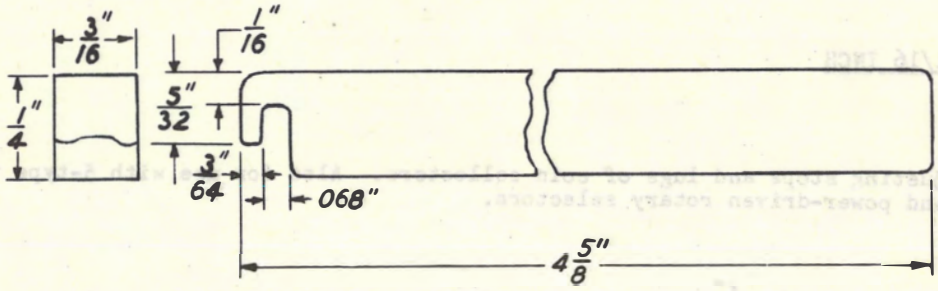

SLOT SIZE 0.074 INCH

332 Tool

Used in adjusting the retractile spring lug on the plate of horizontal trip rods.

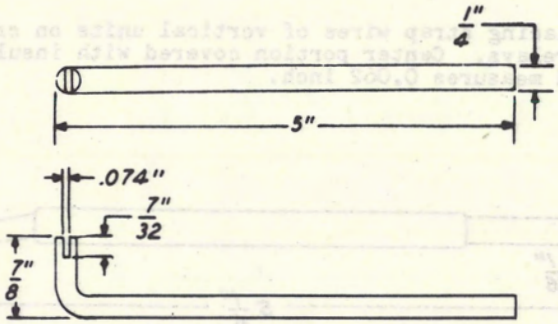

SLOT SIZE 0.074 INCH

623A Tool

Used in adjusting off-normal springs of crossbar switches. Consists of a square metal bar bent at right angles and slotted at each end.

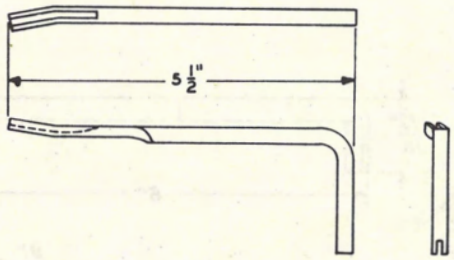

SLOT SIZE 0.075 INCH

179 Tool

See 179 Tool under SLOT SIZE 0.025 INCH.

X-75515

R-2425 Adjuster

See R-2425 Adjuster under SLOT SIZE 0.025 INCH.

SLOT SIZE 0.077 INCH

371B Tool

Used in adjusting the retractile springs of KS-13835 readers in AMA systems. Handle is insulated. See 371 Tool under SLOT SIZE 0.057 INCH.

SLOT SIZE 0.078 INCH

325B Tool

Used to adjust the trip lever of clutches while it is being held with the 326B tool. Also for use on panel elevator apparatus, 206-type selectors, and panel multiple bank guide combs.

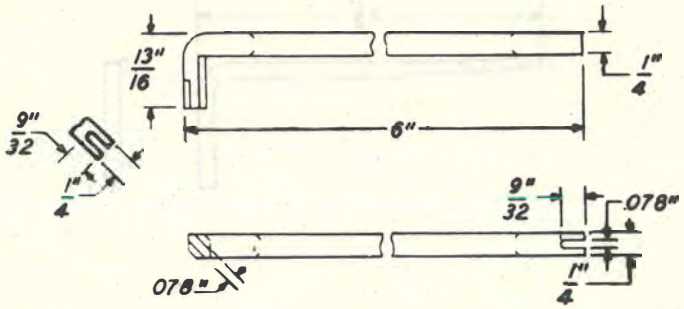

326B Tool

Used to hold the trip lever of clutches while it is being adjusted with the 325B tool. Also for use on 50A drives, panel elevator apparatus, and L-, N-, and S-type relays.

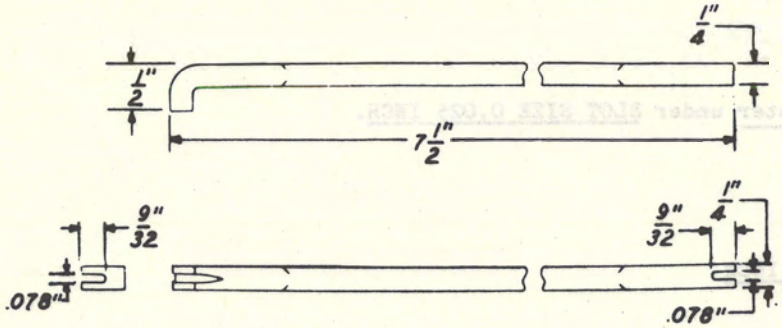

SLOT SIZE 0.080 INCH

379A Tool

Used in adjusting the motor spring lug and the interrupter lug on 206-type selectors in panel-type systems.

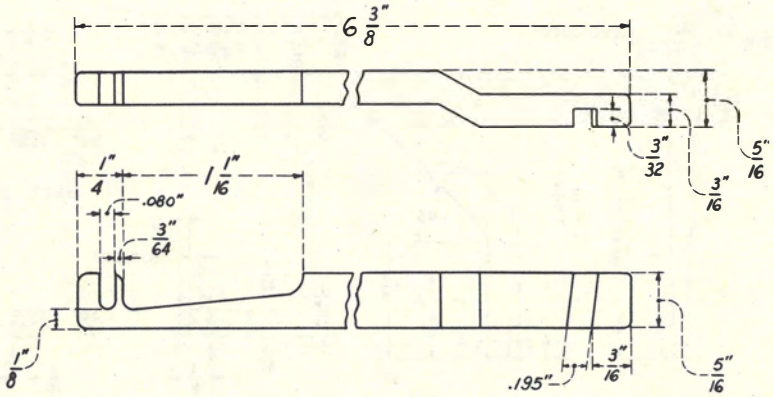

SLOT SIZE 0.083 INCH

X-75515

483A Tool

Used for adjusting the crook springs of universal-type keys. Slot at end measures 0.083 inch.

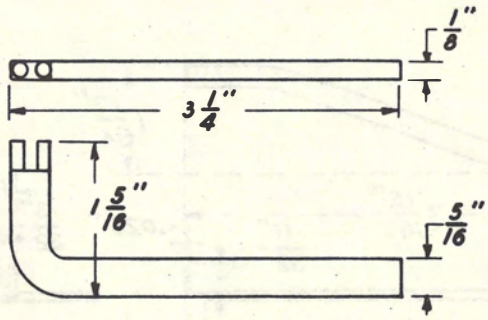

SLOT SIZE 0.090 INCH

R-1760 Adjuster

Used for adjusting binding frames and distorted armatures on 206-, 209-, and 214 selectors and 4A apparatus units.

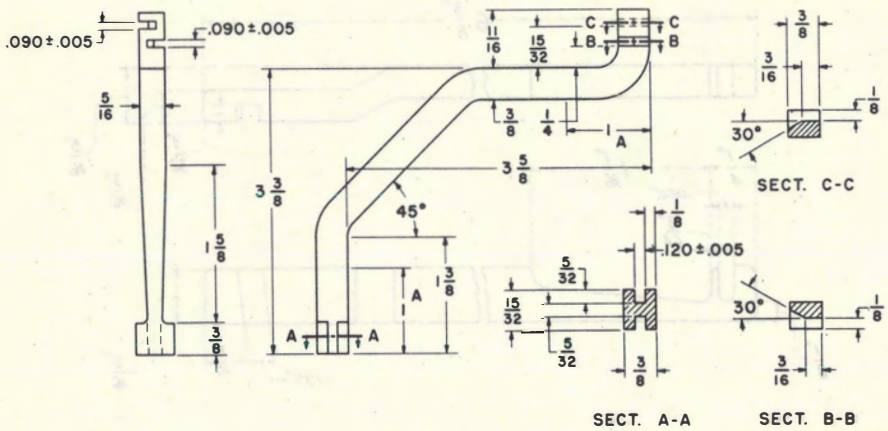

SLOT SIZE 3/32 INCH

350 Tool

Used for adjusting front contact spring of gravity-type relays.

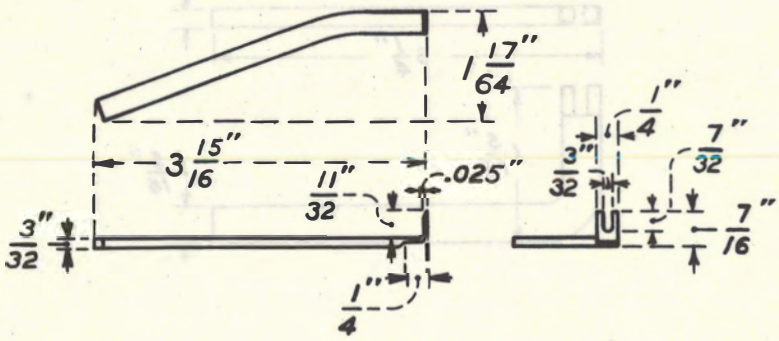

SLOT SIZE 0.094 INCH

589A Tool

Used in panel dial systems to adjust the armature backstop of clutches having helical springs when equipped with release springs.

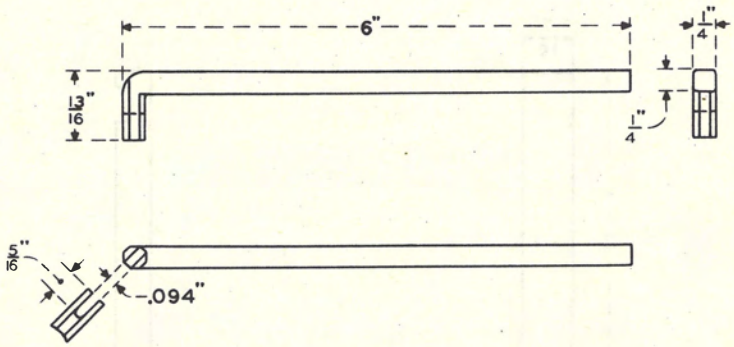

SLOT SIZE 0.102 INCH

X-75515

623A Tool

See 623A Tool under SLOT SIZE 0.074 INCH.

SLOT SIZE 0.110 INCH

355 Tool

Used in the adjustment of the latch plate stops on E1- and E2-type keys.

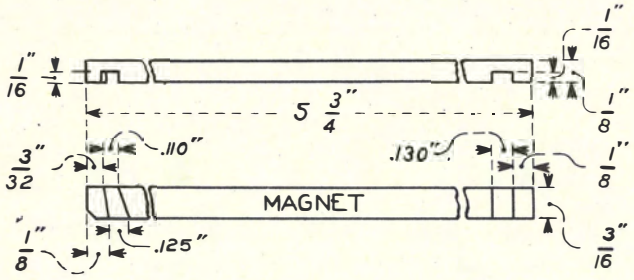

SLOT SIZE 0.120 INCH

533A Tool

Used in adjusting the selecting bar bearing lugs on crossbar switches. Slots at ends measure 0.120 and 0.310 inch.

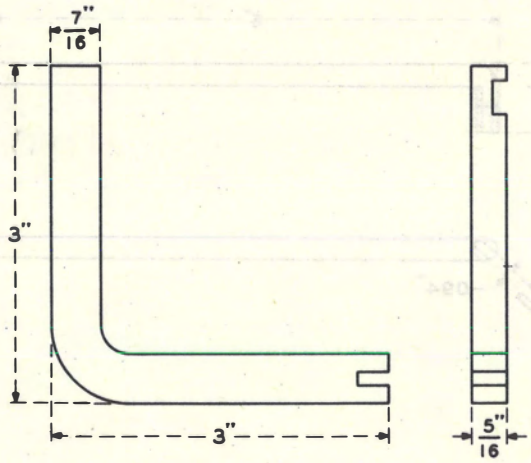

R-1760 Adjuster

See R-1760 Adjuster under SLOT SIZE 0.090 INCH.

SLOT SIZE 0.125 $^{+0.003}_{-0.001}$ INCH

597A Tool

Used in adjusting lever arms on the armatures of step-by-step relays.

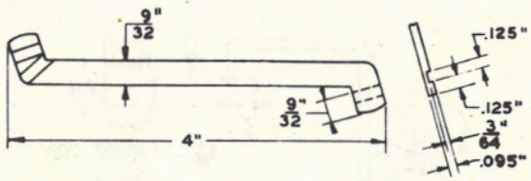

SLOT SIZE 0.130 INCH

355 Tool

See 355 Tool under SLOT SIZE 0.110 INCH.

X-75515

SLOT SIZE 0.135 INCH

606A Tool

See 606A Tool under SLOT SIZE 0.016 ± 0.002 INCH.

SLOT SIZE 0.184 INCH

273 Tool

Used in adjusting pawl trip levers and armature stop lugs of clutches. Also for use on 197- and 198- type switches and panel-type multiple banks.

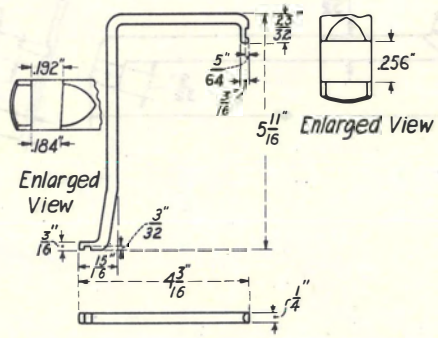

SLOT SIZE 0.189 INCH

R-6180 Bender

Used for adjusting clips of power knife switches.

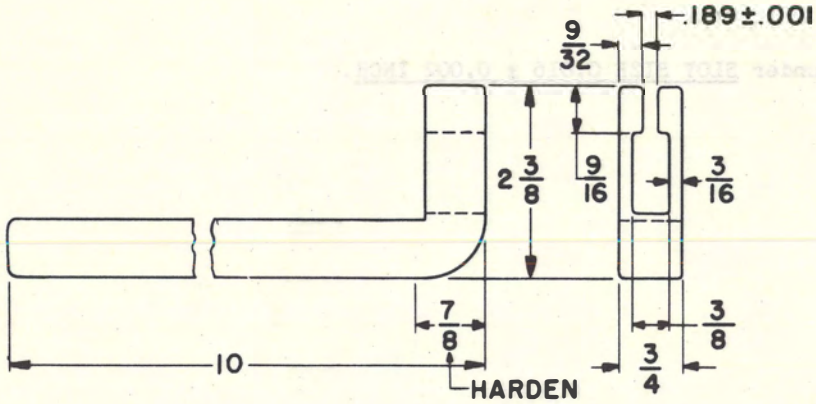

SLOT SIZE 0.195 INCH

379A Tool

See 379A Tool under SLOT SIZE 0.080 INCH.

SLOT SIZE 0.209 INCH

545A and 546A Tool

Used in adjusting the upper and lower lugs, respectively, of the armature backstops on multicontact relays. Insulating coating near each end. Slots at ends measure 0.209 and 0.210 inch in each tool.

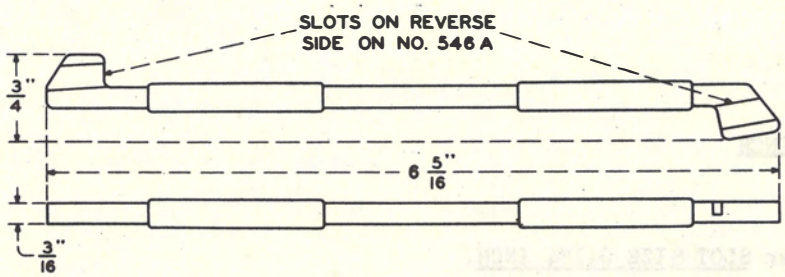

X-75515

SLOT SIZE 0.210 INCH

545A and 546A Tools

See 545A and 546A Tools under SLOT SIZE 0.209 INCH.

SLOT SIZE 15/32 INCH

R-1973 Adjuster

Used in adjusting vertical trip rod bearings.

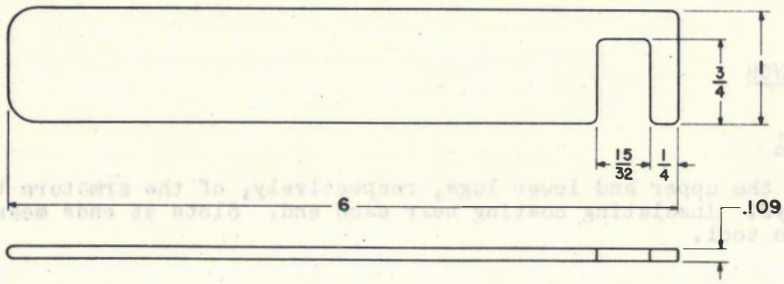

SLOT SIZE 0.256 INCH

273 Tool

See 273 Tool under SLOT SIZE 0.184 INCH.

SLOT SIZE 0.310 INCH

533A Tool

See 533A Tool under SLOT SIZE 0.120 INCH.

SLOT SIZE 0.354 INCH

536B Tool

Used for holding selecting bars when adjusting selecting finger supports of crossbar switches.

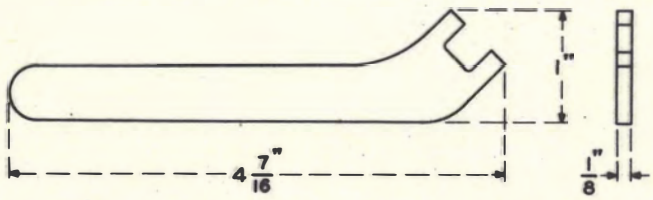

MISCELLANEOUS

39 Tool

Used in adjusting shutter supports on drops.

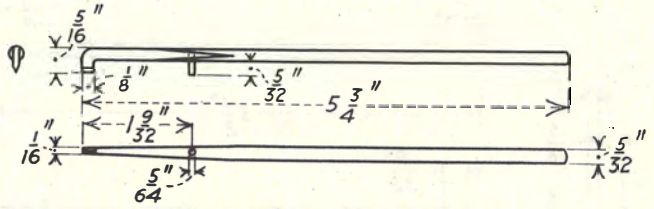

117 Tool

Used in connection with the 118 tool for adjusting abnormally bent ring springs of the 92 jack. Also used in adjusting tip and ring springs of the 49 jack. It has an offset end to reach the end of the tip spring without interfering with ring spring.

X-75515

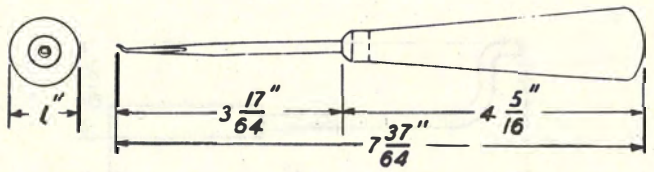

118 Tool

Used in connection with the 117 tool for adjusting abnormally bent ring springs of the 92 jack.

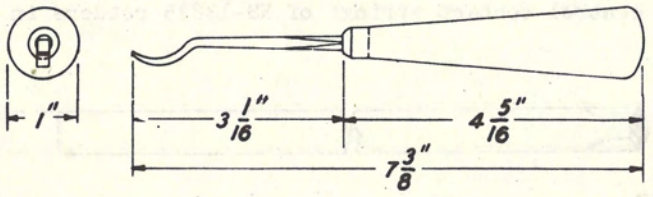

MISCELLANEOUS

329 Tool

Used to hold the 1B guide while it is being adjusted with the 328 tool.

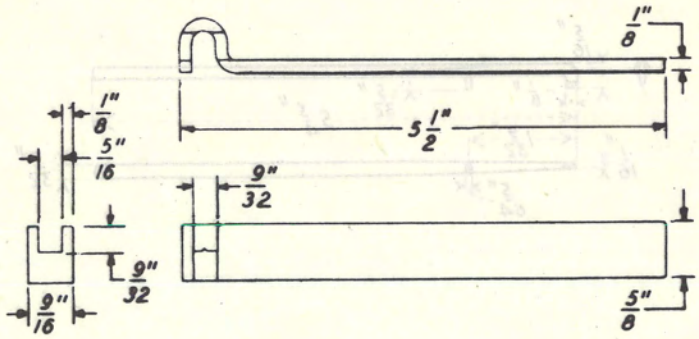

340 Tool

Used in adjusting the armature and contact airgaps on polarized-type relays.

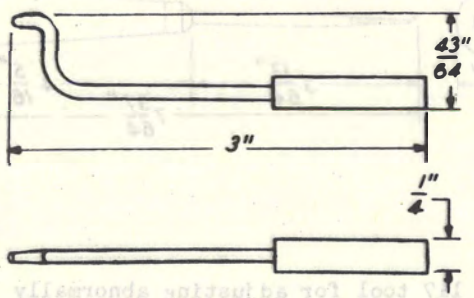

640A Tool

Used in spreading the control contact springs of KS-13835 readers in AMA systems.

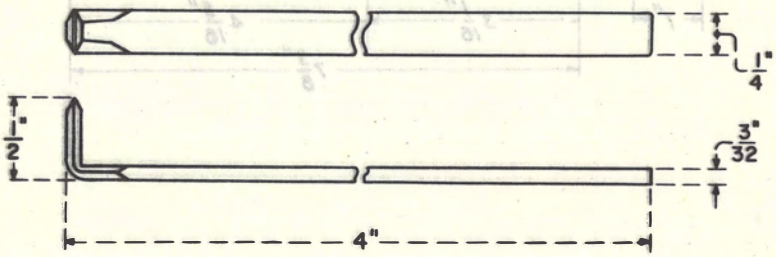

MISCELLANEOUS

645A Tool

Consists of an insulated length of wire having one end half round and bent to form a right angle with the shank. Used in conjunction with the 79C gauge for adjusting tape guide spring pressure of KS-13882 perforators in AMA systems.

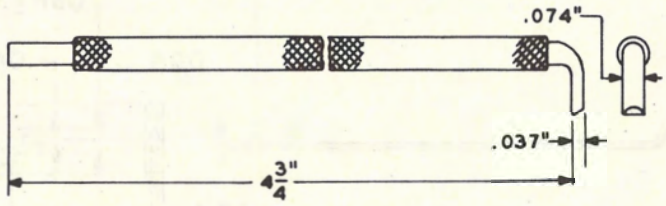

D-159676 Finger Trip Spring Adjuster

Used in adjustingthe coil springs of trip finger assemblies in panel systems so as to increase their tension, thereby avoiding sluggish operation which might result in snagging of the multiple brushes. Six needles are furnished with each assembly.

X-75515

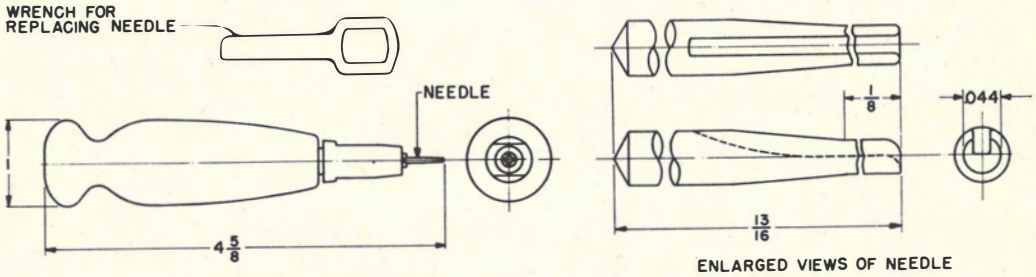

R-2142 Adjuster

Used for equalizing the tension of the prongs of split sequence switch springs. Handle is covered with plain sleeving.

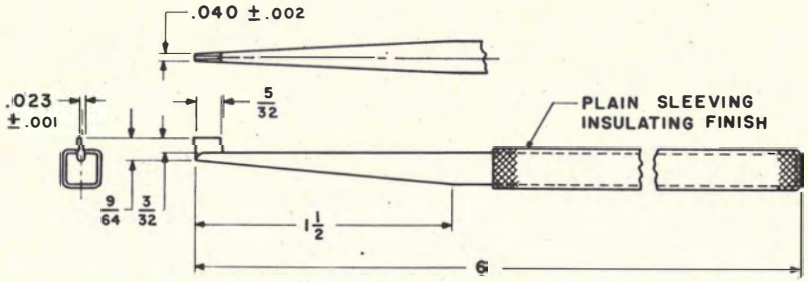

MISCELLANEOUS

R-2250 Bender

Used for straightening bent multiple bank terminals.

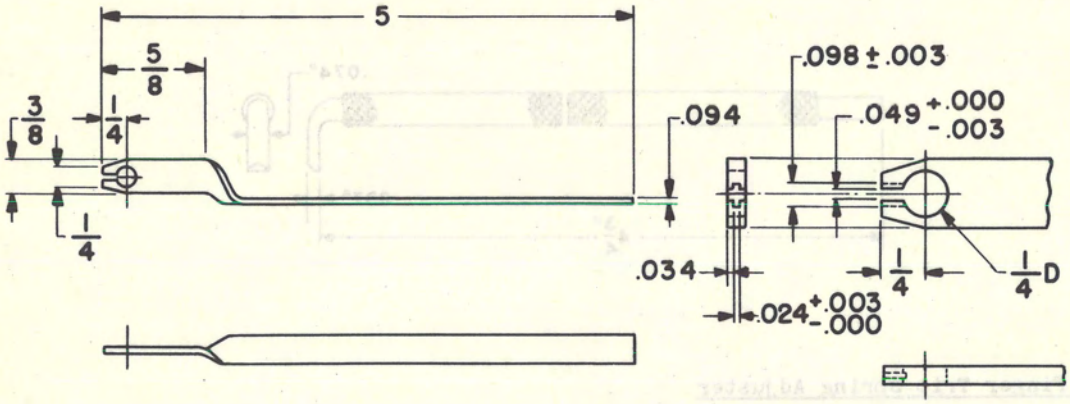

HORSEHAIR BRUSHES

351 Tool

A horsehair brush used in cleaning protector blocks and designed to mount on the end of the No. 3A carrying case. It is mounted by means of a screw that is provided.

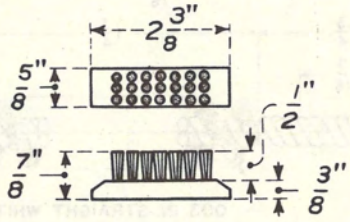

KS-2993 Flat Brush

A soft horsehair brush used for cleaning interrupter drums.

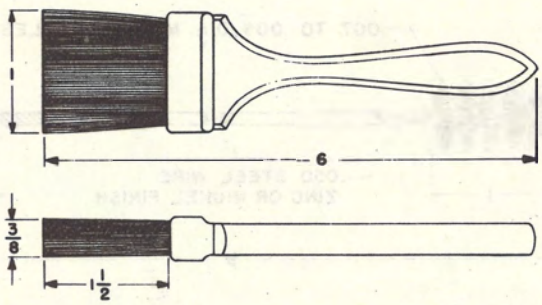

X-75515

KS-3093 Brush

A medium soft horsehair brush having a twisted wire handle. It is used with the KS-2629 vacuum cleaner attachment in cleaning interrupters. It is also used for general cleaning purposes in conjunction with cleaning agents.

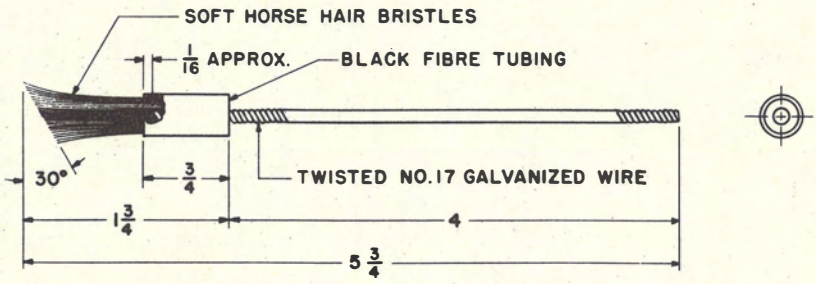

NYLON BRUSHES

KS-13604 Brush

A stiff nylon brush used in cleaning sequence switches and panel multiple banks.

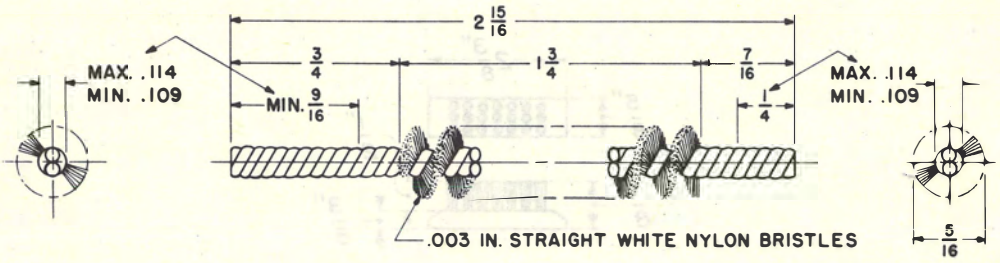

KS-13786 Brush

A stiff nylon brush used in the field maintenance of coin collectors for removing dust, dirt, and other foreign matter from the interior mechanisms.

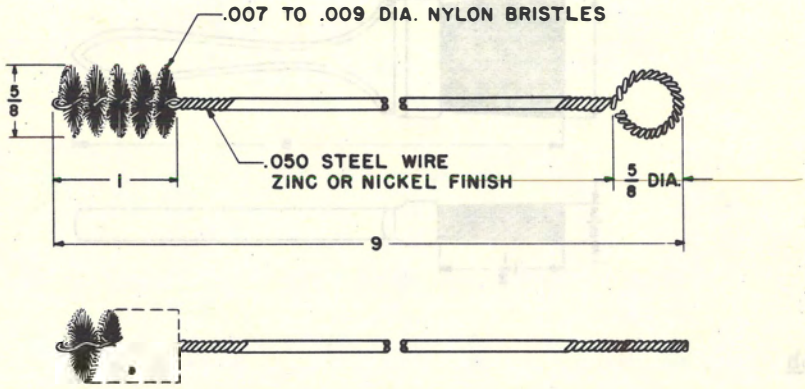

PIG BRISTLE BRUSHES

389A Tool

A pig bristle brush used in brushing dirt and other accumulations from the terminal levels of selector and connector banks in step-by-step dial telephone systems.

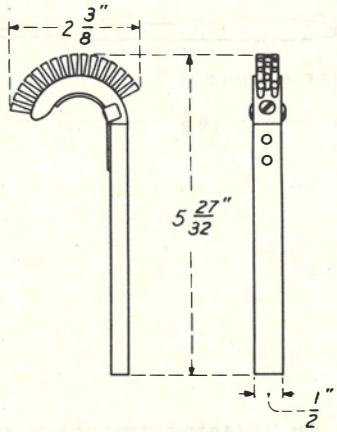

SABLE BRUSHES

KS-14162 Brush
KS-14164 Brush

X-75515

Red sable brushes used in central offices for applying small amounts of paint, lubricants, and cleaning fluids.

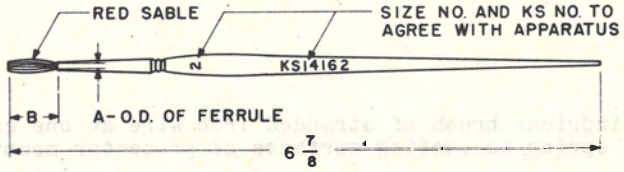

Brush	Size No.	A	B
KS-14162	2	1/16	17/32+1/32
KS-14164	4	3/32	11/16+1/32

SABLE BRUSHES

KS-14208 Brush

A red sable brush used in central offices for cleaning relay contacts. This is a pointed water-color brush.

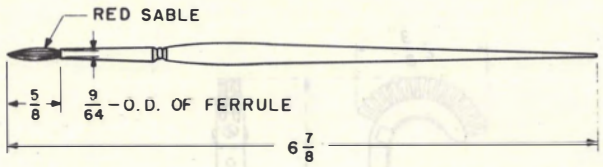

WIRE BRUSHES

133 Tool

A wire brush in a brass holder used in cleaning protector springs.

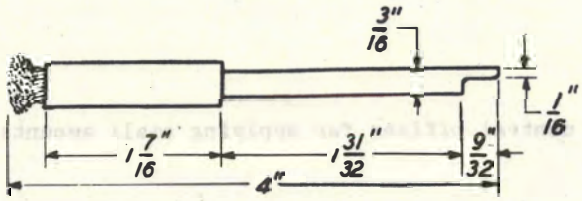

KS-6916 Wire Brush

A mandrel having a cylindrical brush of stranded iron wire at one end. It is used in cleaning the heat coil spring contacting surfaces of protector mountings used in telephone systems.

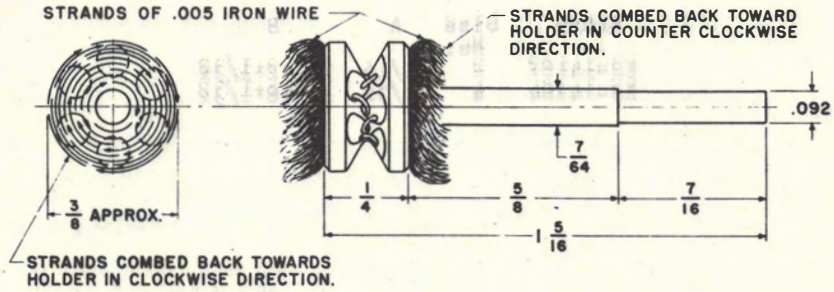

BURNISHERS

1A Burnisher

Used in cleaning contact points of telegraph keys, relays, etc. Consists of a spring steel blade set in an insulating handle. The blade is coarsely ground across the flats giving the effect of a fine file.

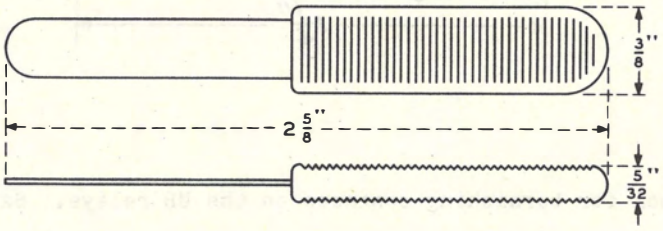

265C Tool

Consists of a chuck for holding either a 266B or 266C tool. It has a hard-rubber handle and a magazine containing six 266B tools and six 266C tools. Used in cleaning the surface of relay contact and pits on relay contacts.

X-75515

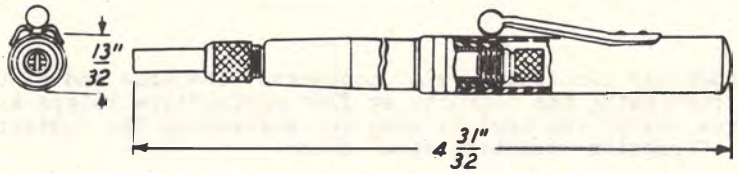

BURNISHERS

266C Tool

Used in cleaning pits on relay contacts. Sand-blasted steel music wire.

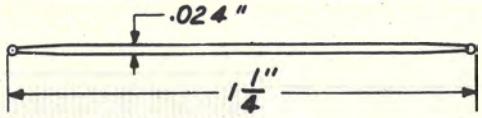

266D Tool

Used with the 265C tool for burnishing contacts on the UB relays. Sand-blasted sheet steel blade.

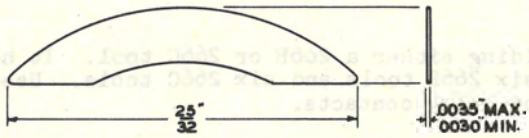

266E Tool

Used with the 265C tool for burnishing relay contacts. The wide end of the tool is intended for use in burnishing the contacts on flat spring-type relays except UB-type relays, and the narrow end of the tool is used for burnishing the contacts on wire spring-type relays. Corrosion-resisting steel blade.

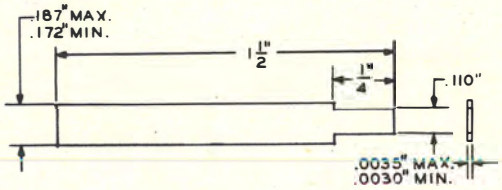

BURNISHERS

373D Tool

Used in holding and storing 374-type tools, a wire-core bristle brush for cleaning sequence switches and crossbar select fingers used for replacement purposes. Consists of a tube of insulating material equipped with a chuck at one end for holding the tools when in use and equipped with a plug at the other end. Used in burnishing contacts, cleaning sequence switch cams, and replacing selecting fingers on crossbar switches.

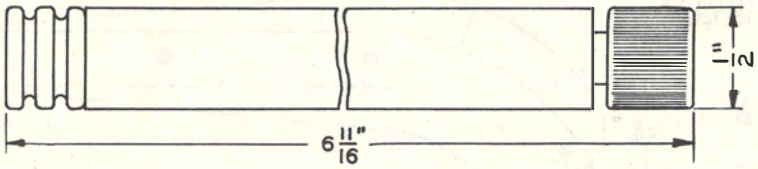

374A, 374B and 374C Tools

Metal blades used with the 373-type tools in cleaning contact points.

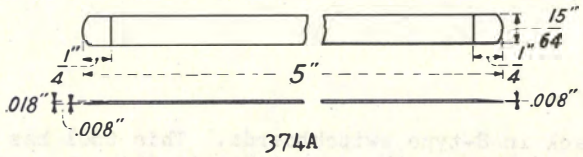

374A

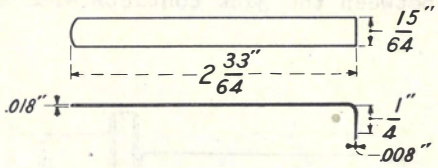

374B

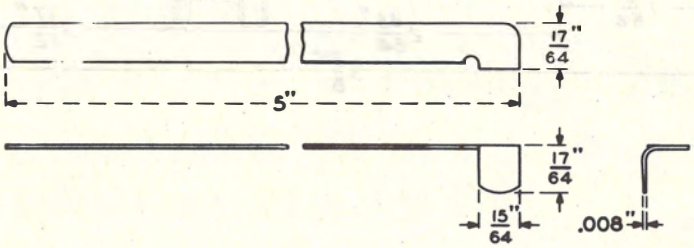

374C

X-75515

BURNISHERS

D-156695 Bank Contact Separator

Used in step-by-step dial telephone systems for applying pressure to an abrasive tool when cleaning bank spring contacts of plunger-type line finder switches.

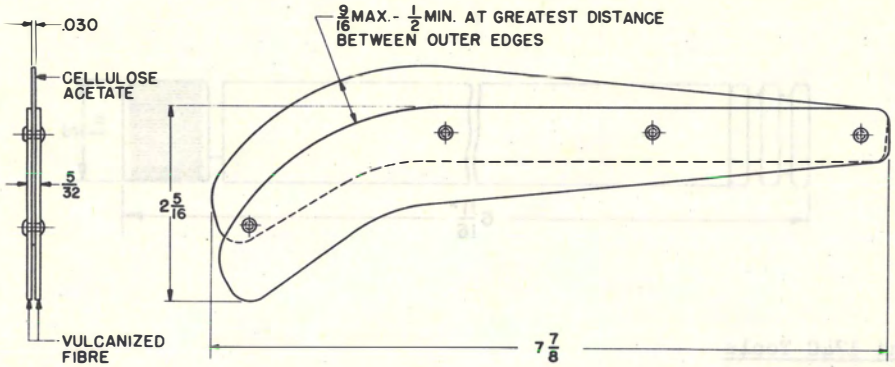

CLEANERS

111 Tool

Used with the 122-type jack in 8-type switchboards. This tool has a roughened steel ribbon which can be inserted between the jack contacts without crossing the springs of sleeve.

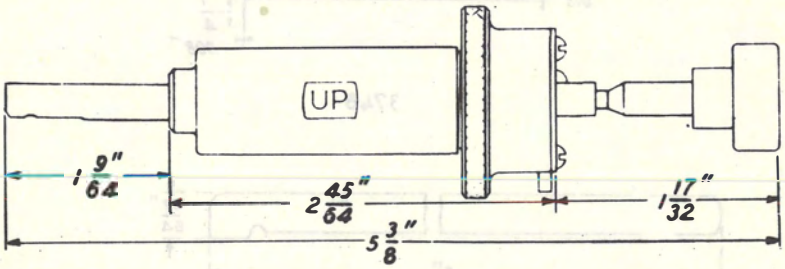

CLEANERS

239 Tool

Used in conjunction with a piece of chamois skin for cleaning the cams of A- and B-type and spring-driven sequence switches. Also for use on 155A interrupters.

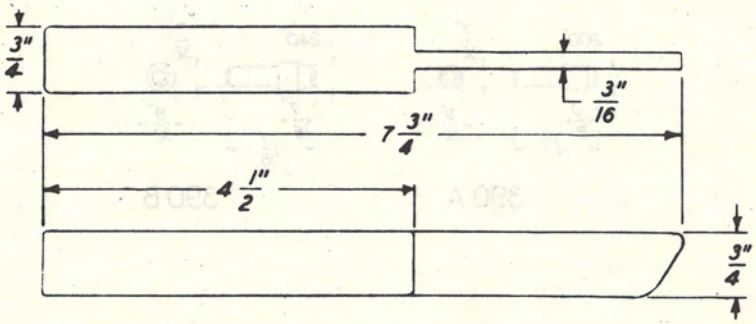

358 Tool

Used with a cleaning cloth to clean the cork roll surfaces, oil grooves, and oil closure surfaces of friction roll and gear reduction drives. Also for use on vertical drive shafts.

X-75515

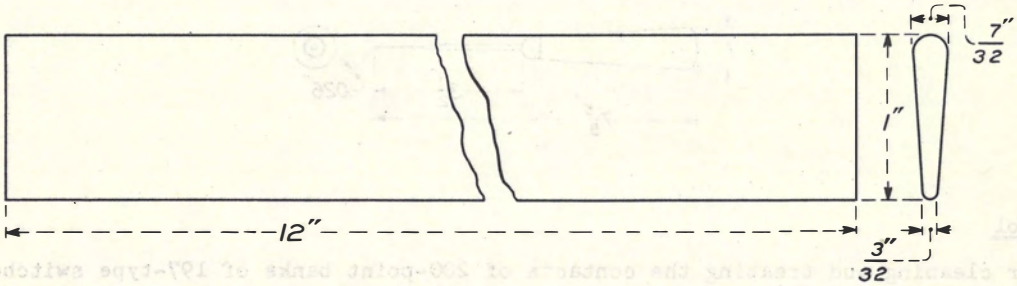

359 Tool

Used in cleaning the magnet core face and adjacent armature surface of 204- and 206-type selectors. Also for use on 2-type buzzers and 25-point rotary switches.

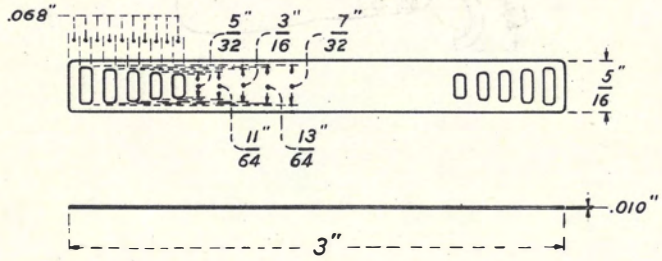

CLEANERS

390A and 390B Tools

These are wooden pins intended for use in conjunction with the 323 tool for cleaning the flared portion of jack sleeves. 390A is used with 92 and 292 jacks; 390B is used with the 49-type jack.

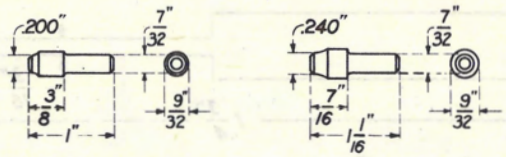

390 A 390 B

394A Tool

Used in cleaning the contacts of the 141- or similar-type jacks.

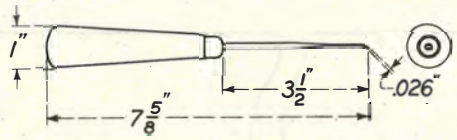

402E Tool

Used for cleaning and treating the contacts of 200-point banks of 197-type switches.

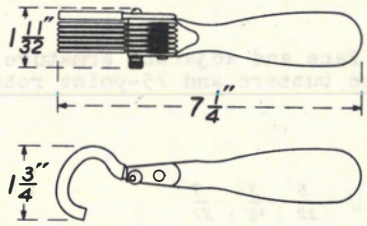

CLEANERS

451A Tool

Used for cleaning contact terminals of plunger-type line switch banks in step-by-step dial systems.

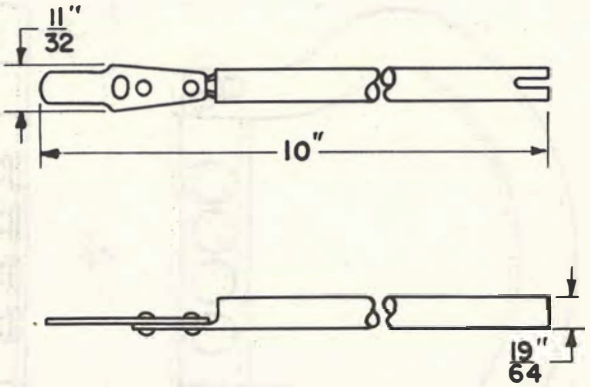

452A Tool

Used for protecting the adjustment of the flexible contact springs when using a 451A tool.

X-75515

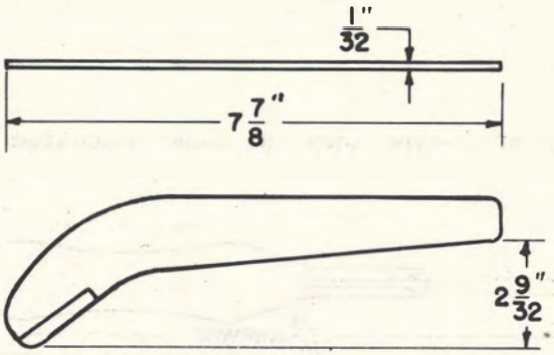

CLEANERS

469A Tool

Used in cleaning rotor hubs of 206-type selectors and 25-point rotary switches.

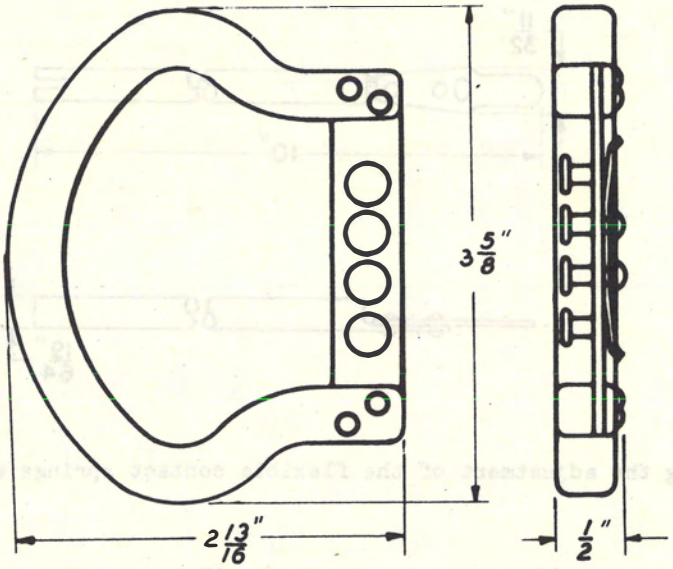

470A Tool

Used in cleaning terminals of 26-type banks and banks associated with 25-point rotary switches.

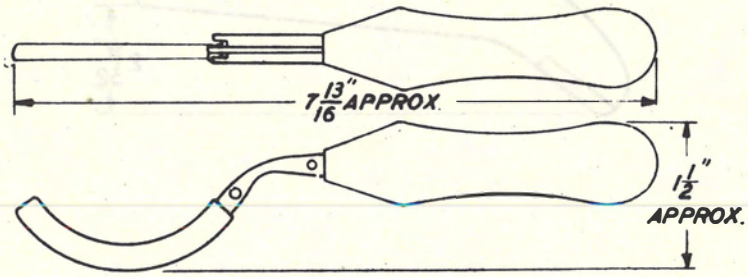

CLEANERS

479A Tool

Used in cleaning the tip, ring, and sleeve terminals of banks in dial systems. Consists of a flat metal arm with a handle of insulating material on one end and two insulating blocks on the other end. Arranged so that a rubber ring may be stretched over the two insulating blocks and a strip of abrasive cloth placed over the rubber ring. Supplied with six rings of each type.

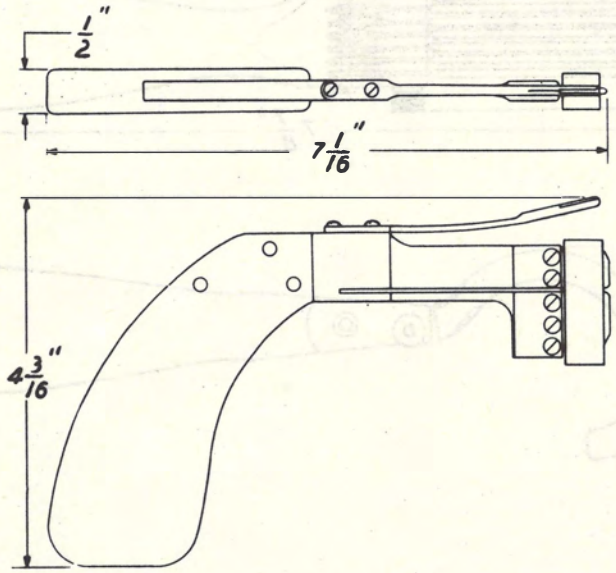

X-75515

511A Tool

Used in holding No. 3, 32, or 33 sleeving for cleaning the feeder brush contact paths on the rotor hubs of 206-type selectors.

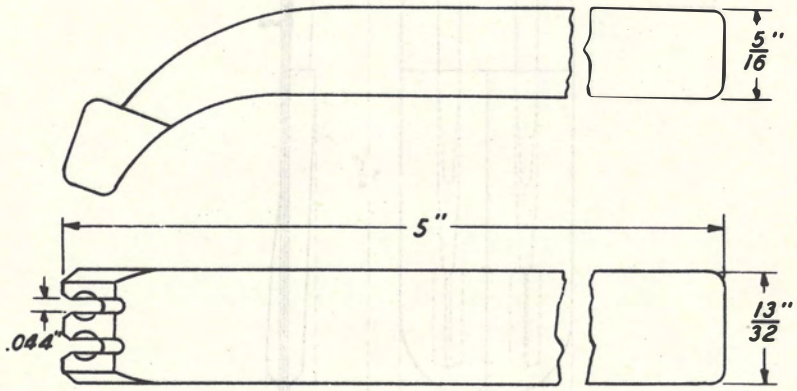

CLEANERS

517A and 517B Tools

Used in cleaning the terminals of 200- and 100-point banks, respectively, in step-by-step dial telephone systems. The 517B is used for cleaning and treating the contacts of 40-point banks of 198-type switches.

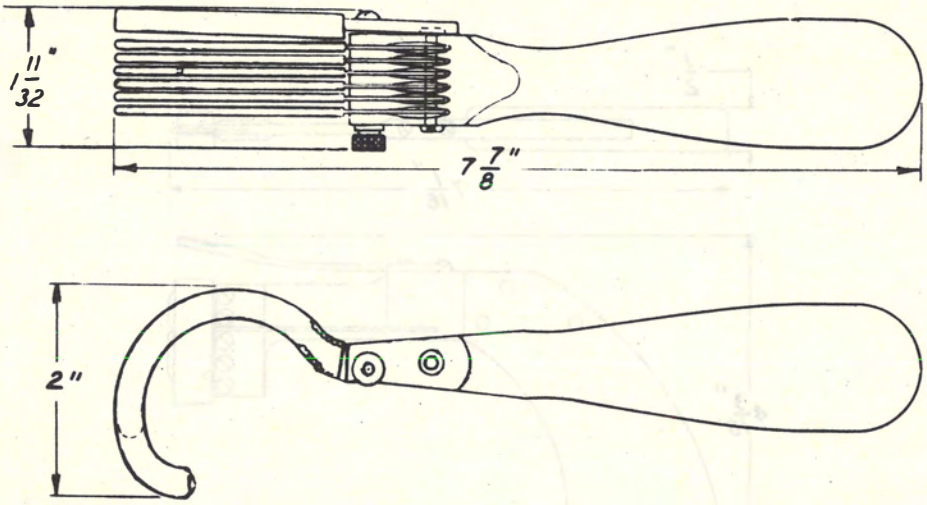

528A Tool

Used for cleaning out the key slots of the locks on coin collectors. Consists of two implements in a leather holder. Each implement consists of a piece of music wire with a metal handle. One wire is thicker than the other. The smaller one is used in the upper portion of the key slot and the other in the lower portion.

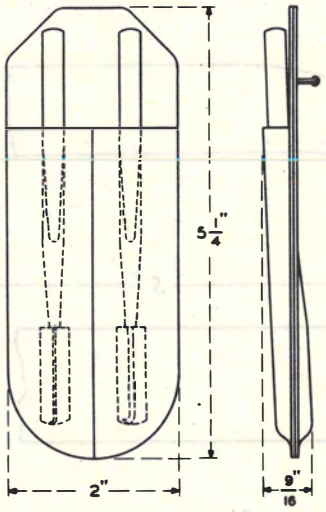

CLEANERS

KS-14469 Small Oiling Cloth

A 3-1/4-inch by 9-inch ivory-colored, oil-impregnated, unhemmed, bias cut, cotton twill cloth used in oiling sequence switch cams having silver contact surfaces.

R-3109 Deburring Block

A 1-1/2-inch by 3-inch by 5-inch wooden block with a 3/8-inch by 3-inch by 5-inch abrasive rubber block cemented to one side. Used in removing the burrs on coded cards used in one-type translators.

KS-14654 Cam Scrubber

Used in cleaning panel-type sequence switch cams. Consists of a tank top assembly which dispenses cleaning fluid under pressure through a hose to a scrubbing pad and a tank bottom assembly in which the used fluid is collected.

X-75515

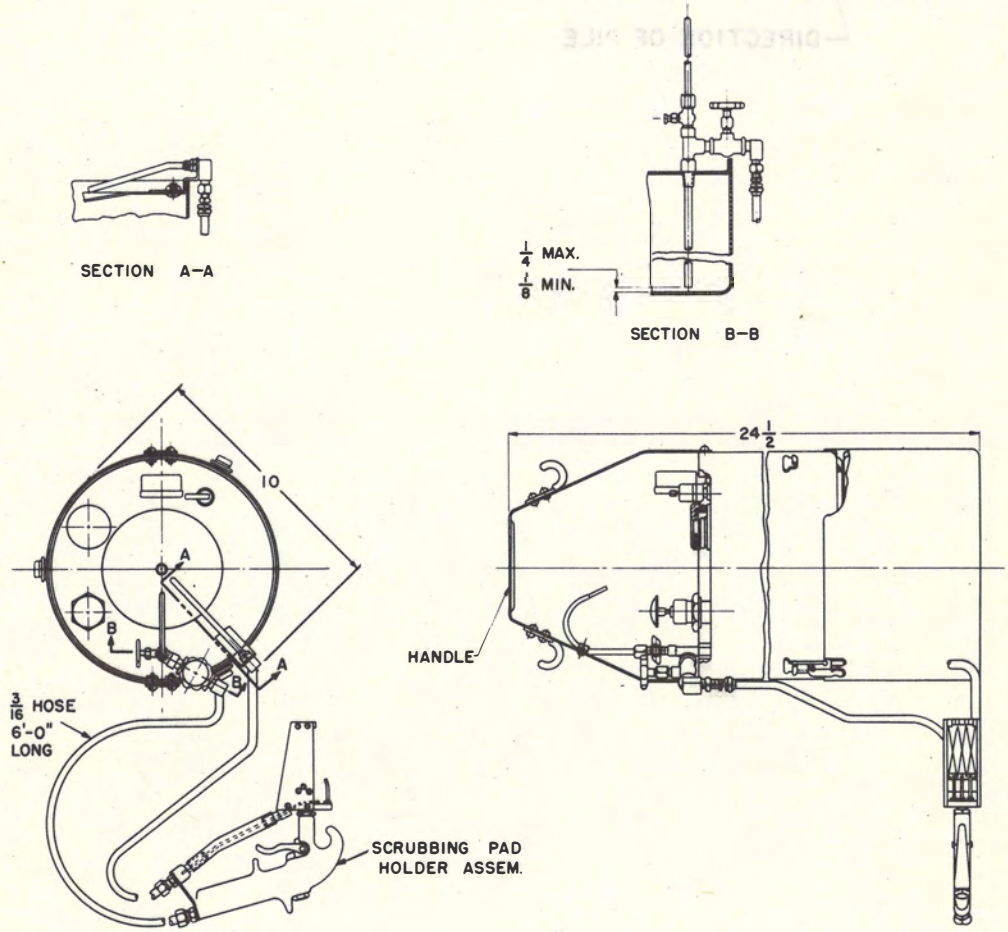

CLEANERS

KS-14694 Scouring Pad

An abrasive capped velvet material with rubber material used in the cleaning and scouring operation of panel-type sequence switch cams.

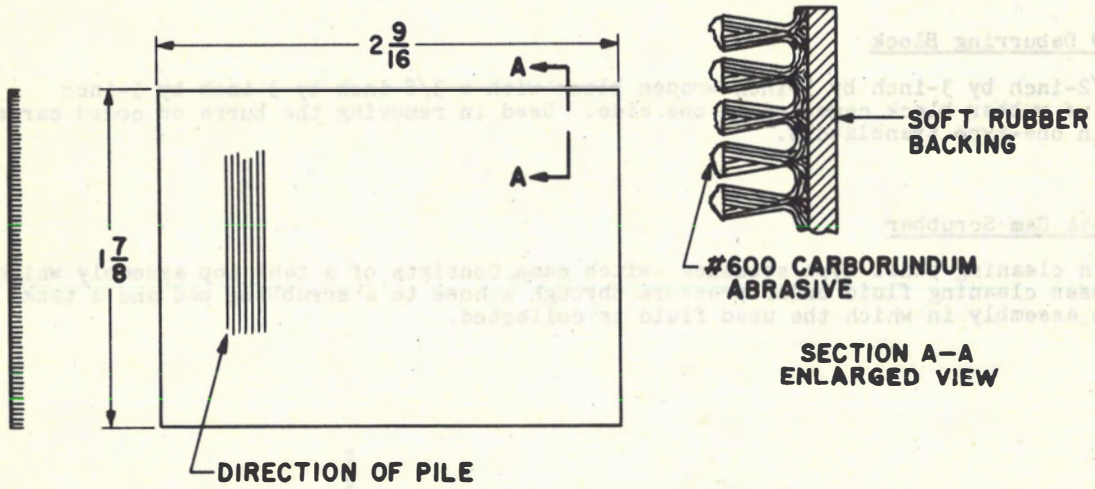

14A Carrying Case

Black-finished metal case with hinged cover and rubber feet. Used for housing the entire equipment required in connection with the application of multiple marking paints to jack mounting strips in central offices.

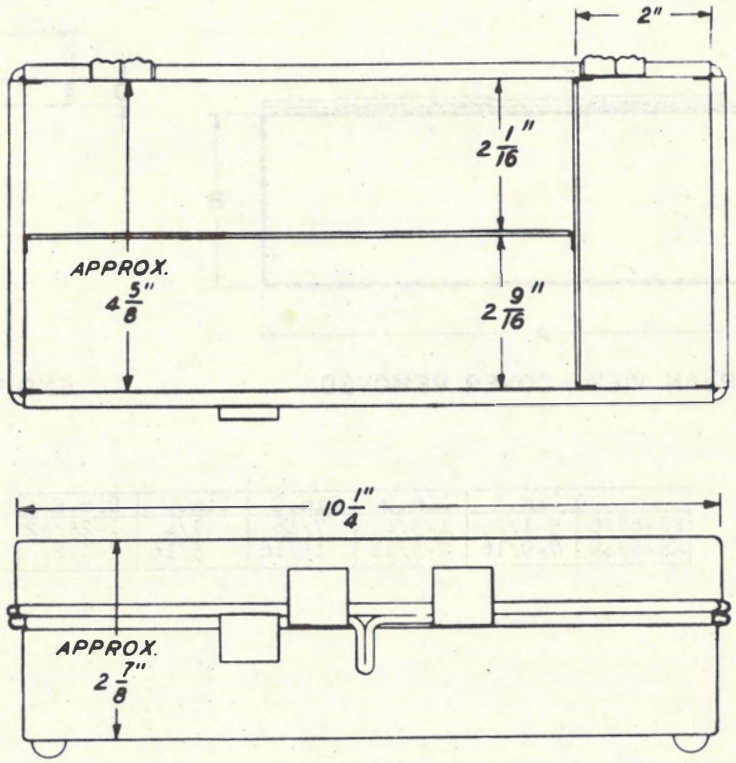

X-75515

KS-6526 and KS-8349 Carrying Cases

KS-6526 is a metal box with a hinged cover used to protect the gauges for relays when they are not being used.
KS-8349 is a metal case with a hinged cover used for the protection of miscellaneous tools and gauges when they are not in use.

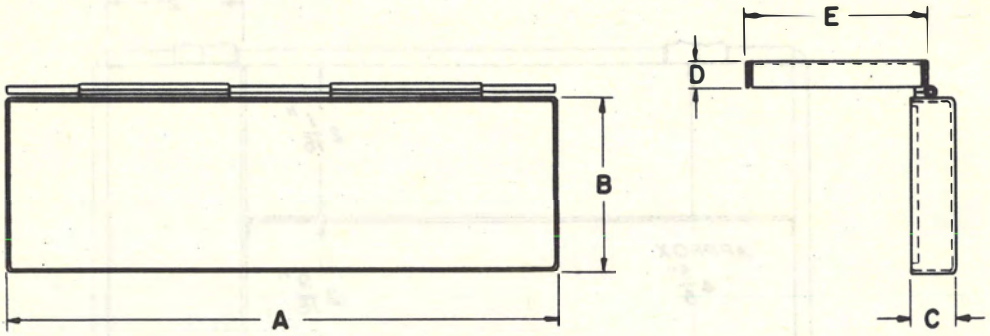

PLAN VIEW - COVER REMOVED END VIEW

	Dim.A	Dim.B	Dim.C	Dim.D	Dim.E
KS-6526	5-1/2	1-3/4	7/16	1/4	1-25/32
KS-8349	7-9/16	2-5/16	15/16	5/16	2-3/8

AT-6795 Station Repairmen's Satchel

This satchel is used for carrying the tools and materials used by station repairmen. It consists of a vulcanized fibre satchel with a hinged cover and a tray. The cover is provided with a suitcase handle and the ends of the satchel are equipped with Dee rings to which a shoulder-carrying strap may be attached. The tray has four compartments for accommodating the smaller items of equipment. Larger items are carried in the lower part of the satchel.

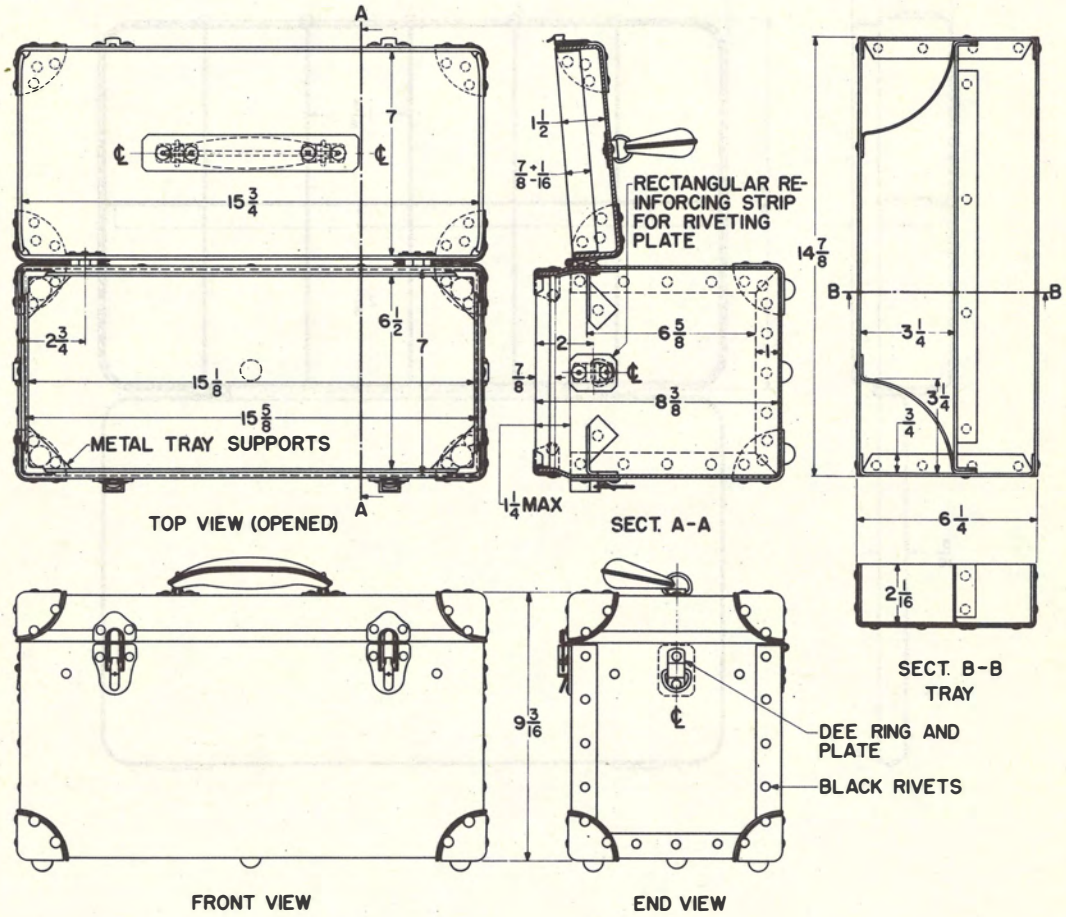

X-75515

AT-6917 Small Parts Box

Used as a container of miscellaneous small parts and materials carried principally by repairmen. The body of the box has twelve compartments formed by steel partitions each of which may be removed and replaced to alter the size and arrangement of the compartments. Transverse partitions are removable.

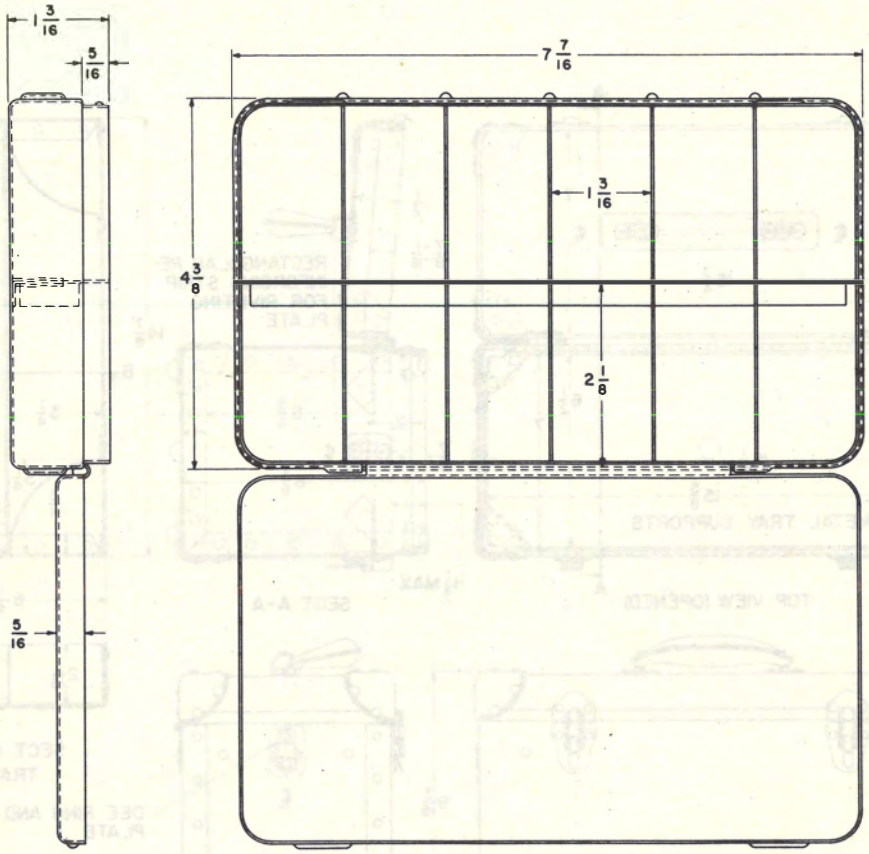

AT-7179 B Repairmen's Case

A vulcanized fibre case for carrying tools used by station and PBX repairmen. One side of the case is provided with a suitcase handle and the ends are equipped with Dee rings to which a shoulder-carrying strap may be attached. The body of the case is partitioned lengthwise into two large compartments.

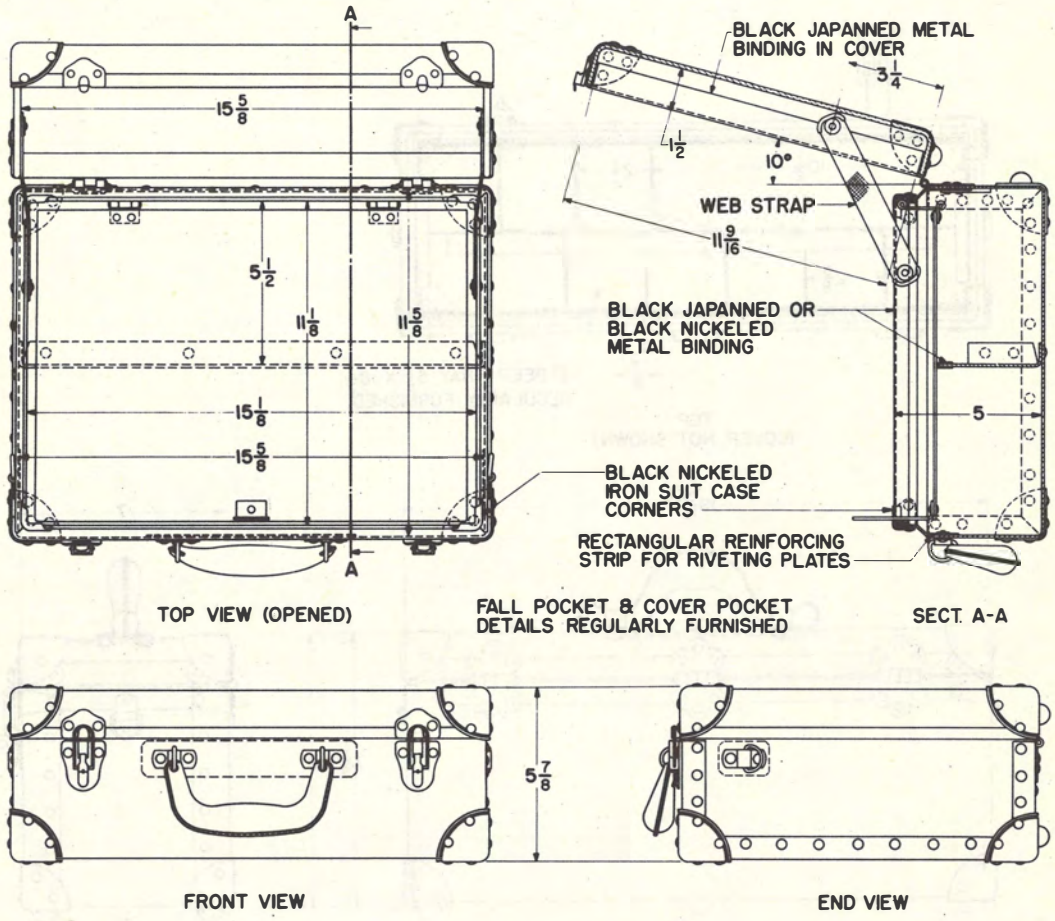

X-75515

AT-7401 B Installer's Case

A vulcanized fibre case which has a hinged cover and a removable tray for carrying tools and materials used by station installers. The case is provided with suitcase handle on the cover and a Dee ring on each end to which a shoulder-carrying strap may be attached. The catches are equipped with locking ears by which the case may be padlocked. The tray has compartments for accommodating the smaller items of equipment. Large items are carried in the lower part of the case.

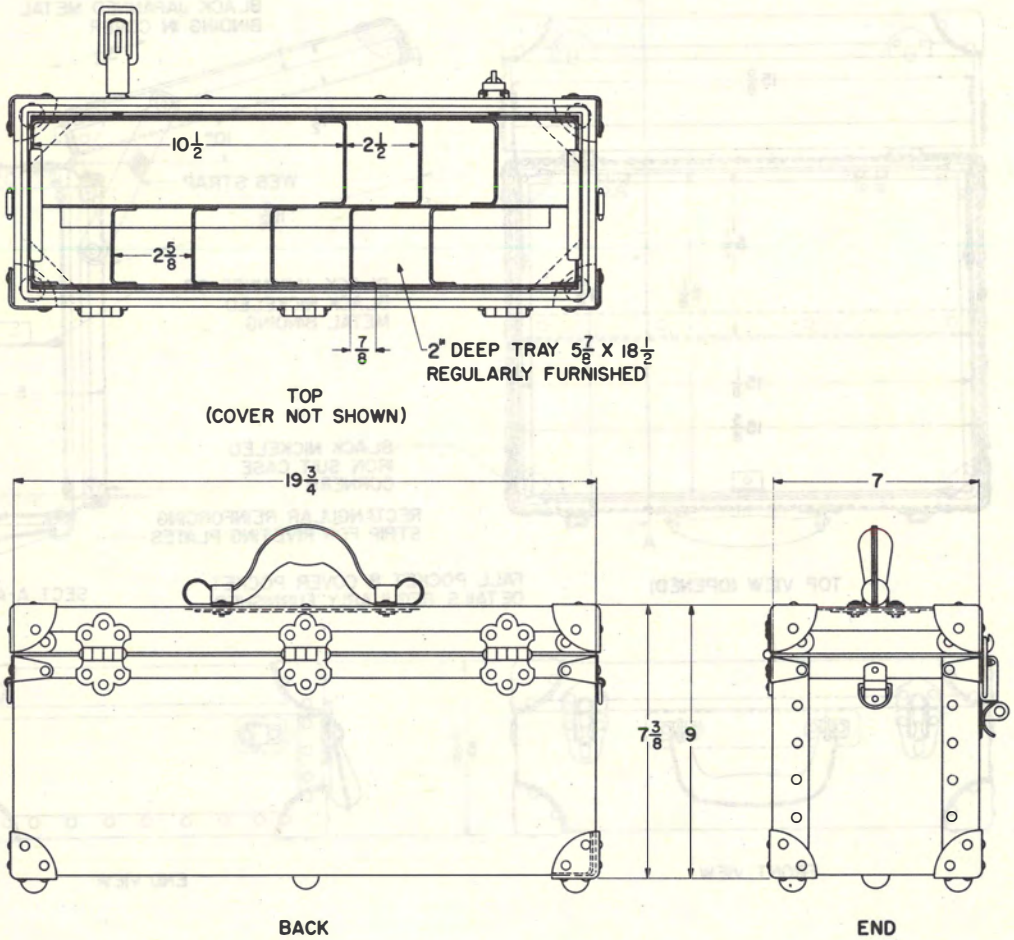

R-2521 Case

A metal box with a hinged cover used as a container for small kits and sets. It contains a protector and a card holder bracket.

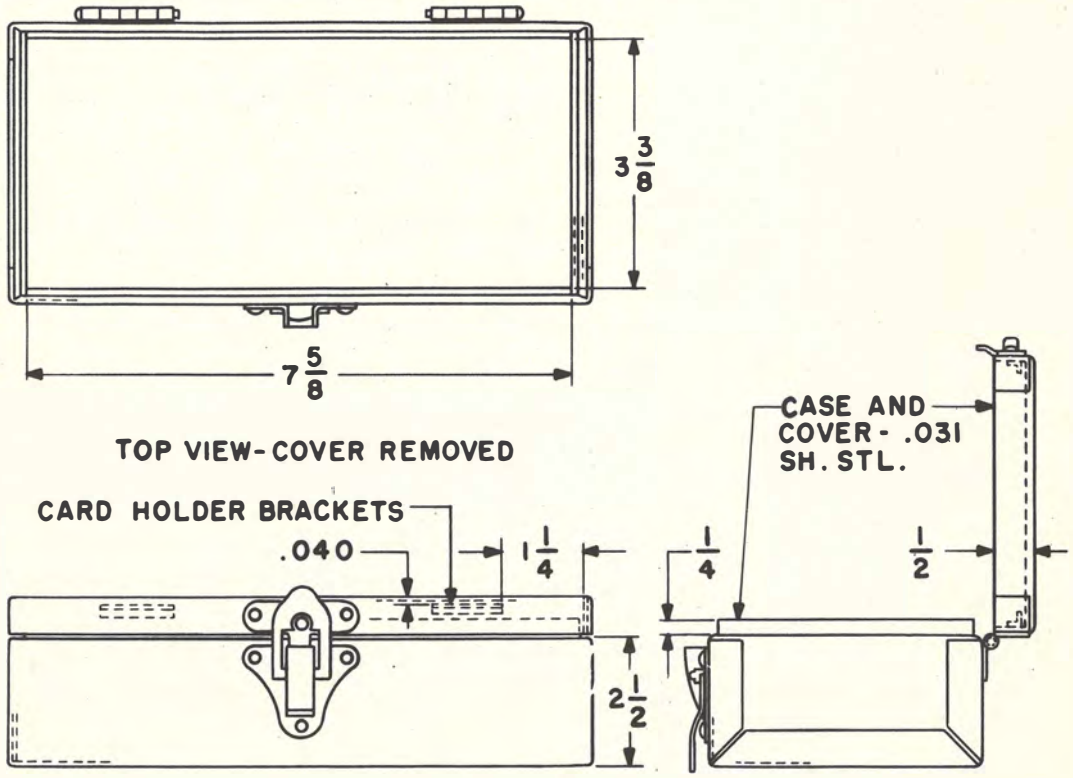

X-75515

85 Tool

An extractor used in removing lamps.

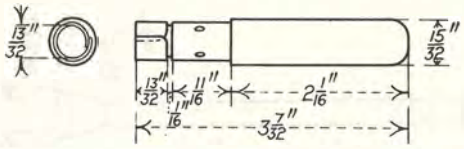

90 Tool

An extractor used in removing caps of message registers.

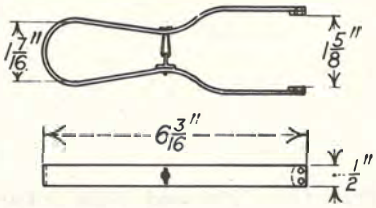

274 Tool

Used in extracting signal plugs from multiple jacks.

X-75515

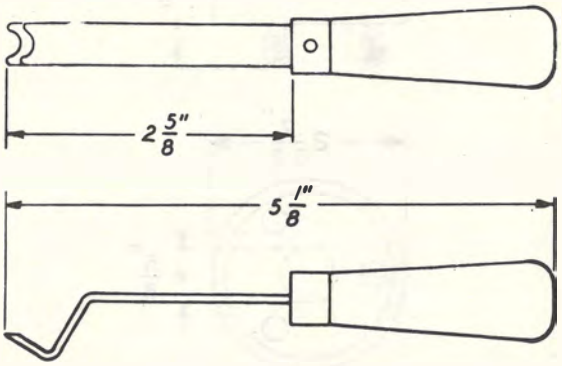

319B Tool

See 319B Tool under PLIERS, EXTRACTING Tools.

348 Tool

Used for extracting worn out bronze bushings used as cam-shaft bearings in the magnet end of sequence switch frames. Also for use on power-driven rotary selectors.

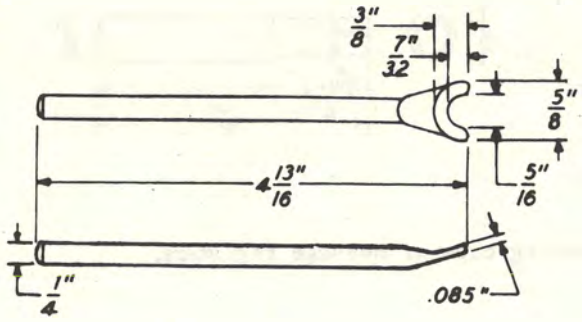

424A Tool

Used in removing the flywheels from the 170A and 171A interrupters.

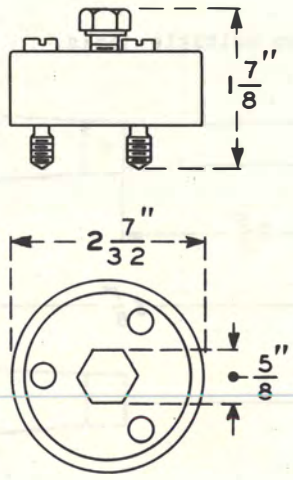

492A Tool

Used in removing and replacing bushings of interrupters in dial systems. This tool forms part of the 1000A tool kit.

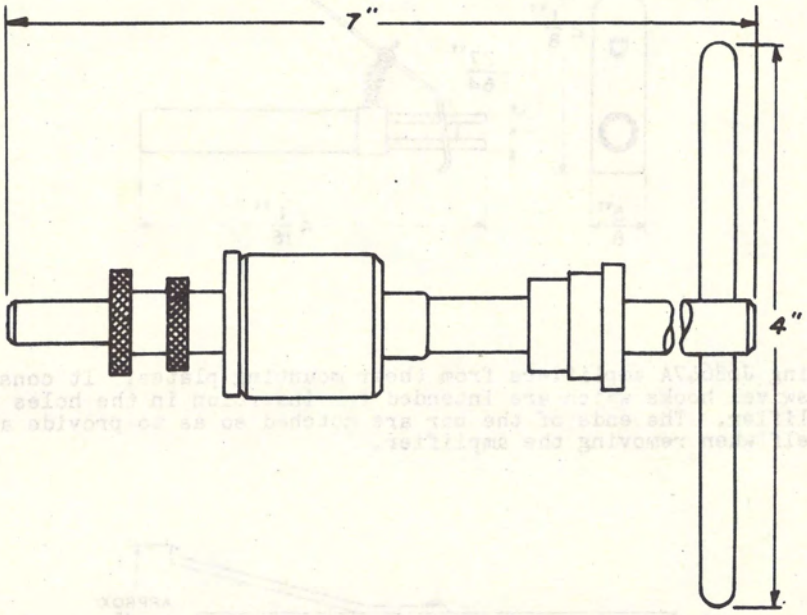

494B Tool

See 494B Tool under PLIERS, PAWL PIN.

553A Tool

Used in removing switchboard lamps.

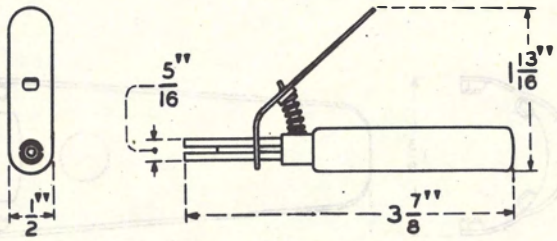

553B Tool

Used in removing 212-type selectors from their sockets.

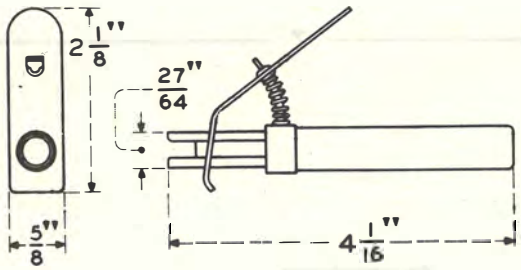

602B Tool

Used in extracting J68647A amplifiers from their mounting plates. It consists of a metal bar having two swivel hooks which are intended for insertion in the holes provided in the lugs of the amplifier. The ends of the bar are notched so as to provide a brace against the repeater shelf when removing the amplifier.

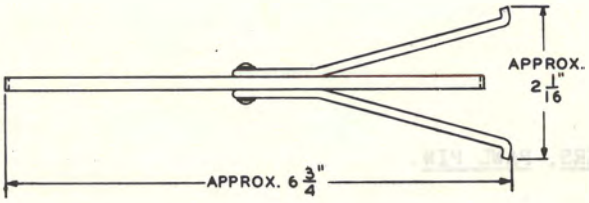

603A Tool

Used as a lever in removing 275- and 276-type relays and apparatus with similar bases from their sockets. There are wedge projections at one end for insertion between the base of the relay and the socket.

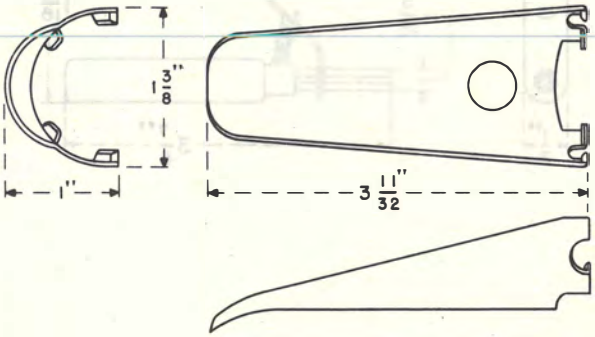

D-160806 Bearing Puller

Used for assembling and removing ball bearings on the armature shaft of the Leeds and Northrup KS-7664 and KS-7781 pilot wire controllers used in the type "K" carrier systems.

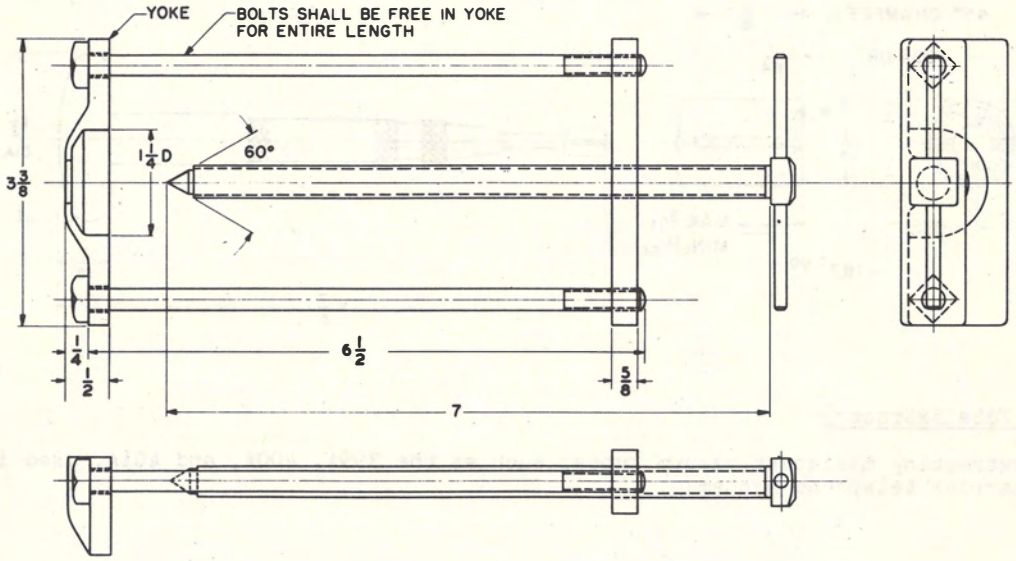

KS-5637 Vacuum Tube Extractor

X-75515

Used in removing 373- and 374-type vacuum tubes from K2 carrier telephone equipment panels.

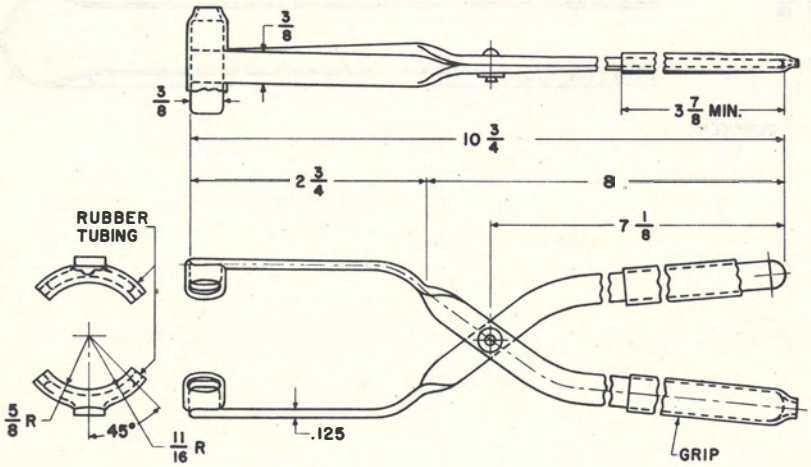

KS-7479 Extractor

Used in conjunction with a red eraser for making microphonic tests on vacuum tubes which are used in telephone repeaters, especially program repeaters. Tip is designed so that it may accommodate a cushioning-type material, such as phenol fabric, if desired.

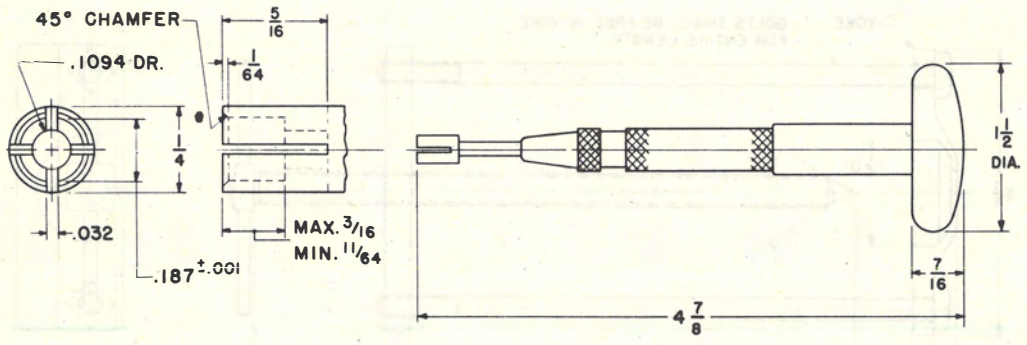

KS-13753 Tube Extractor

Used in extracting miniature vacuum tubes, such as the 399A, 400A, and 401A, used in the type M1 carrier telephone system.

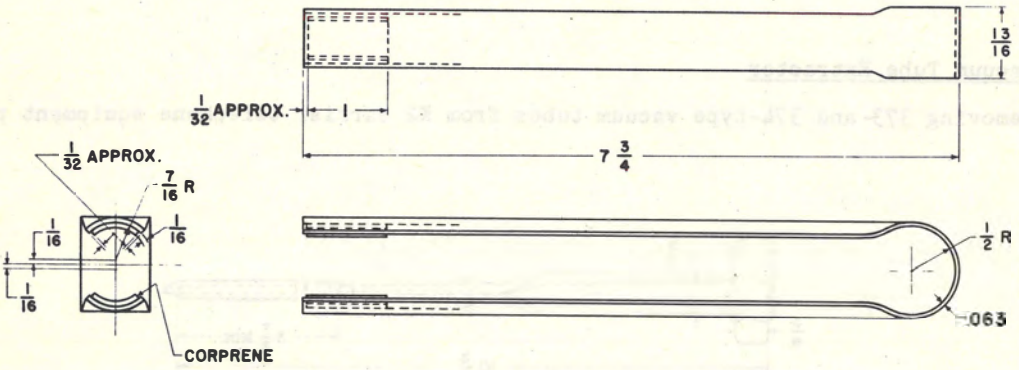

KS-14408 Tube Extractor

Used for inserting a 416A vacuum tube into a microwave cavity in the TD2 radio relay system. Consists of a barrel having rotating front and rear rings at one end which operate chuck jaws at the other end for holding the vacuum tube.

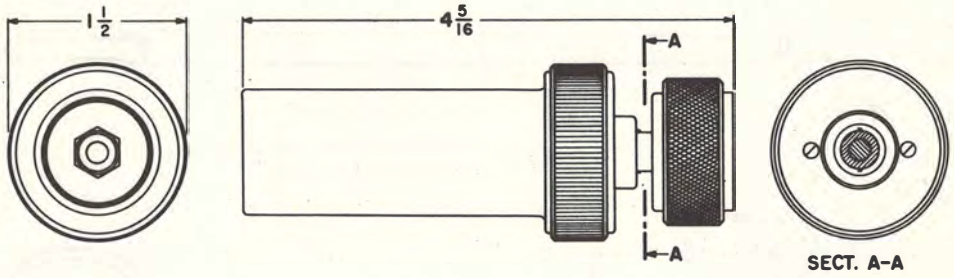

KS-14428 Tube Extractor

Used in extracting 375A vacuum tubes.

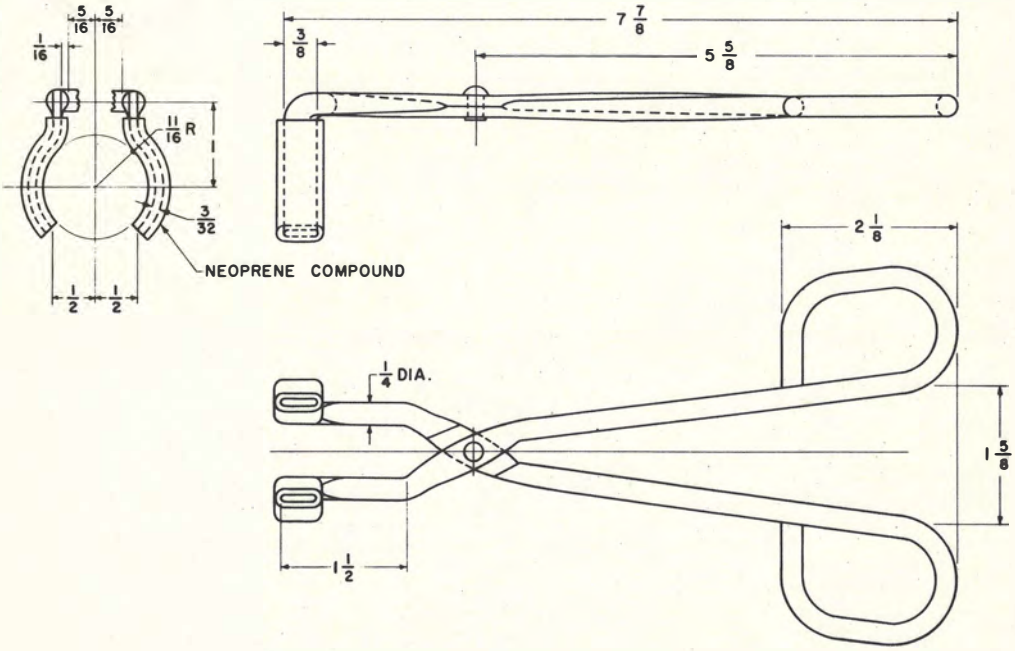

X-75515

KS-14457 Pin Extractor

Used in removing and replacing pins in the KS-13882, Lists 1 and 2 perforators for the automatic message accounting systems.

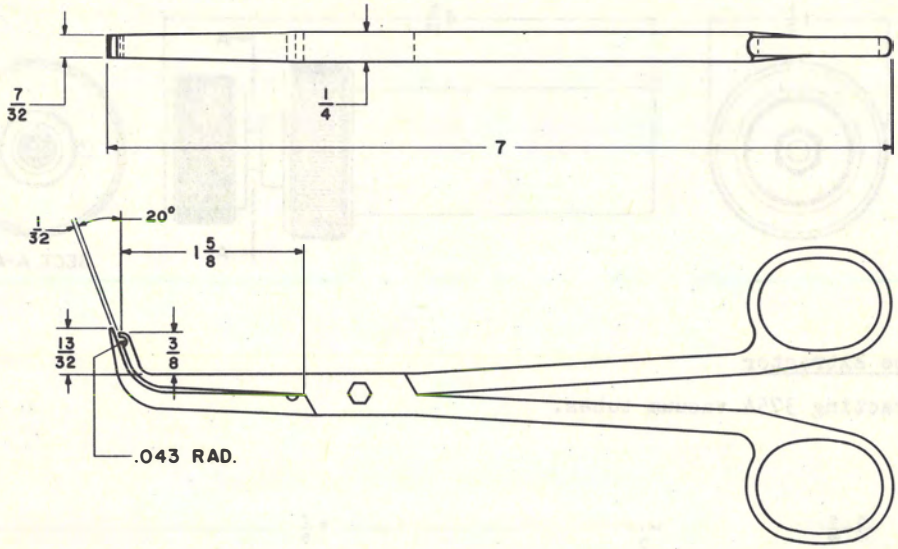

GENERAL PURPOSE TOOLS
SECTIONS 6-10

GENERAL PURPOSE TOOLS
SECTIONS 6-10

LUBRICATING DEVICES

353C Tool

Designed to discharge grease in definite limited quantities. Used with the 570A or 571A tools for lubricating sequence switch camshaft bearings, power-driven selector rotor bearings, and 206-type selectors equipped with drilled rotor shafts. Forms a part of the 1003A tool kit.

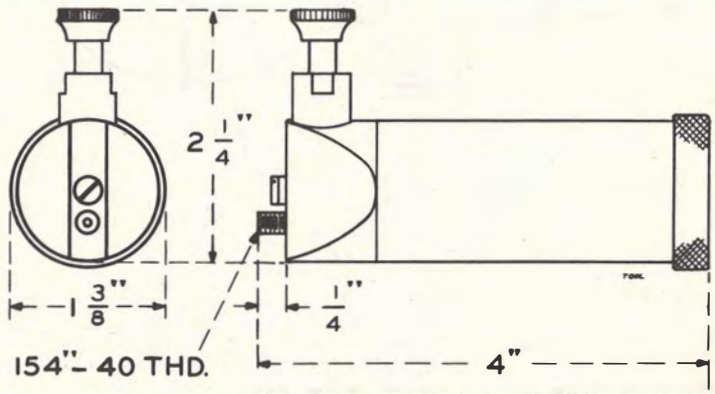

401A Tool

Designed to discharge oil in definite limited quantities. Used for lubricating 5-type dials. Furnished with a wooden carrying case.

X-75515

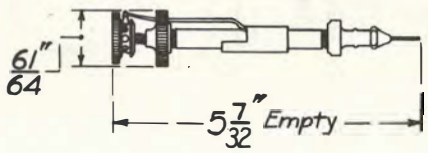

431A Tool

Used in lubricating bearings. designed to discharge oil in definite limited quantities. Furnished with a wooden carrying case and two nozzles, one straight and one curved.

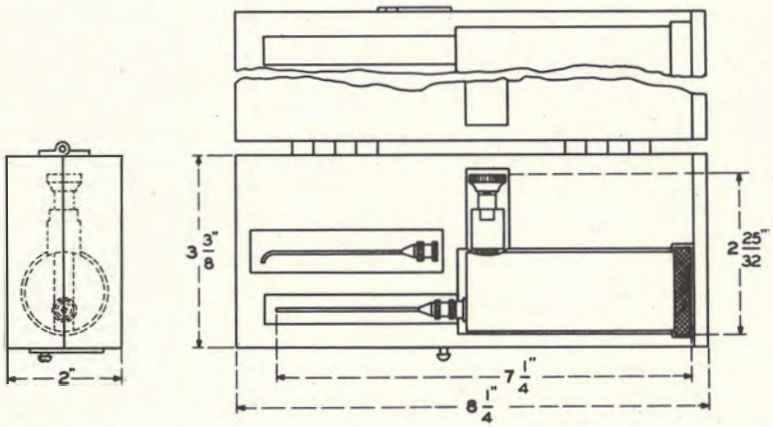

480A Tool

Used for injecting lubricating compound into 49-type jacks for maintenance purposes.

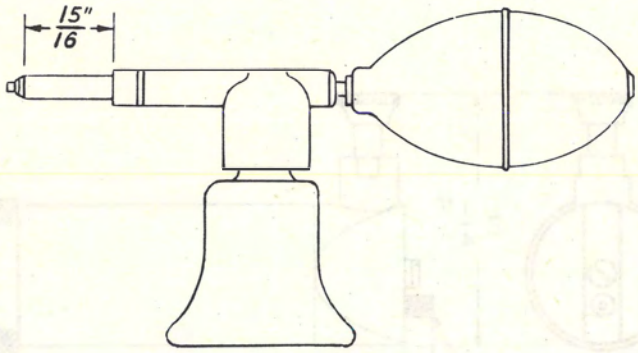

486A Tool

Used in lubricating fulcrum pins of universal-type keys.

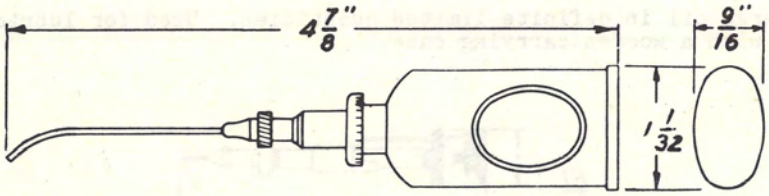

552A Tool

Used in lubricating the friction washer of the coil spring release mechanism on coin timers used in crossbar dial systems.

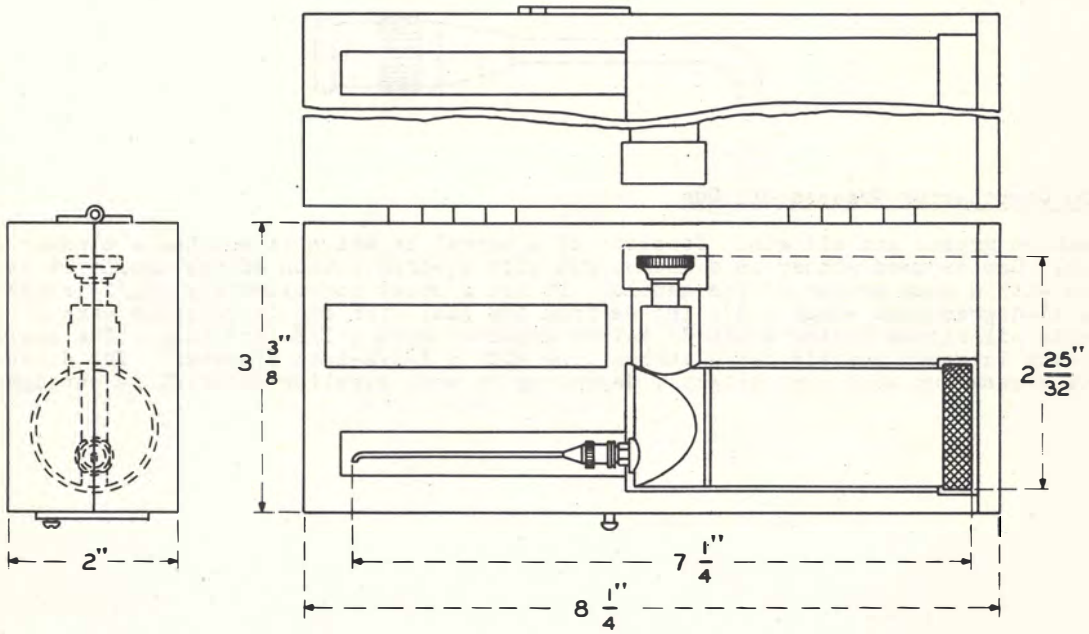

X-75515

570A Tool

A straight nozzle used in lubricating. This tool forms part of the 1003A tool kit and 431A tool. Also used on the 353C tool.

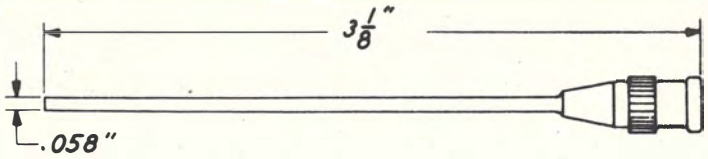

571A Tool

A curved nozzle. Used on the 353C tool for lubricating 206-type selectors equipped with drilled rotor shafts. Forms part of the 1003A tool kit.

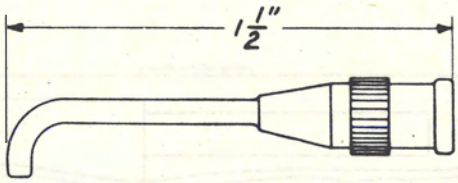

KS-5000 Combination Greased Oil Gun

Combination grease and oil gun. Consists of a barrel in which is mounted a plunger and spindle. Can be used either as a grease gun with a screw action of the handle or as an oil gun with a pump action of the handle. It has a spout approximately 3-1/2 inches long with a 15-degree bend about 1-3/4 inches from the gun. The end is equipped with a removable oil nipple having a tip 3/16-inch diameter with a 1/8-inch hold. The barrel of the gun is approximately 6-3/4 inches long with a 1-3/4-inch diameter. The dimensions of this grease gun will vary slightly depending on what supplier material is obtained from.

KS-8239 Tool

An oil can, nozzle, and valve. The oil can is used for lubricating teletypewriter apparatus. It is adjusted to deliver a certain amount of oil at each full stroke. It holds 4 ounces. The valve and nozzle are field replacement parts for the oil can.

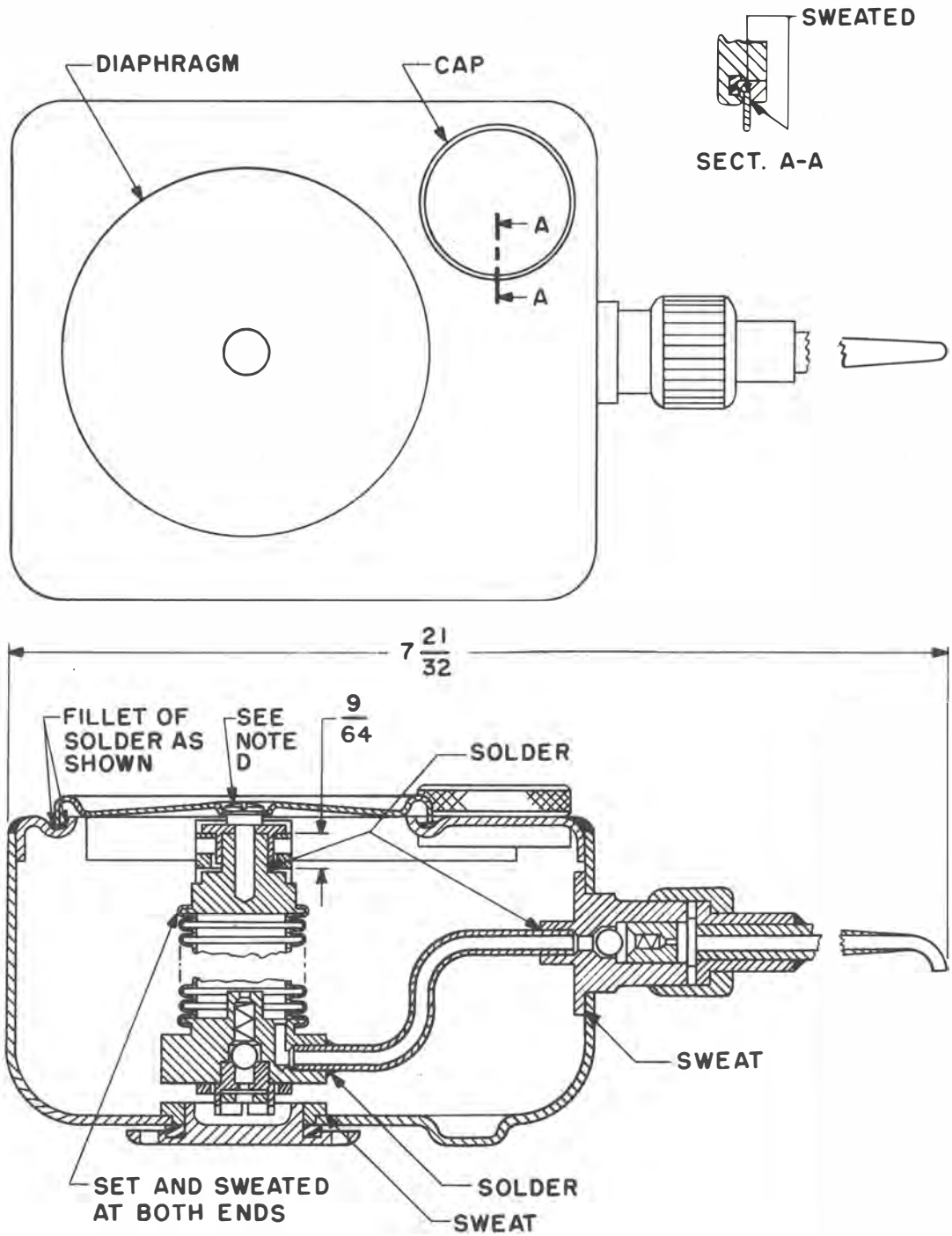

376A Tool

Used as a visual aid in adjusting relays, selectors, etc. Metal surfaces are insulated.

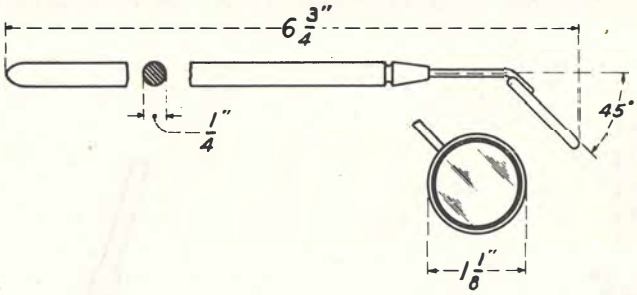

442A Tool

Used for providing illumination for the inspection and repair of skinners and multiple jack connections. Equipped with a W2AL cord, two No. 360A tools, and two test clips. Arranged for, but not equipped with an A2 lamp. A B1 lamp may be used if greater illumination is required.

X-75515

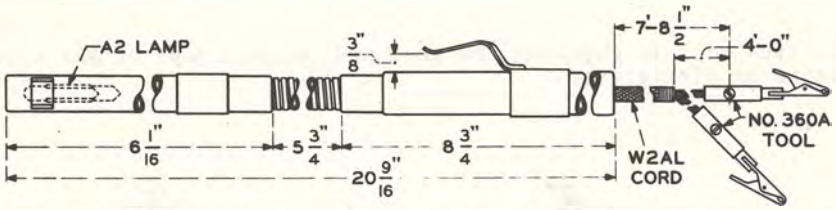

510C Tool

Consists of a lamp case and an adjustable lens. Used with the 561A and 562A tools to project light on apparatus being checked. When used with the 561A tool it is used for illumination when checking the parallelism between the bank brush shoe and the associated terminals in panel-type dial telephone systems. Lamp case is equipped with a No. 243 G. E. mazda lamp, a lamp socket, and a cap. The cap holds the reflector tip tools in place and also acts as a switch. A W2BL or W2CB cord is required for use with this tool.

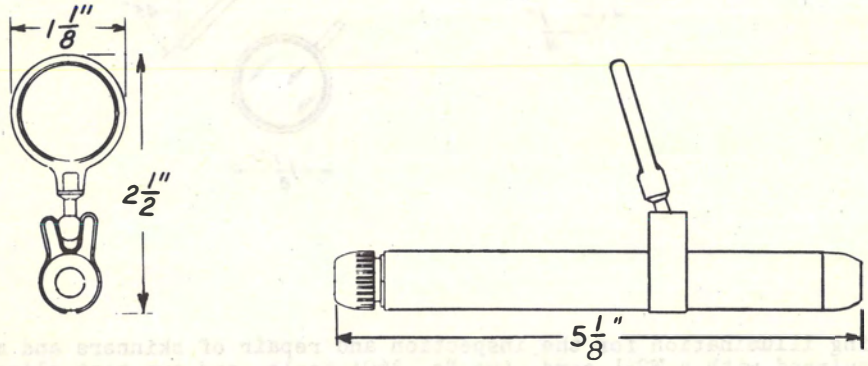

561A Tool

Used with the 510-type tool in checking the stud and contact gaps of all types of relays. Made of clear lucite or plexiglass.

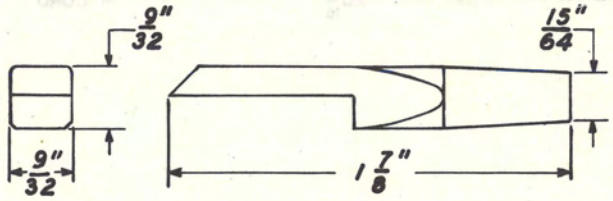

562A and 562B Tool

The 562A tool is used with 510-type tool in checking the parallelism between the bank brush shoe and the associated terminals in panel-type dial systems. Made of light conducting material.
The 562B tool is used with 510-type tool in checking the stud gaps of U-, Y-, and UA-type relays. Made of cast methacrylate plastic.

Dimensions (inches)

	A	B
562A	3-1/8	3/64
562B	2-5/8	1/32

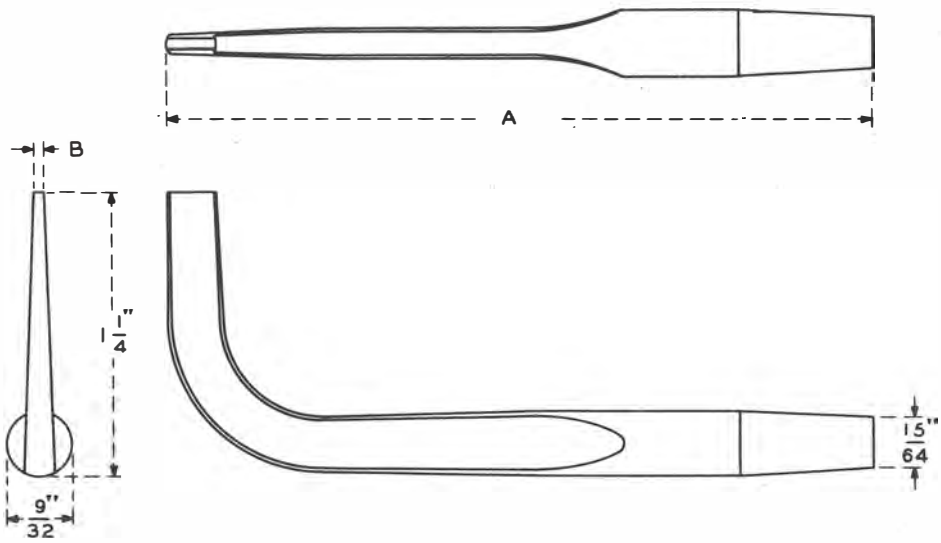

X-75515

AT-7423 Splicer's Mirror

A mirror used in examining parts of splices and cable sheath that cannot be viewed directly.

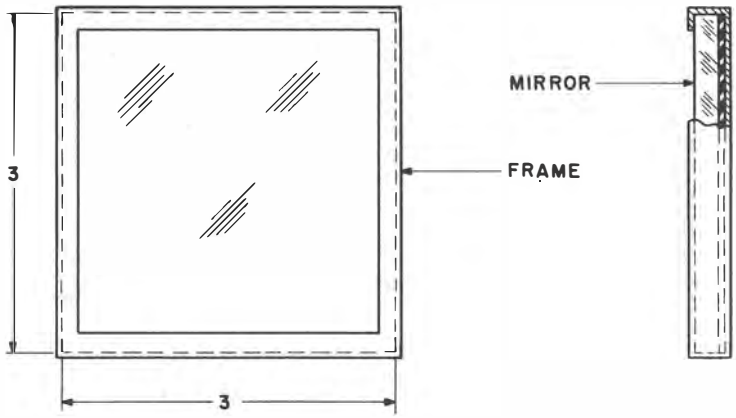

BENT NOSE

489A Tool

Long-nose pliers used for compressing the hard-rubber studs on panel multiple brushes for parallelism requirements.

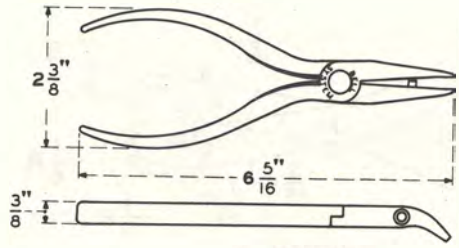

CABLE

AT-7020 B Cable Pliers

This tool is used for closing cable sheath after it has been slit and opened to expose the conductors for repair. Three openings of different sizes and contours are provided to accommodate cables from 1/2 to 1-1/2 inches in diameter. Made of malleable cast iron.

X-75515

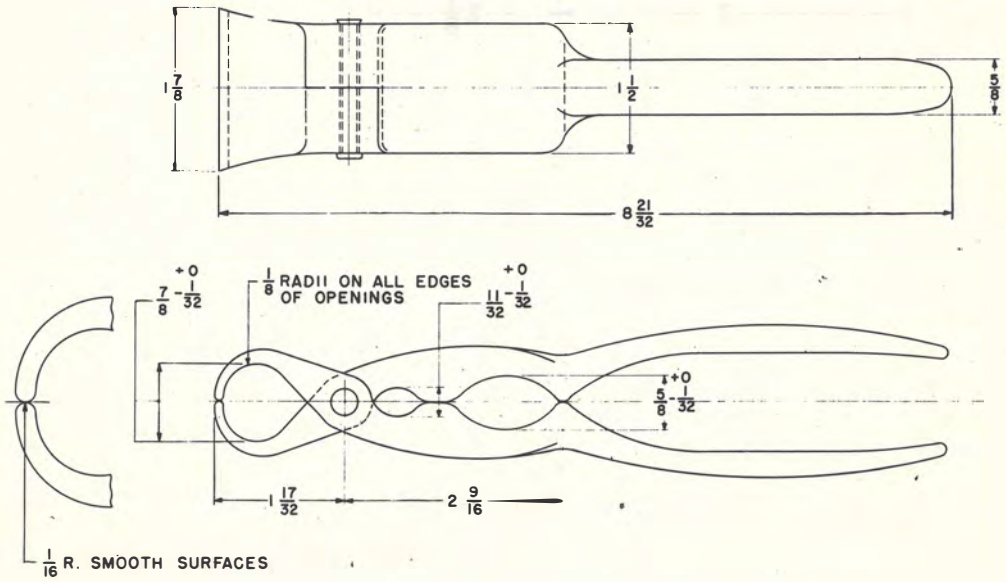

ENLARGED VIEW

COAXIAL

R-2786 Pliers Coaxial Jack Assembly

Used for compressing the spring assembly on coaxial jack body to permit insertion in the jack sleeve. Handles made of 1/8-inch phenolized canvas fibre.

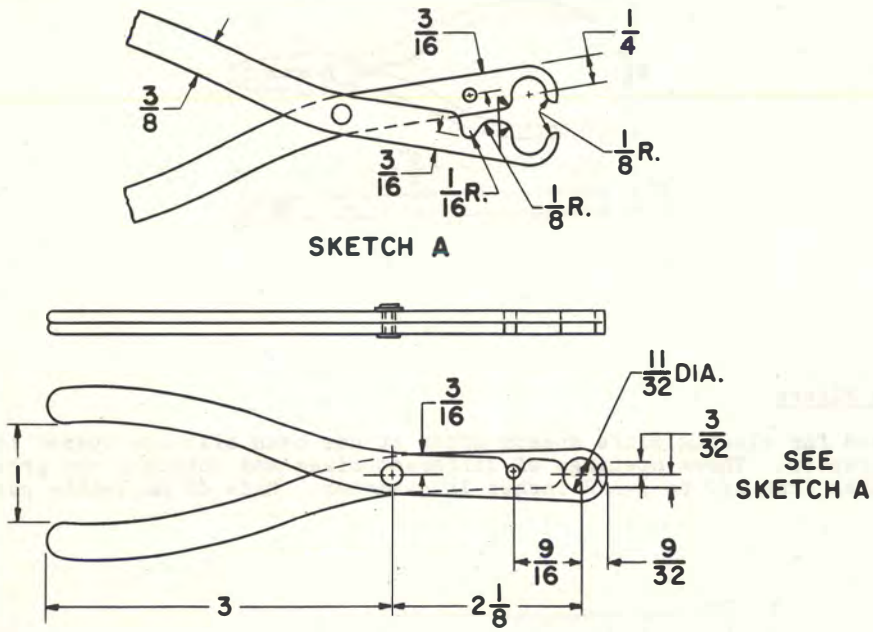

COAXIAL

AT-7175 Coaxial Pliers

These steel pliers, which are furnished in two sizes designated B270 and B375, are for use in splicing 0.270- and 0.375-inch coaxial conductors. The jaws have two openings, one adjacent to the nose for use when removing the outer conductor of the coaxial and the other adjacent to the joint to crimp rings over the steel tape of the coaxial and over the outer connecting sleeve. The pliers are provided with a link for locking the handles in the closed position.

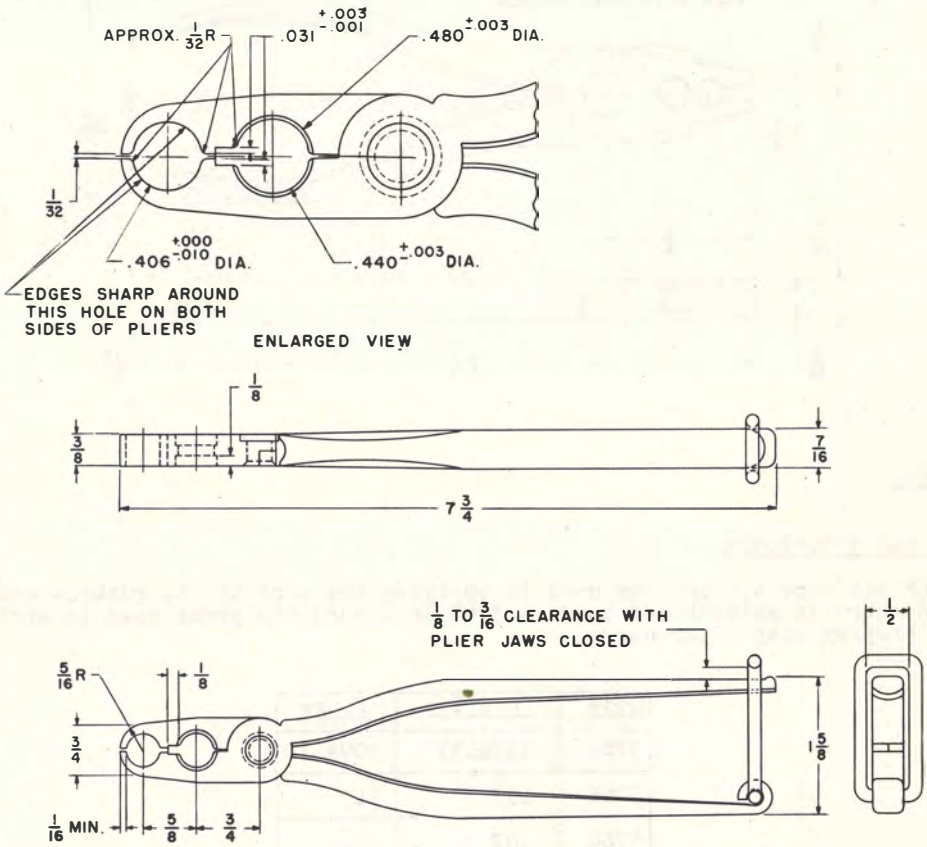

X-75515

CORD GRIPPING

255 Tool

Grooved pliers used in conjunction with the 201, 202, 316, and 317 tools in repairing switchboard cords.

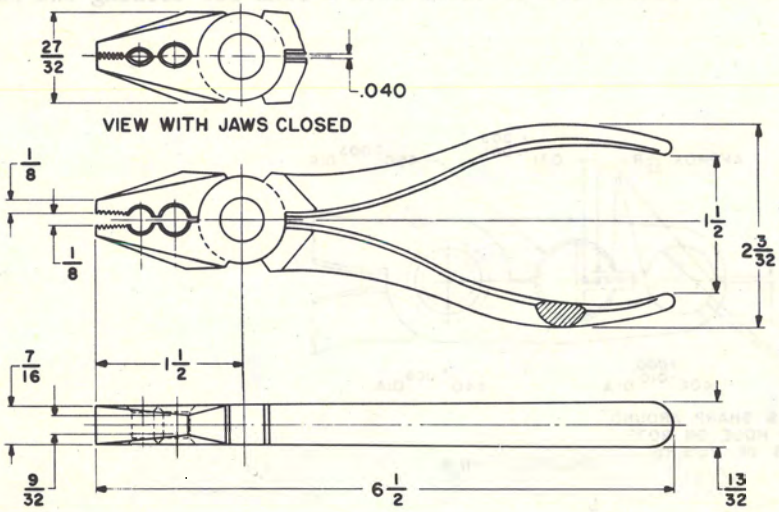

CORD TIP PRESS

576A, 576B, and 576C Tools

576A and 576B are cord tip presses used in applying the cord tip to rubber- and textile-covered conductors in switchboard cords. 576C is a cord tip press used in applying the cord tip to step-by-step wiper cords.

Code	Cord Tip	Plugs
576A	132&133	309&310
576B	135	347
576C	107	-

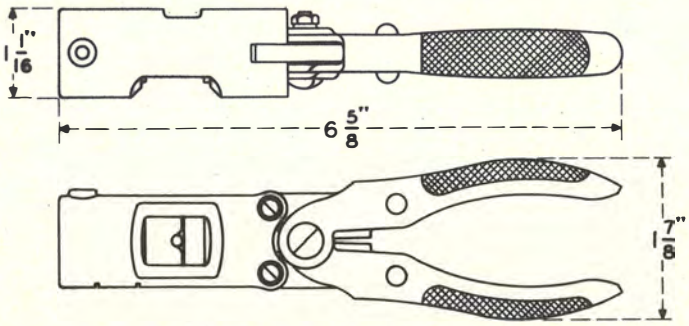

CRIMPING

No. 308 Tool

Used to shorten brush springs on 14-type commutator brushes.

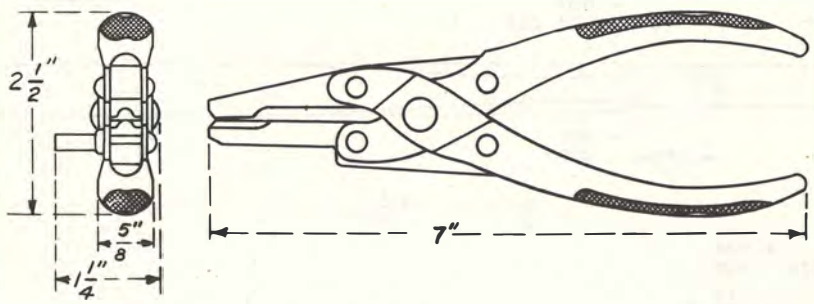

D-157299

Used in shortening springs of sequence switches in panel-type dial apparatus. Specially formed dies put a semicylindrical crimp in a flat spring, thereby shortening the spring approximately 0.080 inch. A helical spring with a pair of stop hooks is provided between the handles of the pliers and is arranged so as to give the desired opening between the dies when the handles are opened the full amount allowed by the stop hooks. An adjustable stop is provided.

X-75515

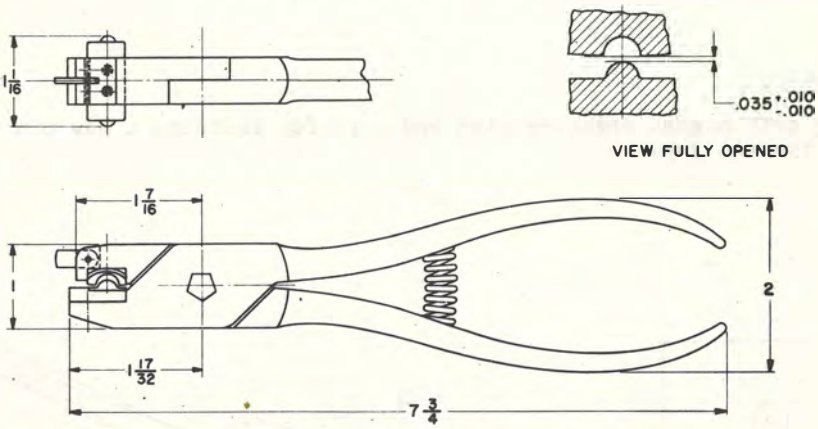

CRIMPING RING

AT-6874 Crimping Ring Pliers

Used for splicing spiral-four disc-insulated cable quads. The jaws form an opening for crimping rings over the steel tape of the cable quad and over the outer connecting sleeve.

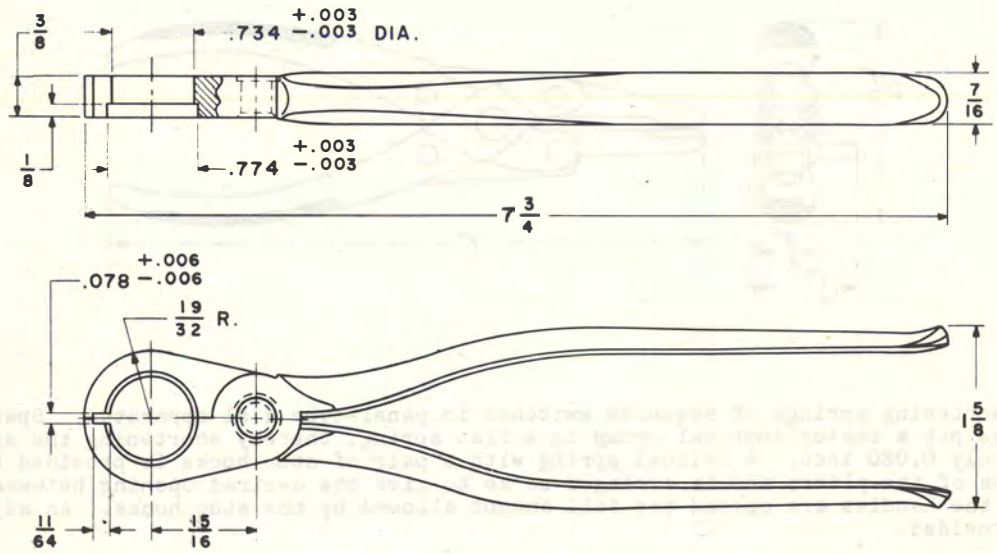

CUT-NIPPERS

KS-14439 Cut-Nippers

Used for cutting trip magnet armature pins and also for crimping a new pin in place. Equipped with a special jaw.

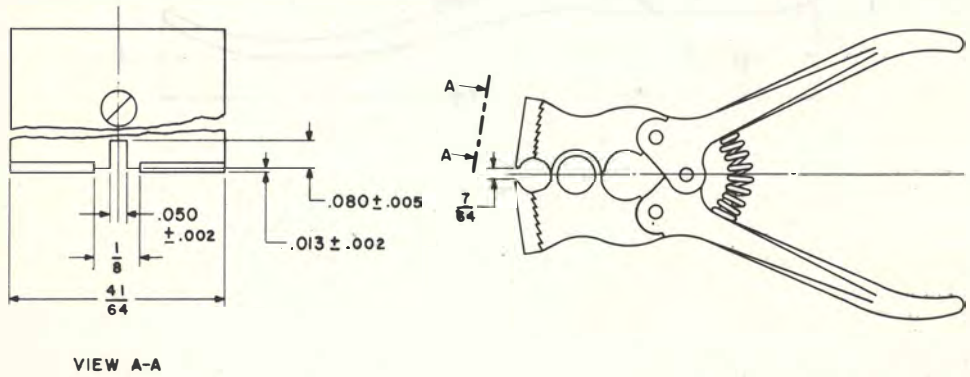

CUT-NIPPERS

KS-14442 Cut-Nippers

Used for cutting off worn contact springs on the contact spring assembly of sequence switches. Equipped with a special jaw.

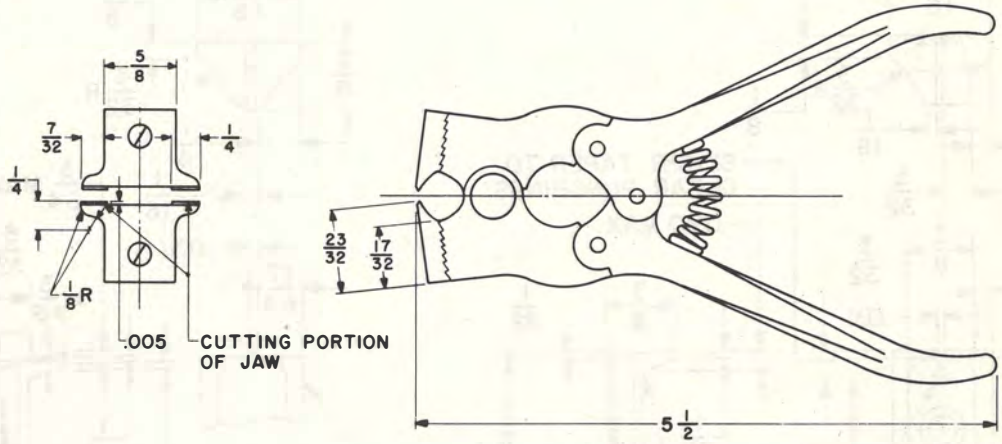

X-75515

CUT-NIPPERS

R-2528 Cut-Nippers

Used for cutting 1/32-inch slot in straps to separate groups where required on banks for link circuit frames. Removable guide furnished for use with banks.

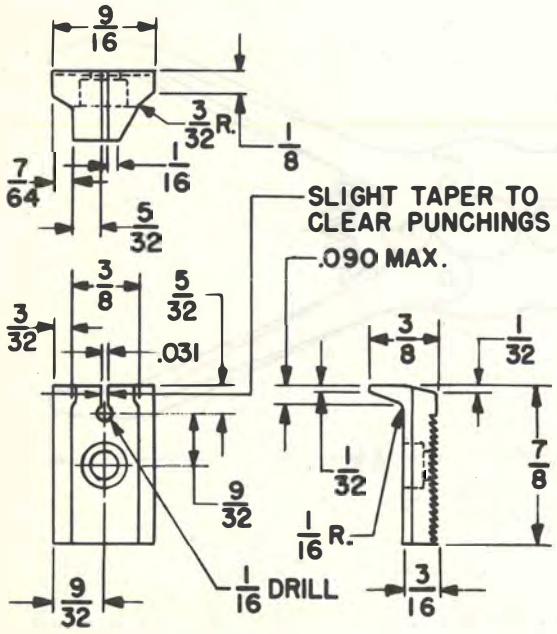

DET. 2

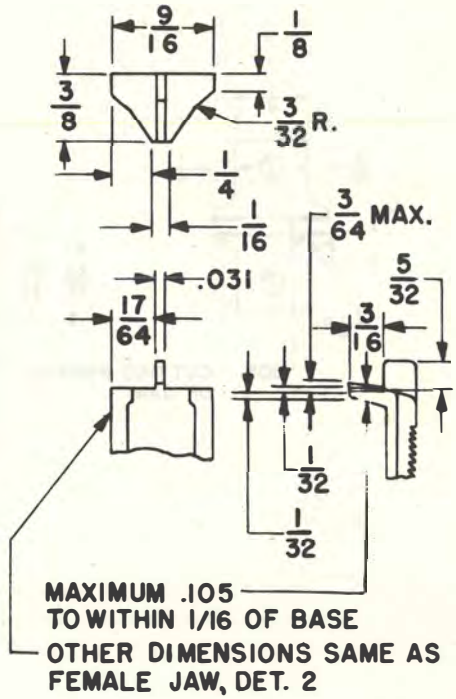

DET. 1

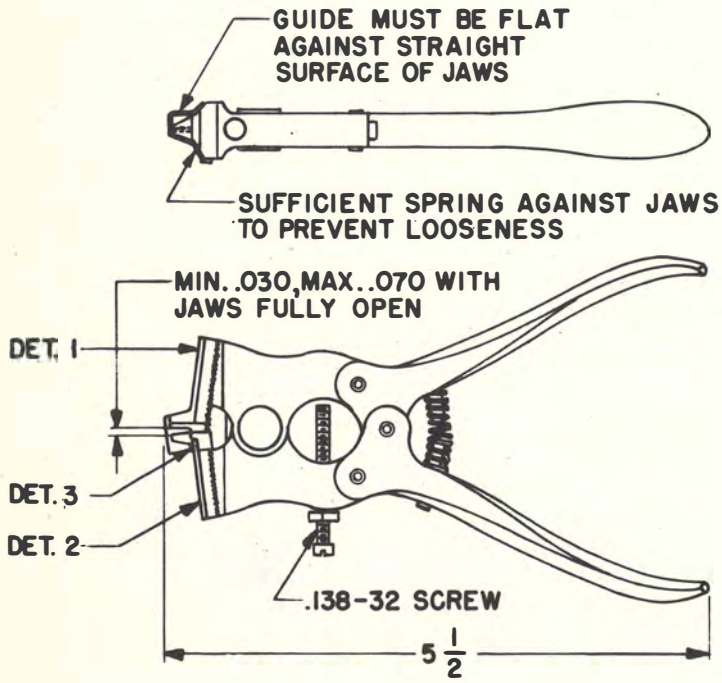

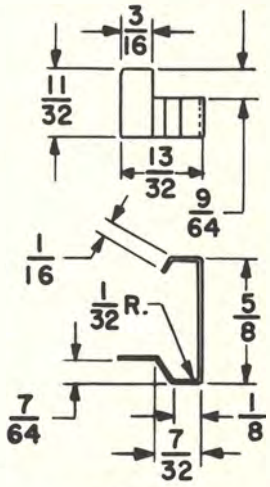

DET. 3

CUTTING

578B, 578C, 578D and 578E Tools

Contact cutting pliers for removing precious metal contact points from contact springs. Design is such that cutters may be replaced when worn. 578B is for general stripping use. 578C has an adjustable cutting stroke used for removing eroded contacts from multicontact relays and relays with offset contact spring. 578D is used in repairing contact springs on the KS-13835 reader of the automatic message accounting system. 578E is used in removing precious metal contacts from the twin movable springs on wire spring relays. 578B, 578C, and 578D form part of the 1004A tool kit. 578E forms part of the 1011B tool kit.

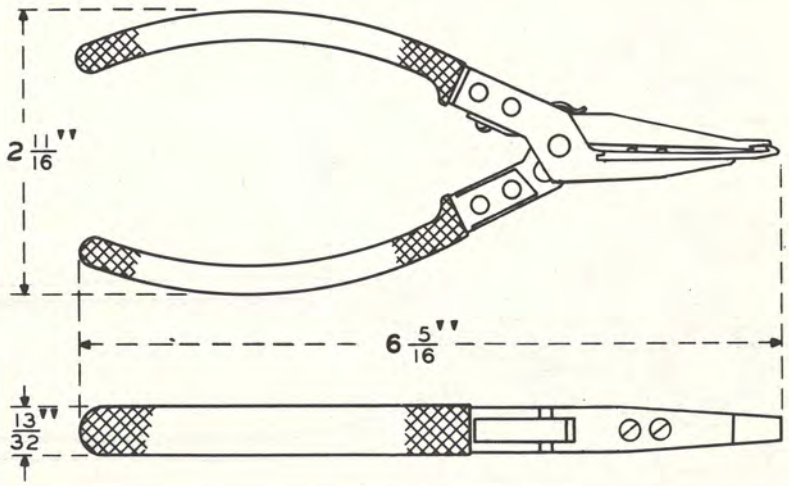

X-75515

AT-6655 Diagonal Pliers

5-inch diagonal are plain cutters for general use. Sharpened for cutting soft copper conductors of distributing frame wire.

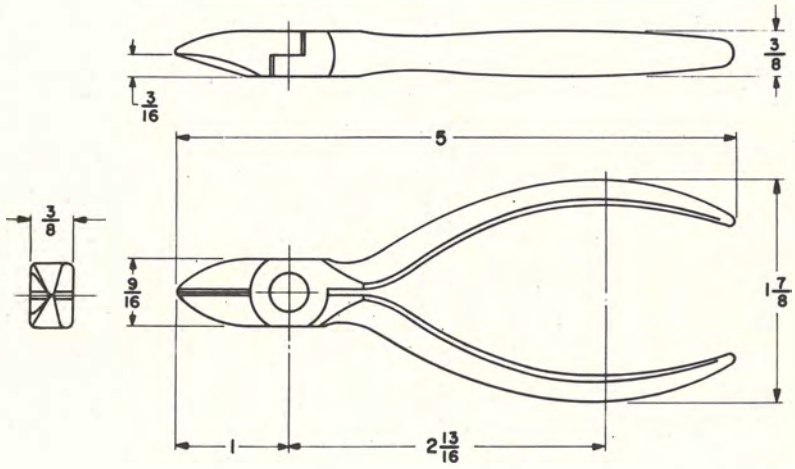

CUTTING

AT-6872 Shield Cutting Pliers

Used for removing the copper shielding from spiral-four disc-insulated cable quads. They are provided with a link for locking the handles in the closed position.

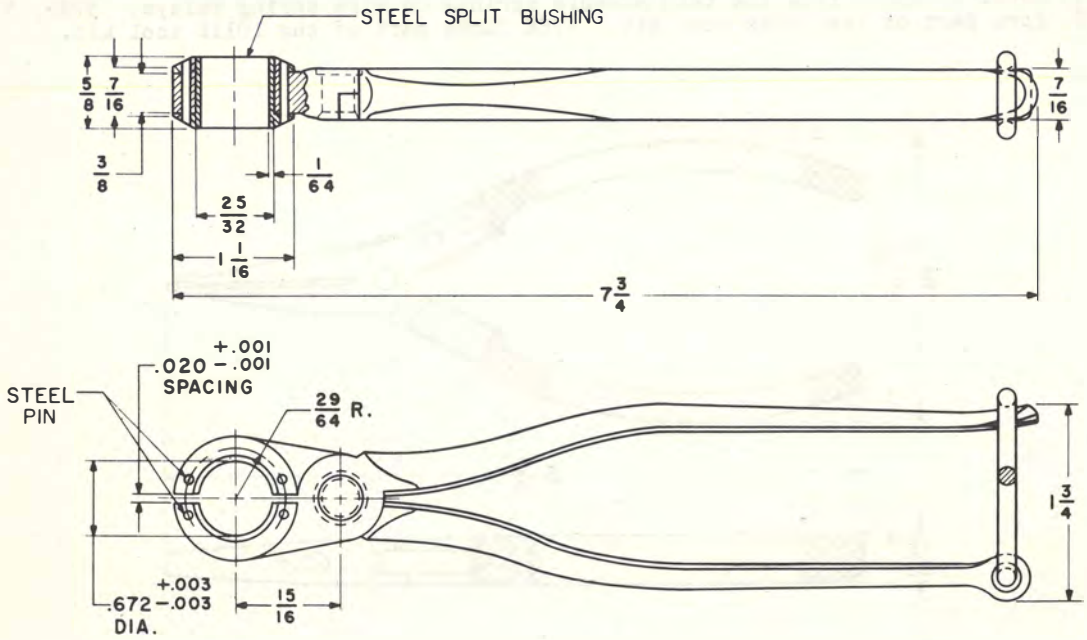

CUTTING

R-2556 Side Cutting Pliers

6-inch P side cutting pliers used for bending and cutting flexwire at distributing frames and general wiring operations using No. 14 or larger gauge wire. See diagram under AT-6649. AT-6649 has Bell System marking. R-2556 does not.

AT-6649 Side Cutting Pliers

6-inch P, 7-inch P, 8-inch P
Side cutting pliers (P-indicating plain pliers). The 6-inch and the 7-inch sizes are light pliers for the use of wiring forces on insulated wire and the smaller sizes of line wire. The sleeve grooves are identical and will accommodate 036 to 083 double tube copper and steel sleeves. The 8-inch size is intended for heavy duty in construction and maintenance work. The sleeve grooves will accommodate 080 to 109 double tube sleeves.

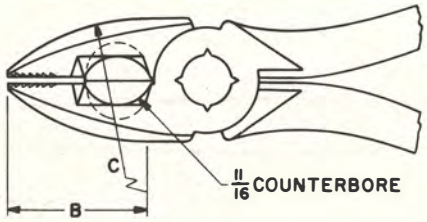

X-75515

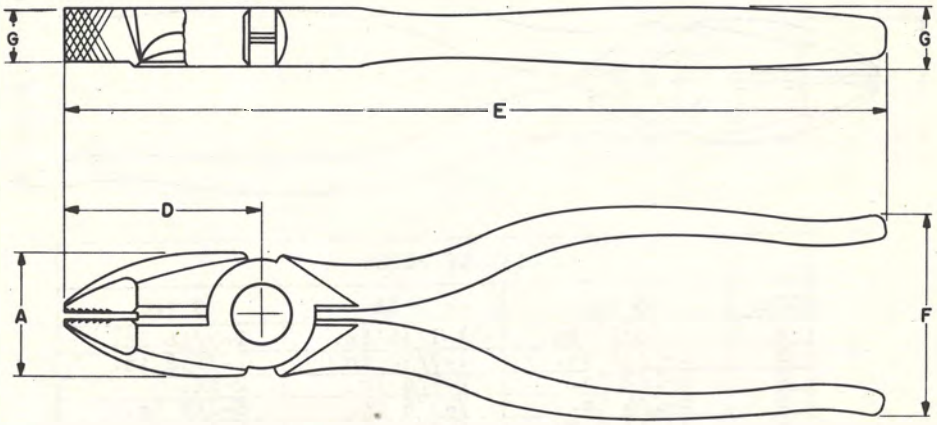

SIZE OF PLIER			
DIM.	6 in.	7 in.	8 in.
A	15/16 in.	1-1/16 in.	1-3/16 in.
B	1-5/32 in.	1-7/32 in.	1-5/32 in.
C	2 in.	1-7/8 in.	1-5/8 in.
D	1-1/2 in.	1-3/4 in.	2 in.
E	6-1/4 in.	7-3/8 in.	8-1/2 in.
F	1-11/16 in.	1-3/4 in.	1-3/4 in.
G	13/32 in.	7/16 in.	9/16 in.

CUTTING

AT-6649 Side Cutting Pliers

6-inch S, 7-inch S, 8-inch S
Side cutting pliers equipped with grooves for twisting sleeve joints in wire.
Description under 6-inch P, 7-inch P, 8-inch P.

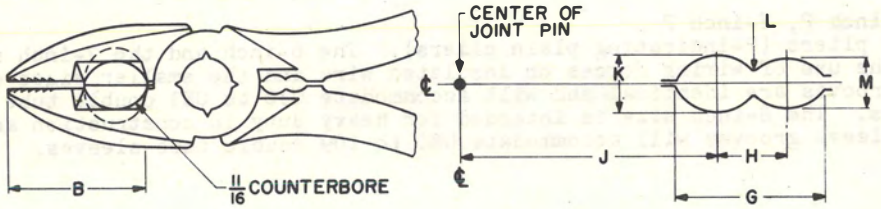

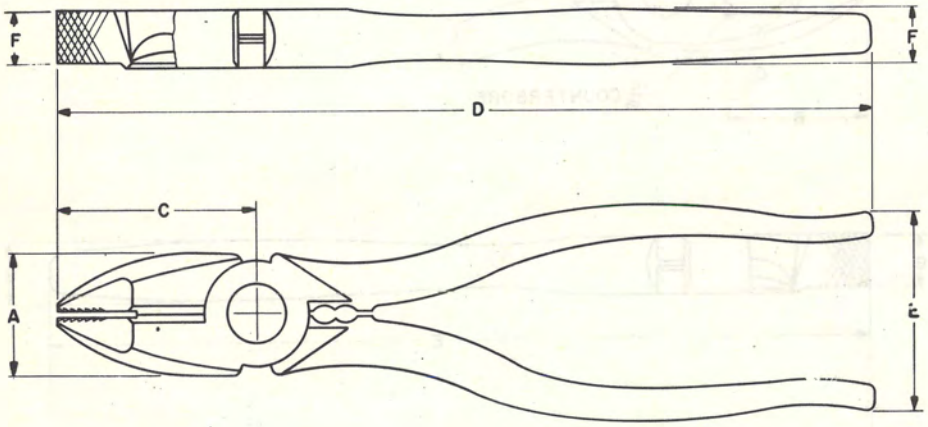

SIZE OF PLIER			
DIM.	6 in.	7 in.	8 in.
A	15/16 in.	1-1/16 in.	1-3/16 in.
B	1-5/32 in.	1-7/32 in	1-5/32 in.
C	1-1/2 in.	1-3/4 in.	2 in.
D	6-1/4 in.	7-3/8 in.	8-1/2 in.
E	1-11/16 in.	1-3/4 in.	1-3/4 in.
F	13/32 in.	7/16 in.	9/16 in.
G	0.320 in. Min	0.320 in. Min	0.390 in. Min
H	0.150 in.	0.150 in.	0.160 in.
J	0.580 in.	0.656 in.	0.810 in.
K	0.110 in.	0.110 in.	0.130 in.
L	0.055 in. Min	0.055 in. Min	0.080 in. Min
M	0.096 in.	0.096 in.	0.120 in.

DIAGONAL NOTCHED

KS-7139 Pliers

Notched diagonal pliers are for general use.

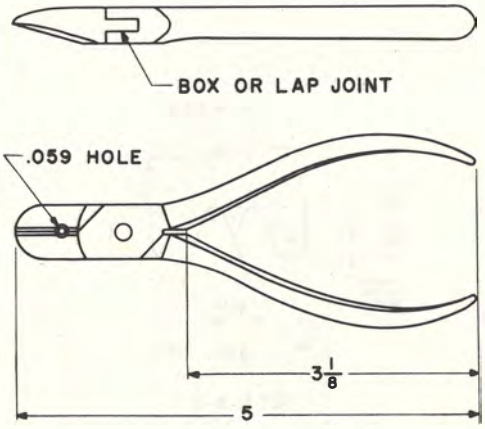

AT-6655 Diagonal Pliers

V-notch diagonal pliers for general use. Sharpened for cutting the copper conductors. The blades are sharpened for slitting the textile insulation of distributing frame wire. W-shaped notches in jaw for slitting the lacquered textile insulation and V notch for crushing flameproof-type insulation.

X-75515

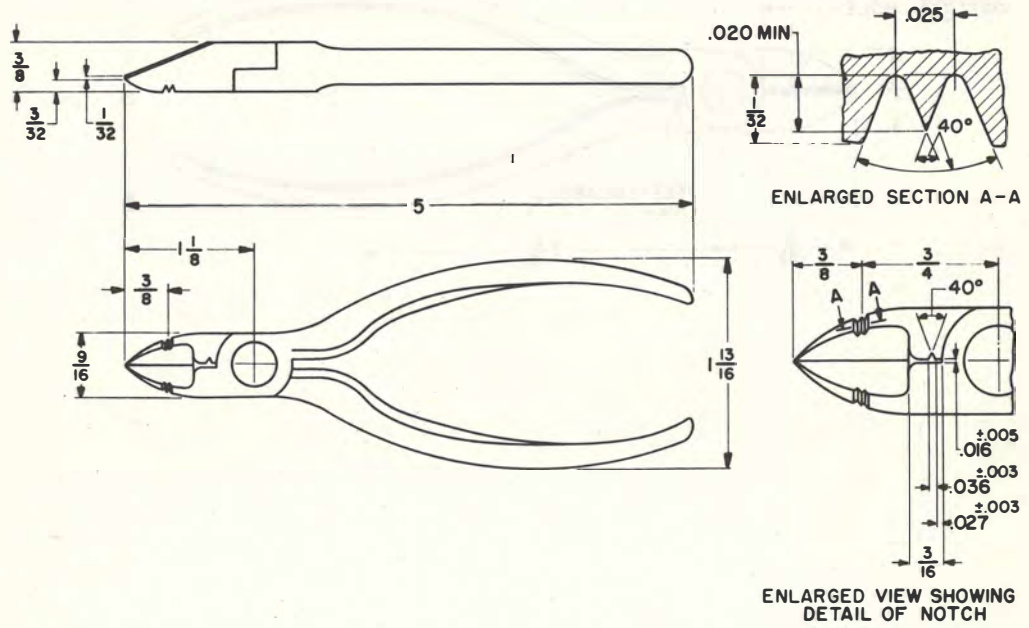

DIAGONAL NOTCHED

AT-6655 Diagonal Pliers

6-inch diagonal (SW indicates S diagonal pliers provided with a W skinning notch). Used for cutting rubber-covered service wires such as high strength drop wire as well as distributing frame wire. There is a skinning hole for removing the rubber insulation from the wire. W-shaped notches in the jaws for slitting textile insulation and sleeve grooves in the handles for making twisted-type sleeve joints.

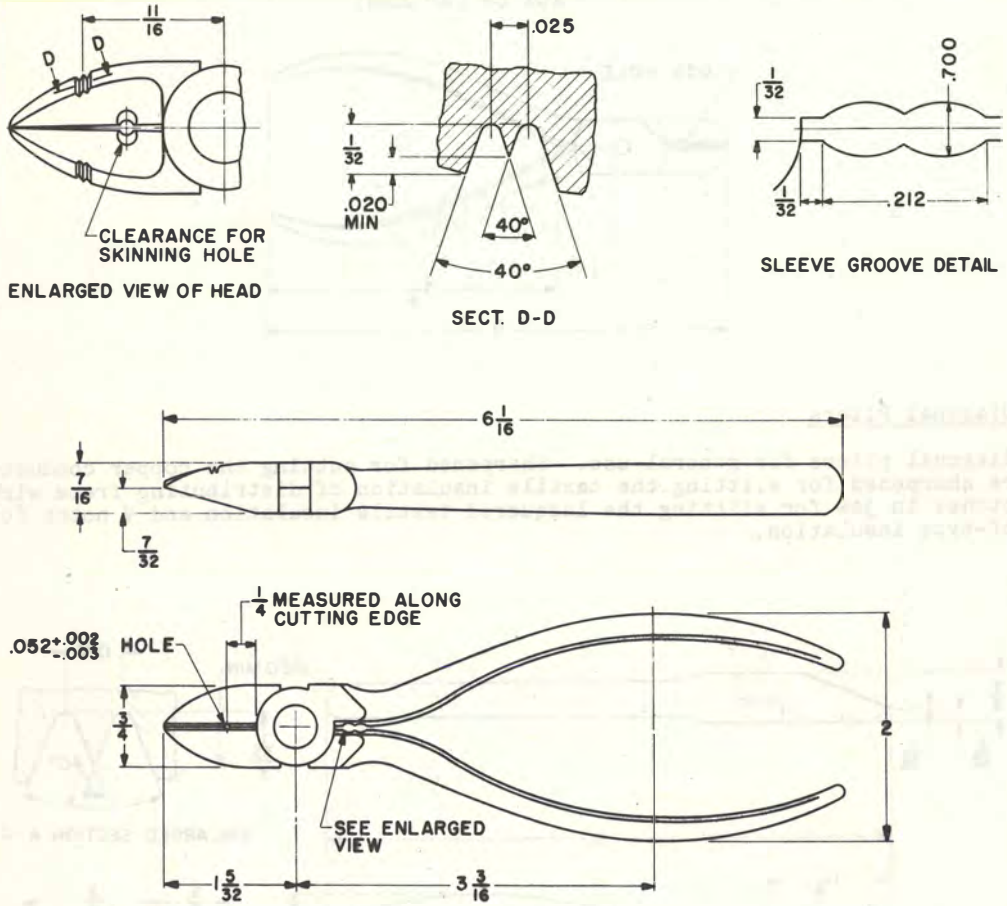

DUCK-BILL

KS-2827 Pliers

Long-nose duck-bill pliers used in extracting all types of heat coils.

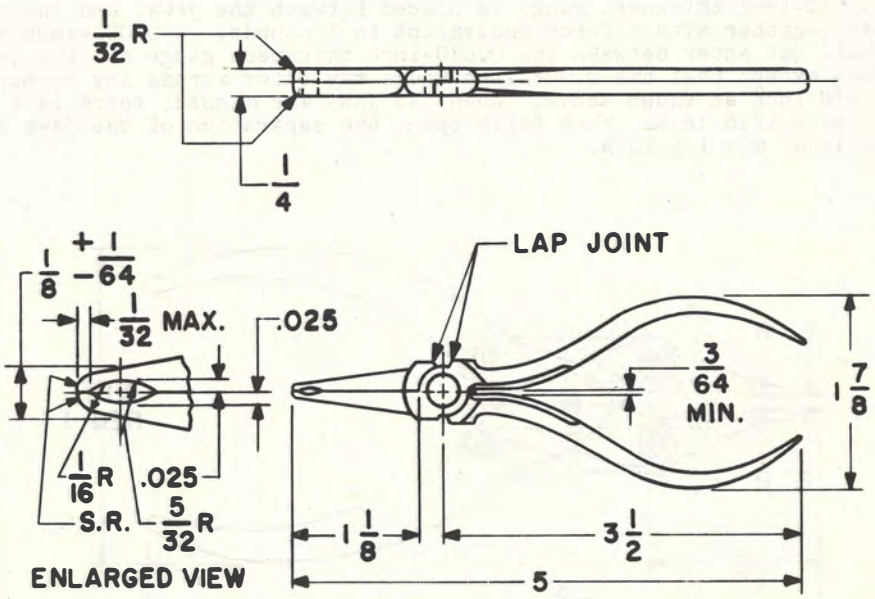

KS-6015 Pliers

Long-nose duck-bill pliers for general use such as adjusting key springs.

X-75515

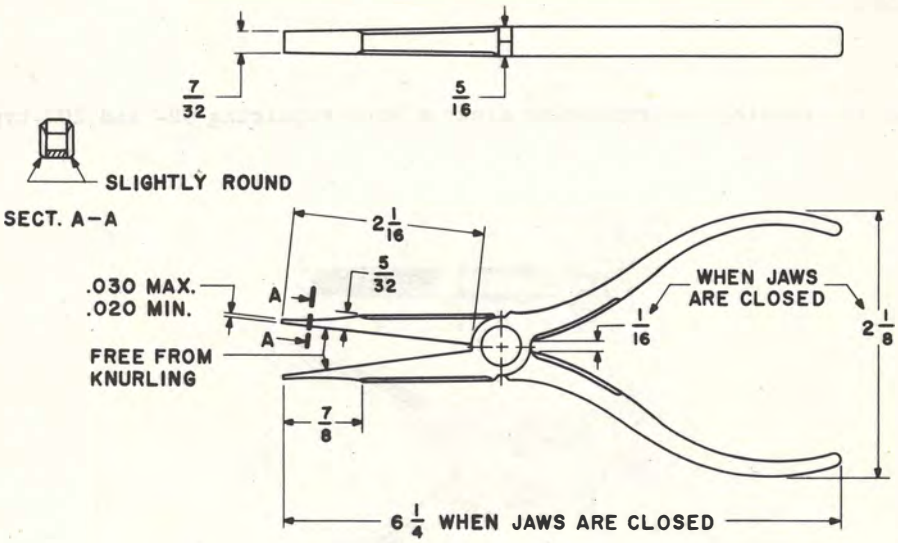

DUCK-BILL

KS-7782 Pliers

Short-nose duck-bill pliers for general use such as adjustment of universal-type keys.

Req 1 When the jaws are closed, the over-all dimensions of the handle shall be min 2-inches, max 2-1/4 inches.

Req 2 When a 0.030-inch thickness gauge is placed between the jaws, and the handles are tensioned together with a force equivalent to 3 pounds, a 0.002-inch thickness gauge shall not enter between the 0.030-inch thickness gauge and the jaws at points B-B or E-E except that the 0.002-inch gauge may enter across any corner not in excess of 1/8 inch as shown above. When the jaws are closed, there is a separation at A of at least 1/16 inch. When fully open, the separation of the jaws shall be min 3/16 inch, max 1/4 inch.

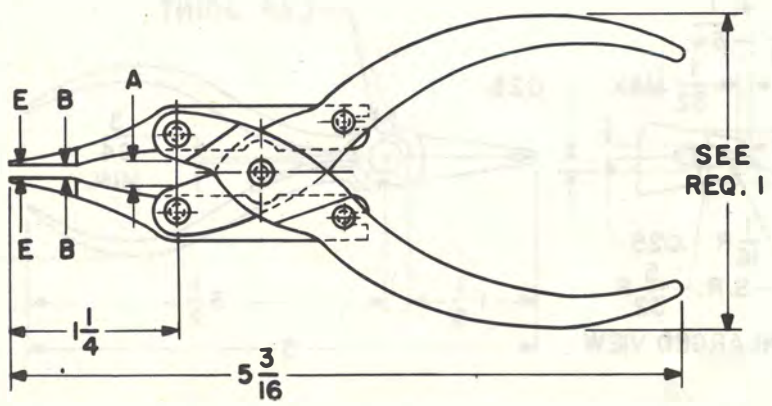

EXTRACTING TOOLS

345 Tool

Extractor used in removing and replacing sleeves when repairing 92- and 292-type jacks.

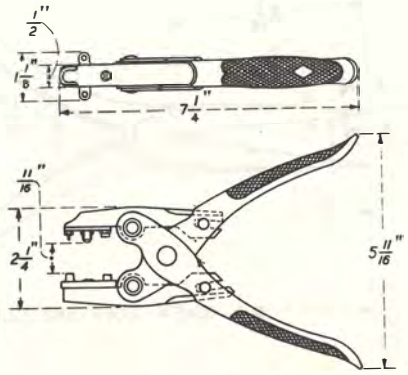

EXTRACTING TOOLS

210 Tool

Used for adjusting or removing 35/64-inch diameter key buttons on mechanical switching keys.

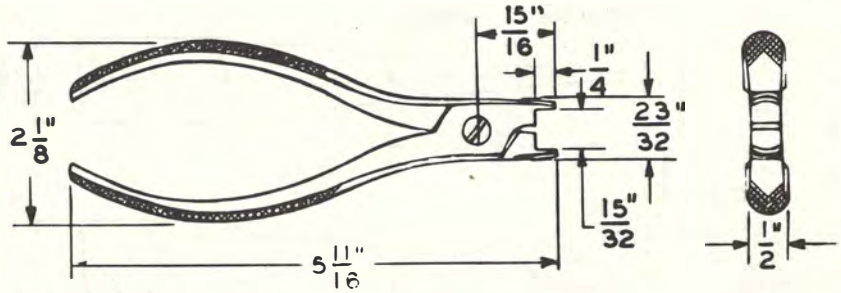

211 Tool

Used for adjusting or removing the 29/64-inch diameter key buttons on mechanical switching keys.

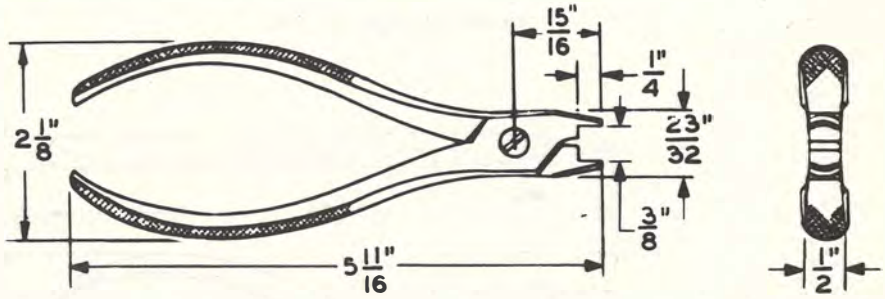

X-75515

EXTRACTING TOOLS

319B Tool

Extractor used in removing 2-, 4-, and 8-type lamp caps and 59-, 60-, and similar-type number plates.

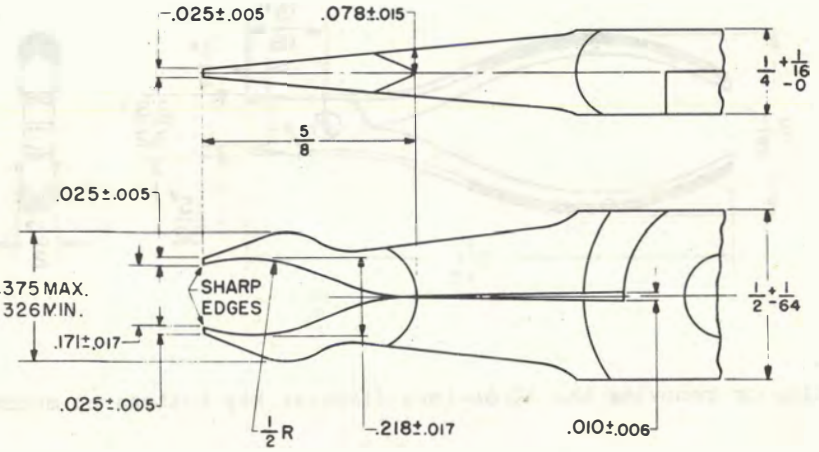

ENLARGED VIEWS OF END

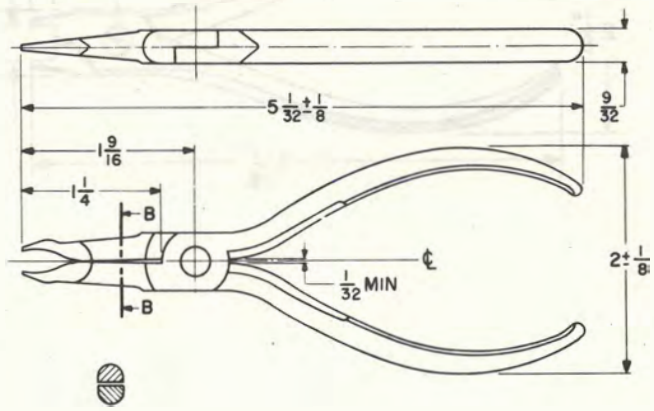

SECT. B-B

LONG NOSE

KS-14441 Pliers

Used for installing a new crimped wiper spring to the stub of a cut-off worn wiper spring in sequence switches. Clamping surface has score marks.

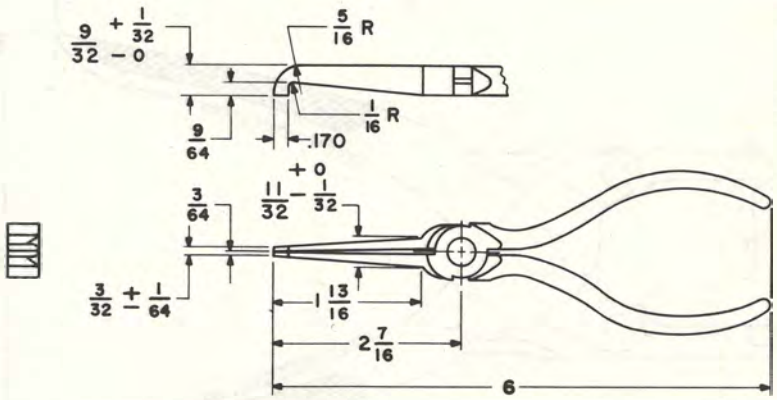

485A Tool

Used for general purpose such as spring adjustment of universal-type keys. Inside surface is smooth.

X-75515

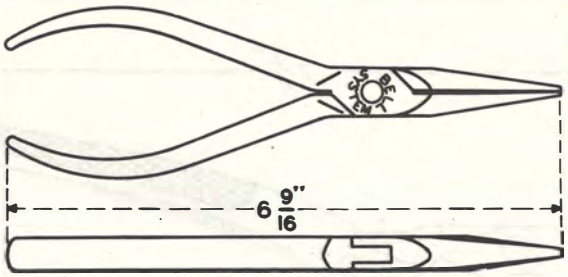

496A Tool

Used in removing and replacing pawl pins on 197- and 198-type switches. Diameter when pliers are open 3/64 at end. When they are closed 35 drive 110.

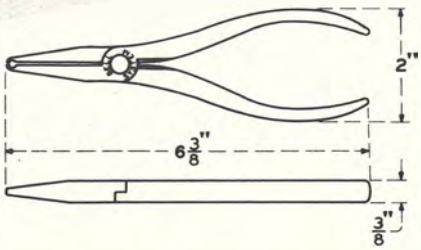

PAWL PIN

494B Tool

Parallel jaw pliers used in removing pawl pins on 197- and 198-type switches.

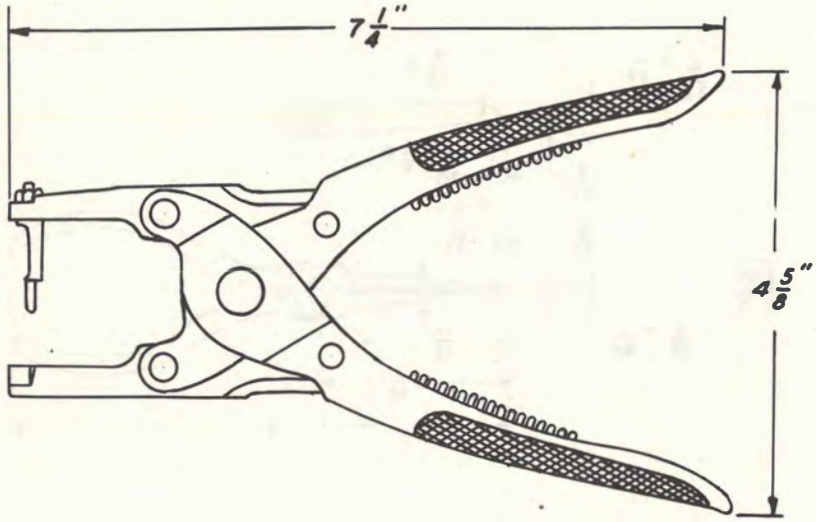

495A Tool

Parallel jaw pliers used in replacing pawl pins on 197- and 198-type switches.

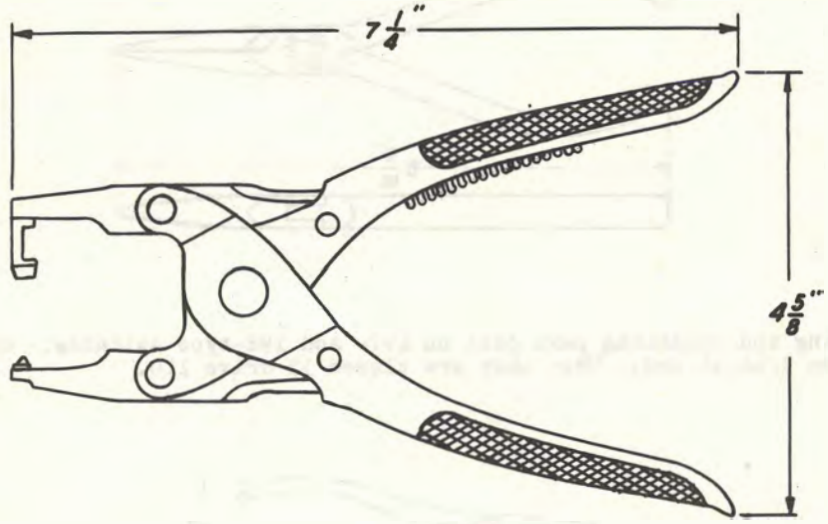

PUNCH

KS-14558 Punch

Used for cutting an inverted V notch in KS-14513 card used in connection with the 1A translator.

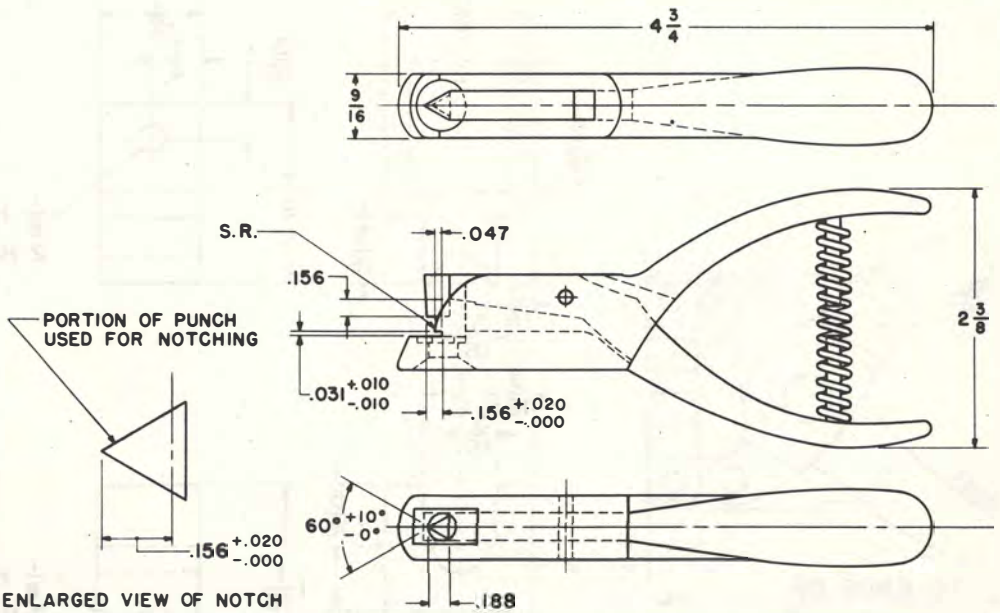

X-75515

ROUND NOSE

59 Tool

Long handle round-nose pliers for general use.

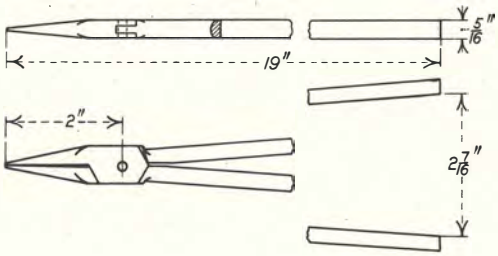

SHIELD COMPRESSING

R-2784 Setting Die

Used for compressing the tinned ends of shield on 720 and coaxial office cable to facilitate inserting into the associated coaxial-type jacks and plugs or ground clamps when connecting.

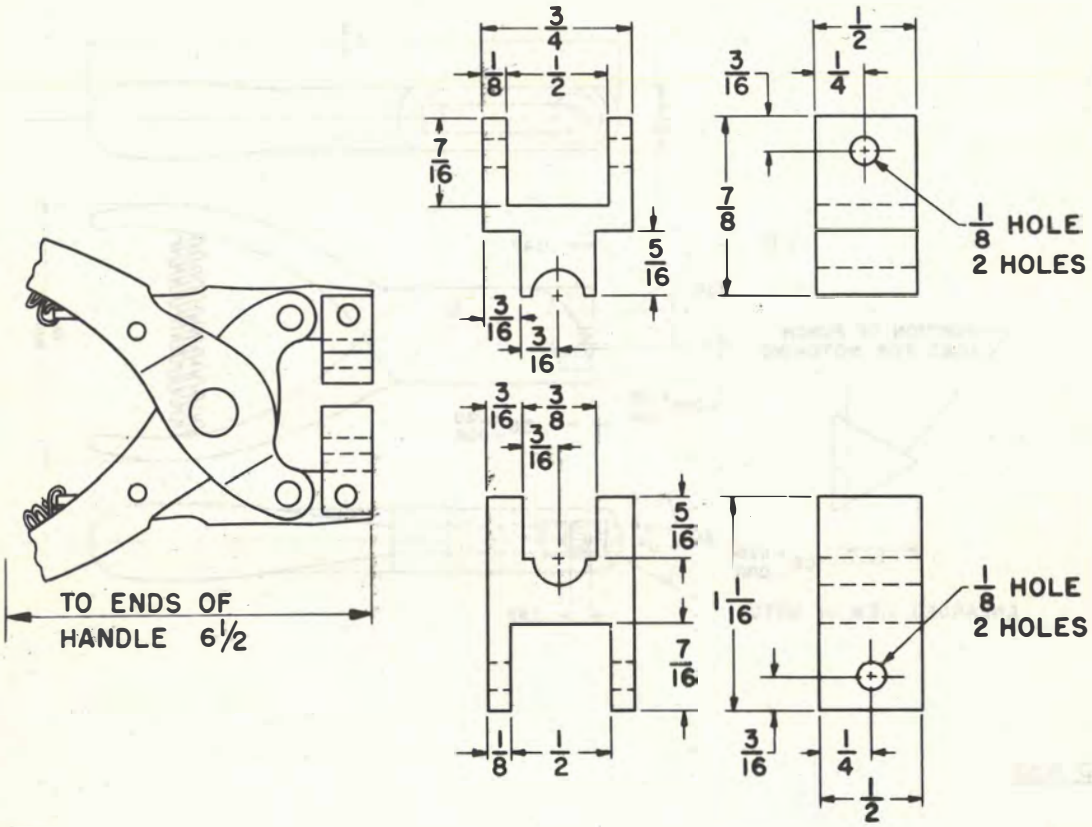

SLEEVE PRESSER

AT-7149 B and C Sleeve Presser

These tools are toggle mechanisms equipped with dies for pressing single sleeve joints in the conductors of certain types of insulated wires and in certain sizes of bare copper wire. They are so designed that curved bearing surfaces transmit the pressure from the handles to the jaws. The B sleeve presser dies have 2 grooves; the larger for 040, 045, and 064 conductors, and the smaller for 025 and 032 conductors. The C sleeve presser dies have one groove for 100 conductors.

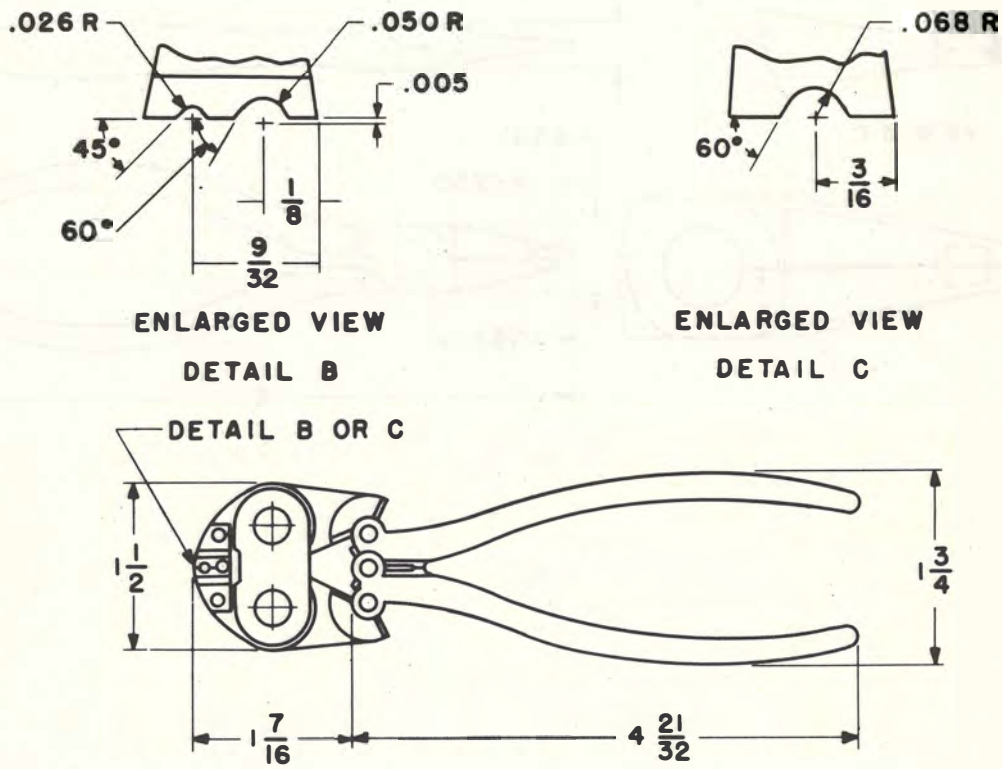

X-75515

SHORT NOSE

R-2978 Combination Pliers

Used for connecting wires to split-type terminals such as cross-connection wire run on Nos. 1 and 5 crossbar translator frames. Center cutter behind flat knurled nose for bending or cutting.

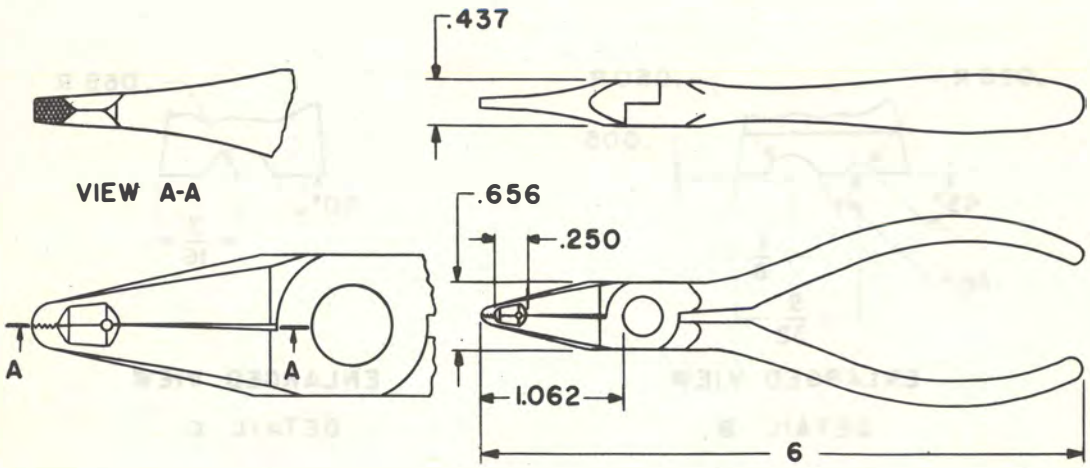

STRAIGHT SKINNING

R-2291 Short-nose Skinning Pliers

Short-nose skinning pliers used for skinning lacquered wire.

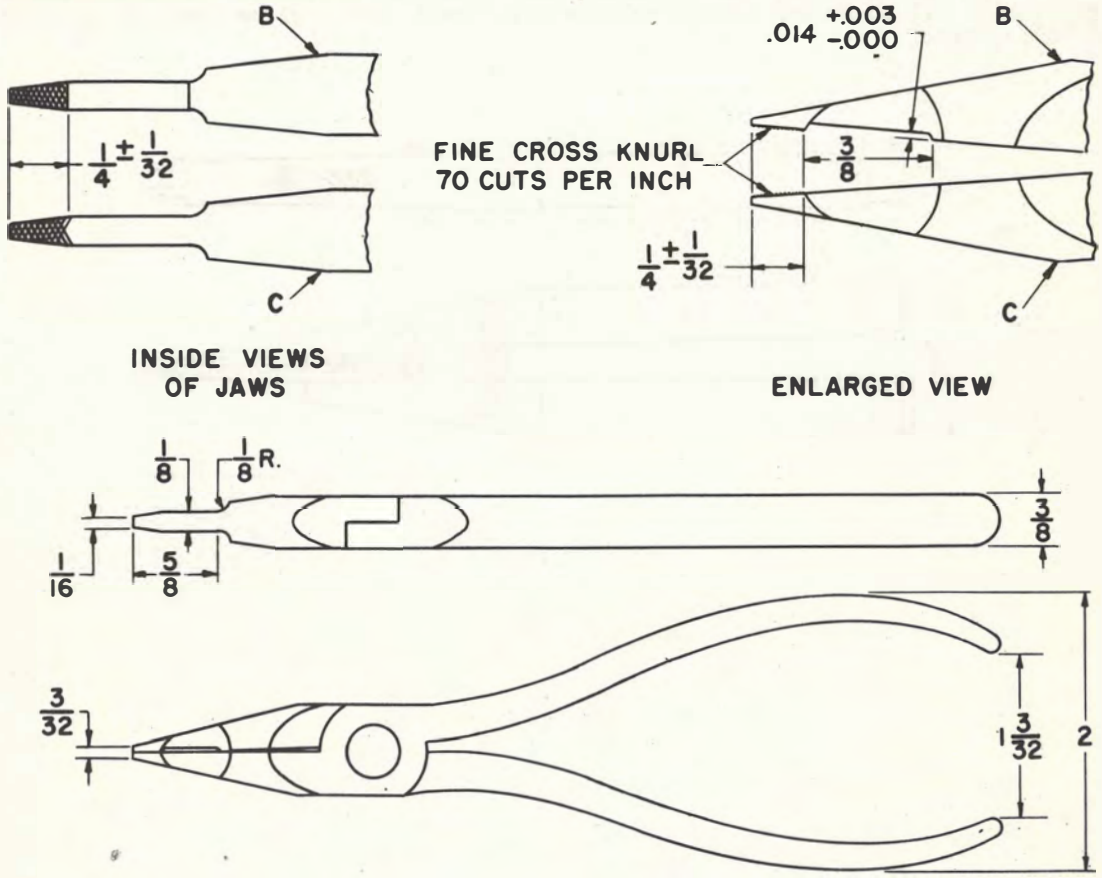

X-75515

WELDING

577A Tool

Light welding pliers consisting of two insulated handles which are mounted on jaws containing the electrodes. Used for replacing precious metal contact points on contact springs of relays and other apparatus. A kit, consisting of a small box of guides for use on various types of relays, an electrode, and two additional electrode assemblies are also provided with this tool. All soldering should be done with great care. Forms part of the 102A current supply set.

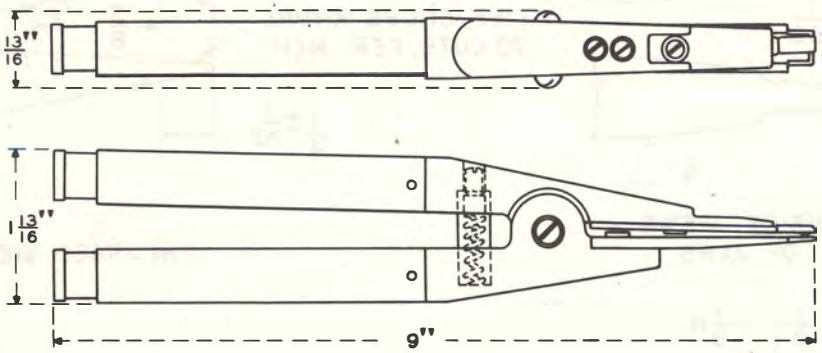

TIP THICKNESS 0.015 INCH

KS-2631 Screwdriver

A screwdriver used on the selector rod bearing clamp screws and for general purposes in panel dial systems.

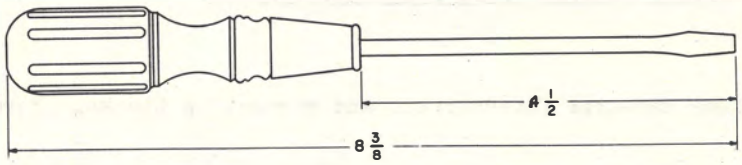

TIP THICKNESS 0.019 INCH

221 Tool

See 221 Tool under SOCKET WRENCHES 3/16 INCH ACROSS FLATS.

221W Tool

See 221W Tool under SOCKET WRENCHES 3/16 INCH ACROSS FLATS.

X-75515

KS-6854 Screwdriver

A cabinet screwdriver that forms part of the 221 tool used in the maintenance of central office apparatus.

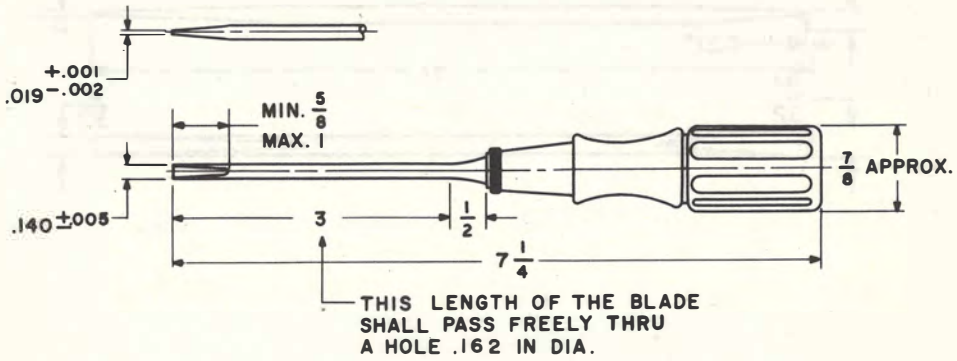

KS-14431 Screwdriver

A cabinet screwdriver used as a component part of the 221W tool in the maintenance of central office apparatus. It is the same as the KS-6854 tool except that it does not bear the "KS" number and the Bell System marking.

TIP THICKNESS 0.020 INCH

48 Tool

See 48 Tool under SOCKET WRENCHES 7/32 INCH ACROSS FLATS.

72 Tool

See 72 Tool under SOCKET WRENCHES 5/32 INCH ACROSS FLATS.

147 Tool

Used on reciprocating bar-type interrupters and connecting blocks. Forms part of the 72 tool.

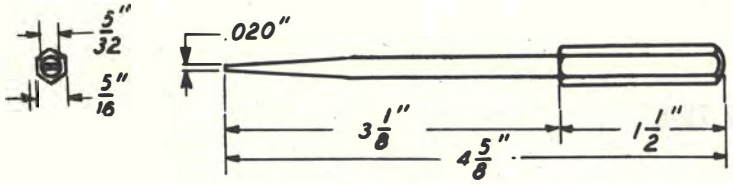

TIP THICKNESS 0.021 INCH

40 Tool

Double-end offset screwdriver used with drops. Also for general use.

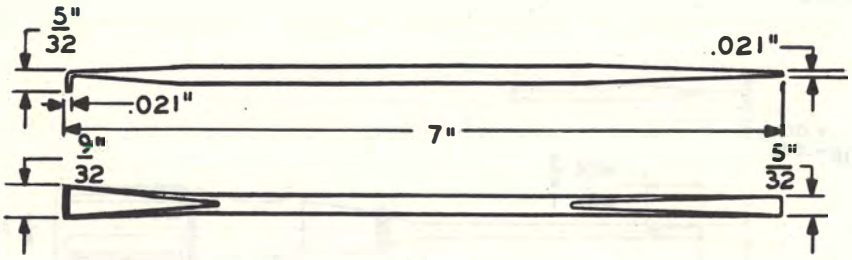

TIP THICKNESS 0.022 INCH

R-2739 Offset Screwdriver

Double-end offset screwdriver used for turning hinge screws of L-, N- and S-type relays.

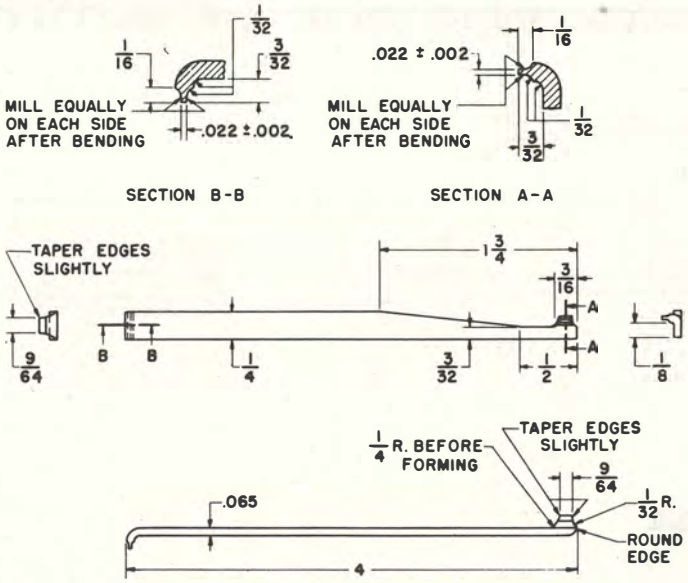

X-75515

TIP THICKNESS 0.025 INCH

610A Tool

A cylindrical metal shaft with a screwdriver end equipped with a removable handle of insulating material. Used in adjusting the channel gain on J68332C 4-wire voice frequency jack equipment.

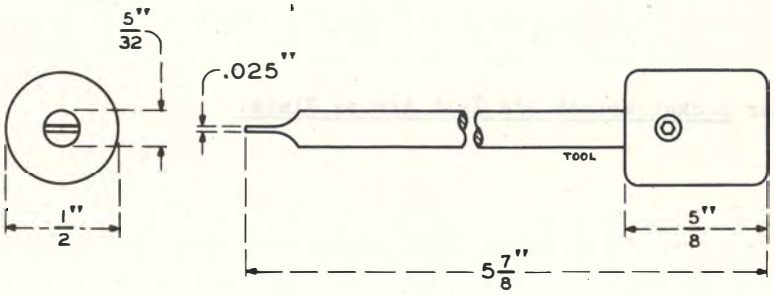

TIP THICKNESS 0.025 INCH

AT-6860 Cabinet Screwdriver

Used for light duty on the small screws used in apparatus assemblies.

DIMENSIONS

Size	A	B	C	D	Size of Screw
3-Inch	7-1/4 in.	3/16 in.	3/16 in.	0.025 ±0.002"	4 to 6

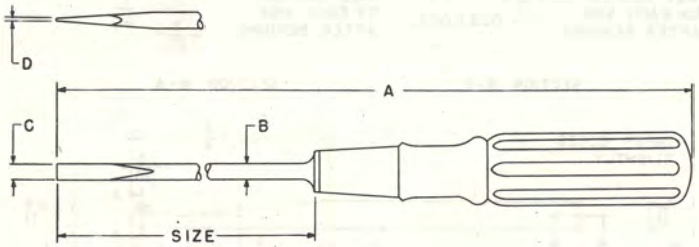

TIP THICKNESS 0.028 INCH

206 Tool

90-degree offset screwdriver used in adjusting the screws holding the springs on flat-type relays after the relays have been mounted.

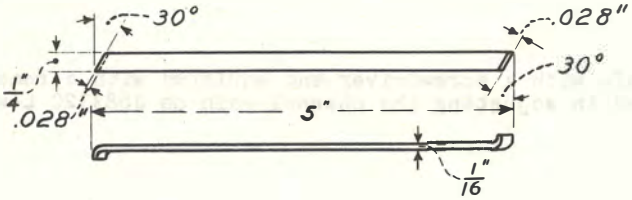

216B Tool

See 216B Tool under Socket Wrench 3/8 Inch Across Flats.

TIP THICKNESS 0.028 INCH

422A Tool

90-degree offset screwdriver used in the maintenance of 122-, 125-, and similar-type relays, 51-type dial testers, call announcer machines, and the stromberg time stamp.

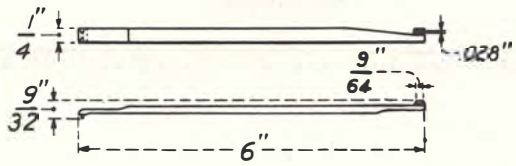

207 Tool

90-degree offset screwdriver used with the 206 tool for adjusting the screws holding the springs on flat-type relays after the relays have been mounted.

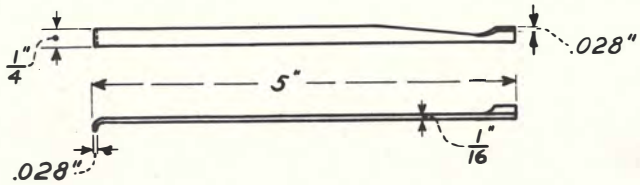

X-75515

423A Tool

45-degree offset screwdriver used on 122-, 125-, and similar-type relays, 51-type dial testers, call announcer machines, and the stromberg time stamp.

Reduce only to 45°

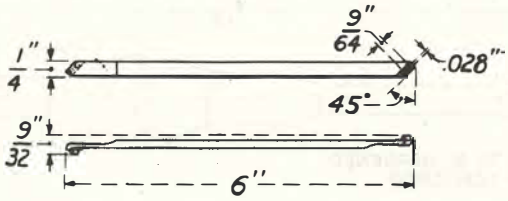

AT-6860 Cabinet Screwdriver

See AT-6860 Cabinet Screwdriver under TIP THICKNESS 0.025 INCH.
With the following dimensions:

DIMENSIONS

Size	A	B	C	D	Size of Screw
6 Inch	10-1/4 in.	3/16 in.	3/16 in.	0.028 ±0.002 in.	5 to 8

TIP THICKNESS 0.029 INCH

AT-6860 Cabinet Screwdriver

H-cabinet screwdriver used on intermediate range of screw sizes which otherwise would require a screwdriver of each type. Handle is protected with a leather tip.

DIMENSIONS

Size	A	B	C	D	Size of Screw
3 Inch	7 in.	1/4 in.	1/4 in.	0.029 ±0.002 in.	5 to 10

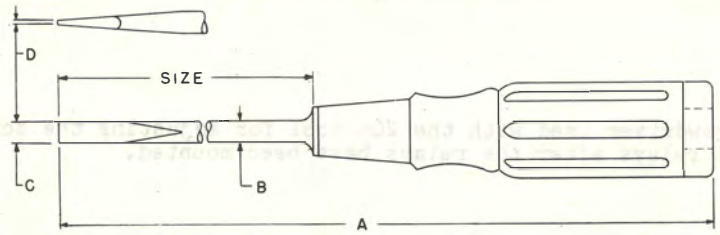

TIP THICKNESS 0.030 INCH

R-6770 3-inch Slotted Screwdriver

Screwdriver with blade slotted. Used for removing screws in guide combs on multiple banks.

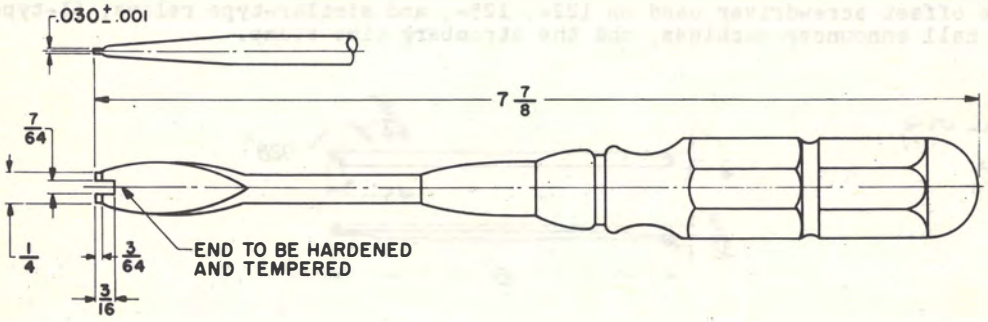

TIP THICKNESS 0.030 INCH

R-80200 Screwdriver

Screwdriver with wooden file handle used for tightening clamping screws on 3- and 4-type bearings and for miscellaneous use where a long screwdriver is required.

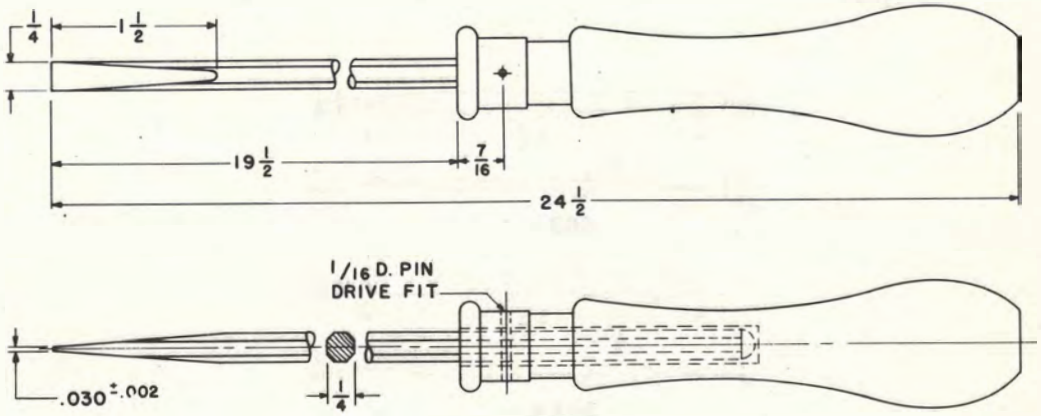

TIP THICKNESS 0.031 INCH

64 Tool

See 64 Tool under SPANNER WRENCHES

X-75515

84 Tool

See 84 Tool under SOCKET WRENCHES 7/16 INCH ACROSS FLATS.

96 Tool

Double-end offset screwdriver used on ringers

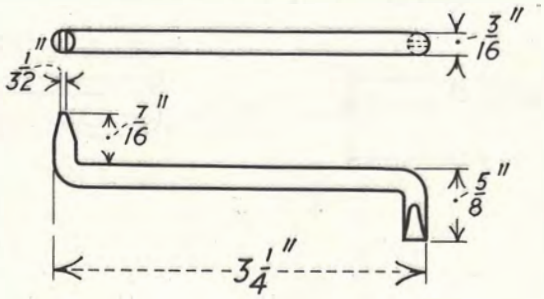

103 Tool

See 103 Tool under SPANNER WRENCHES

TIP THICKNESS 0.031 INCH

563A and 564A Tools

Offset screwdrivers used for general purposes.

Code No.	For Screw No.	Stamped at A	Offset
563A	6	6	90°
564A	6	6	45°

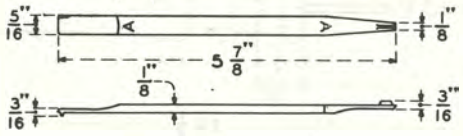

563 A

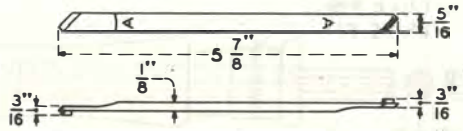

564 A

AT-6860 Regular Screwdriver

For general use on the larger wood and machine screws used in making plant attachments. Handle is protected with leather tip.

DIMENSIONS

Size	A	B	C	D	Size of Screw
4 Inch	9 in.	1/4 in.	1/4 in.	0.031 $\pm^{0.002in.}_{0.002in.}$	6 to 12

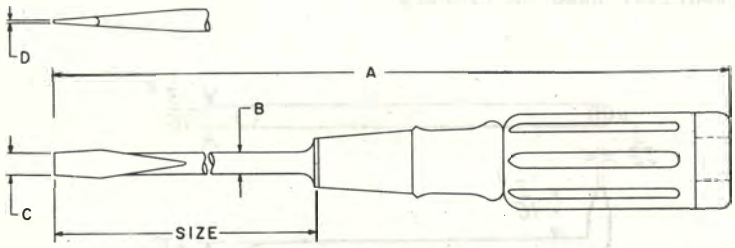

TIP THICKNESS 0.031 INCH

R-1632 Double-end Screwdriver

Used for turning sequence switch magnet mounting screws.

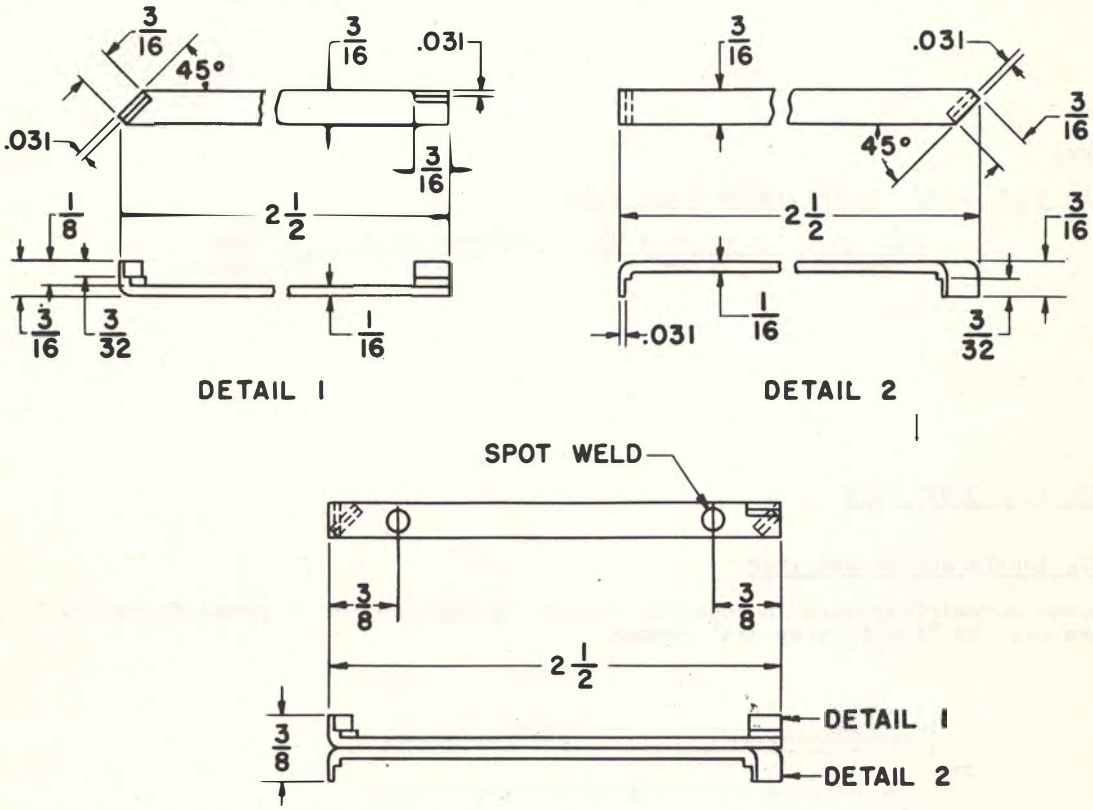

X-75515

TIP THICKNESS 0.033 INCH

KS-14336 Screwdriver

A short screwdriver used on the KS-13834 perforator.

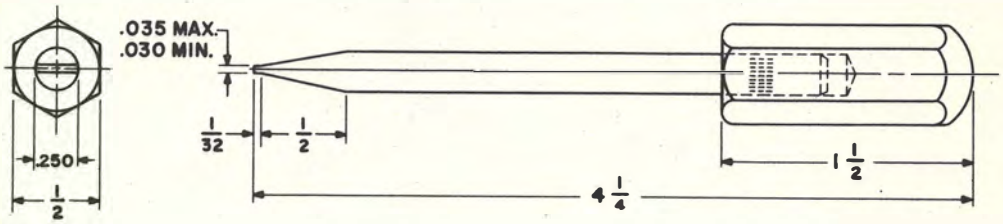

TIP THICKNESS 0.036 INCH

565A Tool

See 563A Tool under TIP THICKNESS 0.031 INCH.

Code No.	For Screw No.	Stamped at A	Offset
563A	8	8	90 degrees

566A Tool

See 564A Tool under TIP THICKNESS 0.031 INCH.

Code No.	For Screw No.	Stamped at A	Offset
564A	8	8	90 degrees

TIP THICKNESS 0.037 INCH

D-158524 Double-end Screwdriver

Double-end screwdriver used in connection with the replacement of phenol fibre insulators of banks used in step-by-step dial system.

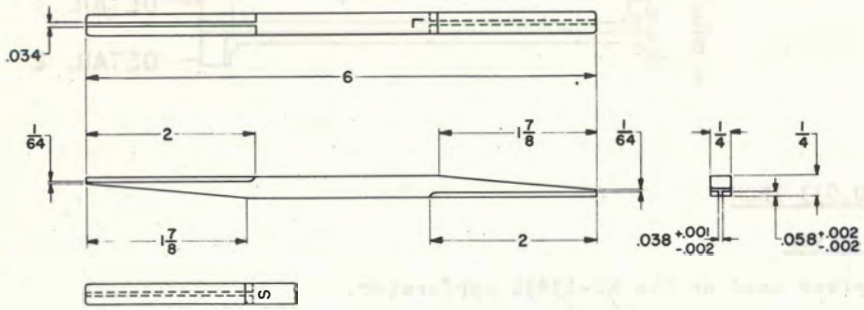

TIP THICKNESS 0.041 INCH

344 Tool

Offset screwdriver used on the magnet clamp screw on selectors in machine switching equipments.

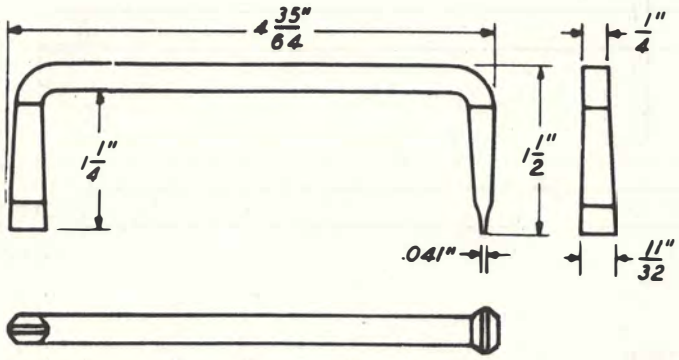

TIP THICKNESS 0.043 INCH

AT-6860 Regular Screwdriver

X-75515

See AT-6860 Regular Screwdriver under TIP THICKNESS 0.031 INCH with the following dimensions:

DIMENSIONS

Size	A	B	C	D	Size of Screw
5 Inch	11-1/2 in.	3/8 in.	7/16 in.	0.043 $^{+0.002}_{-0.005}$	14 to 18

TIP THICKNESS 0.044 INCH

269 Tool

A hollow-end screw driver used in mounting Stromberg Carlson relays.

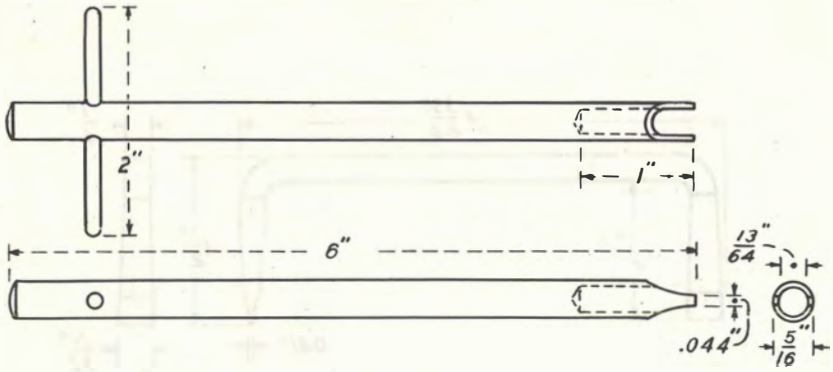

TIP THICKNESS 0.050 INCH

AT-6860 Double-grip Screwdriver

Double-grip screwdriver used on elevator apparatus and clutches in dial offices. It has a heavy square blade or a round blade with a square nut under the ferrule in order that a wrench may be applied to the blade for additional leverage.

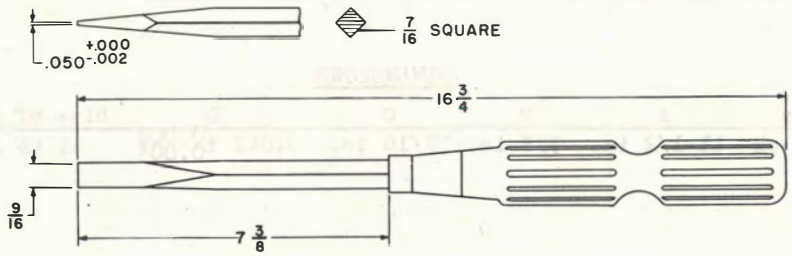

TIP THICKNESS 0.062 INCH

R-58442 T-handle Screwdriver

T-handle screwdriver with a piece of soft rubber tubing slipped over each end of the handle. Used on clutch mounting screws. Handle is cold drawn steel.

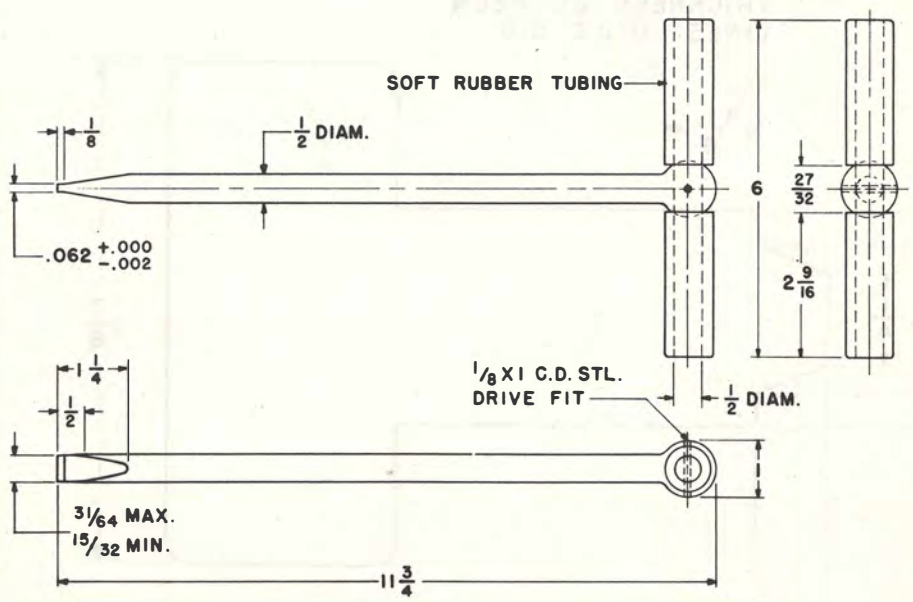

X-75515

TIP THICKNESS 0.072 INCH

R-8180 Thumb Screwdriver

Thumb screwdriver used for tightening screw bushing on friction roll drives.

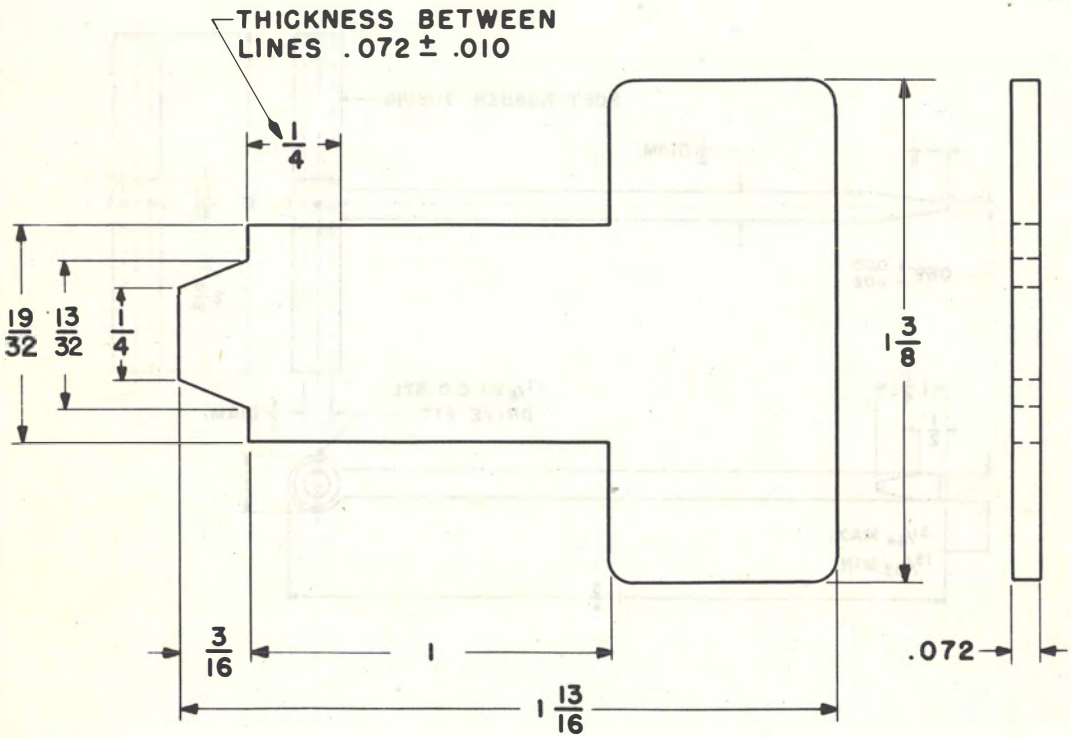

TIP THICKNESS 0.109 INCH

521A Tool

Offset screwdriver used for disassembling the two portions of the lower vertical shaft of friction roll drives.

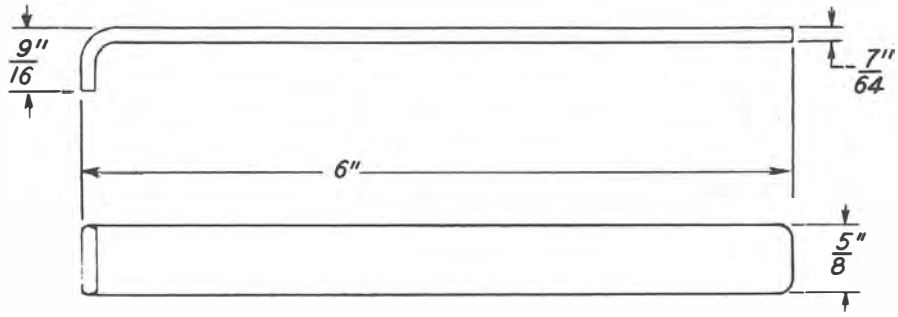

HEXAGONAL TIP 0.062 INCH

643A Tool

Screwdriver handle with an elongated shank having tip to fit Nos. 5 and 6 hexagonal socket-head screws. Used for field maintenance of KS-13882 perforators in AMA systems. A=0.062.

X-75515

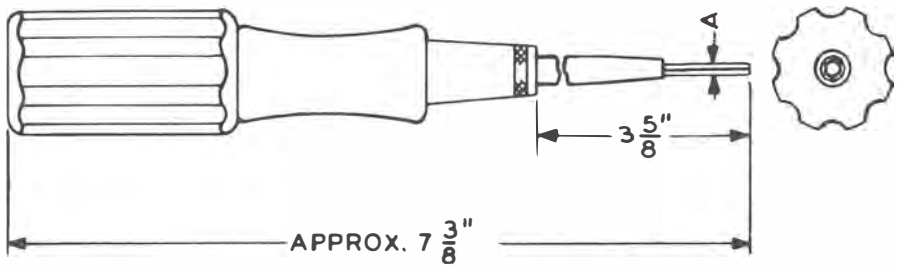

HEXAGONAL TIP 0.078 INCH

643B Tool

Screwdriver handle with an elongated shank having tip to fit No. 8 hexagonal socket-head screws. Used for field maintenance of KS-13882 perforators in AMA systems. A=0.078.

See 643A Tool under HEXAGONAL TIP 0.062 INCH.

136B Tool

Used as a cutover tool for holding the armature of flat-type relays in either the operated or unoperated positions.

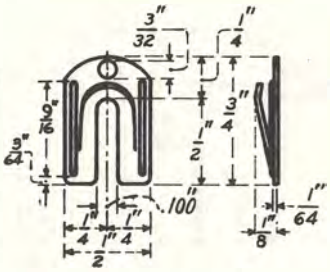

324 Tool

Used to hold armature of bridge cutover relays on line switches in step-by-step dial equipments in operated position for cutover and maintenance purposes.

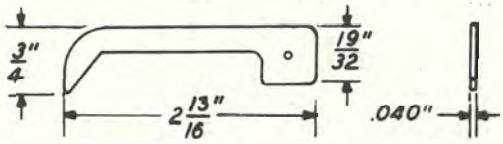

X-75515

338 Tool

A strip of insulating material used for opening the jack springs on line switchboards in step-by-step dial equipments for cutover purposes.

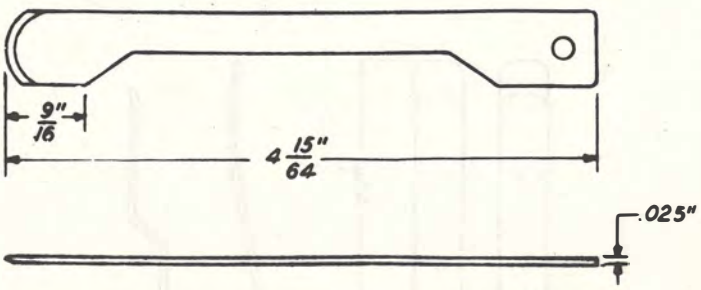

375A Tool

Used as a make-busy plug and trouble ticket holder in maintenance of connectors, selectors, line switches, and repeaters of step-by-step equipment.

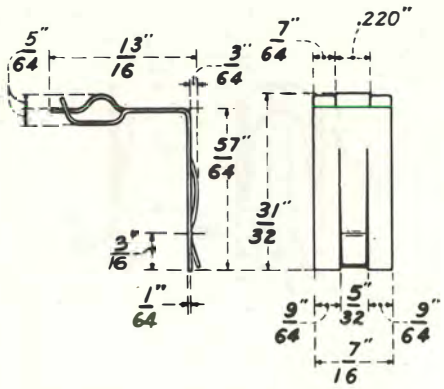

441A Tool

Used for cutover purposes in step-by-step office for holding open the contacts of R-type relays.

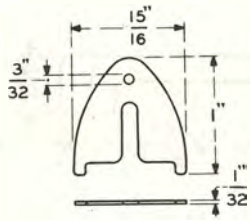

508A Tool

Used in blocking the armature of U- and Y- type relays in either the operated or unoperated positions.

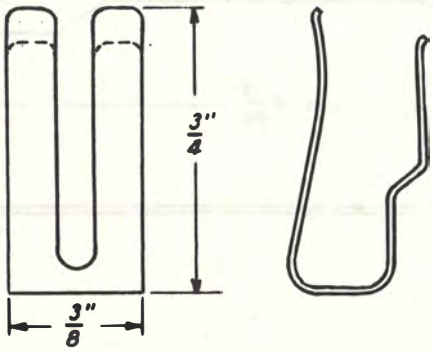

550B Tool

Used in holding open the off-normal springs of vertical units of crossbar switches while preparing the central office for cutover.

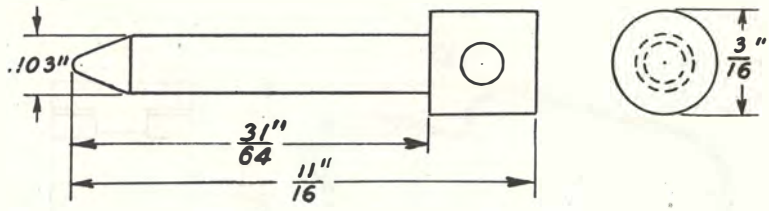

560A Tool

Used for grounding the outside stationary springs to the cover clamp of all types of multi-contact relays in crossbar dial systems.

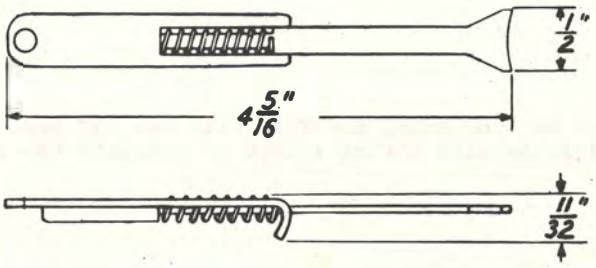

X-75515

608A Tool

Used as a cutover tool for holding contacts open on EA12 relays in step-by-step offices. Made of insulating material.

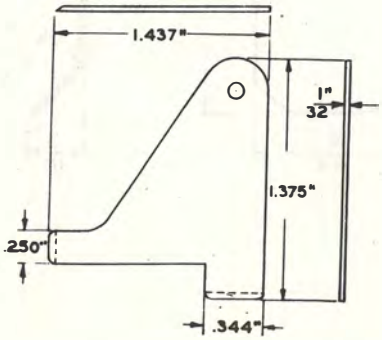

627A Tool

Used in blocking the armatures of wire spring relays in either "operated" or "unoperated" positions.

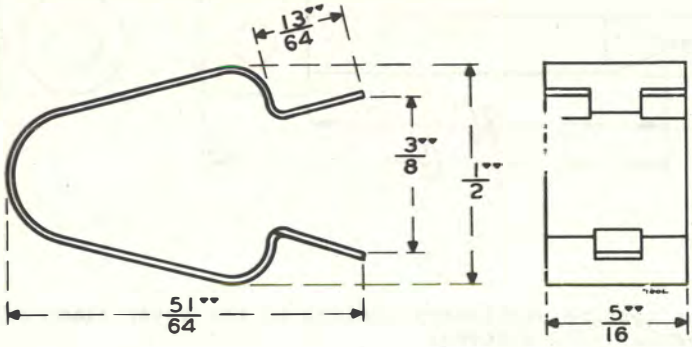

656A Tool

An irregular-shaped piece of insulating material with one end bent up at an angle of 45 degrees. Used in 12- position wire spring relays to insulate the contact springs during removal of the card.

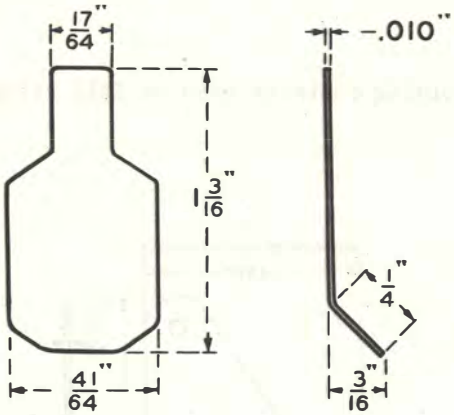

GENERAL PURPOSE TOOLS
SECTIONS 11-14

GENERAL PURPOSE TOOLS
SECTIONS 11-14

KS-8740 Soldering Copper

High efficiency, medium-weight soldering coppers, incorporating 75-, 95-, or 110-watt heaters, and operating on a line voltage of 115 ±10 per cent. They include a cord and plug assembly.

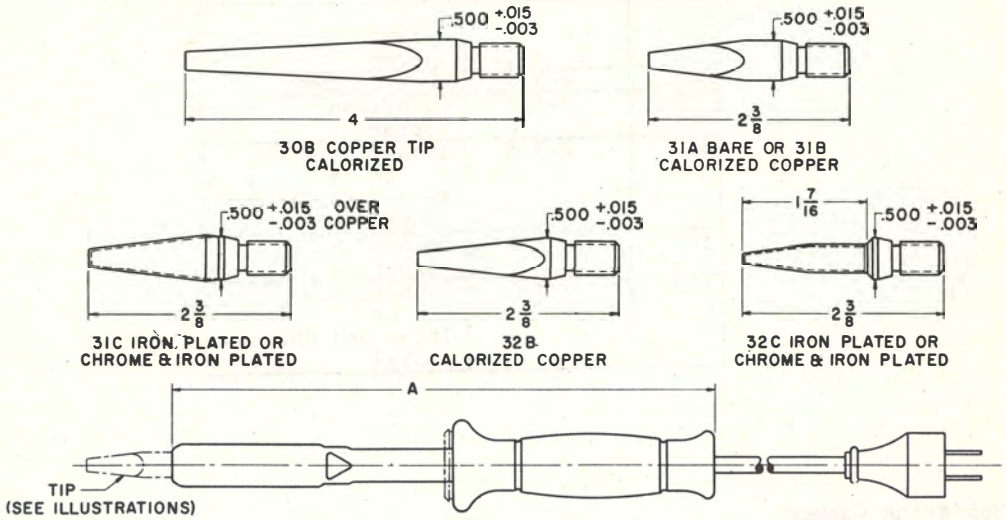

Lists 1, 2, 3, 4, 5, 6, 7, 8, 9, 10, 11, 21, and 22

X-75515

COMPLETE COPPERS, WITHOUT TIPS

List	Length	Heater Watts	Cord	Plug
1	10-15/16	95	20 ft	Radial Polarized
2	10-15/16	95	20 ft	Parallel nonpolarized
3	10-15/16	95	6 ft	Parallel nonpolarized
4	10-15/16	95	* 6 ft	3-Prong polarized
5	10-15/16	75	20 ft	Radial polarized
6	10-15/16	75	20 ft	Parallel nonpolarized
7	10-15/16	75	6 ft	Parallel nonpolarized
8	10-15/16	75	* 6 ft	3-Prong polarized
9	10-15/16	110	20 ft	Parallel nonpolarized
10	10-15/16	95	9 ft	Radial polarized
11	10-15/16	95	9 ft	Parallel nonpolarized
21	16-3/16	95	20 ft	Radial polarized
22	16-3/16	95	20 ft	Parallel nonpolarized

*Three conductor (One for ground)

KS-8740 Soldering Copper (Cont'd)

TIPS		
List	Length Including Thread	Material
30B	4	Calorized Copper
31A	2-3/8	Bare Copper
31B	2-3/8	Calorized Copper
31C	2-3/8	Iron-plated or Iron- and Chrome-plated
32B	2-3/8	Calorized Copper
32C	2-3/8	Iron-plated or Iron- and Chrome-plated

KS-14440 Soldering Copper

Quick heating, high efficiency, (60-watt) soldering coppers with iron- and chrome-plated copper tips. They are intended for applications where small size, light weight, and quick heating are desirable or where space limitations make use of the larger KS-8740 soldering copper impracticable. They operate on a line voltage of 120 ±10 per cent and include a cord and plug assembly.

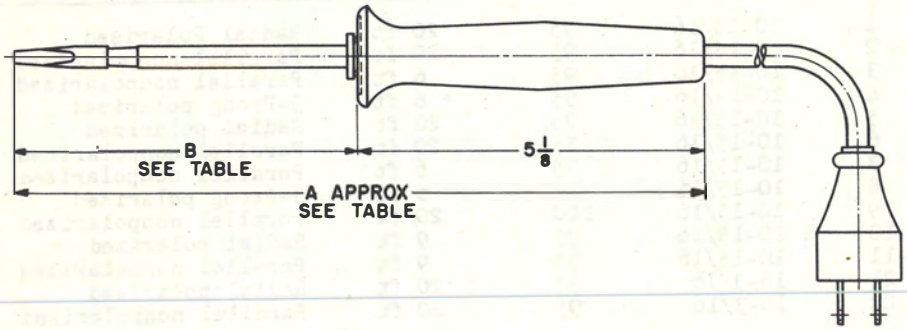

KS-14440 Soldering Copper (Cont.)

Lists 1, 2, 3, 4, 11, and 12

List Nos.	Length Dim A	Dim B	Cord	Plug Type
1	10-5/16	5-3/16	20 ft - 2 Conductor	Radial polarized
2	10-5/16	5-3/16	20 ft - 2 Conductor	Parallel
3	10-5/16	5-3/16	6 ft - 2 Conductor	Parallel
4	10-5/16	5-3/16	6 ft - 3 Conductor	3-prong polarized (One for ground)
11	22-11/16	17-9/16	20 ft - 2 Conductor	Radial polarized
12	22-11/16	17-9/16	20 ft - 2 Conductor	Parallel

KS-14582 Soldering Copper

Used where electric current is not available and an open flame is hazardous as in N1 carrier repeater maintenance operations. Heat is generated by an expendable heat unit KS-14768 (ordered separately). It is capable of furnishing soldering heat in approximately 20 seconds for a duration of 7 minutes.

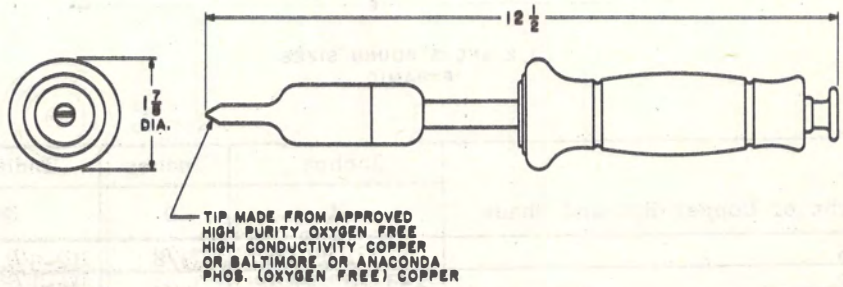

I-75515

AT-6722 Pyramid Soldering Coppers

These soldering coppers are for use where electric current supply is not available. They have a copper tip.

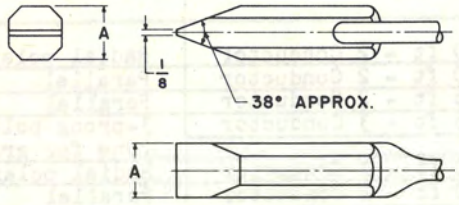

2 POUND SIZE
CHISEL

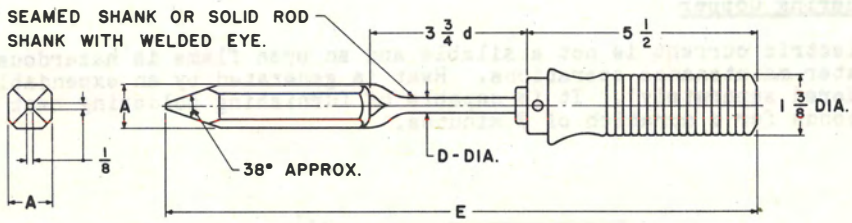

1, 2 AND 3 POUND SIZES
PYRAMID

Weight of Copper Bit and Shank	Inches A	Inches D	Inches E
1 lb	1 ±1/16	3/8	12-3/4 ±3/4
2 lb	1-3/16 ±1/16	7/8	14-1/8 ±3/4
3 lb	1-3/8 ±1/16		14-7/8 ±3/4

AT-7043 B Electrode Welder

B electrode welder. This welder has a 1/2-diameter carbon electrode, electroplated with copper 0.001-inch thick. The welder is arranged for connecting to an automobile-type storage battery and to the sheath of a cable for the purpose of making repairs to the sheath. The battery wires are rubber-insulated and are 32 and 28 feet long, respectively.

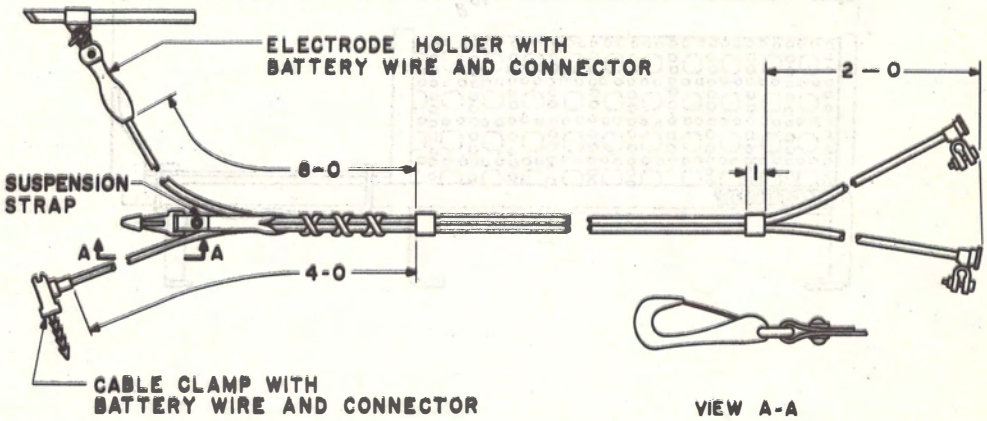

149 Tool

Used in holding wires to jack terminals while soldering.

X-75515

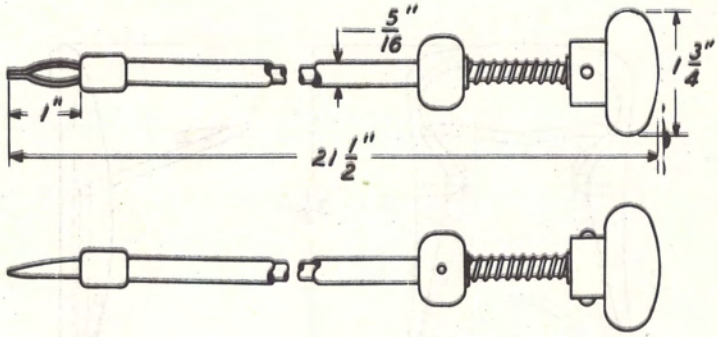

504A Tool

This is a holder for use with a soldering copper. It may be used with the KS-8740 or KS-14440 soldering coppers.

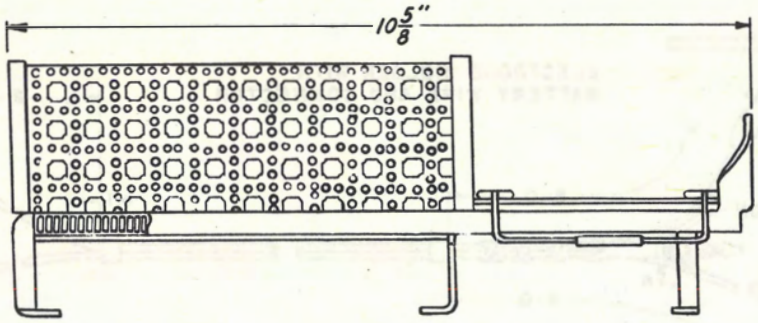

KS-8526 Tool

Folding soldering copper rest, for supporting the heated end of a soldering copper.

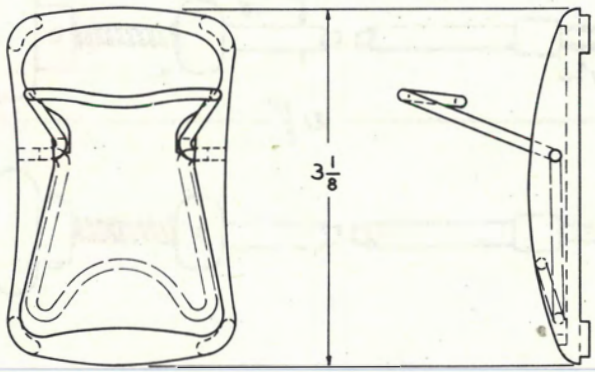

R-2392 Soldering Clip

Used for clamping wires on terminal strips while connecting and soldering.

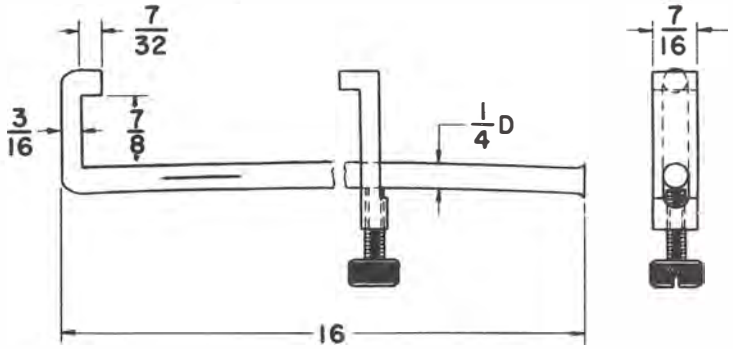

X-75515

262 Tool

Used with a connecting cord as a test pick to test over tip terminals connected to line switch brushes in dial equipments.

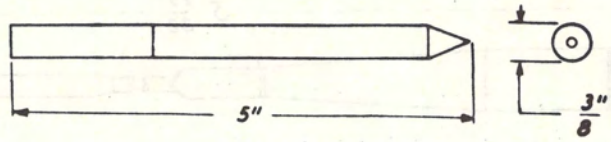

298 Tool

Used as a test pick. Equipped with a connecting cord. Handle is made of insulating material.

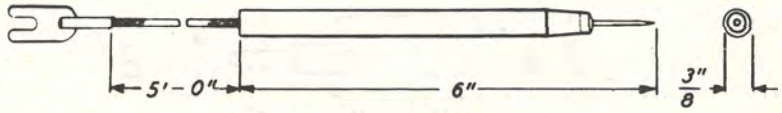

342 Tool

Used in testing the line relays on Automatic Electric Company's line switches in step-by-step central office equipment. Handle is hollow and made of insulating material. One end has a metal tip, the other is provided with a 750-ohm resistance connected to two contact terminals.

X-75515

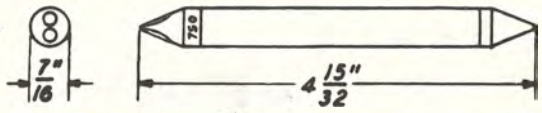

360A, 360B, and 360C

Socket-type cord tips used for test purposes in connection with 357, 361B, 364, 365, 419A, 547A, 548A, and other tools provided with pin terminals. 360A is red, 360B is black, and 360C is white.

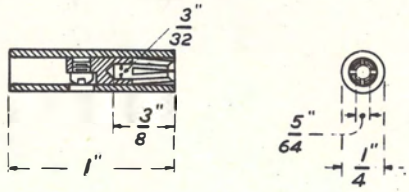

361B Tool

Used in conjunction with a 360-type tool for test purposes on E-, R- and similar-type relays.

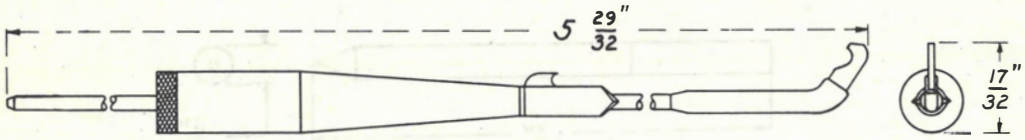

364 Tool

Used in conjunction with a 360-type tool for general test purposes.

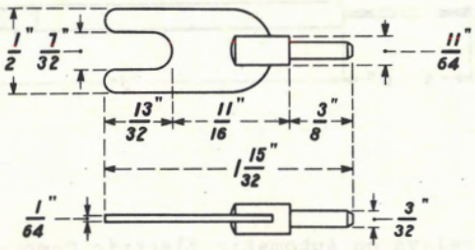

365 Tool

A connecting clip used in conjunction with a 360-type tool for general test purposes.

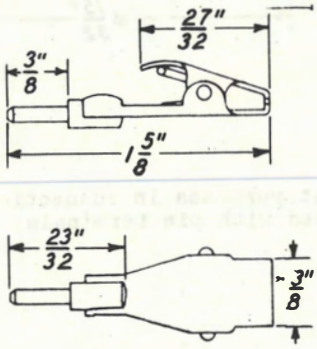

387A Tool

Used in establishing test connections to the inner contact springs of the relays.

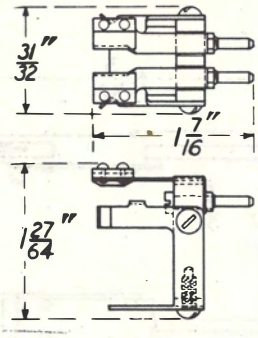

411A and 411B Tool

The 411A tool is an adjustable test pick having a handle of insulating material. This test pick may be connected to an 893 cord by means of a 360-type tool. The 411B tool is the same as the 411A except that at the chuck end the handle is covered with insulating tubing which insulates a metal ring around the handle.

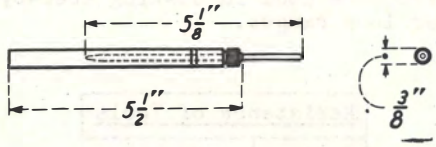

X-75515

419A Tool

Used in conjunction with the 360-type tools for making test connections to A- and B-type sequence switches, 157-type interrupters, and relays.

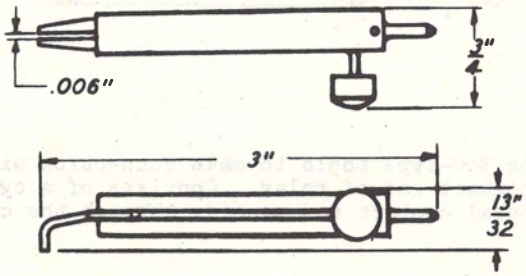

428A Tool

Used in making test connection from the front of the relay on 89-, 101-, 105-, 108-, 122-, 149-, 162-, 172-, 178-, 190-, and 196-type relays.

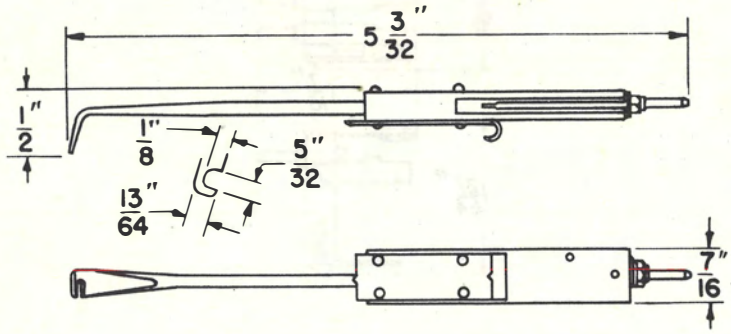

472A, 472B, and 472C Tools

Double-ended testing tools having hollow handles of insulating material. 472A is used in testing the line relays on Automatic Electric Company's line switches in central office dial equipment where it is found desirable to readjust the relay so as to provide a greater circuit margin against minimum battery voltage conditions than that permitted when using the 342 tool. 472B and 472C are used in testing step-by-step primary line switches arranged for extended subscriber loop ranges.

Resistance of Tools	
472A	1100 ohms
472B	1300 ohms
472C	1650 ohms

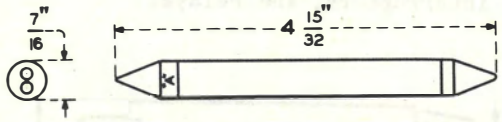

509A Tool

Used in conjunction with the 360-type tools to make connection with winding terminals of U- and Y-type relays from contact end of relay. Consists of a cylindrical handle of insulating material and a metal contact rod passing through the center.

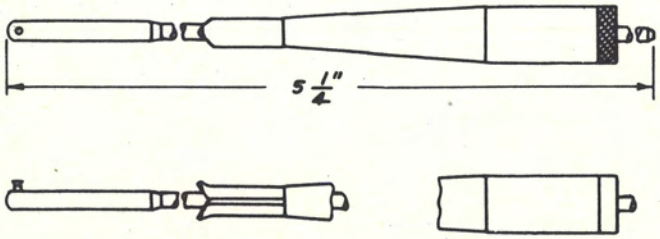

513A Tool

Consists of a fibre tube with a metal point. Used in toll cable testing.

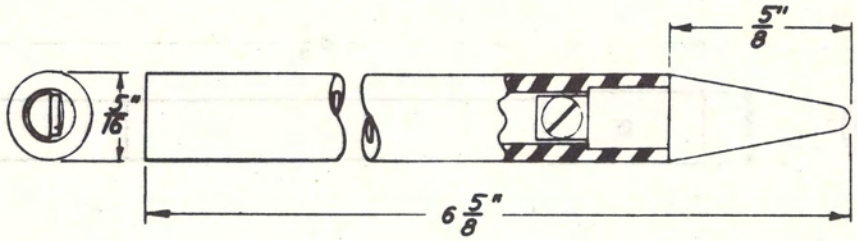

518A Tool

An adjustable test pick having a handle of insulating material in which are assembled a 360A tool, terminals, switch, and chuck. Used with the 67-type test set.

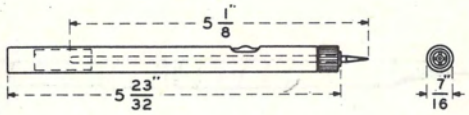

547A Tool

X-75515

Used in conjunction with the 360-type tool for making test connections on the selecting magnets on crossbar switches, timers, and multicontact relays. Handle is insulated.

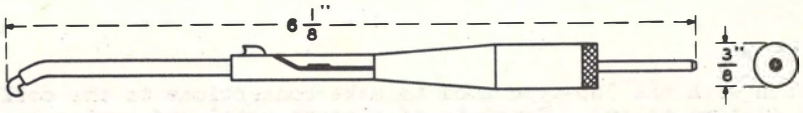

548A Tool

Used in conjunction with the 360-type tool in making test connections on holding magnets on crossbar switches. Handle is insulated.

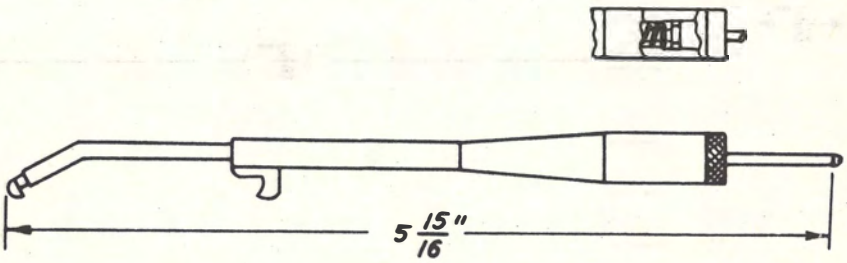

572A Tool

Used with a W2CD cord and a 347B plug as a probe for identifying working wires in cables. Consists of a small coil on a permalloy core potted in a shell of insulating material and attached to a metal body which is covered with an insulating shell. Forms part of the 71A test set.

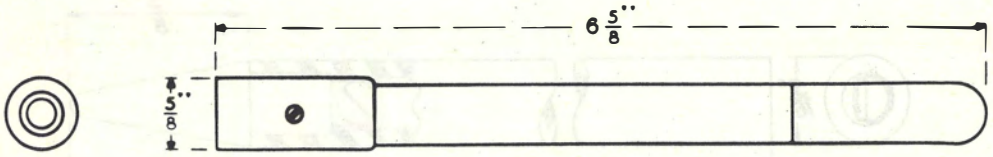

607A Tool

Used as a connector in observing the electrical performance of U-, Y-, UA-, and UB-type relays. Consists of a metal rod, the center portion of which is covered with an insulating sleeve. One end is hook-shaped to engage the winding terminal of the relay. The other end is arranged to fit a 360-type tool.

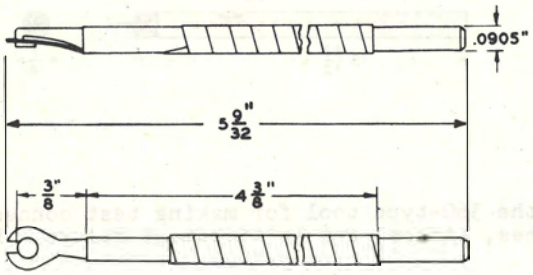

624A Tool

Used in conjunction with the 360-type tool to make connections to the coil winding terminals of AF-, AG-, and AJ-type relays. Consists of a round metal rod having one end slotted while the other end is solid with a pin point.

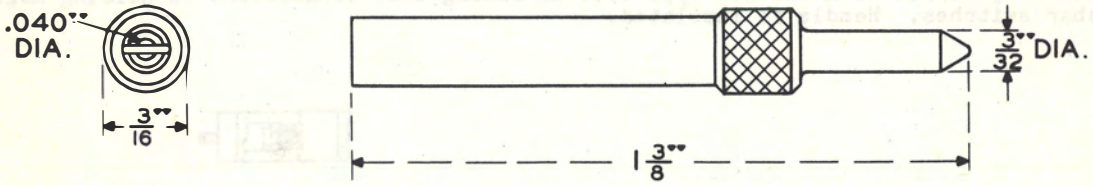

639A Tool

Used in connection with 360-type tool to make connections to the fixed contacts of AF-, AG-, and AJ-type wire spring relays. Consists of a round metal tube with a pin-point spring actuated plunger in one end and a pin plug in the other end.

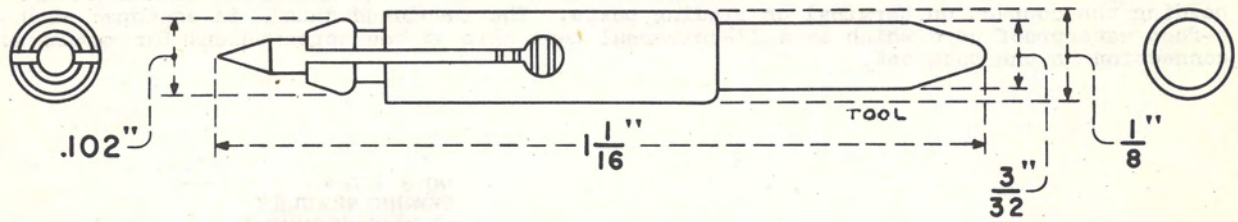

KS-6278 Connecting Clip

Used in conjunction with the 360-type tool in establishing test connections to miscellaneous terminals. Consists of two jaws and a coil spring tensioned to hold the serrated edges of the jaws together.

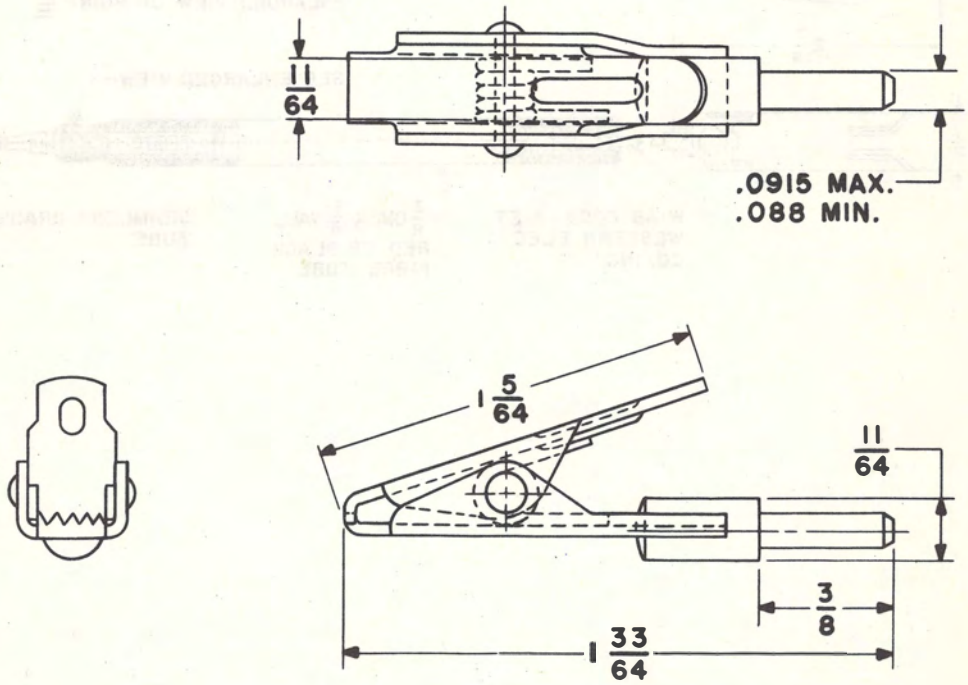

X-75515

AT-6491 Needle Point Test Pick

Used in identifying cable conductors in splices and at cable terminals particularly of the fused type. The tool proper consists of two metal details, one of which is fiber insulated and is connected to the point by means of a screw joint. The point terminates in a group of sewing needles soldered in place for contacting the cable conductors through the insulation. Reversing the point exposes a conical tip for making contact with fuses or binding posts. The threads adjacent to the conical tip permit making a holding contact with the fuse clips for 7A fuses. The internal threads in the end of the insulated detail permit holding the contact on terminal or binding posts. The insulated detail is equipped with a 6-foot waterproof cord which as a 27-universal test clip at the opposite end for making the connection to the test set.

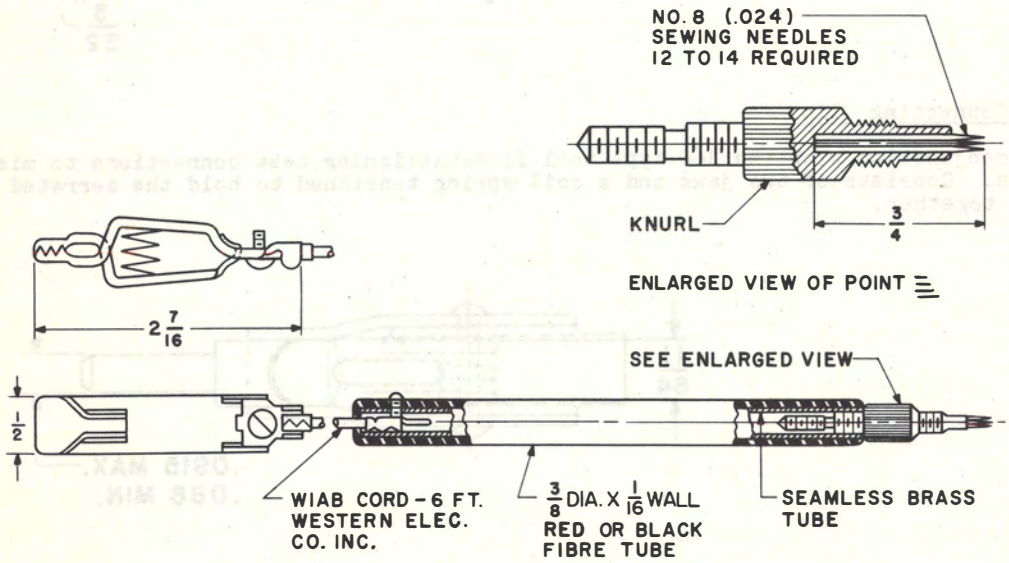

AT-6869 Cable Transfer Clips

Cable transfer clips used in making contacts with insulated conductors in cable splicing and testing operations. They are furnished in two types, one designated B for use on 22 gauge and smaller conductors and the other designated C for 19 gauge and larger conductors. Each clip consists of a 6-foot waterproof cord equipped at one end with a 27-universal test clip for attachment to the test set and at the other with a contact clip having a group of sharpened pins for contacting cable conductors through the insulation. The contact clip is a modified 27-universal test clip with the serrated jaws removed and a brass cup, in which heat-treated steel pins are soldered, secured to one jaw. The C clip differs from the B in having a fewer number of larger and longer pins arranged in a ring instead of a full circle and in having a stronger spring.

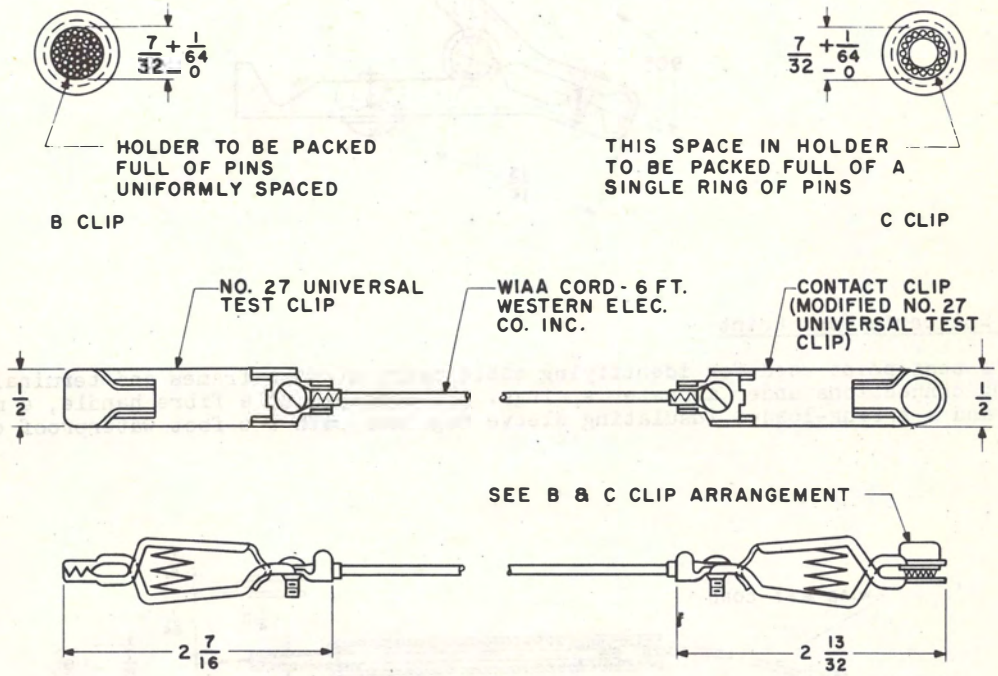

CONTACT CLIP PIN ARRANGEMENT

X-75515

AT-6928 Test Clip

Test clips used in making electrical connections with insulated wire or with terminal lugs, binding posts, etc. One jaw of the No. 1 test clip carries a pin for piercing insulation while the other jaw is equipped with notches for centering the wire on the pin and a hole to accommodate the point of the pin when the jaws are closed. The No. 2 test clip does not have the pin.

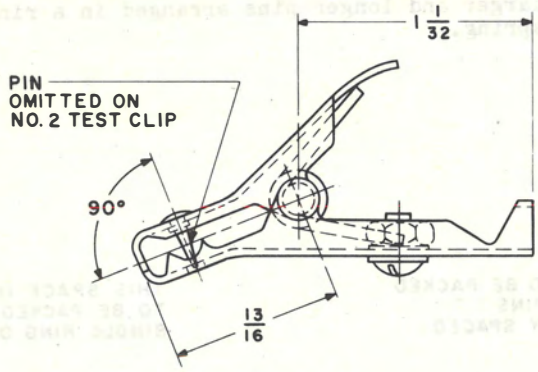

AT-7472 B Splicer's Test Point

B splicer's test point used for identifying cable pairs at main frames and terminals and for holding connections under arrester springs. It consists of a fibre handle, a metal contact rod, and a spring-loaded insulating sleeve together with a 6-foot waterproof cord and test clip.

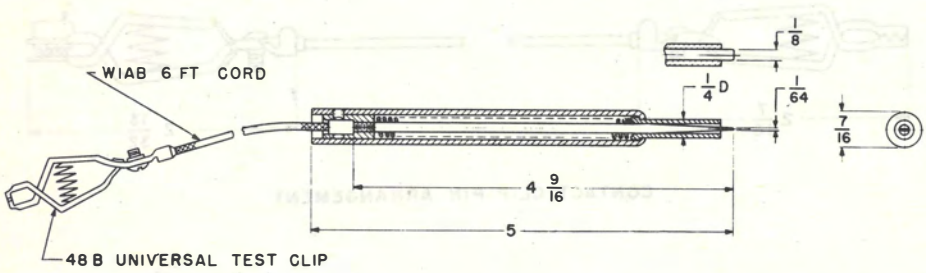

3/16 INCH ACROSS FLATS

243 Tool

Double-end hexagonal flat wrench for adjusting indicator wheel pointer and armature air gap of 206-type selectors used in panel machine switching equipments. Cotton sleeving on handle.

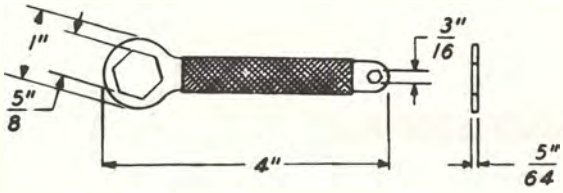

349 Tool

Double-end hexagonal closed offset wrench used for adjusting nuts on E-type relays and 22-type drops.

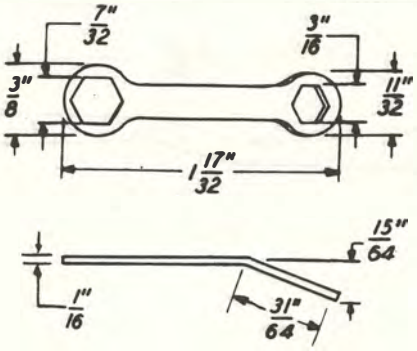

X-75515

474A Tool

Double-end closed hexagonal offset wrench used on 50A drives and 218-type relays.

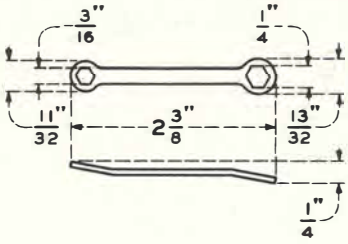

7/32 INCH ACROSS FLATS

349 Tool

See 349 Tool under 3/16 INCH ACROSS FLATS.

1/4 INCH ACROSS FLATS

474A Tool

See 474A Tool under 3/16 INCH ACROSS FLATS.

541A Tool

12-point double-end box wrench for use on 263- and 264-type relays.

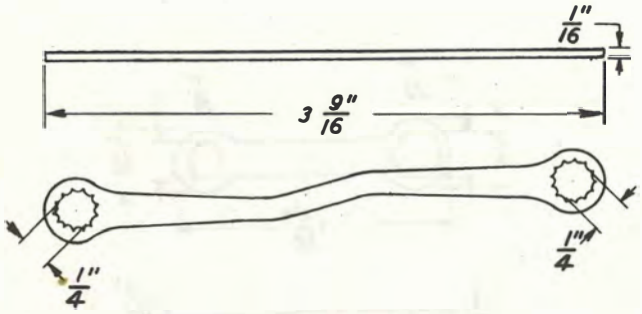

568A Tool

12-point offset box wrench for use on the armature retaining spring screws of 263- and 264-type relays in crossbar dial systems. Cotton sleeving and insulating coating on handle.

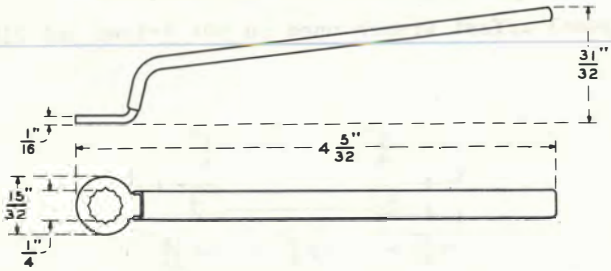

7/16 INCH ACROSS FLATS

KS-8097 Box Wrench

Double-end offset box wrench used for removing and replacing the drain plugs on friction roll drives for panel dial systems. Chromium flash finish. 12-point wrench.

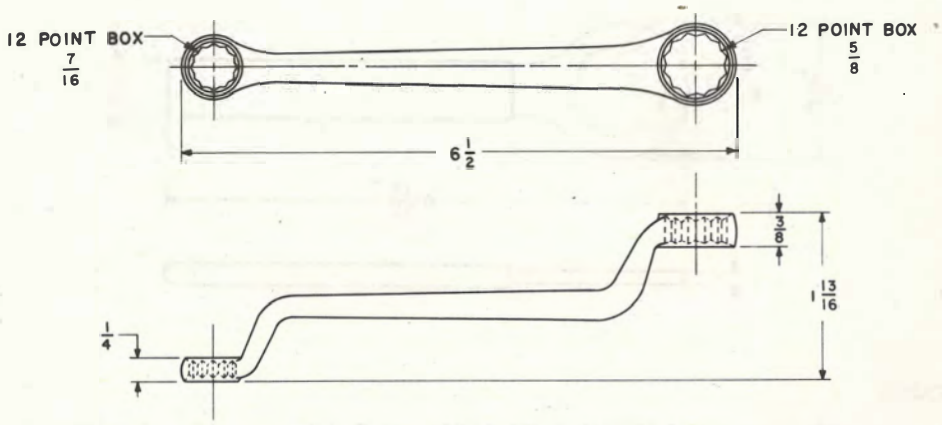

X-75515

KS-14335 Wrench

Offset open box wrench used for adjusting KS-13834 perforators.

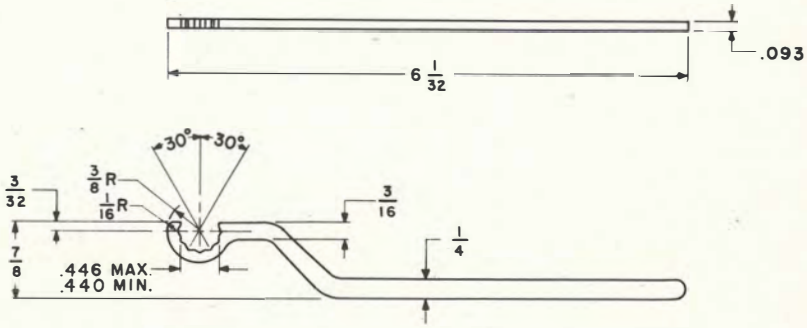

5/8 INCH ACROSS FLATS

KS-8097 Box Wrench

See KS-8097 Box Wrench under 7/16 INCH ACROSS FLATS.

3/4 INCH ACROSS FLATS

573A Tool

Box wrench for use on the magnet adjusting locknut of the 209A selector. Cotton sleeving and insulating coating on handle.

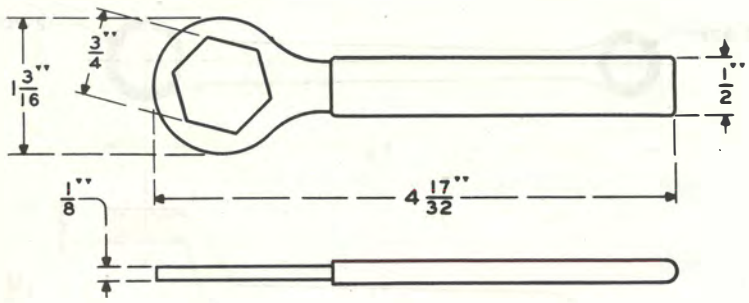

KS-14334 Wrench

Hexagonal box wrench used for adjusting KS-13834 perforators. 12-point wrench.

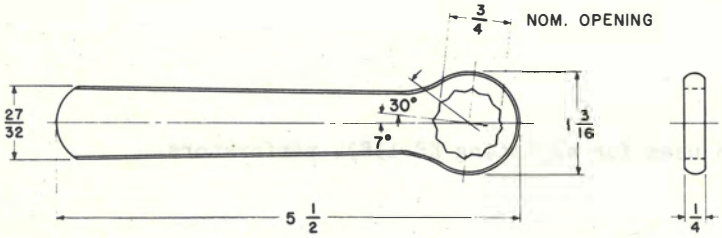

3/16 INCH ACROSS FLATS

388 Tool

Double-end hexagonal offset wrench used in adjusting the contact stud of 196-type relays.

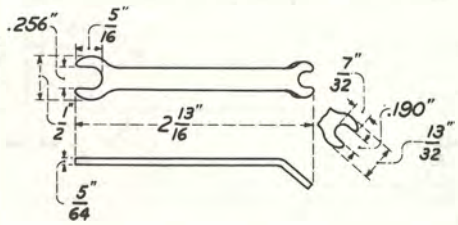

7/32 INCH ACROSS FLATS

74 Tool

See 74 Tool under 5/32 INCH ACROSS FLATS

418A Tool

X-75515

Double-end hexagonal open flat wrench for general use such as in panel and step-by-step dial systems.

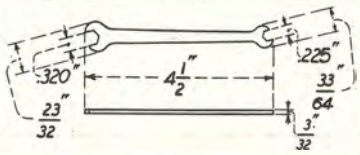

R-2262 Open-end Wrench

See R-2262 Open-end Wrench under 5/32 INCH ACROSS FLATS

1/4 INCH ACROSS FLATS

43 Tool

See 43 Tool under 3/16 INCH ACROSS FLATS.

3/32 INCH ACROSS FLATS

368 Tool

Used on the 51 dial testers in adjusting the setscrews of the pendulum balancing weight.

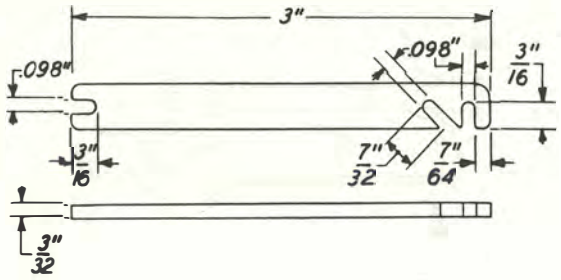

5/32 INCH ACROSS FLATS

74 Tool

Hexagonal open double-end wrench for general use. Nickel finish.

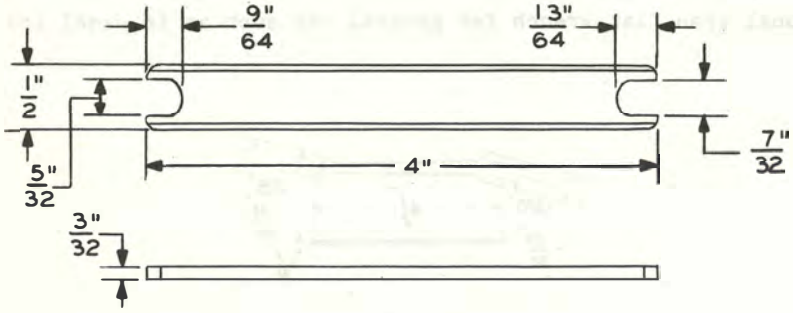

5/32 INCH ACROSS FLATS

R-2262 Open Flat Wrench

Double-end open flat wrench used for turning the armature adjusting screw locknuts on 5-type traffic registers and one-type electric clocks.

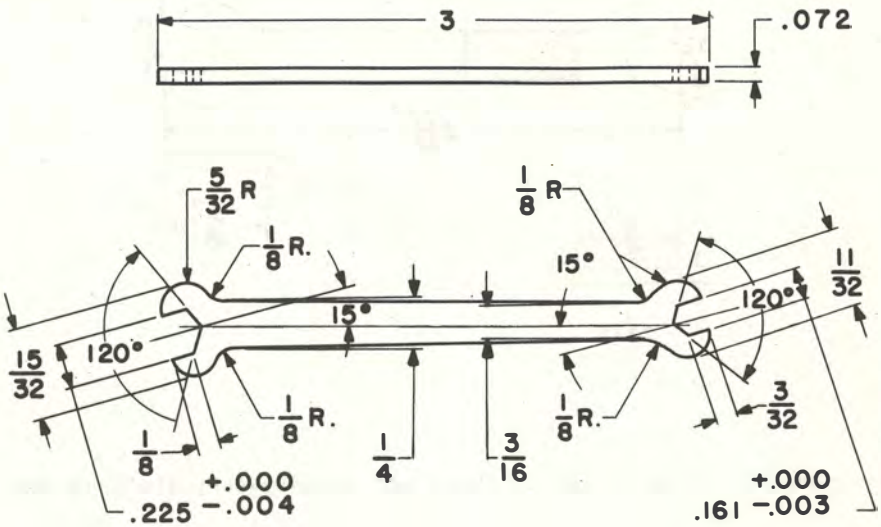

X-75515

3/16 INCH ACROSS FLATS

43 Tool

Hexagonal open double-end flat wrench for general use. Nickel finish.

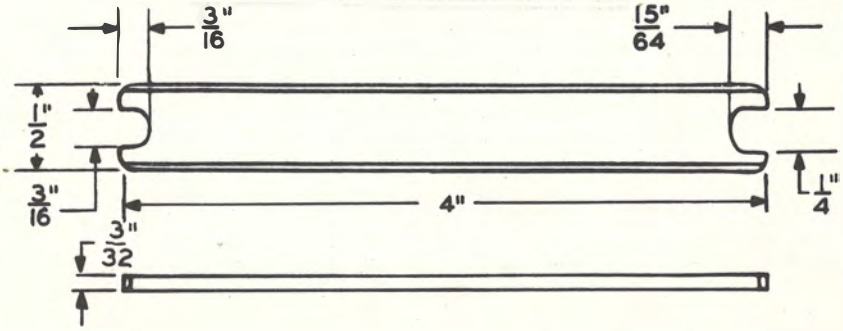

1/4 INCH ACROSS FLATS

129B Tool

Hexagonal open double-end offset wrench used in adjusting nuts of armature pivot screws, armature stop screws, adjusting posts, and biasing spring studs on ringers in subscriber sets.

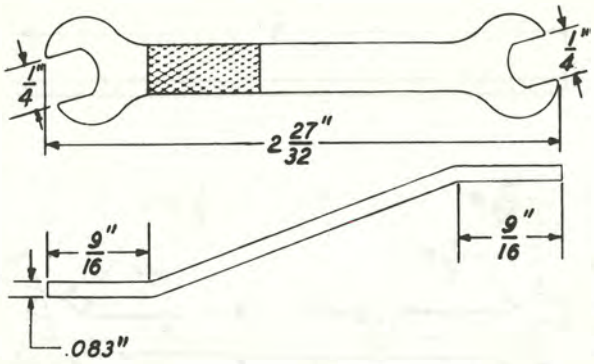

417A Tool

Double-end hexagonal flat wrench used in panel and step-by-step dial systems.

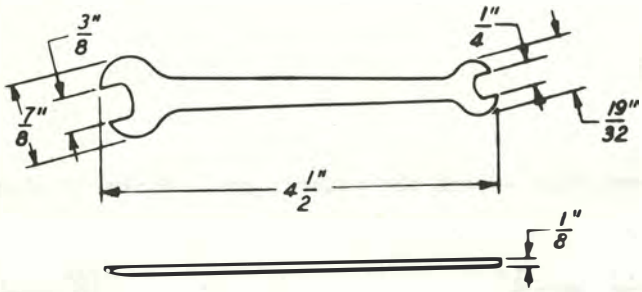

1/4 INCH ACROSS FLATS

539A Tool

Double-end hexagonal open wrench used on pivot screws and nuts of selecting bars.

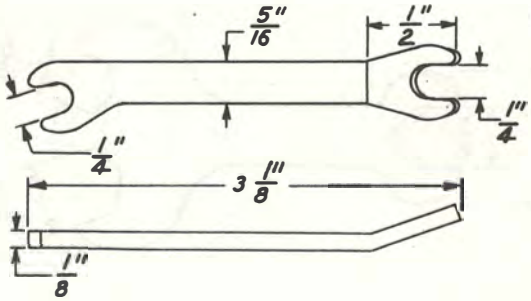

388A Tool

See 388A Tool under 3/16 INCH ACROSS FLATS.

9/32 INCH ACROSS FLATS

X-75515

310B Tool

Double-end hexagonal offset wrench for general use such as on armature spring tension adjusting nut and armature setscrew of clutches.

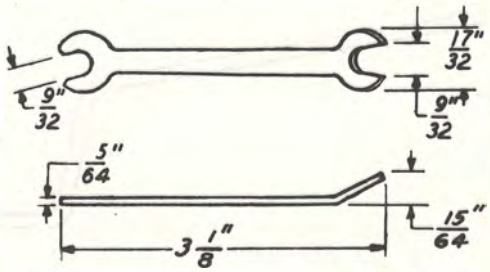

5/16 INCH ACROSS FLATS

63 Tool

Hexagonal open-end triple wrench for use on General Electric Company voltage regulators. Used also on nuts of binding posts of receivers and transmitters.

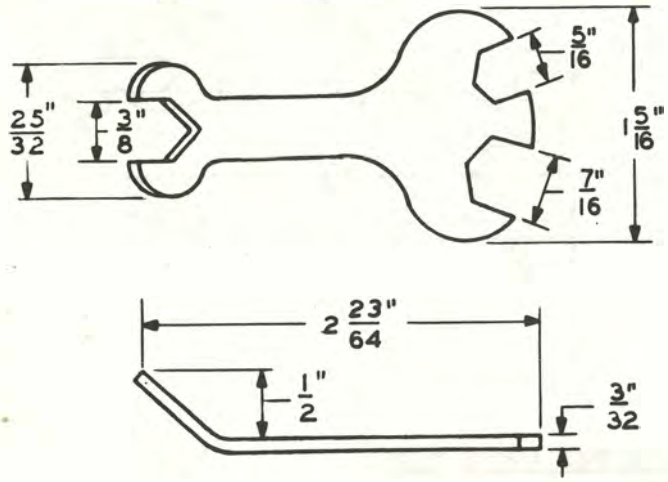

209 Tool

Hexagonal offset wrench used for engaging the check nuts under key buttons on mechanical switching keys. Thickness of wrench 0.095 inch.

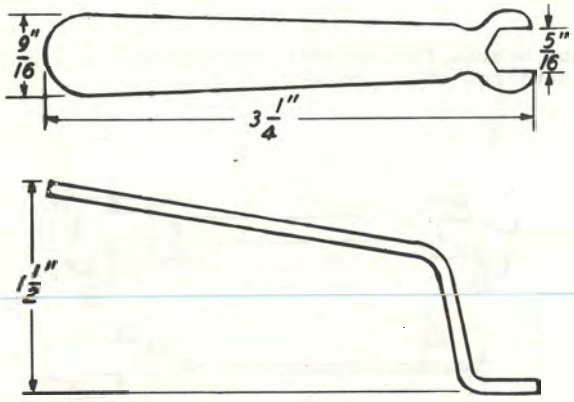

418A Tool

See 418A Tool under 7/32 INCH ACROSS FLATS.

3/8 INCH ACROSS FLATS

245 Tool

Double-end hexagonal open flat wrench for general use such as adjusting mounting screws and check nuts of leveling screws of multiple banks.

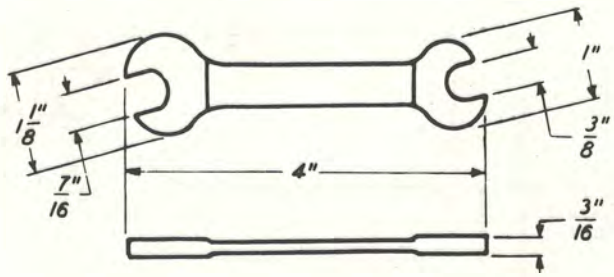

372 Tool

Used in adjusting the air gap of 177-type relays where adjacent apparatus interferes with the use of an ordinary flat wrench.

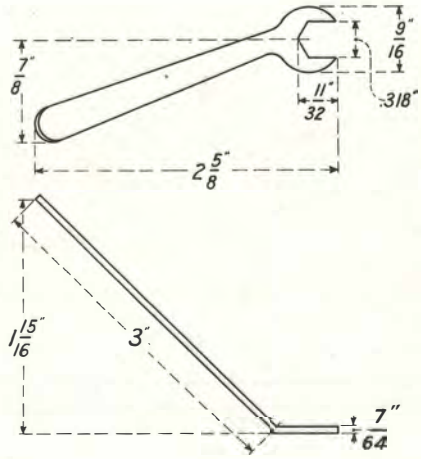

X-75515

417A Tool

See 417A Tool under 1/4 INCH ACROSS FLATS.

7/16 INCH ACROSS FLATS

63 Tool

See 63 Tool under 5/16 INCH ACROSS FLATS.

7/16 INCH ACROSS FLATS

122 Tool

Hexagonal single-end wrench used for adjusting the air gap between armature and core on harmonic ringers.

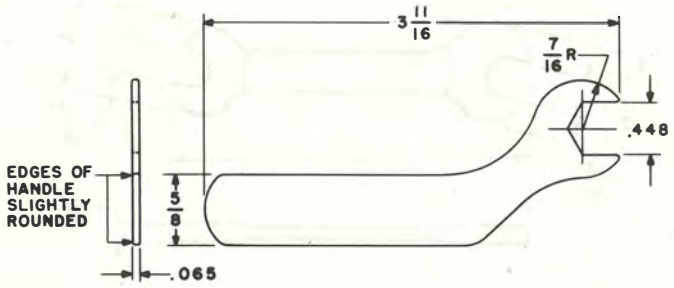

KS-6367 Wrench

Double-end S wrench used for the filling and drain plugs of drives for panel dial systems. Black finish.

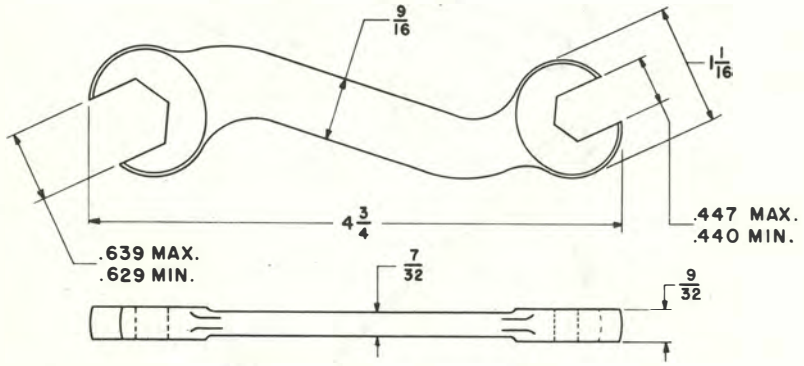

245 Tool

See 245 Tool under 3/8 INCH ACROSS FLATS.

1/2 INCH ACROSS FLATS

246 Tool

Hexagonal open flat wrench for general use such as adjusting the pivot screws in drives.

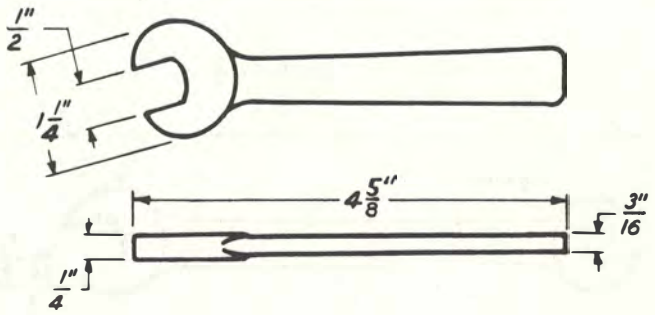

9/16 INCH ACROSS FLATS

236 Tool

Hexagonal open offset wrench used to adjust the cam clamping nut of sequence switches.

X-75515

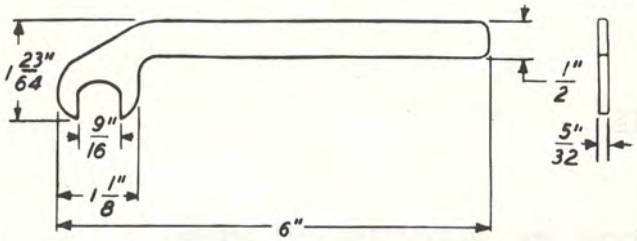

5/8 INCH ACROSS FLATS

KS-6367 Wrench

See KS-6367 Wrench under 7/16 INCH ACROSS FLATS.

5/8 INCH ACROSS FLATS

R-5850 Open-end, 5/8 to 3/4 inch

Double-end flat open offset wrench used for tightening multiple bank stud locknuts and for removing and replacing brass drain and filling plugs in friction roll drive gear case and bearing box.

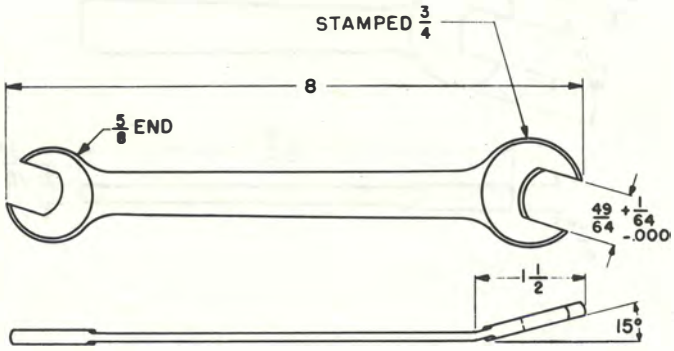

3/4 INCH ACROSS FLATS

R-5850 Open-end Wrench

See R-5850 Open-end Wrench under 5/8 INCH ACROSS FLATS.

13/16 INCH ACROSS FLATS

271 Tool

Hexagonal open flat wrench used on friction roll drives.

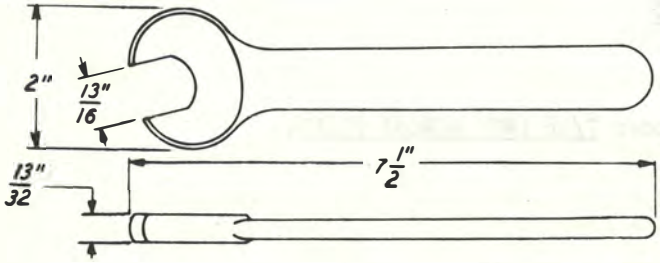

15/16 INCH ACROSS FLATS

KS-13816 Open-end Flat Wrench

Double-end flat open wrench used for adjusting output motor drive units in AMA systems. Also for use in tightening and loosening cam clamping nuts on the 168-, 170A-, and 171A-type interrupters in the panel dial system. Chromium plate.

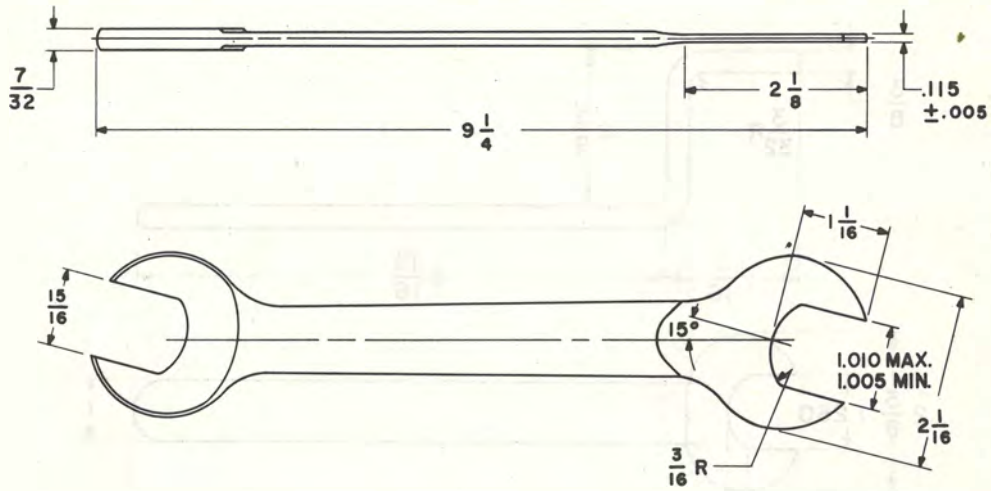

1 INCH ACROSS FLATS

X-75515

See KS-13816 Open-end Flat Wrench under 15/16 INCH ACROSS FLATS.

1-1/4 INCH ACROSS FLATS

No. 247 Tool

Hexagonal open flat wrench for use on friction roll drives, vertical drive shafts, and for gneral use in power equipment.

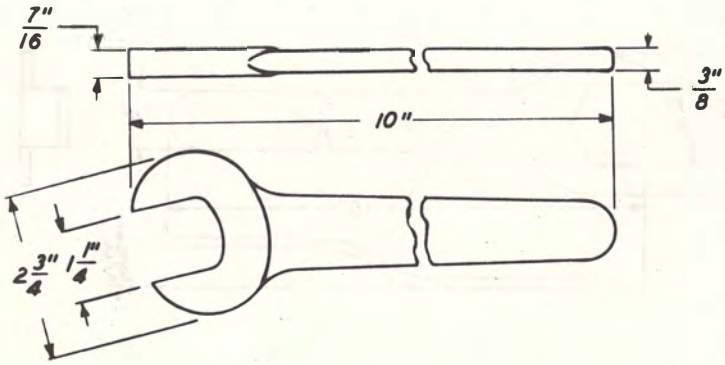

1-1/4 INCH ACROSS FLATS

R-2064 Open-end Offset Flat Wrench

Used on eccentric bushings and pivot screw locknuts of friction roll drives when adjusting the position of the cork rolls. Offset used when "Saftofuse" box and motor bracket interferes with use of straight wrenches.

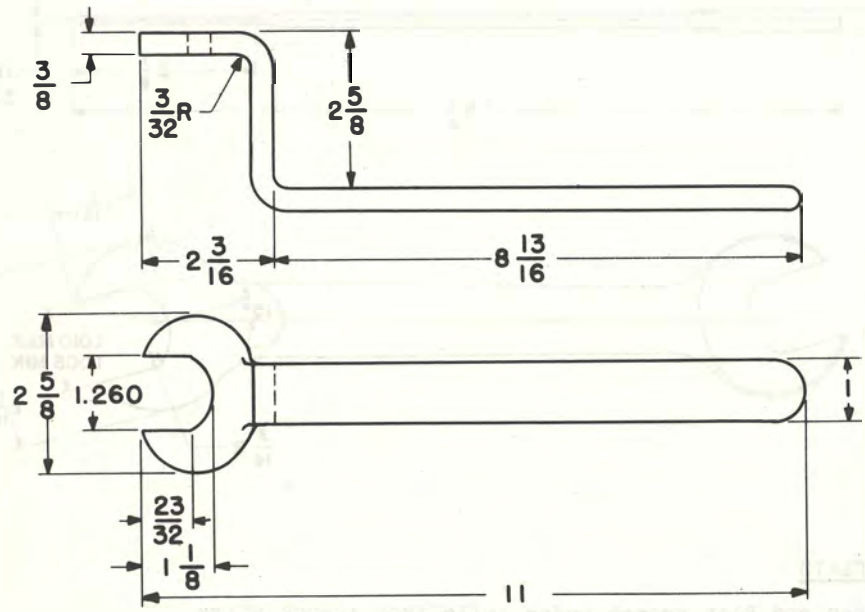

1-3/8 INCH ACROSS FLATS

232 Tool

Hexagonal open-end offset wrench adapted to engage with the eccentric bushings that govern the alignment of the friction rolls of one- or similar-type drives and is intended to be used in pairs, one to engage the upper and the other the lower bushing while check nut is being adjusted. Thickness of wrench 0.148 in.

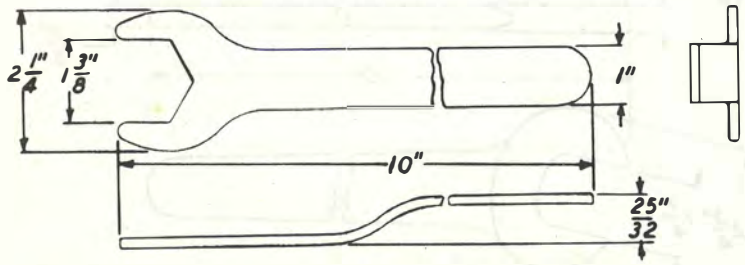

1-3/8 INCH ACROSS FLATS

R-2065 Open-end Offset Flat Wrench

Used on eccentric bushings and pivot screw locknuts of friction roll drives when adjusting the position of the cork rolls. Offset used when "Saftofuse" box and motor bracket interferes with use of straight wrenches.

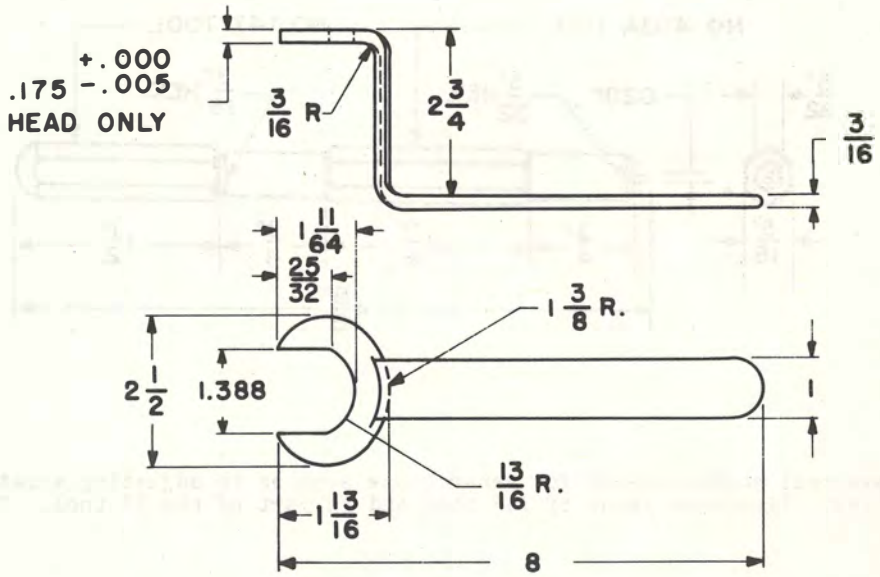

X-75515

5/32 INCH ACROSS FLATS

72 Tool

Combination 5/32 inch and 3/16 inch hexagonal double-end socket wrench and screwdriver used in adjusting armature contact screws of relays. Also for use on 223-type keys and spring-driven sequence switches. This tool is a combination of the 147 and 403A tools.

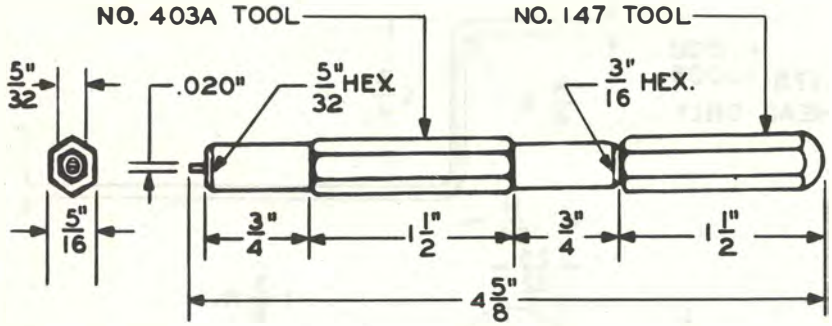

403A Tool

Double-end hexagonal socket wrench for general use such as in adjusting armature contact screws of relays. Fits over shank of 147 tool and is part of the 72 tool. Zinc plate finish.

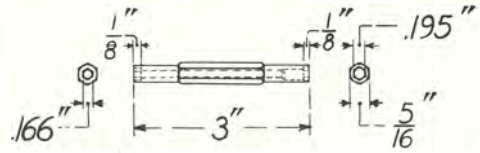

KS-8187 Wrench

Hexagonal socket wrench used with modified Allen-type hexagonal socket head cap screws used in KS-8164 ventilators for telephone booths.

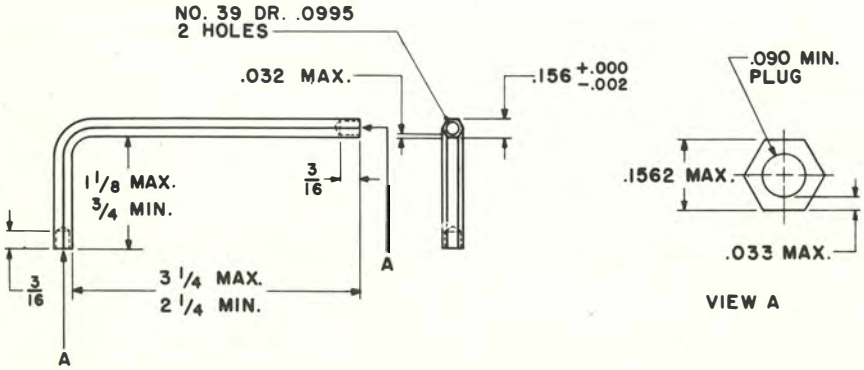

3/16 INCH ACROSS FLATS

72 Tool

See 72 Tool under Socket Wrenches, 5/32 INCH ACROSS FLATS.

220 Tool

Hexagonal socket wrench arranged to fit over the screwdriver shank of the KS-6854 tool. Forms part of the 221 tool.

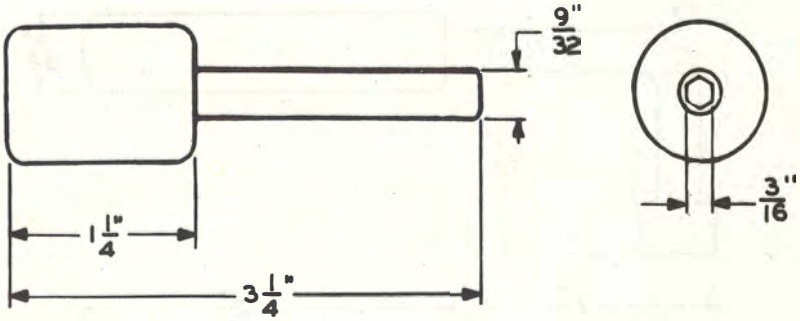

221 Tool

X-75515

Combination 3/16 inch and 5/16 inch hexagonal socket wrench and screwdriver. This tool consists of the shank of the 219 tool fitted over the shank of the 220 tool which is fitted over the shank of the KS-6854 tool. Used on flat-type relays.

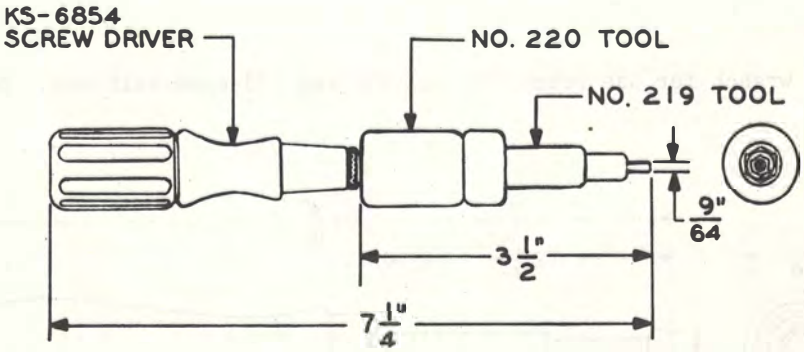

221W Tool

Combination 3/16 inch and 5/16 inch hexagonal socket wrench and screwdriver. This tool consists of the shank of the 219 tool fitted over the shank of the 220 tool which is fitted over the shank of the KS-14431 screwdriver. Used in relay maintenance in toll switchboards. It is the same as the 221 except that it does not have Bell System marking.

3/16 INCH ACROSS FLATS

403A Tool

See 403A Tool under 5/32 INCH ACROSS FLATS.

476A Tool

Hexagonal offset socket wrench used on armature mounting nuts, 247- and 248-type relays and 197- and 198-type switches. Depth of socket hole 1/8 inch.

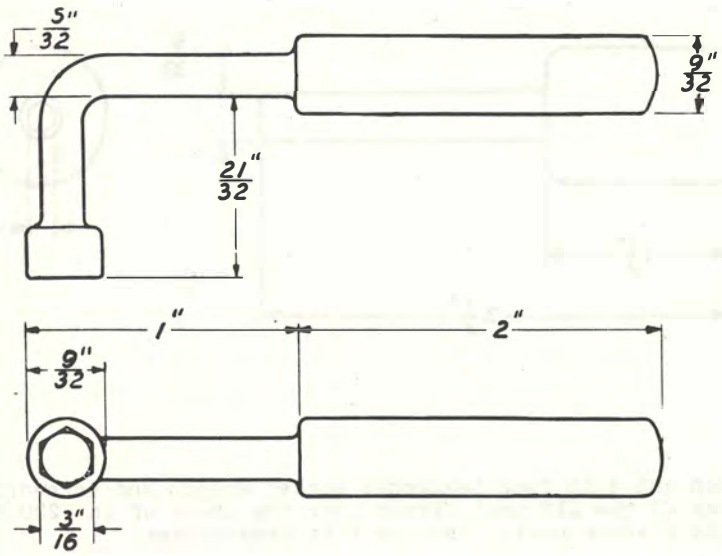

555A Tool

Hexagonal socket wrench for use primarily on 197- and 198-type switches. Depth of socket hole 3/32 inch.

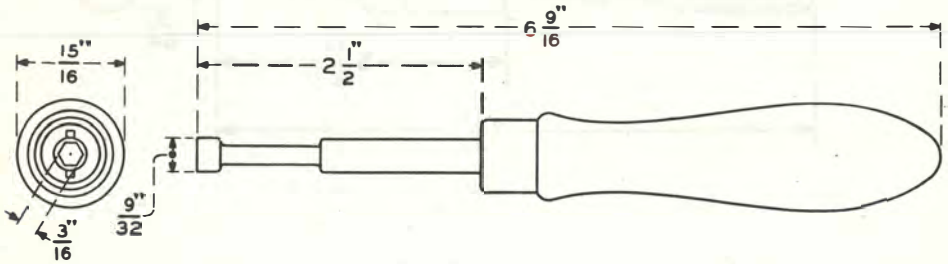

3/16 INCH ACROSS FLATS

R-2386 Hexagonal Socket Wrench

Used for miscellaneous adjustment on elevator apparatus.

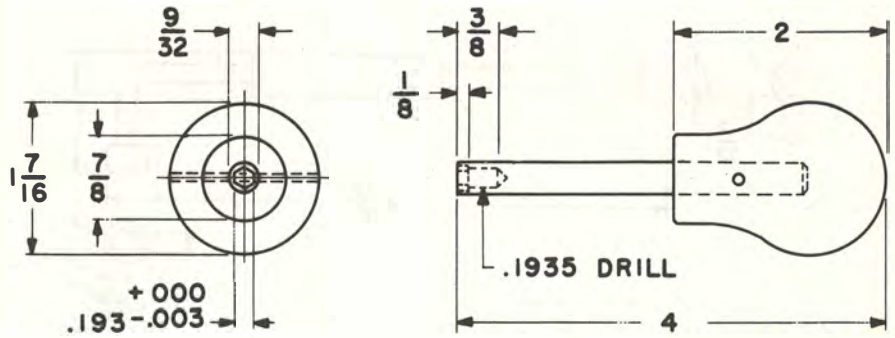

7/32 INCH ACROSS FLATS

48 Tool

Combination 7/32 inch and 1/4 inch hexagonal double-end socket wrench and screwdriver used in adjusting armature contact screws of relays.

X-75515

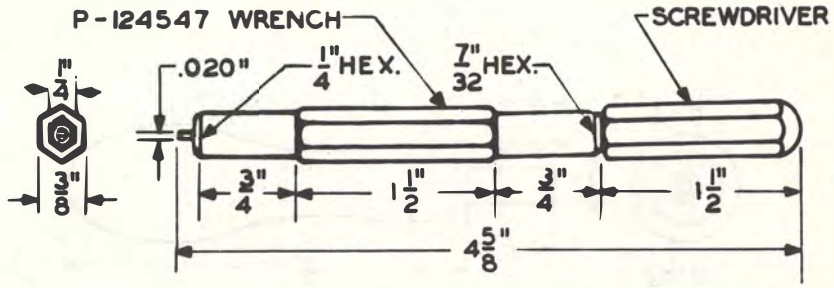

7/32 INCH ACROSS FLATS

556A Tool

Double-end hexagonal offset socket wrench for use on hexagon-head screws in step-by-step and panel dial systems. Depth of socket hole 3/32 inch.

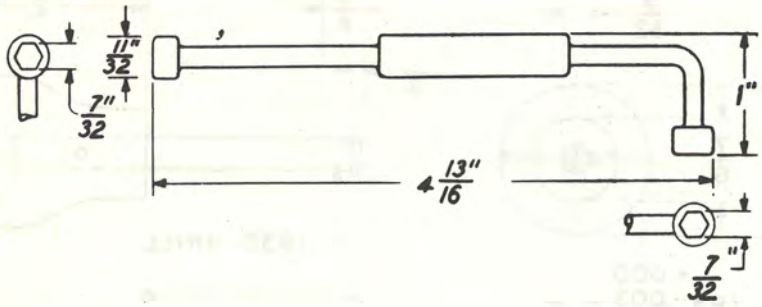

1/4 INCH ACROSS FLATS

32 Tool

Hexagonal single-end wrench for use on 444-type jacks.

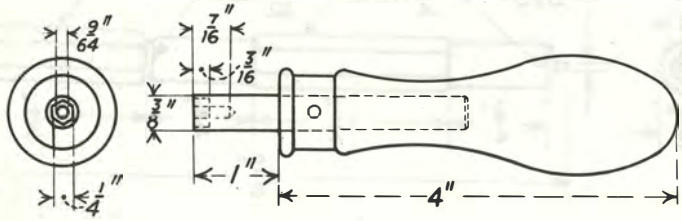

48 Tool

See 48 Tool under 7/32 INCH ACROSS FLATS.

1/4 INCH ACROSS FLATS

254 Tool

T-handle socket wrench used on sequence switch driving shaft coupling in panel-type dial equipments.

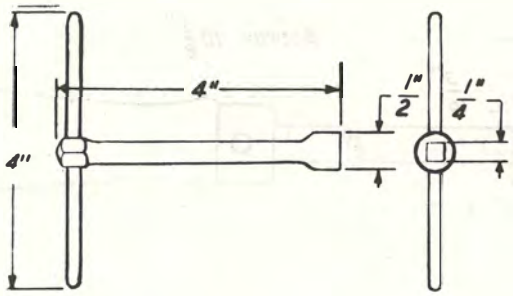

276 Tool

Hexagonal socket wrench for use on mounting nuts of 18- and 19-type reistances which have not been wired.

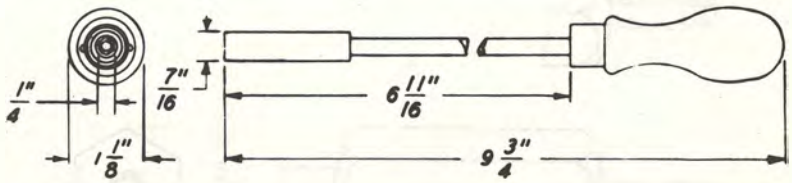

X-75515

277 Tool

Hexagonal open offset wrench for use on mounting nuts of 18- or 19-type resistances which have been wired in position.

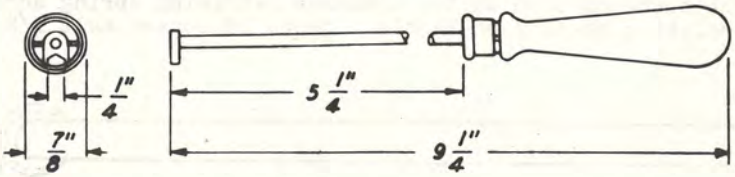

1/4 INCH ACROSS FLATS

366 Tool

Hexagonal socket wrench for use on 8A mounting plate studs.

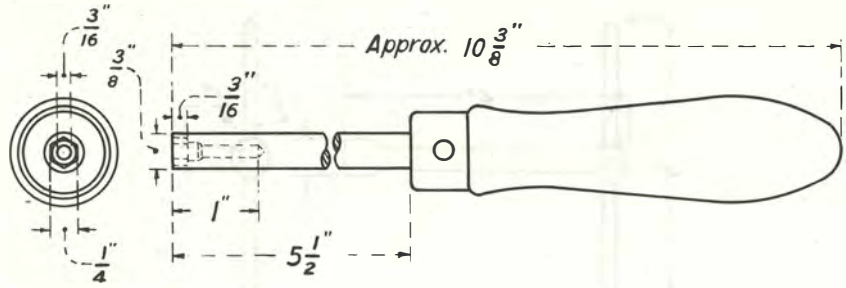

447A Tool

Protector wrench and adjuster used on protector mountings and 444-type jacks.

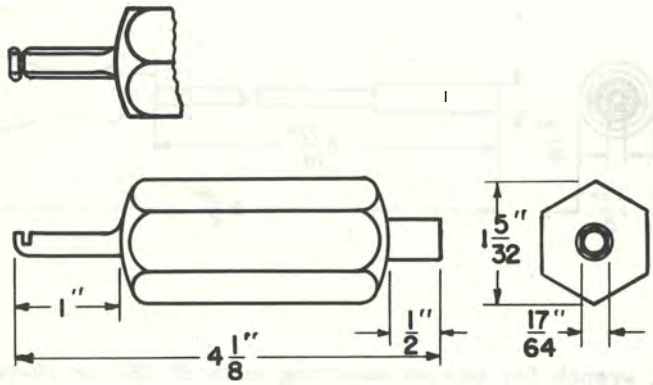

544A Tool

Hexagonal offset socket wrench used on the armature retaining spring screw on the 263- and 264-type relays. Insulating coating on handle. Depth of socket hole 1/8 inch.

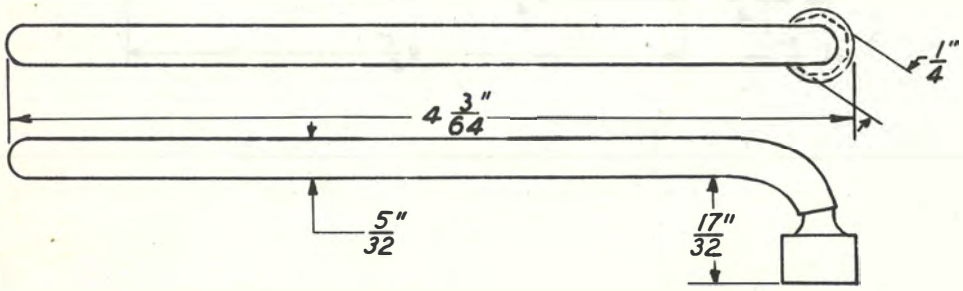

9/32 INCH ACROSS FLATS

538A Tool

Hexagonal offset socket wrench. Used on screws for selecting off-normal springs and centering springs. Depth of socket hole 3/16 inch.

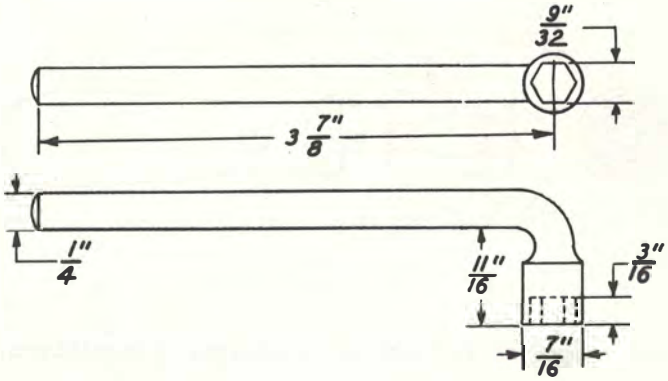

110 Tool

Hexagonal double-end socket wrench for use on 20-type desk stands. Also for use on 20- and 40-type transmitter arms and duplex motors.

X-75515

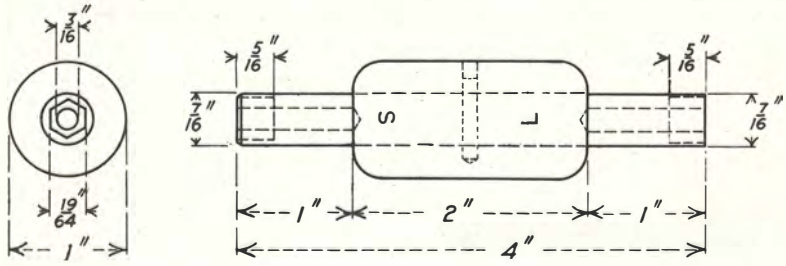

KS-6263 Hexagonal Socket Wrench

Used in connection with sequence switches in panel dial systems. Handle has a black finish.

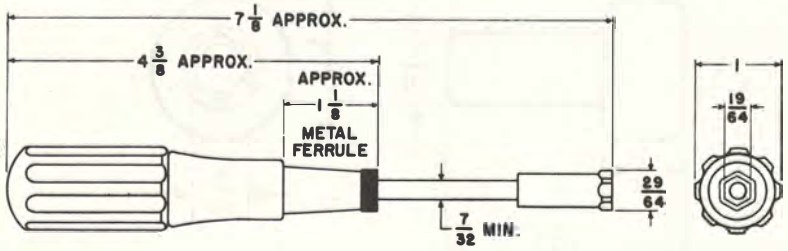

5/16 INCH ACROSS FLATS

45B Tool

Hexagonal socket wrench for general use. Used on armature adjusting nuts of relays and clamping and mounting nuts of 114- and similar-type relays.

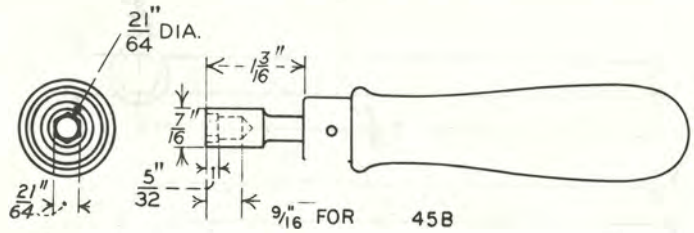

70 Tool

Hexagonal double-end socket wrench for use on receivers, transmitters, and subscriber set binding posts.

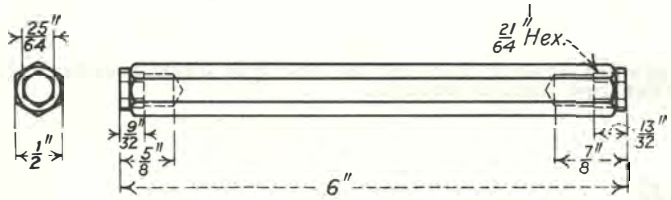

110 Tool

See 110 Tool under 9/32 INCH ACROSS FLATS.

219 Tool

Hexagonal socket wrench. Arranged to fit over shank of the 220 tool. Zinc plate finish. This tool forms part of the 221 tool.

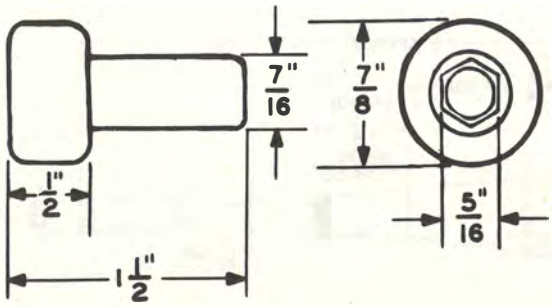

5/16 INCH ACROSS FLATS

220B Tool

Hexagonal socket wrench arranged to fit over the screwdriver shank of the KS-6854 tool. Steel portion has a covering of polyvinyl tubing. This tool forms part of the 221 tool.

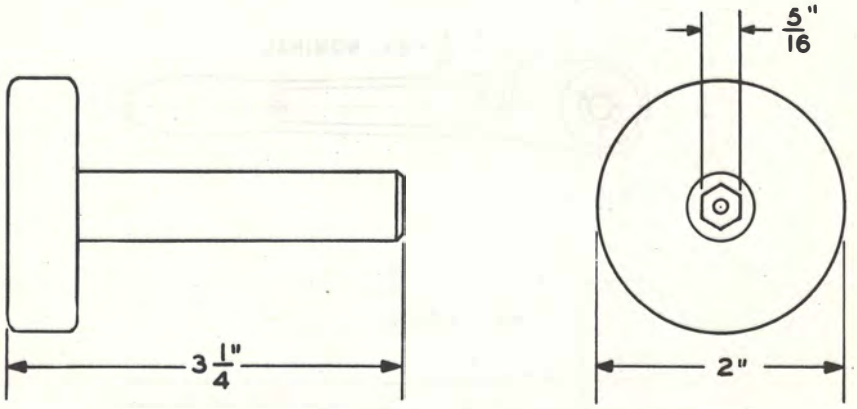

221 Tool

See 221 Tool under 3/16 INCH ACROSS FLATS.

X-75515

221W Tool

See 221W Tool under 3/16 INCH ACROSS FLATS.

KS-2630 Hexagonal Socket Wrench

Used for making line finder stop clamp adjustments in panel dial systems.

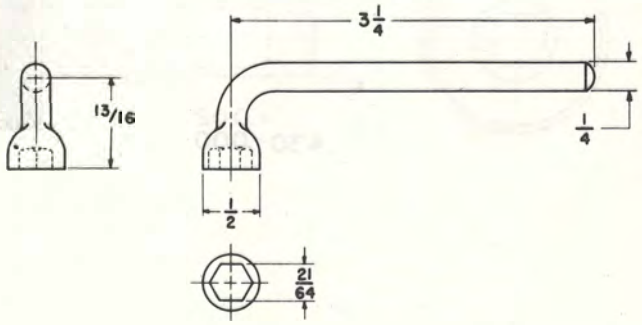

5/16 INCH ACROSS FLATS

KS-8237 Socket Wrench

Ratchet socket wrench used in conjunction with the D-158524 screwdriver for tightening clamping nuts on step-by-step banks. Cadmium plate finish on end.

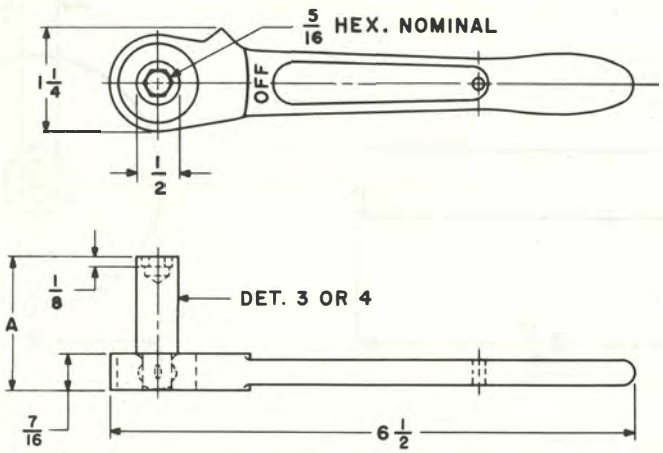

R-2787 Hexagonal Socket Wrench

Used for adjusting tension spring on KS-5635 power relay. One end equipped with knurled ring. Other has 5/16 inch breached socket. Operates within R-2788 hexagonal socket wrench.

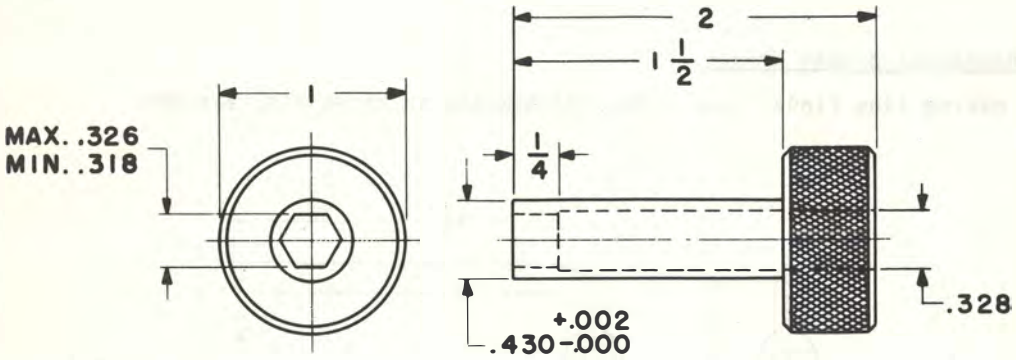

11/32 INCH ACROSS FLATS

33 Tool

Hexagonal single-end wrench for removing contact protection assembly on A- and B-type sequence switches. Also used on precision-type interrupters, vertical drive shafts, and distributing frames.

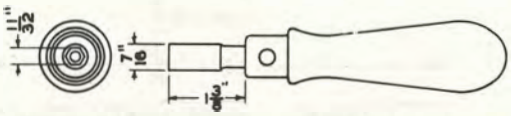

3/8 INCH ACROSS FLATS

46 Tool

Hexagonal single-end socket wrench for general use.

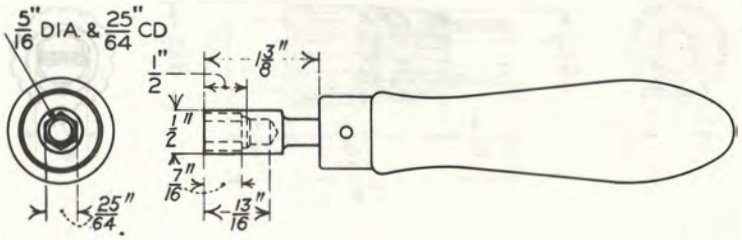

X-75515

102 Tool

Hexagonal socket wrench for general use.

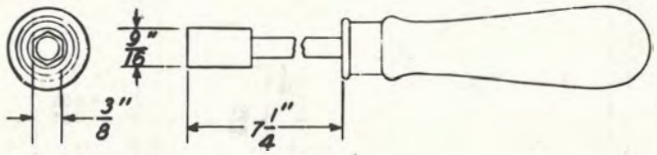

3/8 INCH ACROSS FLATS

216B Tool

Combination 3/8 inch and 7/16 inch hexagonal double-end socket wrench and screwdriver. The socket wrenches may be extended beyond the screwdriver ends and locked in position or released to turn freely over the screwdriver shanks. Used in placing fuses in cable terminals and connecting wires to fuses and binding posts.

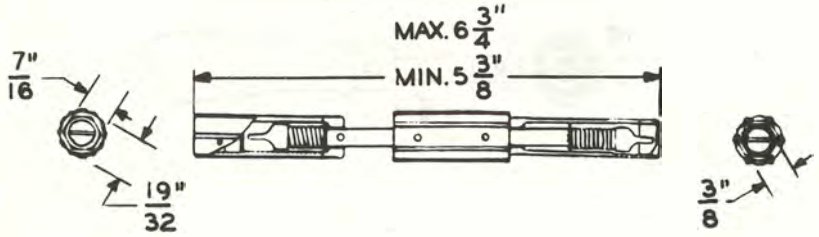

311 Tool

Double-end hexagonal socket wrench for use on ringers and 2-, 4-, and 5-type dials. Phenol plastic handle. 500 volts test.

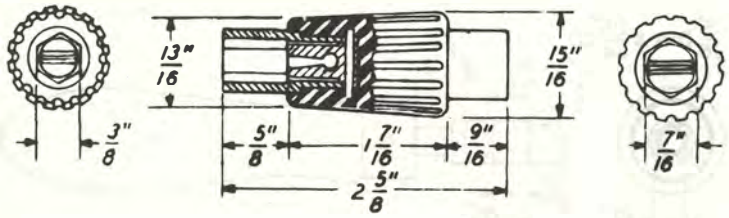

KS-6257 Hexagonal Socket Wrench

T-handle socket wrench used in adjusting clamping nut of rotary magnets of step-by-step selector and connector switches. Black finish.

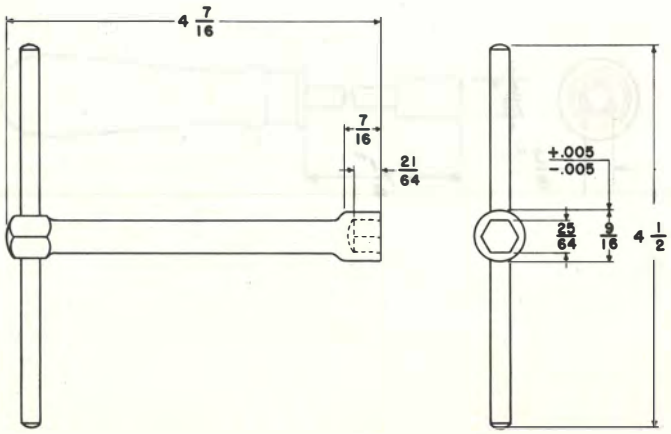

3/8 INCH ACROSS FLATS

AT-7119 Hexagonal Socket Wrench

Used on cable terminals and pressure testing valves. The socket has two hexagonal openings; an end opening for nuts or bolt heads 7/16 inch across flats and a slightly smaller opening above this. Electroplated finish.

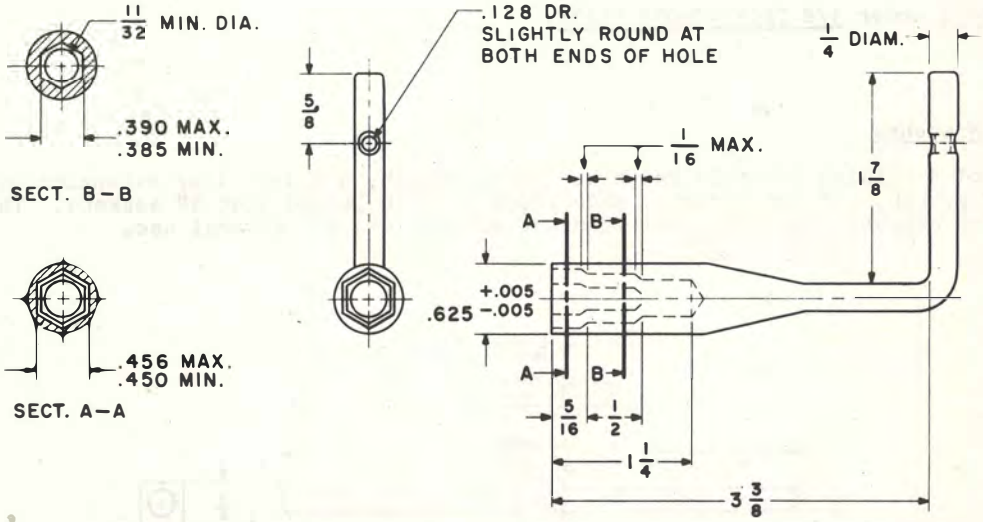

X-75515

7/16 INCH ACROSS FLATS

84 Tool

Combination 7/16 inch hexagonal socket wrench and screwdriver used on 7-type fuses.

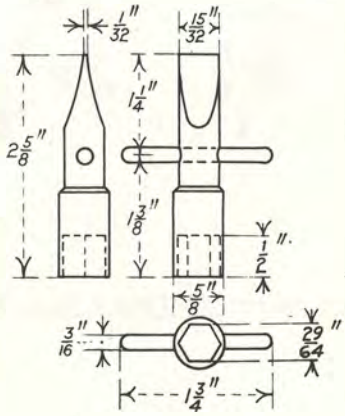

7/16 INCH ACROSS FLATS

216B Tool

See 216B Tool under 3/8 INCH ACROSS FLATS.

311 Tool

See 311 Tool under 3/8 INCH ACROSS FLATS.

KS-14220 Wrenches

Consists of a sliding T-Handle known as list 1 wrench, a 6-inch long extension bar known as list 7 wrench, and two sockets, identified as list 14 and list 18 sockets. These wrenches are used on crossbar switches, multicontact relays, and for general use.

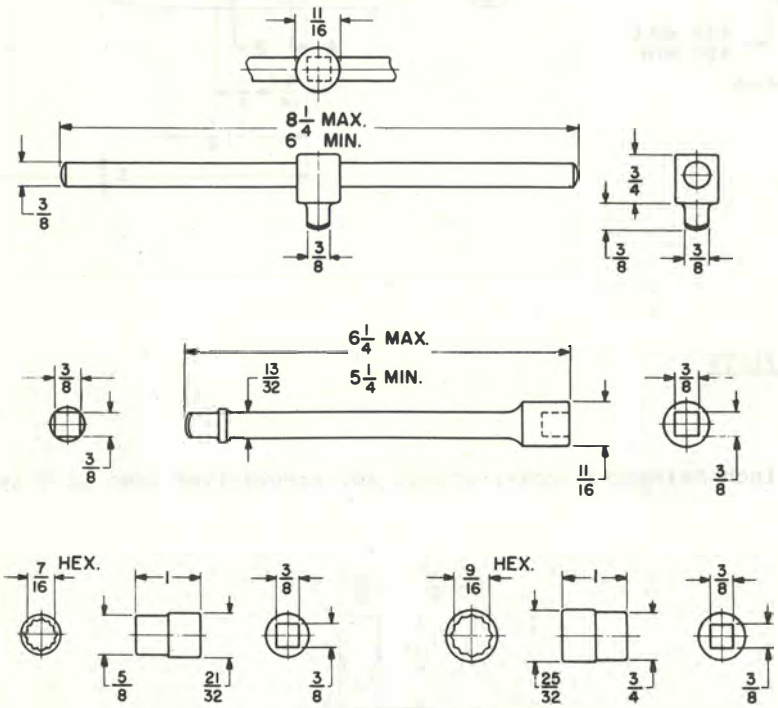

AT-7119 Hexagonal Socket Wrench

See AT-7119 Hexagonal Socket Wrench under 3/8 INCH ACROSS FLATS.

7/16 INCH ACROSS FLATS

R-2788 Hexagonal Socket Wrench

Used for adjusting tension spring on KS-5635 power relay. One end has knurled ring. Other has 7/16 inch broached socket.

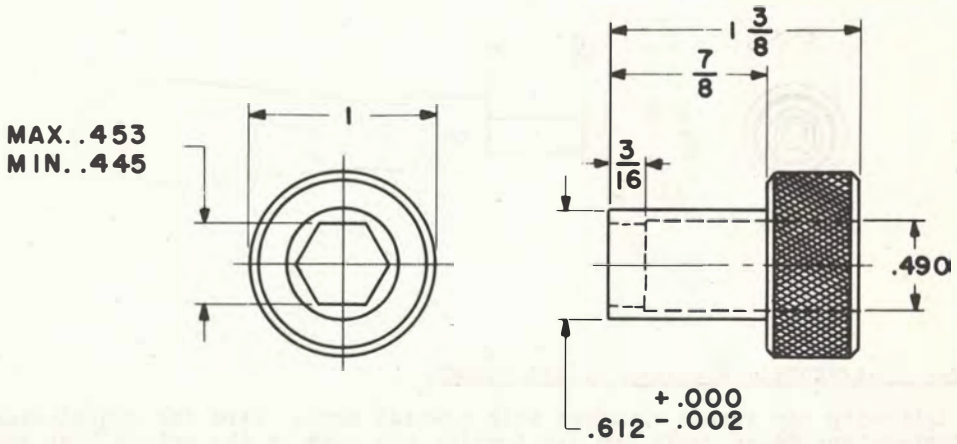

15/32 INCH ACROSS FLATS

X-75515

213 Tool

Hexagonal socket wrench used on 103- and 137-type plugs.

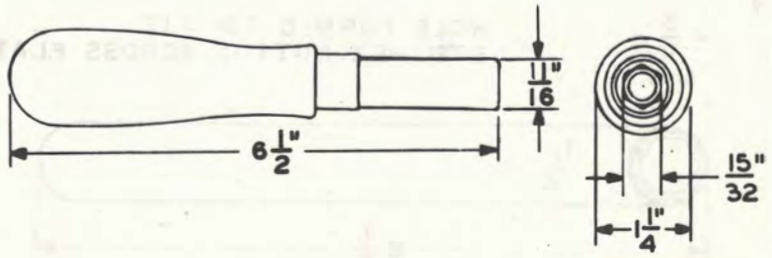

1/2 INCH ACROSS FLATS

47 Tool

Hexagonal socket wrench for use on 16-type drives. Also used on hexagon nut of sequence switch driven disc and tape announcing machines.

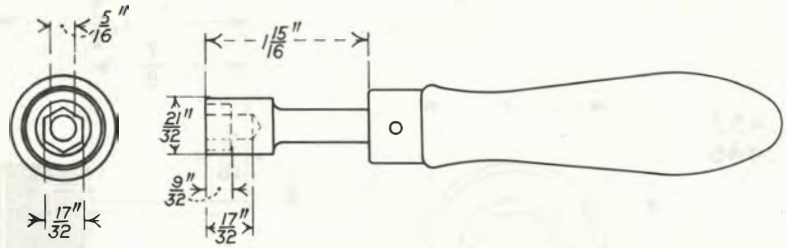

R-2813 Socket, Hexagonal, 1/2 inch Offset Wrench

Used for tightening cap screws equipped with special nuts. Used for junctioning adjacent bays of channel-type relay racks and for turning the nuts on the driven disc end of sequence switch rotor assemblies.

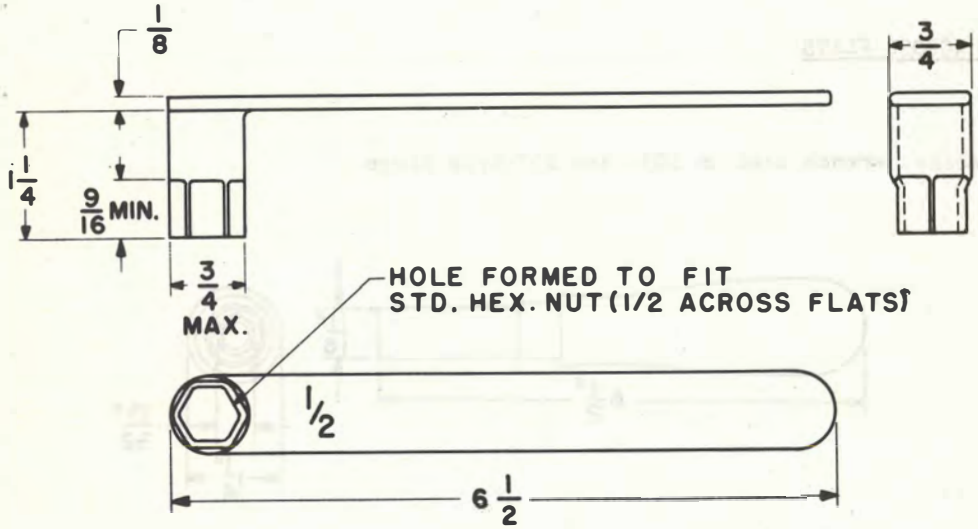

9/16 INCH ACROSS FLATS

KS-14220 Wrenches

See KS-14220 Wrenches under 7/16 INCH ACROSS FLATS.

5/8 INCH ACROSS FLATS

R-3057 Socket, Hexagonal, Pivoted, Double-end 5/8 to 7/8 Inch

Double-end hexagonal socket wrench pivoted on end of body to be movable through 180-degree arcs. Used for installing ladder-type cable racks and rolling ladder tracks.

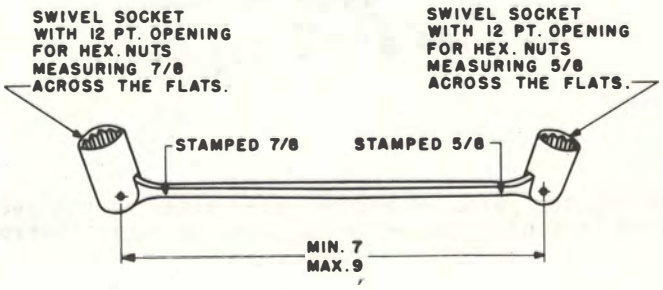

11/16 INCH ACROSS FLATS

R-1318 Hexagonal Socket Wrench

Used in various erecting and aligning operations.

X-75515

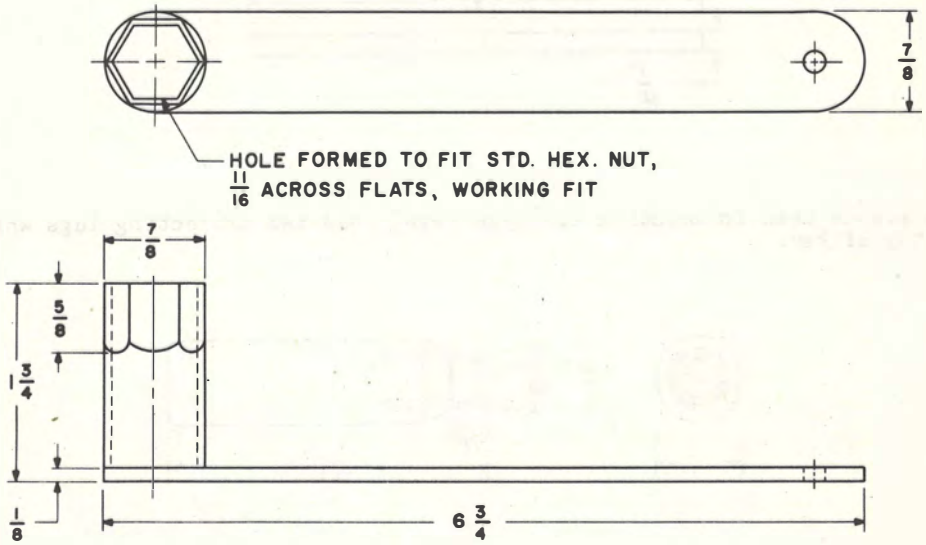

7/8 INCH ACROSS FLATS

R-3057 Pivoted double-end hexagonal socket wrench

See R-3057 Pivoted Double-end Hexagonal Socket Wrench under 5/8 INCH ACORSS FLATS.

320 Tool

Spanner wrench used on mounting screws of flush-type bulletin holders in key shelves of No. 1 toll switchboard. Knurled as indicated. Nickel copper nickel dip finish.

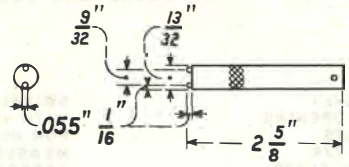

346 Tool

Spanner wrench used in holding gears in drives while clamping the gears and associated parts in position. Used in conjunction with 347 tool in early 10-type bearings.

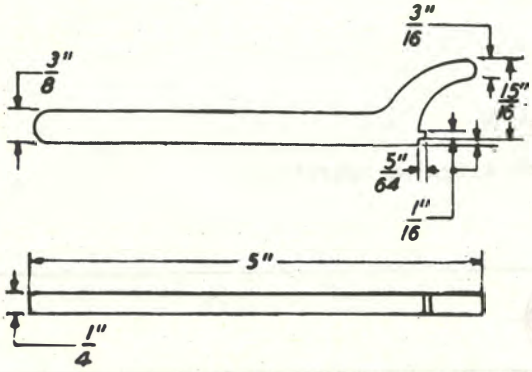

82B Tool

Spanner-type wrench used in mounting 223-type keys. Has two projecting lugs which engage the slot in top of key.

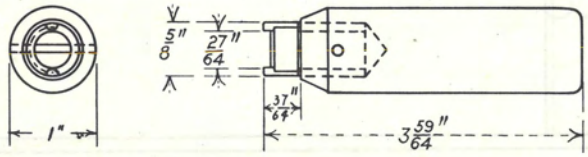

438A Tool

Used in removing and replacing transmitters, receivers and various parts on E1B-type handsets.

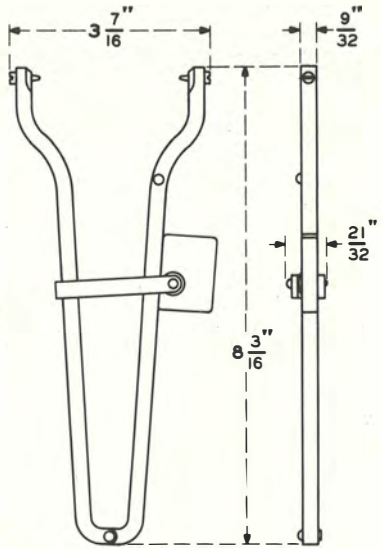

647A Tool

X-75515

Single-tooth hook-type spanner wrench used for removing and replacing the interposer magnets of KS-13835 readers in AMA systems.

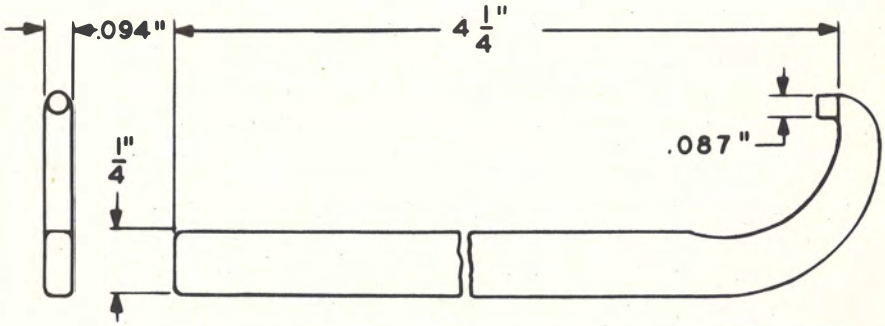

523A Tool

Spanner-type wrench for use on the stuffing box nut of 320-type telephone sets. Zinc plate finish.

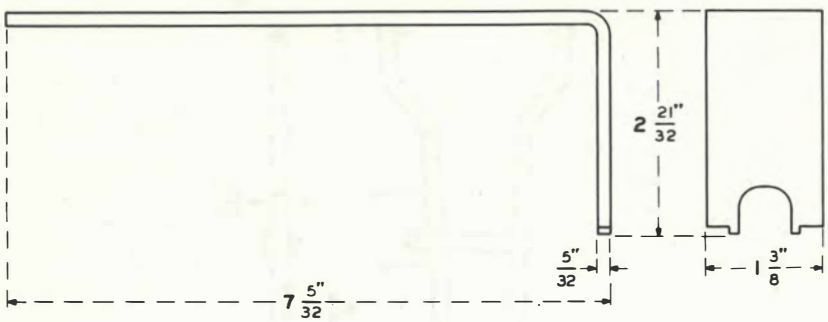

R-2872-223D Key Wrench

A tubular steel shell with a handle bar on one end and two prongs on the other. Used for turning the sleeve of the 223D key for mounting and adjusting.

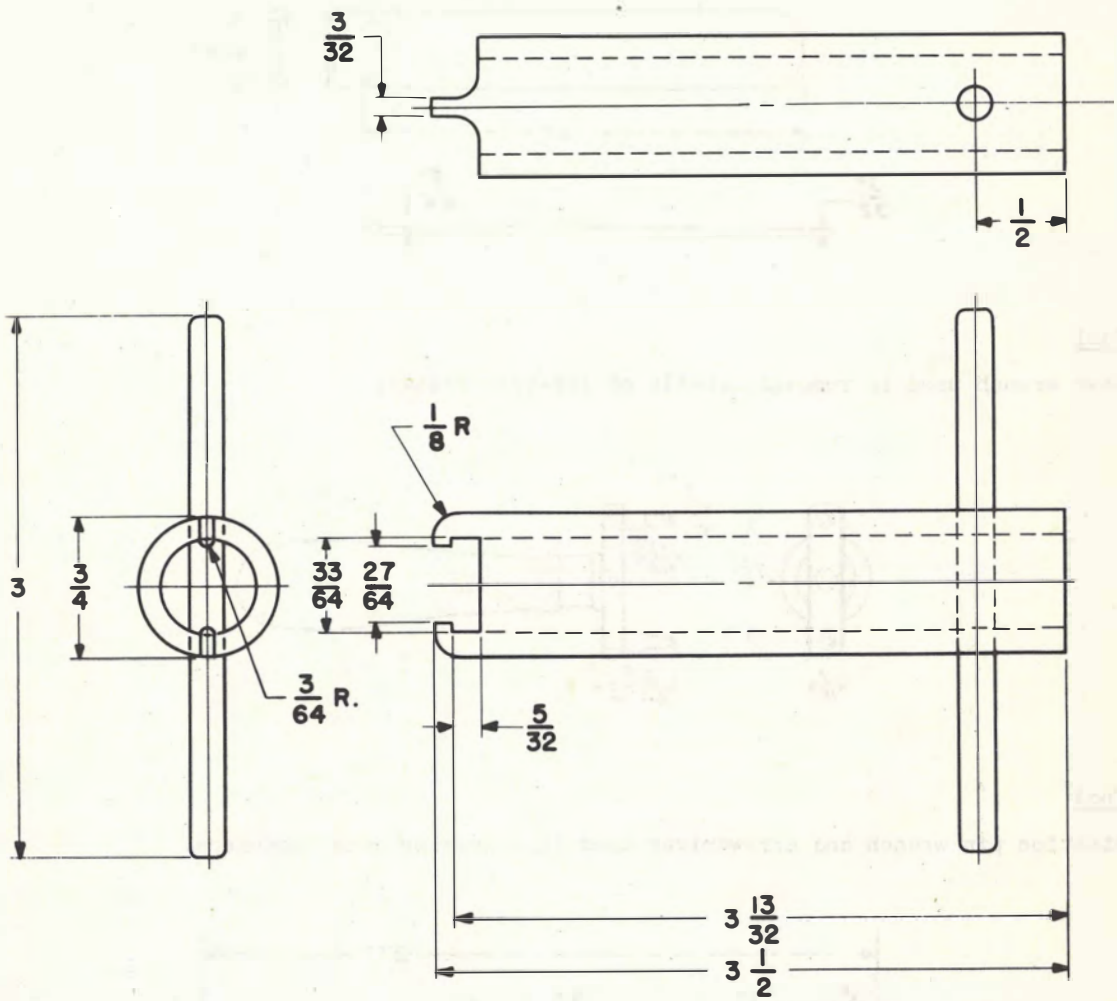

X-75515

346B Tool

Single-tooth spanner wrench intended for adjusting the input and output drives of the reeling equipment in AMA systems.

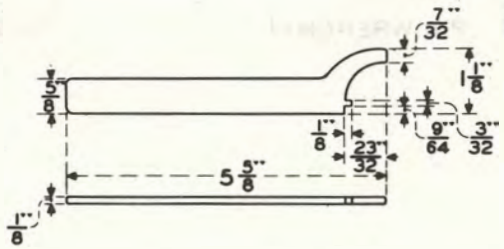

347 Tool

Used in conjunction with the 346 tool on earlier 10-type bearings.

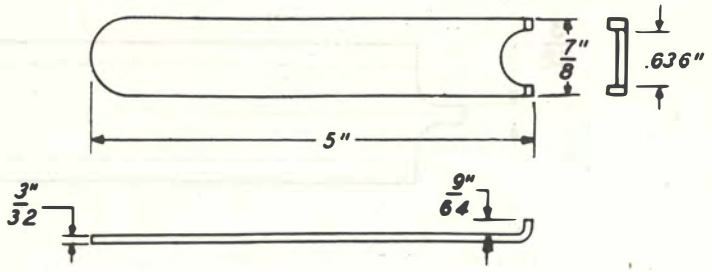

51 Tool

Spanner wrench used in removing shells of 118-type relays.

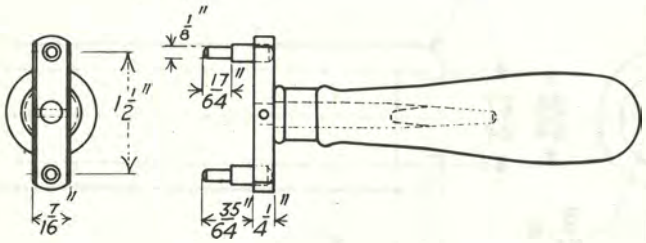

64 Tool

Combination pin wrench and screwdriver used in adjusting jack fasteners.

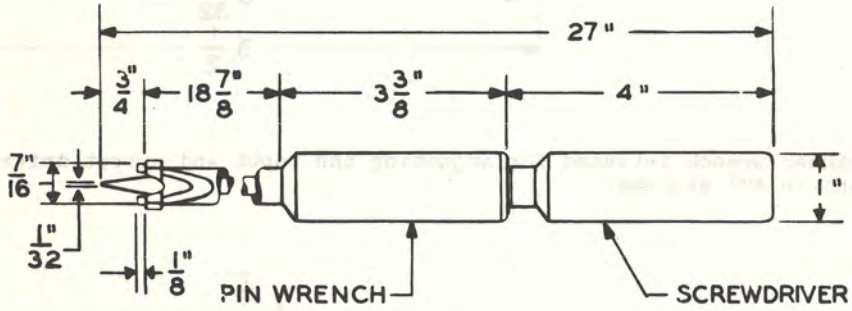

SPANNER WRENCHES

103 Tool

Combination pin wrench and screwdriver used in adjusting 16-type fasteners.

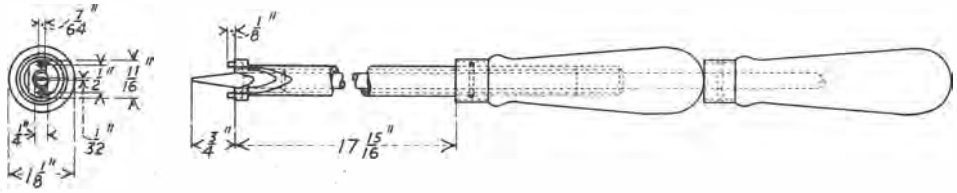

STRAP WRENCHES

514B Tool

X-75515

Strap wrench used in tightening and loosening the transmitter and receiver caps of hand-sets.

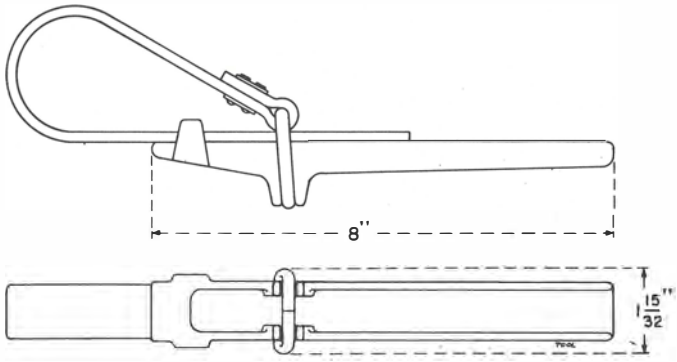

1A Listening Stick

Used at duplex and repeater sets to enable an attendant to determine the action of an instrument regardless of the general noise from surrounding instruments. Consists of a wooden rod with a disc at one end which supports a wooden diaphragm with an air chamber beneath.

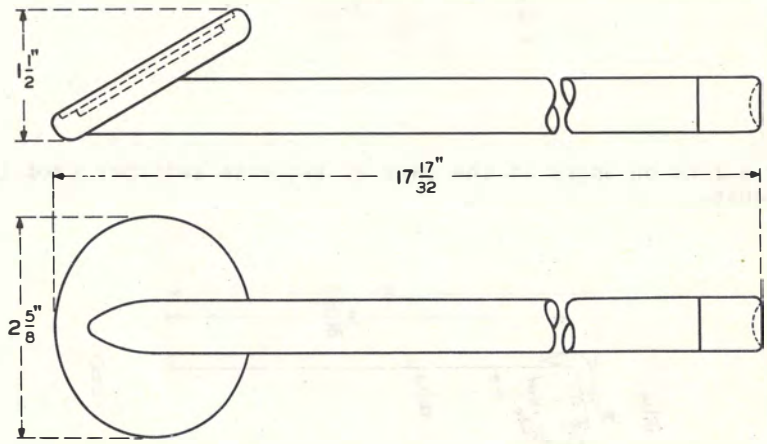

71 Tool

Wire skinner used in removing the insulation from braided rubber-covered wire. Blades are adjustable, arranged to receive wire of different gauges.

X-75515

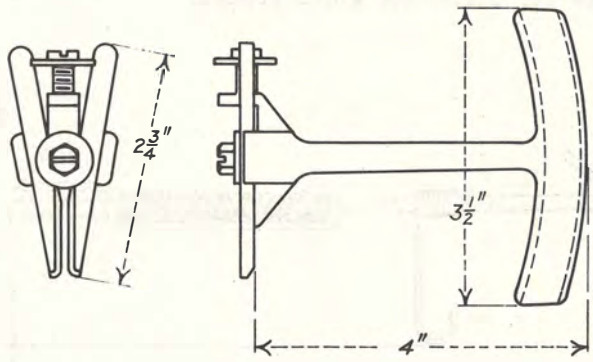

135 Tool

Steel coupling used in mounting miscellaneous cleaning tools on a 1/2-inch motor shaft.

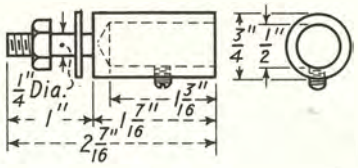

240 Tool

Used in scribing a line on edges of the cams of sequence switches used in panel machine switching equipments.

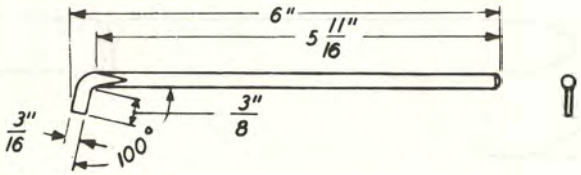

248 Tool

An adjustable support for portable lamps arranged to attach to channels or angles of panel-type frames. Adjustable for different width frames.

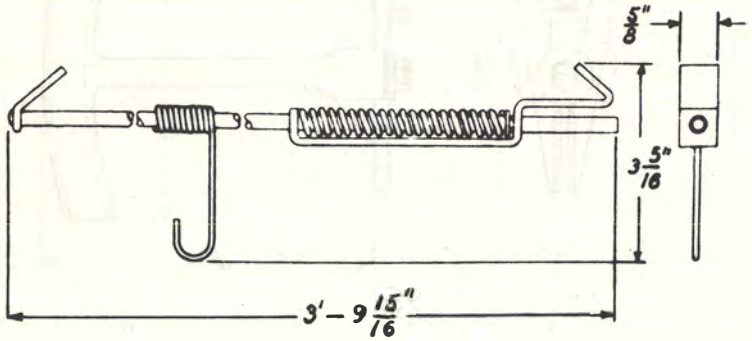

284 Tool

Straight metal needle used in sewing local cable (PBX installation only).

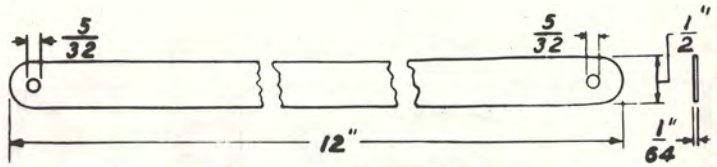

286 Tool

Metal comb used in dressing skinners to jacks.

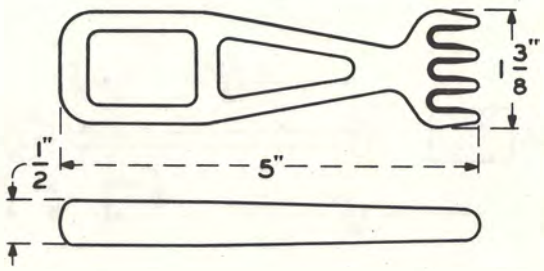

X-75515

287 Tool

Curved metal needle with a metal handle used as a cable sewing needle.

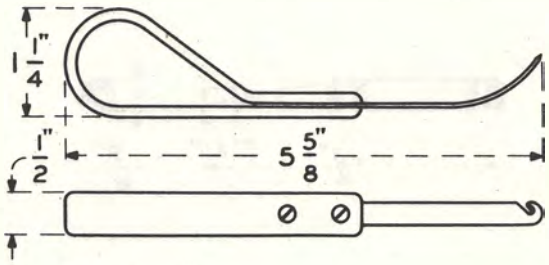

341-B Tool

Used in testing the secondary line switches and out-trunk switches in step-by-step dial systems.

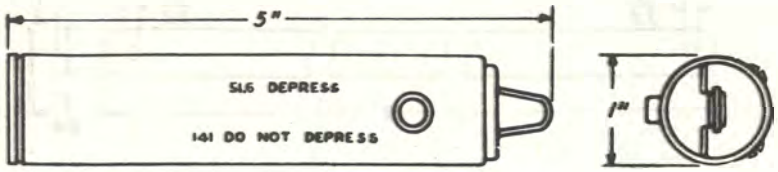

354 Tool

Sliding hammer for adjusting the angular positions of sequence switch cams. For use also with the 155A- and 157A-type interrupters.

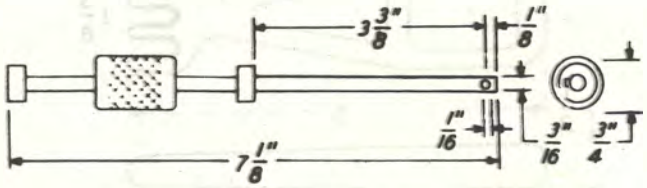

414B Tool

Used in driving 49- and 141-type jack sleeves into position when replacing worn sleeves in jack mountings.

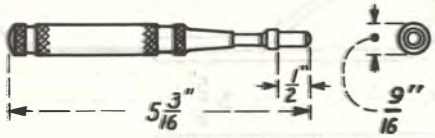

448A Tool

Used in pulling cross-connection wires through distributing frames in central offices.

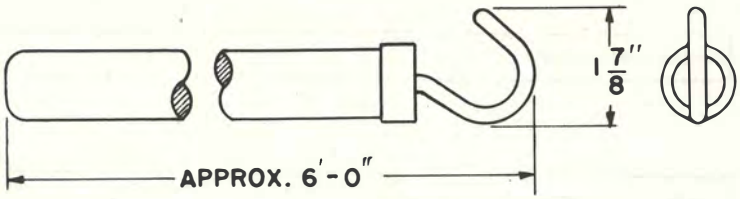

454A Tool

Nickel-dip finished metal adapter used in coupling 1/4-inch rubber tubing to the vacuum cleaner hose.

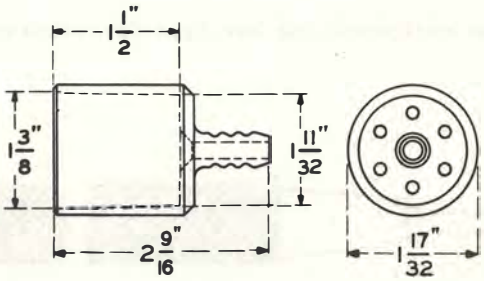

X-75515

455A Tool

Nickel-dip finished metal adapter used in coupling 1/2-inch rubber tubing to the vacuum cleaner hose.

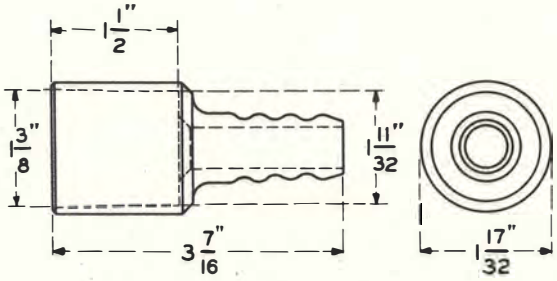

490A Tool

A scraper used in removing marking from the faces of jack mountings.

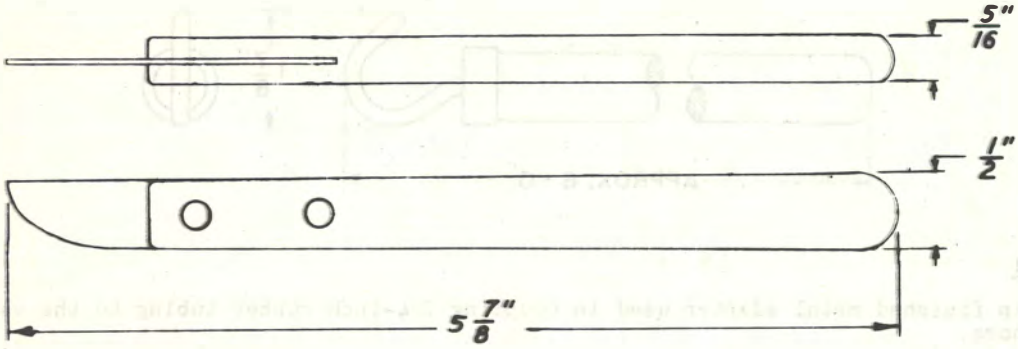

493A Tool

Used in replacing bearings on reciprocating bar-type interrupters. This tool forms part of the 1000A tool kit.

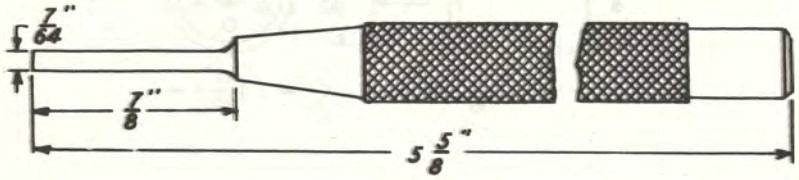

520A Tool

Used in remagnetizing magnets of telegraph relays such as 209, 215, and 255 types. Consists essentially of two electromagnets mounted on a metal base. One of the magnets has a movable core so that the space between it and the fixed core may be adjusted to suit the various relay magnets. The movable core may be locked in any desired position by a lever. In the circuit with these coils are a varistor and a momentary-make tumbler switch, by means of which the coils are energized for a period of 5 to 10 seconds while the relay magnet is being drawn through the opening between the electromagnet cores. Operates on 24-volts dc.

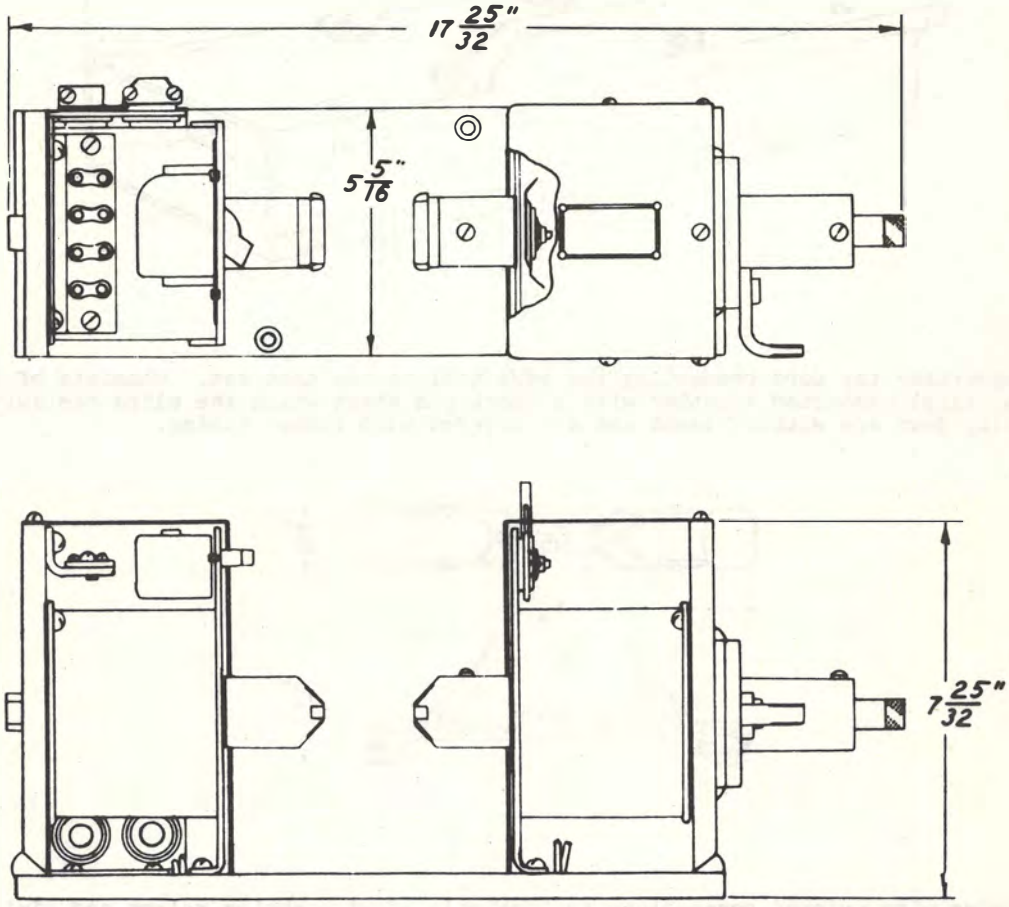

X-75515

522A Tool

Used in unlocking the partitions of adjustable book racks.

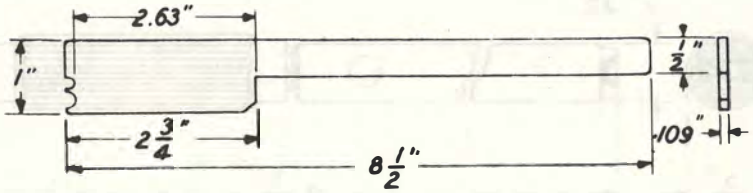

586A Tool

Used as a guard and holder for the 577A tool. Forms part of the 1004A tool kit.

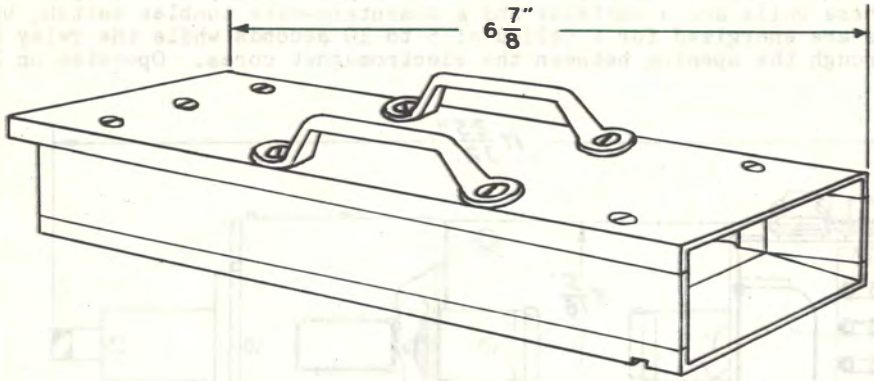

588A Tool

Used in supporting the cord connecting the 587A tool to the test set. Consists of two spring test clips connected together with a short pin about which the clips can swivel. The test clip jaws are without teeth and are covered with rubber tubing.

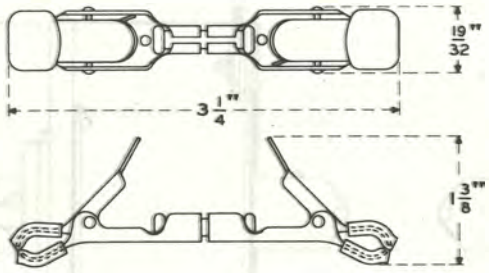

635A Tool

Used in making wire-wrapped connections to terminals of wire spring relays and similar terminals.

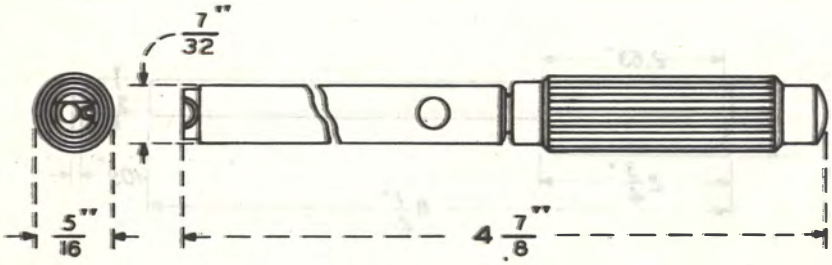

646A Tool

Used for releasing the dial ratchet of KS-13835 readers in AMA systems.

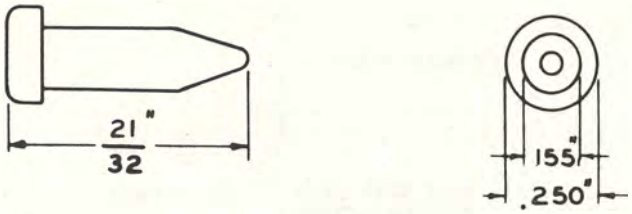

D-170283 Tweezers

Used to remove cards from crossbar switches.

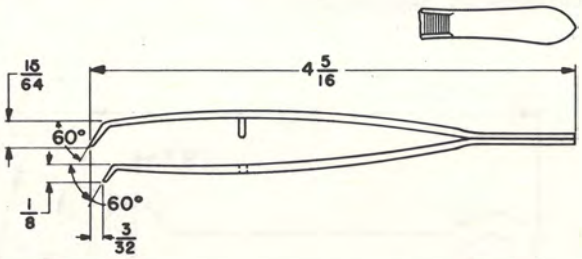

X-75515

KS-2632 Reading Glass

A magnifying glass used in making multiple and commutator brush spring adjustments and for other general purposes.

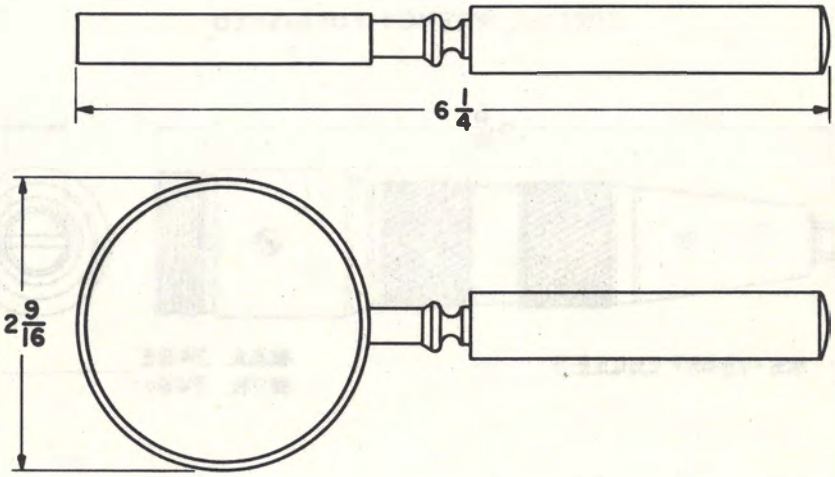

KS-6822 Tool

Used in panel-type dial telephone systems for removing pits or carbonized spots from the cams of sequence switches.

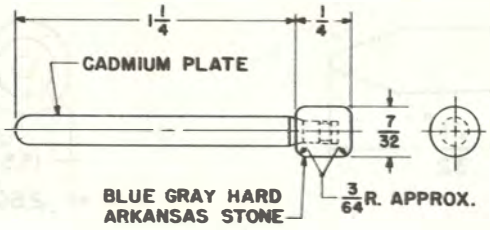

KS-6852 Handpiece

Used in removing pits or carbonized spots from sequence switch cams in panel-type dial systems. It is used in association with a cleaning tool, KS-6822, fastened to the collet end of the handpiece. Two locking pins, a wrench, and a KS-13457 collet are furnished as parts of this handpiece. A KS-6911 collet or a KS-6912 collet may also be used in this handpiece, but they must be ordered separately.

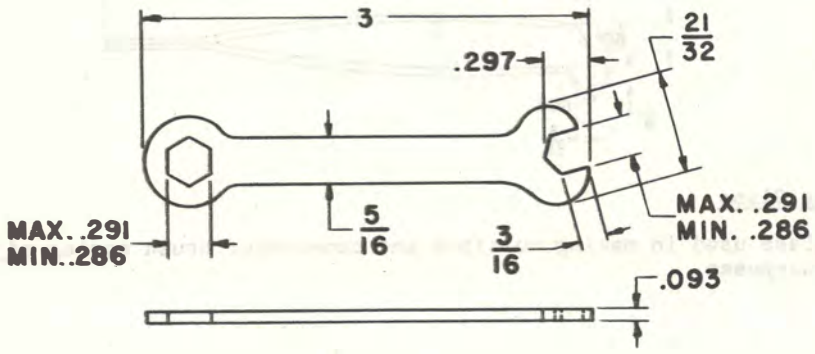

SPECIAL WRENCH FURNISHED

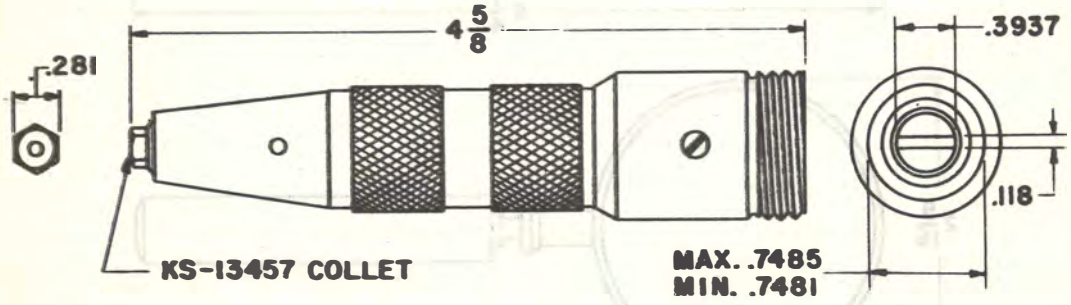

KS-6910 Handpiece

Used in cleaning protector spring contacting surfaces, potentiometer contacts, and jack sleeves in telephone systems. Two locking pins, a wrench, and a KS-6911 collet are furnished as parts of this handpiece. A KS-6912 collet or a KS-13457 collet may also be used with this handpiece, but they must be ordered separately.

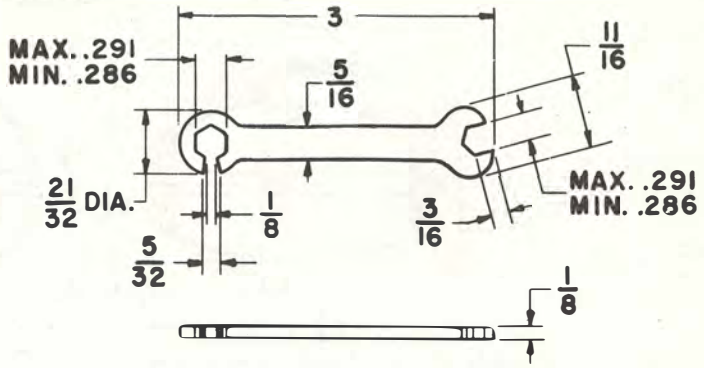

SPECIAL WRENCH FURNISHED

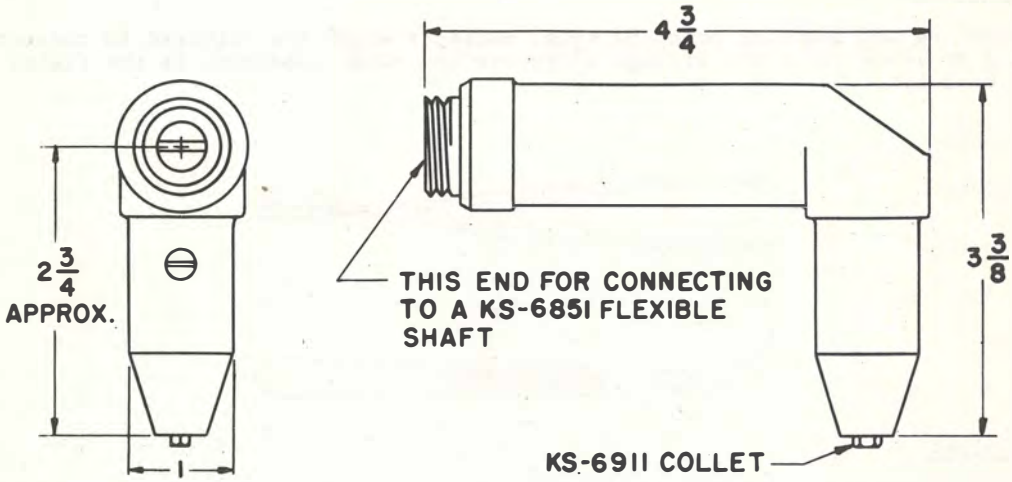

X-75515

KS-6912 Collet

Used in connection with the cleaning of jack sleeves in telephone systems. It is intended for holding a 390A or a 390B tool in the KS-6852 handpiece or in the KS-6910 handpiece.

KS-7118 Portable Lamp Guard

An insulated portable lamp guard with a handle for general use. It is part of a trouble lamp to be used by maintenance men in central offices.

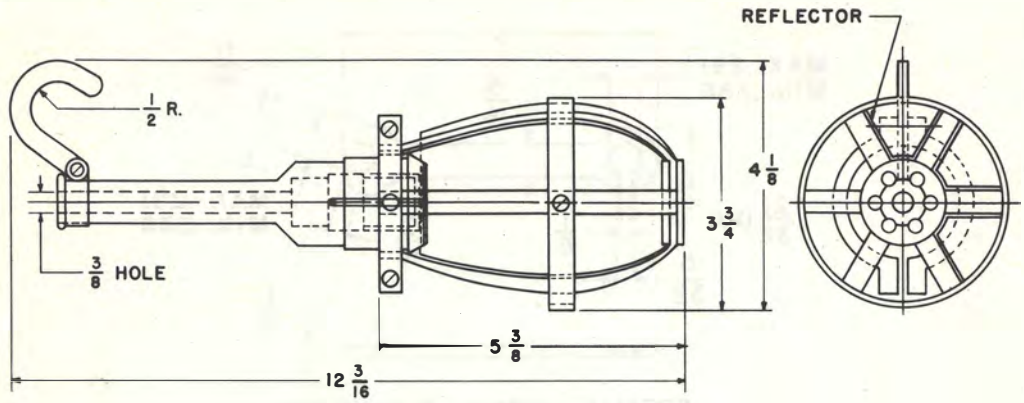

KS-8511 Tweezers

Used in handling and locating precious metal contacts which are required in connection with the welding of contacts on the springs of relays and other apparatus in the field. Part of the 1004A tool kit.

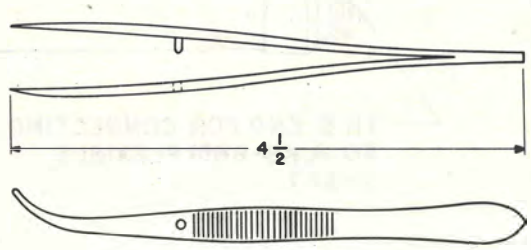

KS-13457 Collet

Used in connection with removing pits or carbonized spots from sequence switch cams in panel-type dial systems. It is intended for holding a KS-6822 tool in either the KS-6852 handpiece or the KS-6910 handpiece.

KS-13860 Fiber Pilot Pin

Used in aligning supply banks when reassembling bank of step-by-step switch after replacement of defective parts. Forms part of the KS-13854 tool kit.

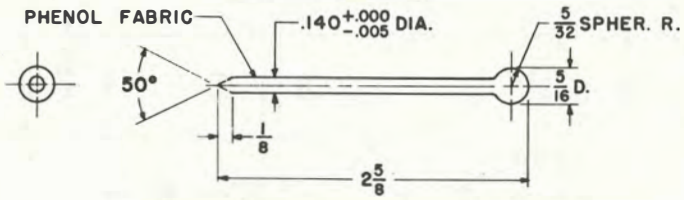

KS-14663 Punch

Used in punching knockouts in the KS-14513 cards used for the 1A translator. Consists of an aluminum rod having a needle point at one end.

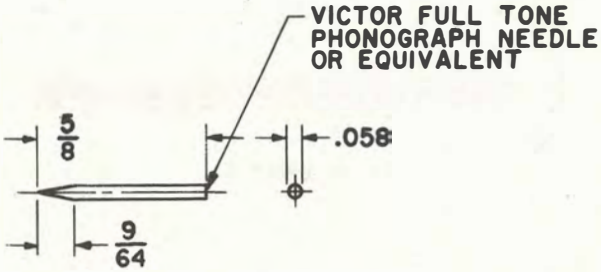

ENLARGED VIEW OF NEEDLE

X-75515

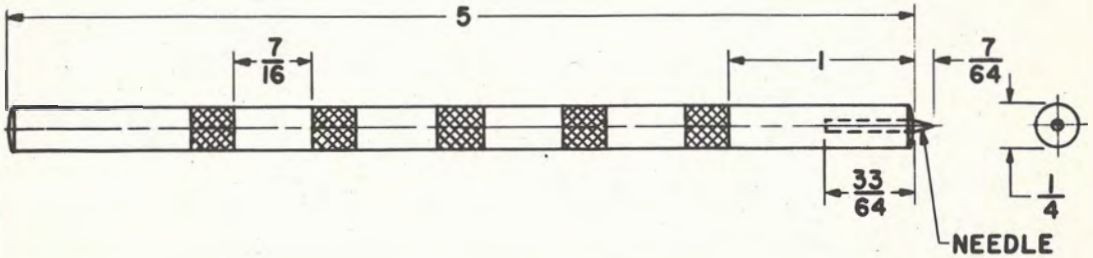

AT-6691 Inside Wiring Cable Stripper

Used in removing the outer braid from inside wiring cable.

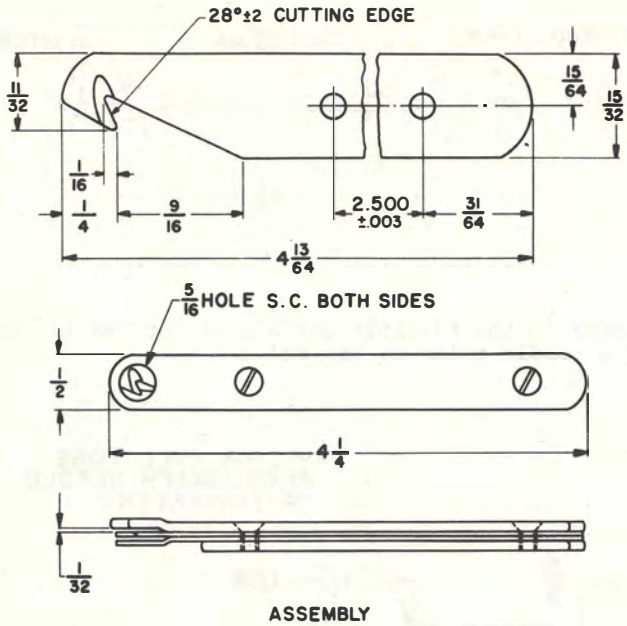

AT-7093 B Braid Stripper

Used in removing the braided coverings and the neoprene jacket from parallel types of drop wire. The handle also serves as a wrench for installing and disconnecting bridging connectors.

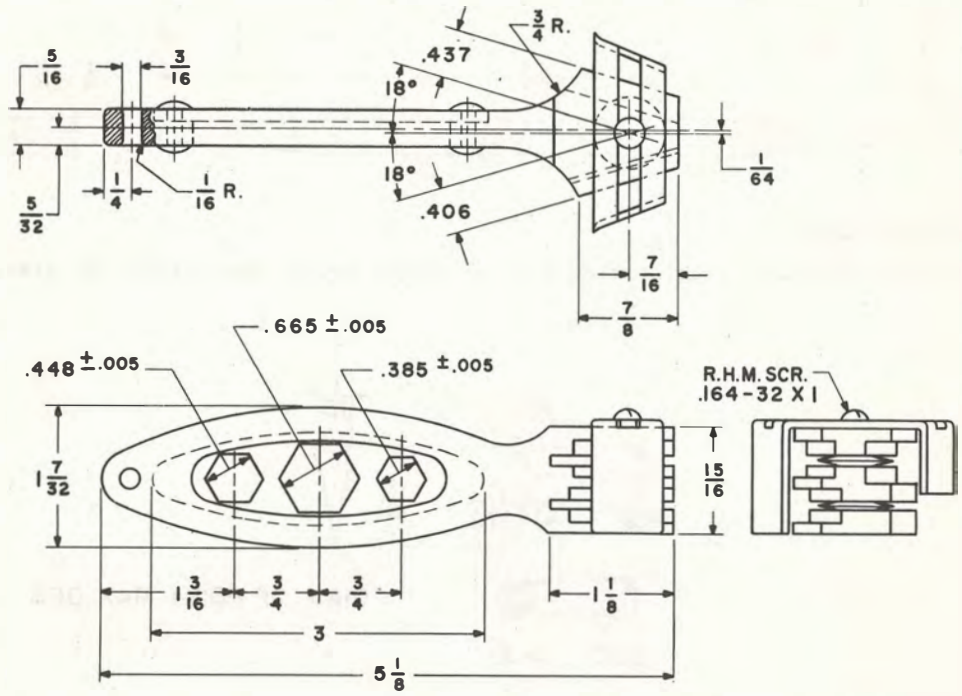

X-75515

R-1102 Fibre Spudger

Used for testing soldering connections, dressing skinners, etc.

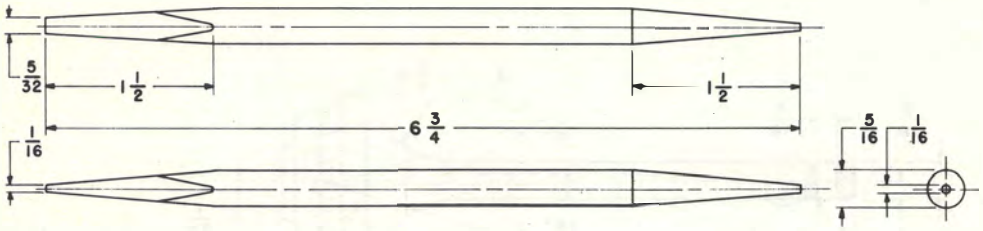

R-1808 Jack Lug Spudger

Used for cleaning holds in jack terminals of multiple cables when replacing disconnected wires.

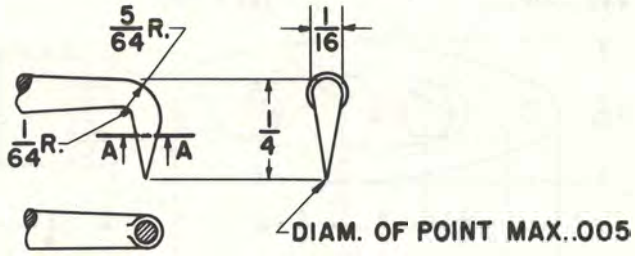

SECT. A-A

ENLARGED VIEW OF END

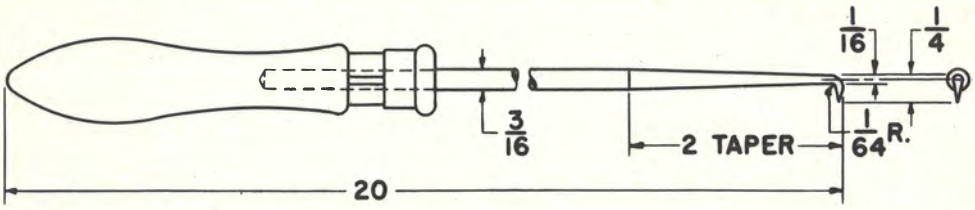

R-2039 Clamping Fixture for R-2039 Indicator

Used for holding the R-2040 dial-type indicator in a position to check play of one-type bearings and eccentricity of vertical drive shafts.

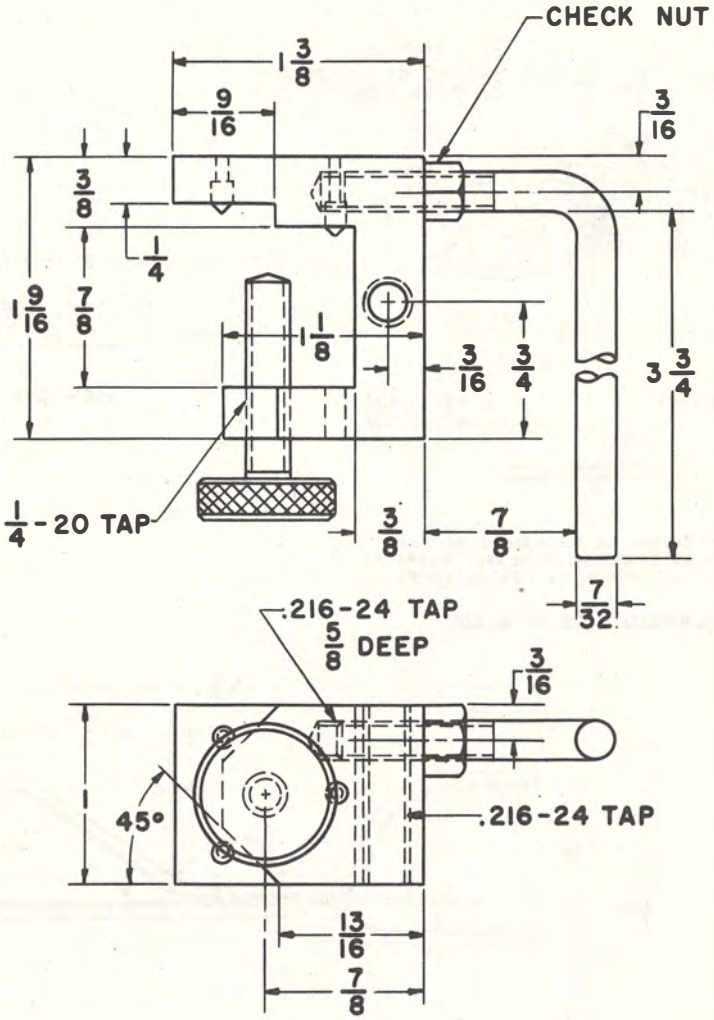

X-75515

R-2257 Loop Wire Puller

Used for pulling wires through fanning strip holes.

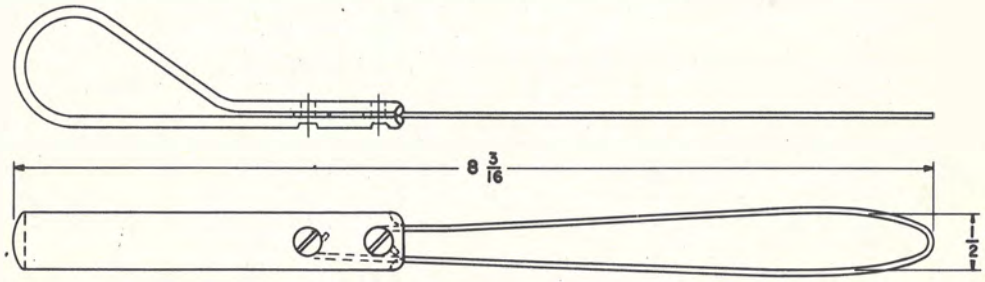

R-62267 Fabric Sheathing Cable Stripper

Used for stripping the sheathing on braided fabric covered cable.

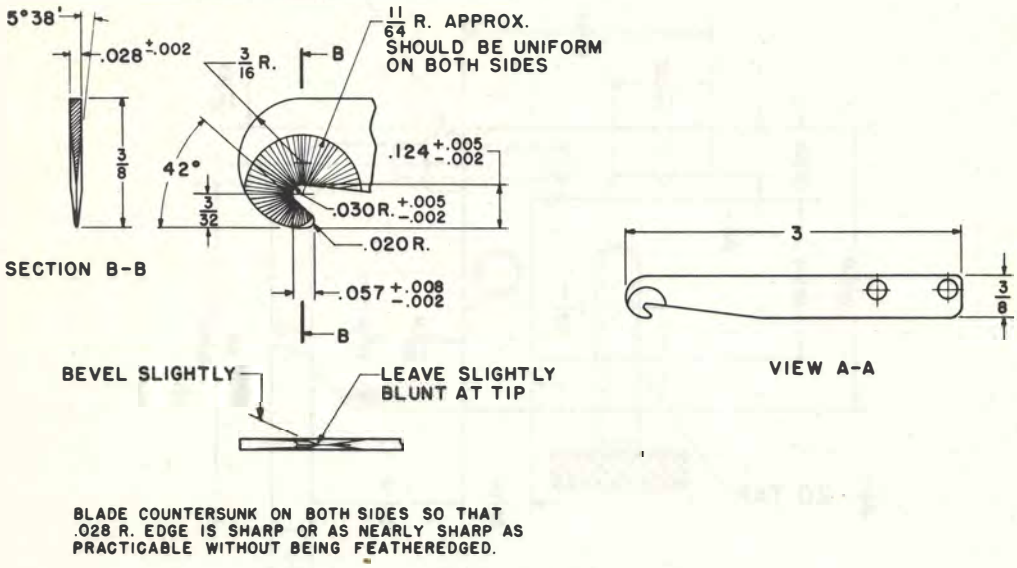

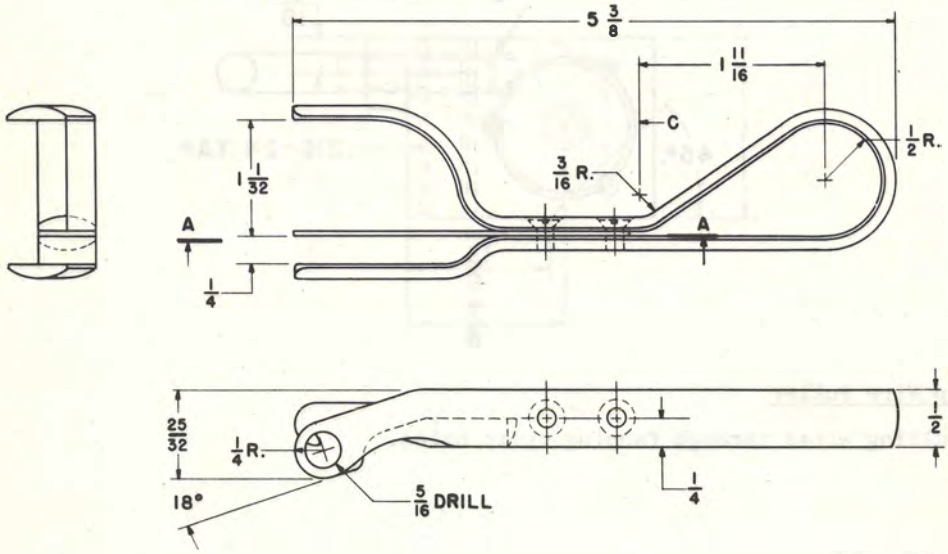

TOOLS FOR SPECIFIC APP
SECTIONS 15-19

X-75515

For General Purpose Tools used on Banks refer to individual subheadings such as wrenches, pliers, and adjusters.

230 Tool

Used in handling panel multiple banks. Two or more of these tools may be coupled together to obtain greater leverage.

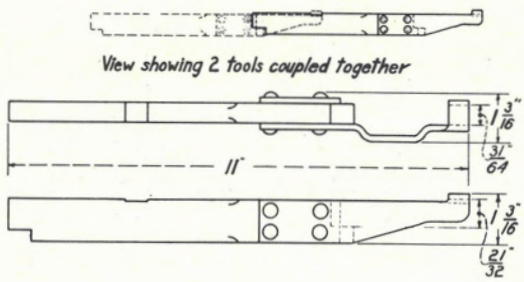

370A & 370B Tools

370A tool is used as a bank busying tool for 100-point banks in step-by-step dial equipments. The 370B tool is used as a bank busying tool for 200-point banks in step-by-step dial equipments.

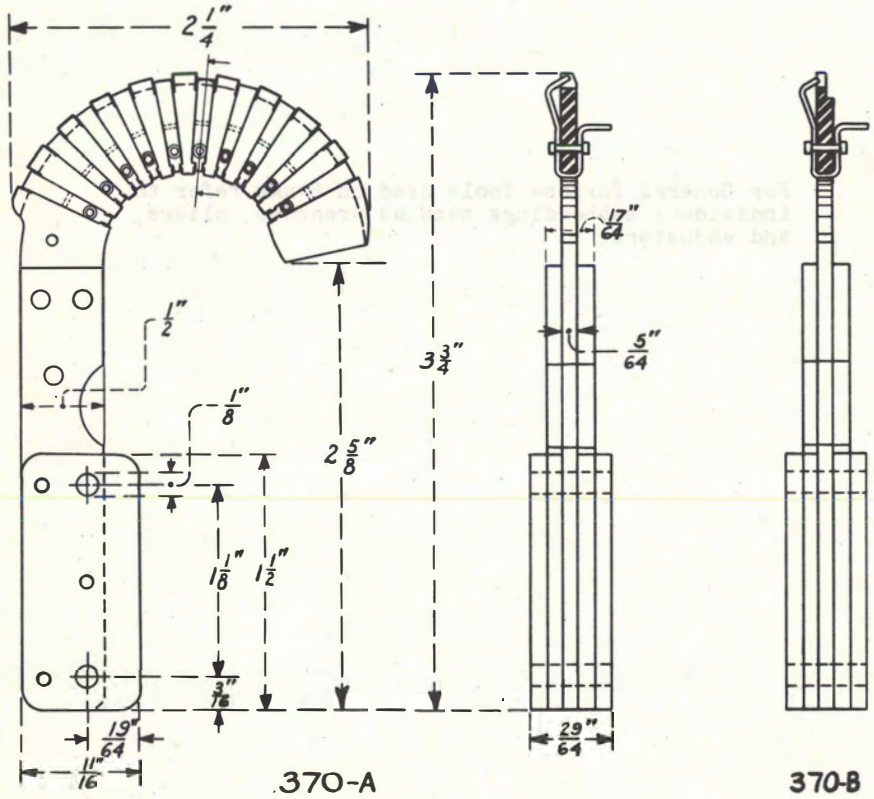

405 Tool

Used as a drift in adjusting position of line bank combs and of plunger-type primary, secondary, and out-trunk switches on their mounting screws.

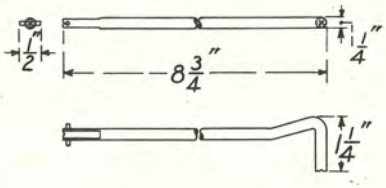

456A Tool

Used in adjusting the rear prongs of feeder brushes on the 26 and 27 banks.

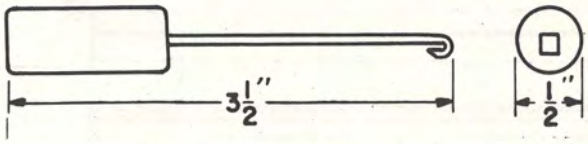

X-75515

526A Tool

Used as a holder for an oil-treated cloth for cleaning and lubricating silver-plated contacts 100-point and 40-point terminal banks in panel-type dial systems. An oil-treated cloth is required but not furnished.

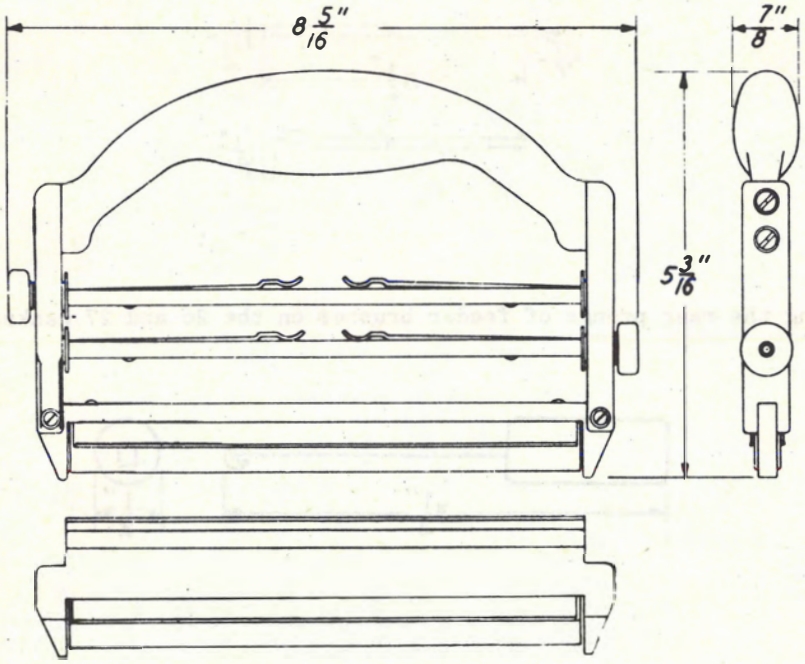

575A Tool

Used in replacing feeder springs of 26 and 27 banks. Consists of a metal plate on which are mounted two blocks of insulating material.

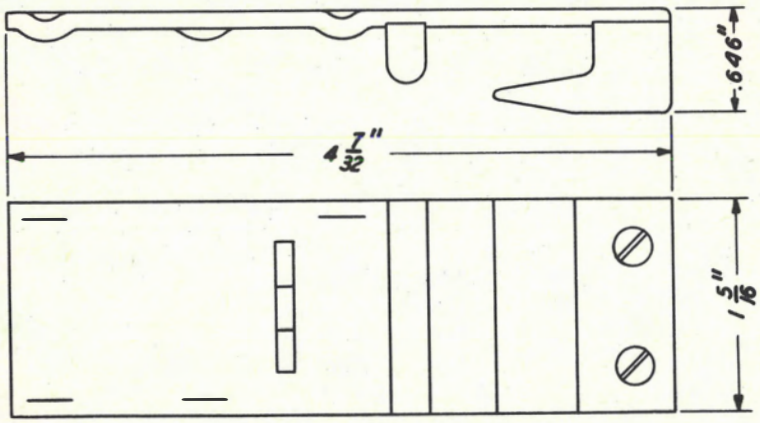

620 A Tool

Used in making electrical testing connection to the wiper side of bank terminals on line finder switches in step-by-step dial telephone systems. Handle is arranged for connection to a W3AJ cord.

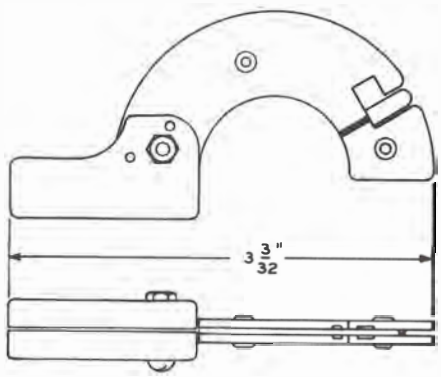

X-75515

For General Purpose tools used on Bearings and Drives refer to individual subheadings such as wrenches, pliers, and adjusters.

X-75515

322 Tool

Used for staking the inner race of one-type bearings to sequence switch driving shafts.

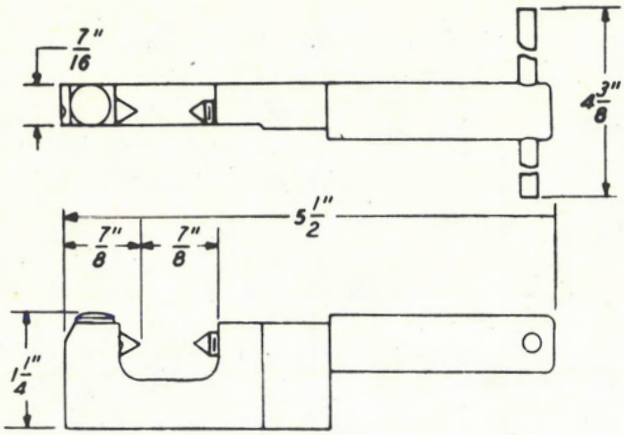

453A Tool

Used in replacing oil sight rings of drives and bearings used in dial systems.

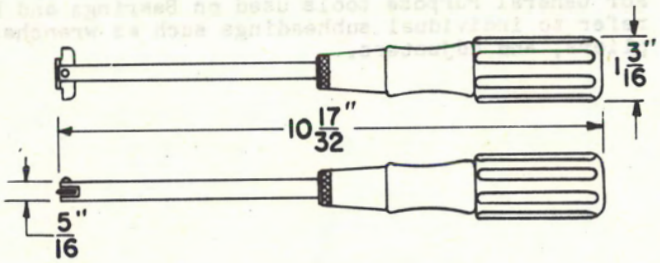

499A Tool

Used in reconditioning horizontal drive shaft couplings. Also used for removing or forcing in a bushing. Forms part of the 1002A tool kit.

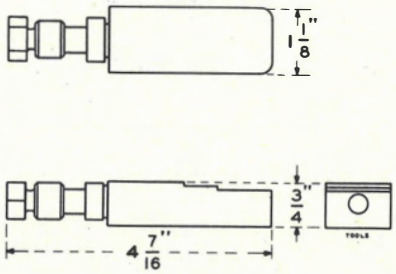

500A, 501A, and 502A Tools

Twist drills attached to special holders, one end of which is arranged to fit a standard brace and the other end fits in the sleeve of the 499A tool. Used in reconditioning horizontal drive shaft couplings. Form part of the 1002A tool kit.

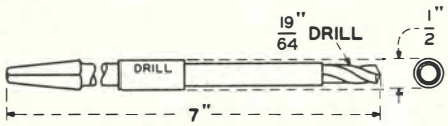

500 A

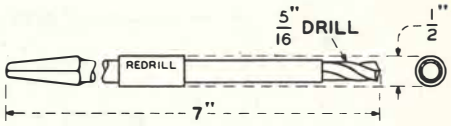

501 A

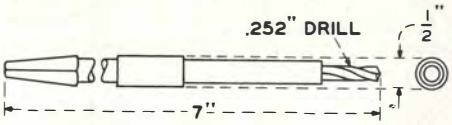

502 A

584A Tool

Used with gray, black, or white cloth tape for cleaning cork rolls on friction roll drives. Tape is not furnished as part of the tool.

X-75515

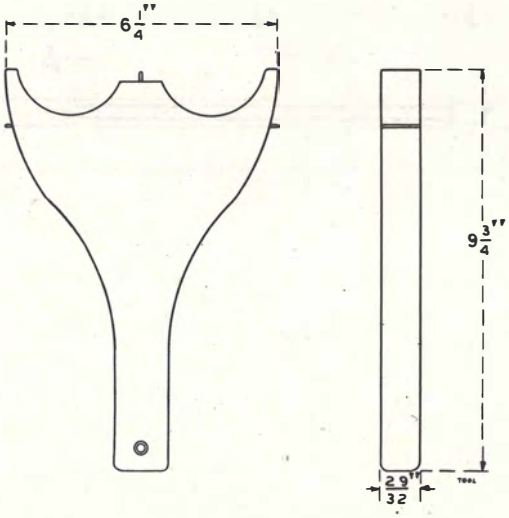

590A Tool

Used in restoring oil closure lip clearance for the shaft extension for bearing boxes of friction roll drives. A canvas carrying case is furnished as part of this tool.

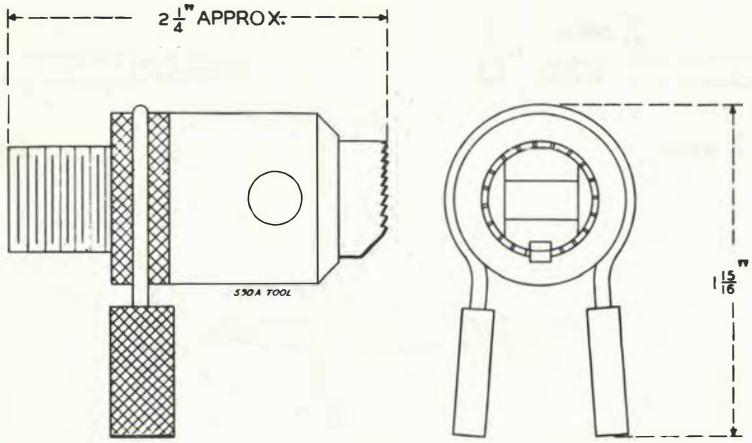

D-87464 Special Reamer

Used in line reaming replacement bearings of 5- and 6-type distributors in the field.

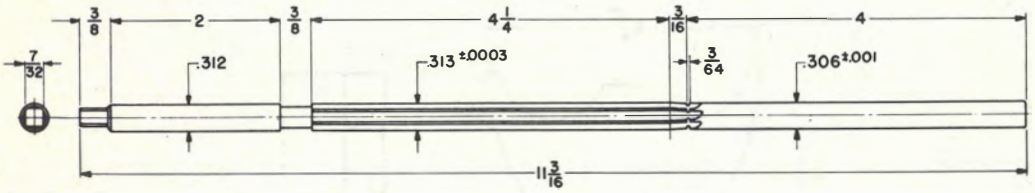

For General Purpose tools used on Clutches, Brushes, etc. refer to individual subheading such as wrenches, pliers, and adjusters.

X-75515

335 Tool

Used in adjusting up-drive armature frontstop lugs on clutches.

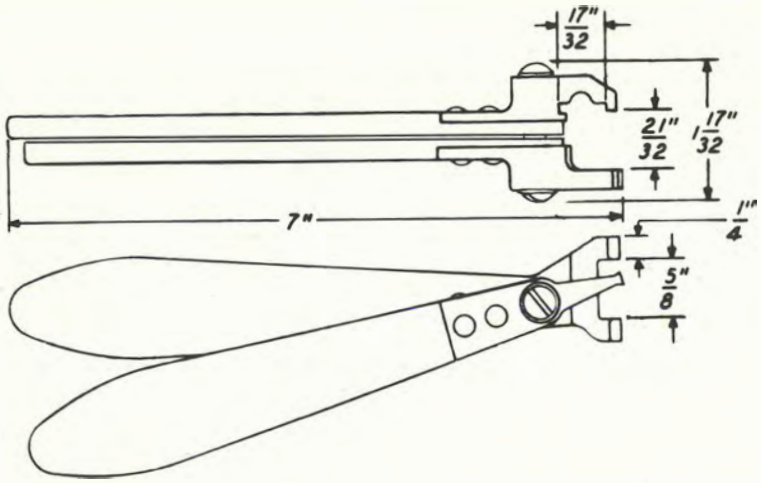

337 Tool

Used in placing a 500-ohm-to-ground connection on the ring spring of panel-type line finder multiple brushes when making service observing tests.

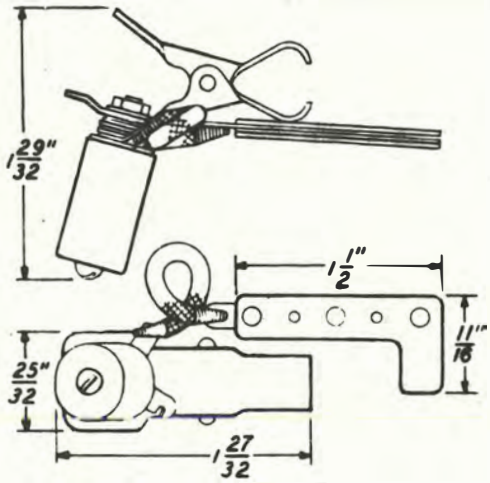

382A Tool

Used in panel-type systems for holding horizontal-type trip rods while adjusting the trip fingers and the trip finger backstops.

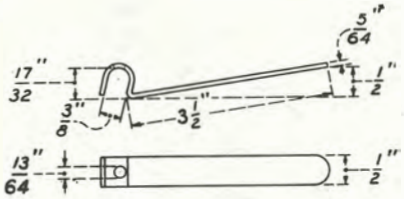

396A Tool

Used on district, office, and incoming frames in holding the elevator rod assembly while adjusting the vertical location of bridging-type multiple brushes having a 0.075-inch travel adjustment.

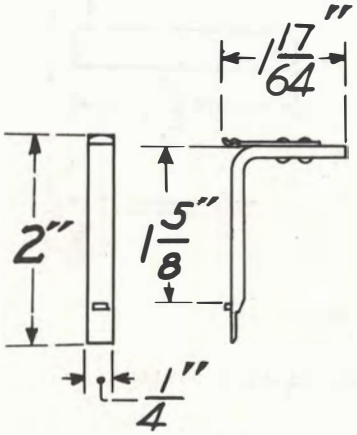

X-75515

400A Tool

Used in spreading the springs on 10- and 14-type brushes to facilitate mounting commutators or brushes.

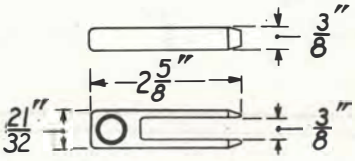

404A Tool

Used on cordless B sender frames in holding the elevator rod assembly while adjusting the vertical location of multiple brushes having 0.100-inch travel adjustment.

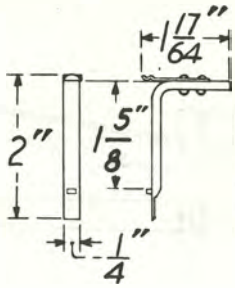

458A Tool

Used with the 121A gauge for adjusting clutches in panel-type dial systems. It is used for transmitting the movement of the clutch armature extension to the spindle of the gauge.

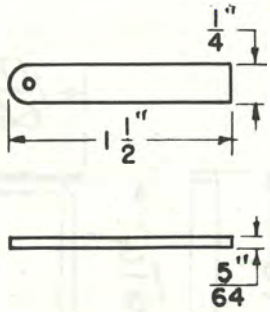

467A Tool

Used in adjusting nuts on clutches in dial systems.

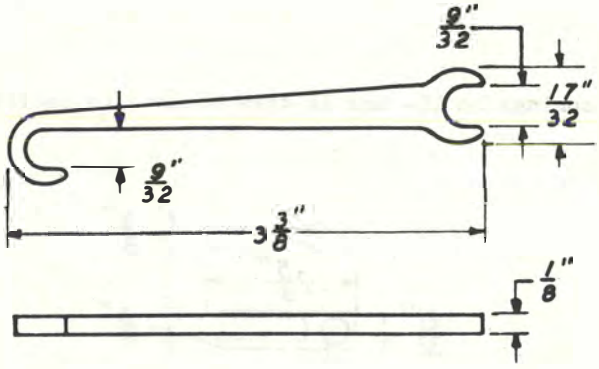

613A Tool

Used in temporarily locking the commutator brush to the associated elevator rod in panel-type central offices.

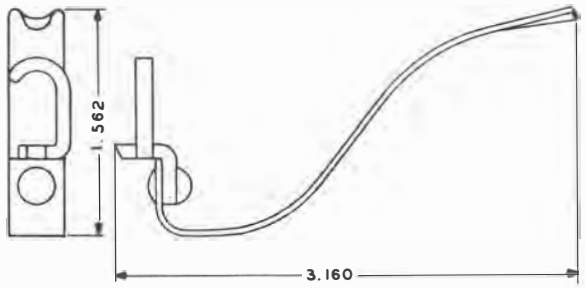

X-75515

For General Purpose tools used on Cords refer to individual subheadings such as wrenches, pliers, and adjusters.

X-75515

312 Tool

Used in repairing switchboard cords by the punched hole method. The handle of the tool is arranged to rotate on its longitudinal axis so that in one position marked L, the blade at the left is set to cut the braid of the cords used with the 310-or similar-type plugs and in another position marked S, the blade is set to cut the braid of the cords used with the 309- or similar-type plugs.

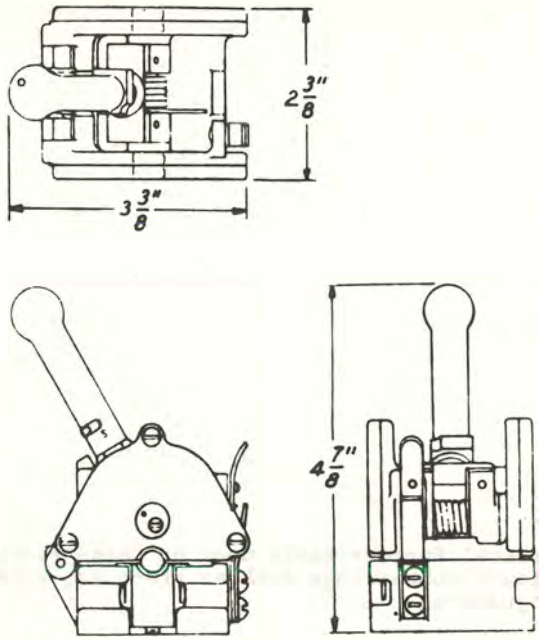

312B Tool

Used in connection with the solderless cord tip method of repair. The handle is operated in the same manner as that of the 312 tool.

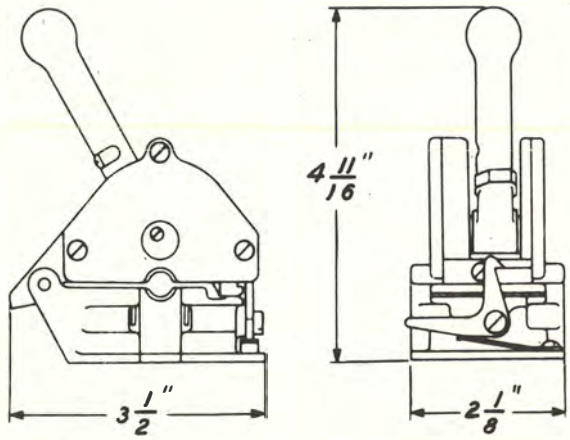

313 Tool

Used in repairing tinsel switchboard cords. Consists of a clamping bar and a hollow shaft provided with a cutter and handwheel all of which are mounted on a black metal base.

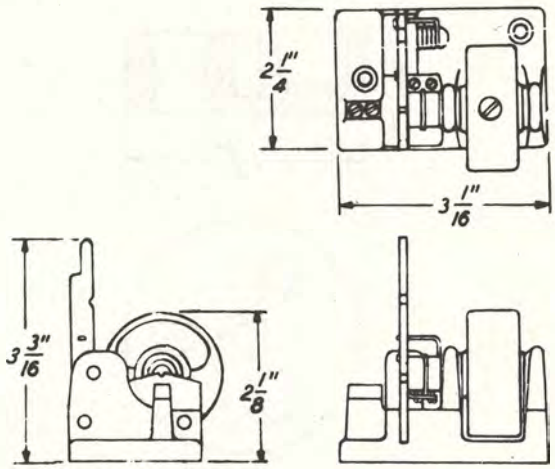

444A Tool

Used in repairing switchboard cords by the solderless cord tip method. Consists essentially of a metal housing in which is assembled a set of dies and a mechanism for operating the dies. A metal handle is provided for operating the mechanism.

X-75515

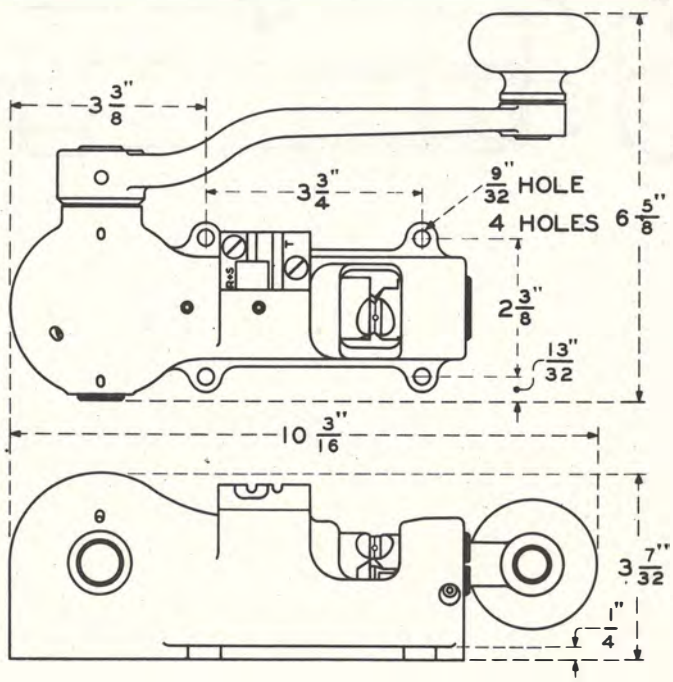

515A Tool

Used in placing cushions on cords in conjunction with the 557A tool. Nickel-plated metal disc.

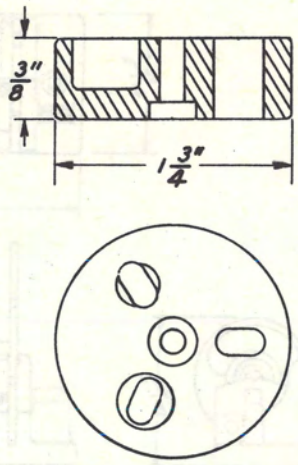

516A Tool

A small screw jack used in separating the sealed joint between the ticket tube flange and the 28A valve flange to permit removal of the cutoff valve section the 28A valve.

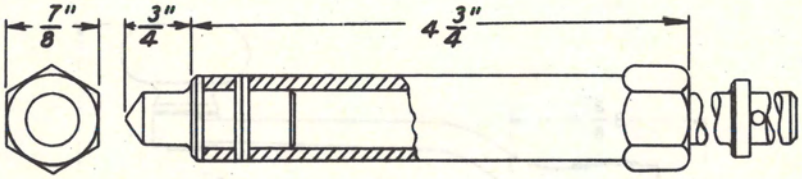

557A Tool

Used in applying the 1A and 2A cushions on switchboard cords equipped with 309 and 310 plugs. Used in conjunction with the 515A tool.

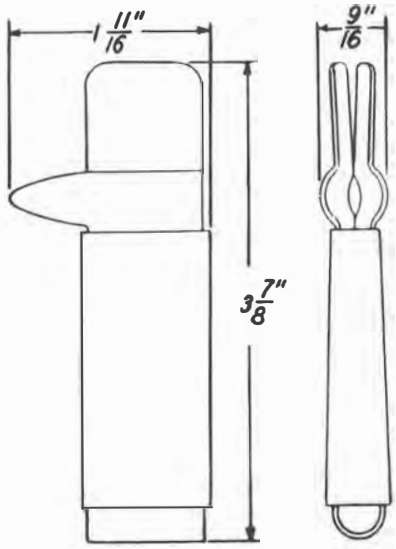

X-75515

For General Purpose tools used on Jacks refer to individual subheadings such as wrenches, pliers, and adjusters.

X-75515

124 Tool

This tool is a sleeve terminal locking tool. It is used to twist the sleeve terminal to lock the sleeve in position.

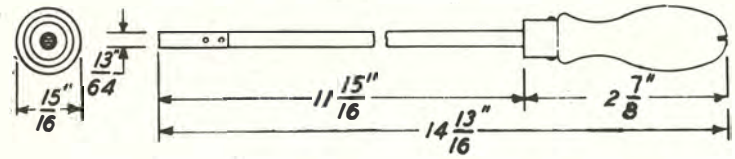

274 Tool

Used in extracting signal plugs from the multiple jacks. For the description of the 274 tool see section on Extractors.

407A Tool

This tool is for removing the worn sleeve from the 49- and 141-type jacks without removing the jack strip from the switchboard. When replacing the 49-type jack sleeves it is used in connection with the 124 tool.

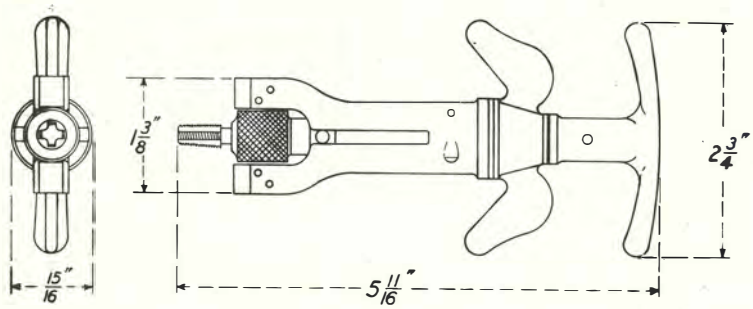

408A Tool

This is for counterboring jack mountings to accommodate the shoulder of a replacement sleeve for the worn jack.

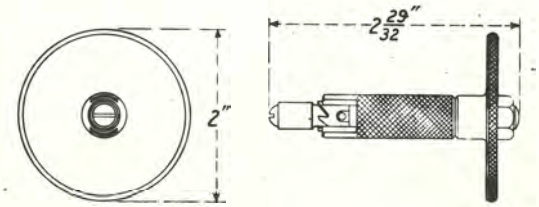

409A Tool

Designed for crimping the sleeve of the 49- and 141-type jacks in the jack mounting when jacks with worn sleeves are to be replaced.

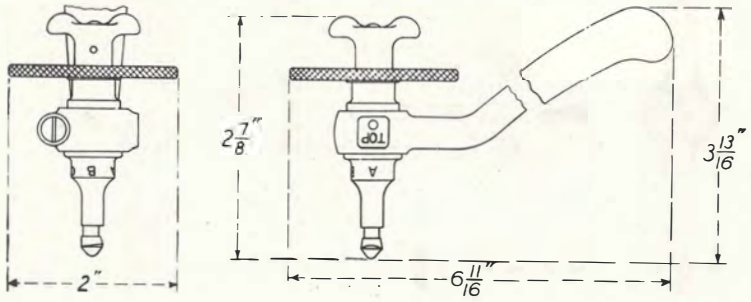

463A & 464A Tools

Used for applying multiple marking paints to jack mounting strips. 463A Tool (diameter A - 13/64 inch) is for use with strips containing 92-type jacks; 464A Tool (diameter A - 1/4 inch) for those containing 49- or 141-type jacks.

X-75515

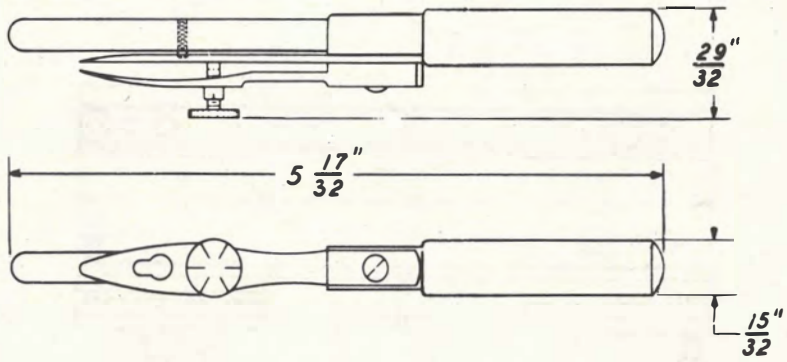

465A Tool

The purpose of this tool is for stirring paints and filling the pen of the 464A tool.

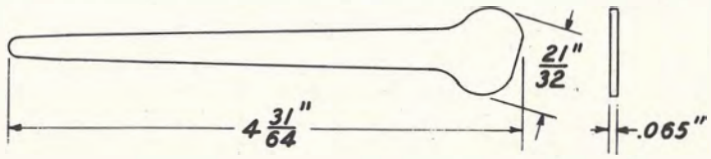

478A Tool

Used with the 345 tool for removing worn sleeves from the jack. For the description of the 345 tool see section on pliers.

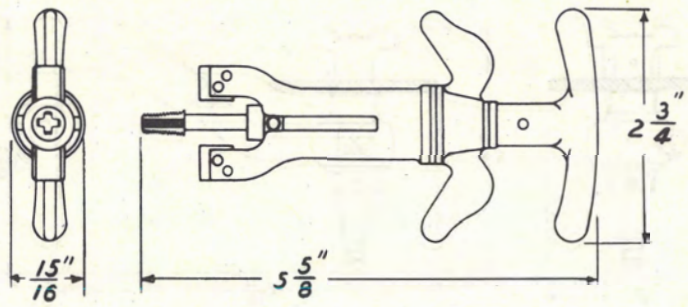

585A Tool

Clamp used on 113- and similar-type jack mountings while replacing jack sleeves. Consists of two steel strap assemblies held together by thumb screws at each end. A knob is provided at each end which can be set in either of two positions to adjust the tool opening for a jack mounting with or without a holly strip.

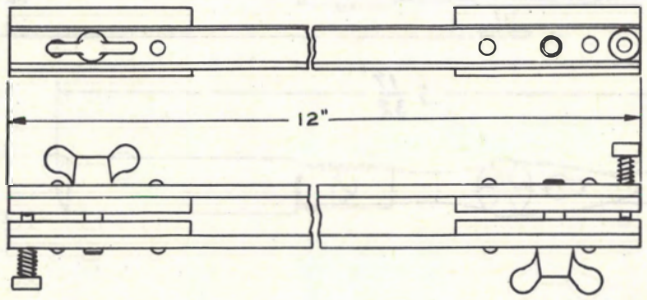

TOOLS FOR SPECIFIC APP
SECTIONS 20-25

TOOLS FOR SPECIFIC APP
SECTIONS 20-25

PLUGS

For General Purpose tools used on Plugs refer to individual subheadings such as wrenches, pliers, and adjusters.

X-75515

274 Tool

Used in extracting signal plugs from the multiple jacks. For the description of the 274 tool see section on extractors.

316 and 317 Tool

These tools are used for removing the plugs from or for attaching them to the cord. The 317 tool is arranged for the 347 plug.

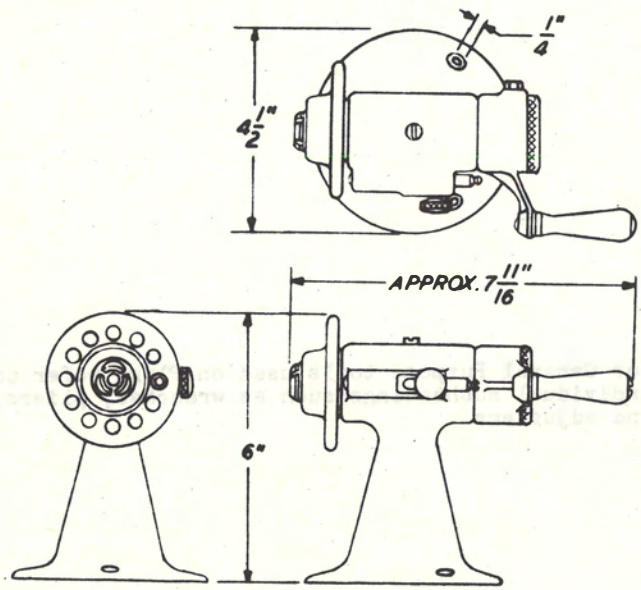

318 Tool

A chuck arranged to grip the stop shoulder of a 347-type plug.

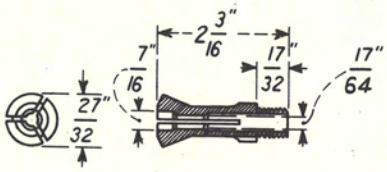

384A Tool

This tool is used for cleaning plugs.

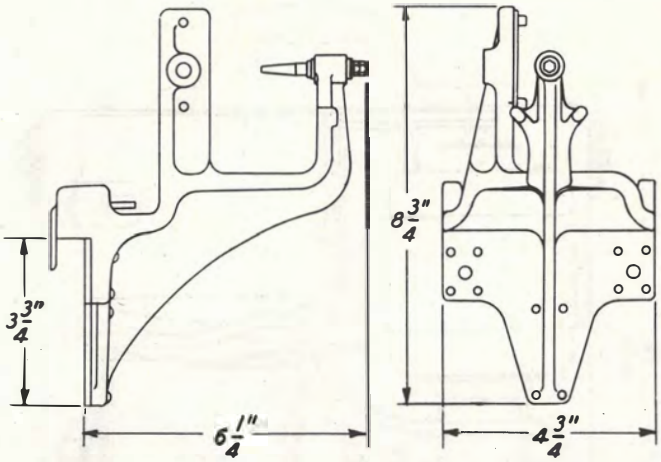

385A and 385C Tools

Used in conjunction with a 384A tool for holding a plug. 385A Tool holds a 347-type plug. 385C Tool holds 309- or 310-type plugs.

X-75515

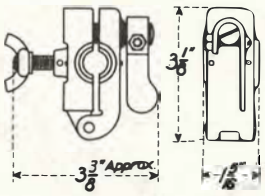

385B Tool

Same as 385A Tool except arranged for 137-type plug.

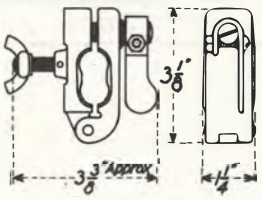

497A and 497B Tools

Used for cleaning plugs at telephone switchboards. A Bristo No. 6 wrench is furnished.

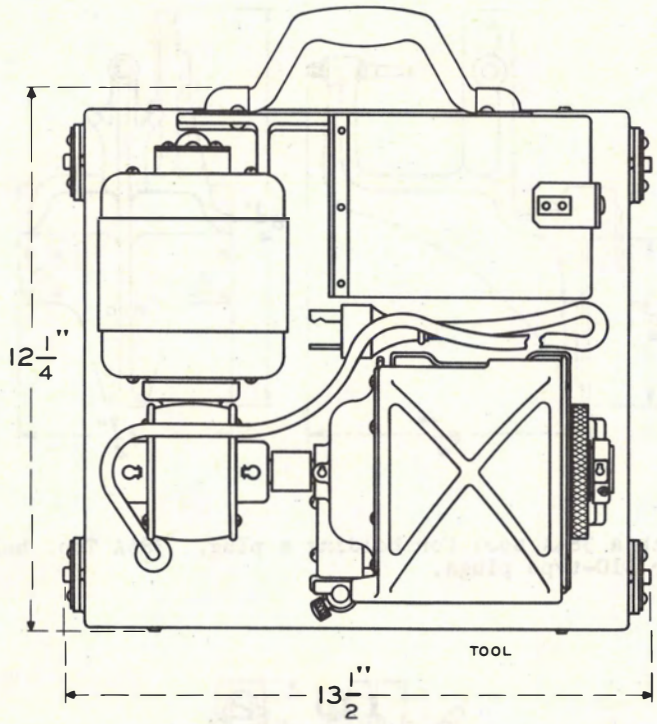

COVER REMOVED

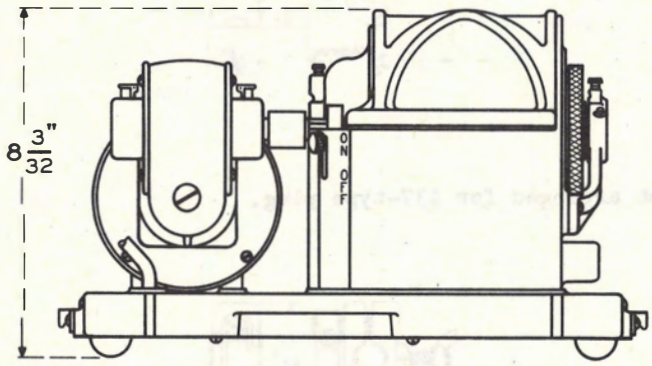

498A, 498B and 498C Tools

These are adapters arranged to hold the contact surfaces of the plugs between the cleaning discs of the 497A and 497B tools.

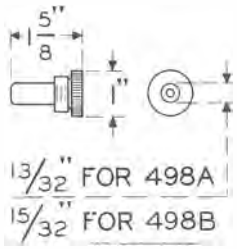

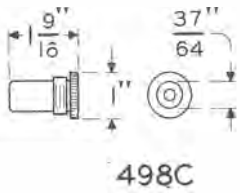

605A Tool

Used in maintaining concentricity between the center contact and the body of a 337-type plug while soldering the plug to the center conductor of a coaxial cable. Consists of a metal rod, one end of which is recessed to engage the body of the plug and to restrict the angular displacement of the center conductor,

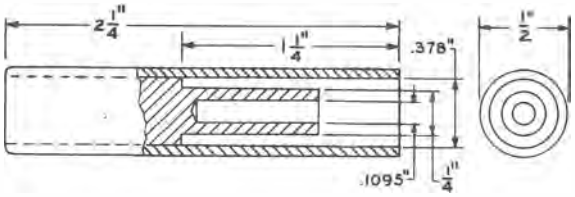

X-75515

For General Purpose tools used on Relays refer to individual subheadings such as wrenches, pliers, and adjusters.

X-75515

369B Tool

Used for testing the bridge cutoff winding of the B relay associated with the primary line switch in step-by-step dial systems. Consists of a metal tube in which are assembled a coil having two resistance windings (total 1372 ohms) connected in series, two contact plates which project beyond one end of the tube, and a push button for short circuiting one of the resistance windings giving a total resistance of 562 ohms.

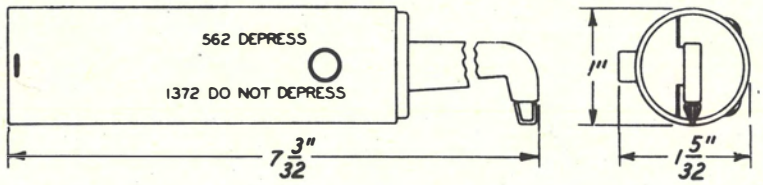

419A Tool

See under TEST PICKS AND CONNECTING TOOLS - Section 12 Page 3.

436A Tool

Used as a spacer for obtaining the armature heel gap of 221- and similar-type relays.

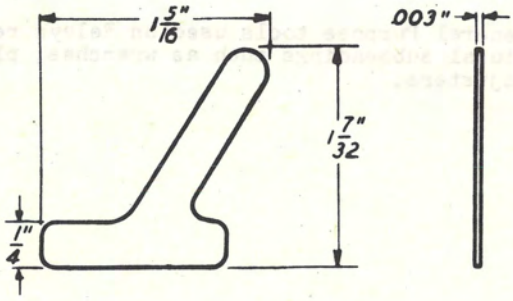

484A Tool

Magnetic shunt adapted to bridge across the magnet structure of a relay. Used in adjusting 209- and 215-type relays.

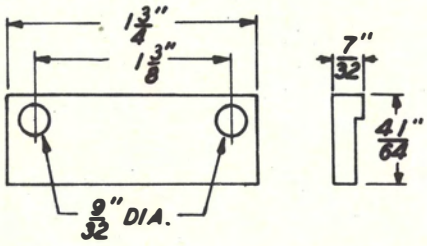

527A Tool

Used for removing built-up material from precious metal bar or point-disc-type contacts of either single or bifurcated springs on relays. Consists of a handle of transparent plastic with two folding blades equipped with replaceable files.

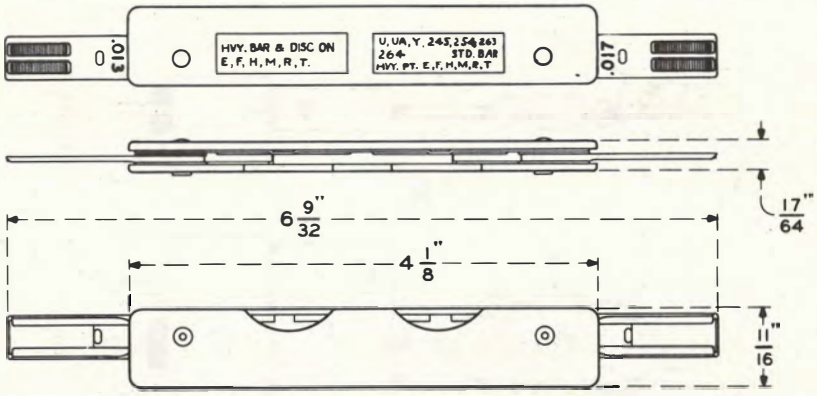

537A Tool

See under ADJUSTERS AND BENDERS - Section 1 Page 25.

X-75515

547A Tool

See under TEST PICKS AND CONNECTING TOOLS - Section 12 Page 5.

569A Tool

Used in keeping the armature studs clear when reinserting the armature of the 263- and 264-type relays in crossbar dial systems. Made of fibre.

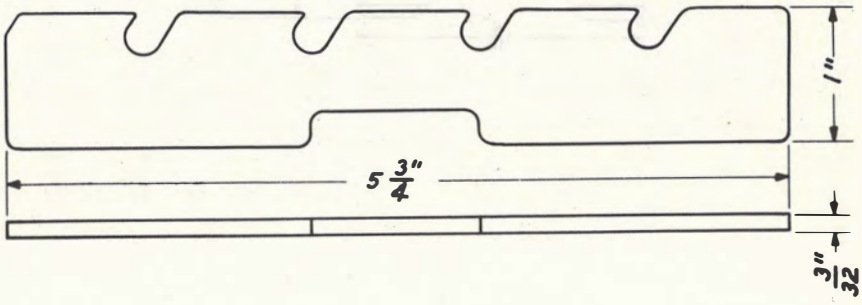

587A Tool

Consists essentially of a spring clip connected to a translucent body containing two El lamps and a base containing three terminal pins. The body is divided by a partition so as to eliminate light indication interference between the lamps. Used for indicating contact closure when adjusting 206-type relays.

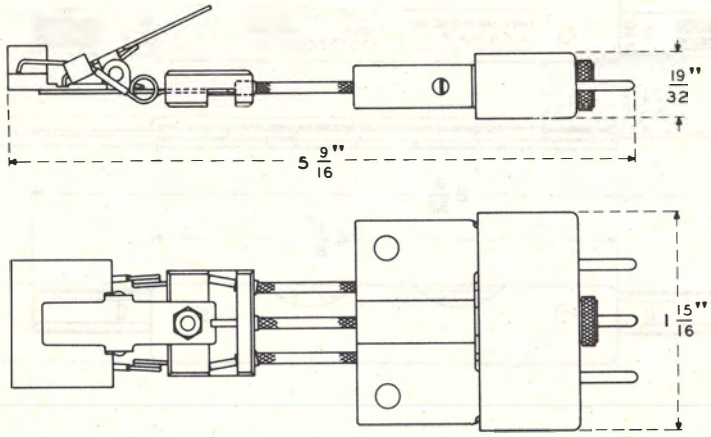

601B Tool

Used in holding open the line contacts of the U676 and U680 relays without operating the relays in step-by-step dial telephone systems. Made of insulating material.

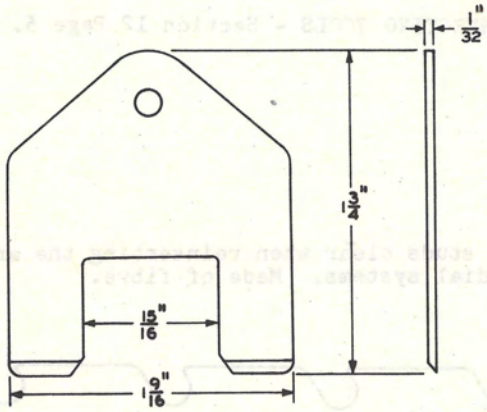

611A Tool

Used in bending the legs of the hinge brackets of U- and Y- type relays to compensate for wear at the hingepins by raising the armature clear of the top edge of the front spoolhead. Consists of a metal handle that is insulated, with one end shaped to fit over the hinge brackets.

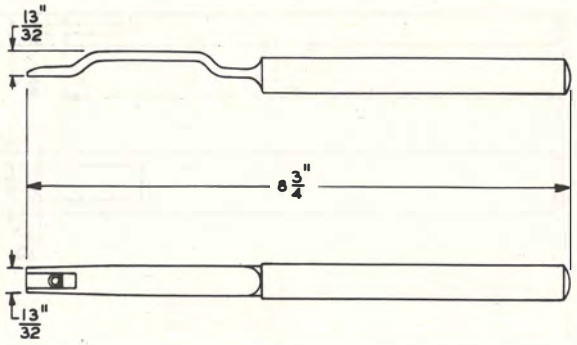

612A Tool

X-75515

Used for supporting mounted U- and Y- type relays while adjusting the hinge bracket with the 611A tool. Consists of an insulated metal handle equipped at one end with a metal piece formed to fit over the cores of the relays.

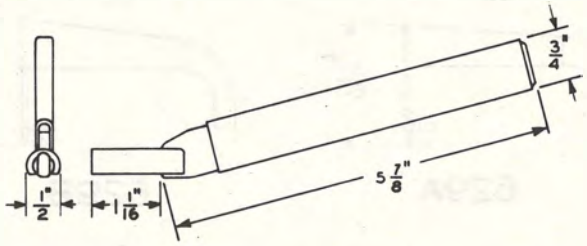

614A Tool

Metal bar used in removing the cards from UB-type relays.

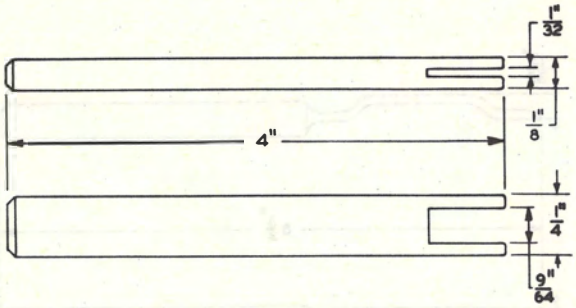

629A and 629B Tools

Metal spring holders arranged to clamp onto the core plate of wire spring relays and slotted to engage the movable springs on the right-hand side of the fixed springs. Used in wire spring relays in conjunction with the 630A tool to guide the movable springs during the removal of the cards. The 629A tool engages springs in positions 7 through 12, and the 629B tool engages springs in positions 1 through 6.

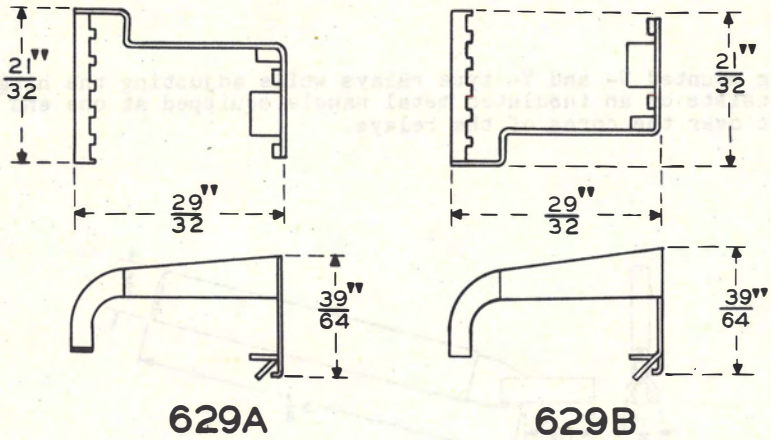

630A Tool

Metal spring holder slotted to engage the movable springs on the left-hand side of the fixed springs in wire spring relays. Used in conjunction with the 629A and 629B tools in wire spring relays to guide the movable springs during the removal of the cards.

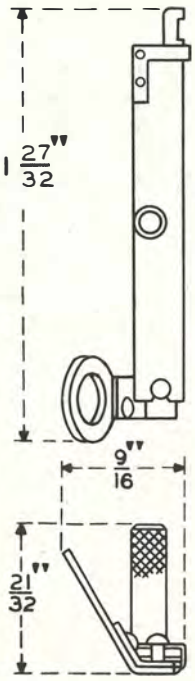

X-75515

651A, 651B, and 651C Tools

Molded Plastic covers with a series of holes. Used in conjunction with the 639A & 360 type tools for making connections to the stationary contacts on wire spring relays.

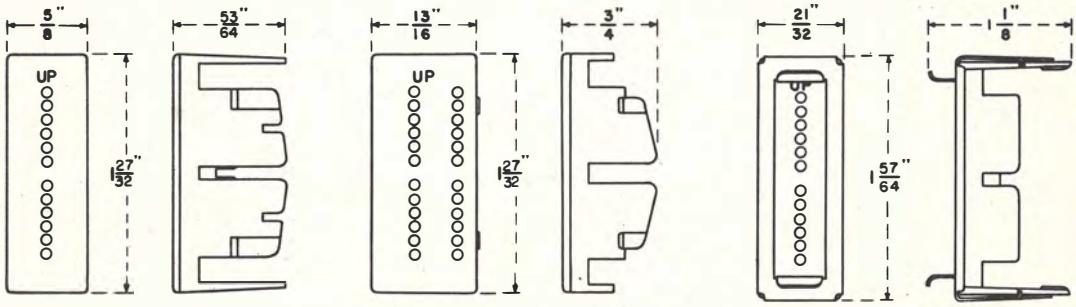

651A 651B 651C

652A and 652B Tools

Formed wire holders used in conjunction with the 630A tool to engage the movable springs during removal of the cards from wire spring relays. The 652A tool is formed to engage one half of the movable springs nearest the armature and the 652B tool the other half of the movable springs nearest the armature,

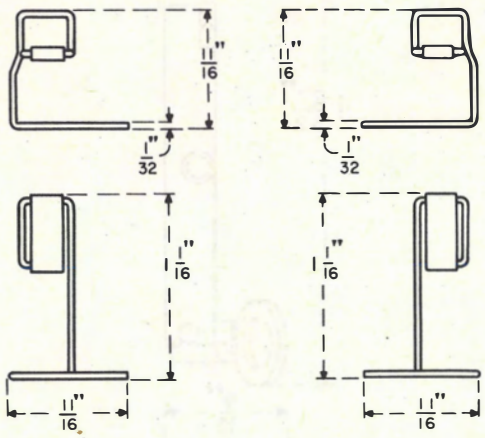

652A 652B

654A, 654B, and 654C Tools

Two polyvinyl-covered wire prongs joined by a polyvinyl-covered chain used in extracting 289-, 290-, and 293-type relays, respectively in AMA and No. 5 Crossbar Systems.

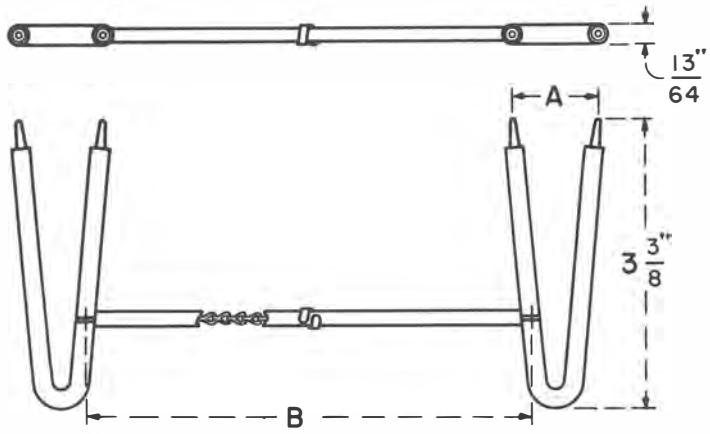

Code No.	Dimension A	Dimension B
654A	1.093	3-7/8
654B	0.625	5-1/4
654C	0.850	4-5/8

X-75515

655A Tool

Flat file with an insulated handle and a formed cutting end. Used for removing contact build-up on the 12- and 24- contact wire spring relays.

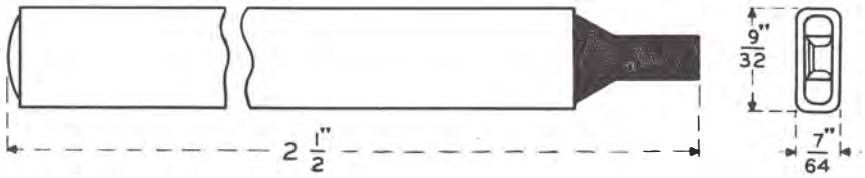

For General Purpose tools used on Selectors refer to individual sub-headings such as wrenches, pliers, and adjusters.

X-75515

144 Tool

A combination socket wrench and screwdriver used to adjust 60-type selectors. The hexagonal socket at one end is provided with a spring to hold the nut in the socket and is used with the aid of the socket wrench portion of the 145 tool to adjust the code pins on the code wheels. The other end is beveled to adjust the screws on the ringing terminals.

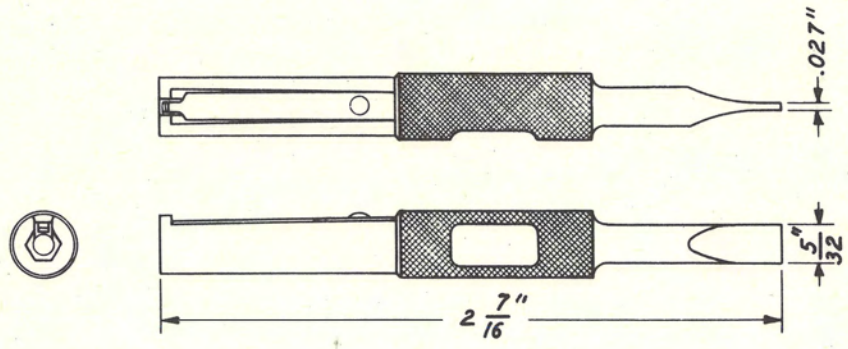

145 Tool

Used to adjust 60-type selectors. Consists of a combination socket wrench at one end to adjust the code pins on code wheel with the aid of socket wrench portion of the 144 tool, a slot for adjusting contact and holding springs at same end, and a wire hook at other end to adjust code wheel spring.

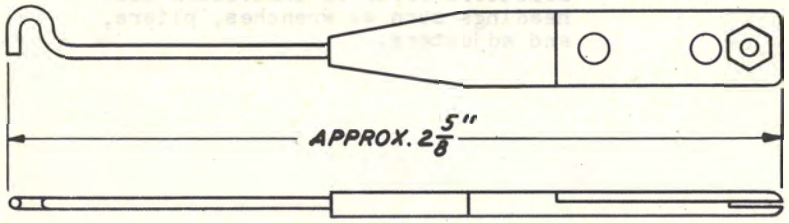

395A Tool

Used to facilitate the replacement of the rotor brush assembly of selectors when assembled with their associated banks or the mounting of detachable feeder brush units on selectors.

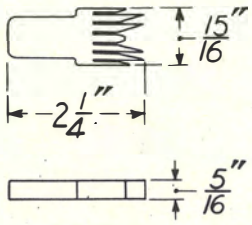

425A Tool

Used in holding loosely mounted 206-type selectors in rigid position while adjustments are being made.

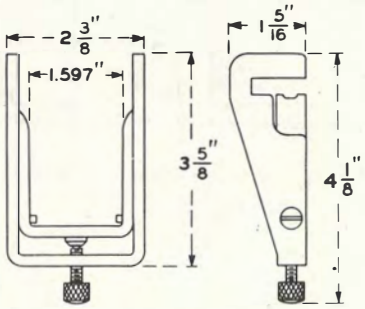

468A Tool

Used in holding rotor hubs of 206-type selectors and 25-point rotary switches while cleaning the brush contact paths.

X-75515

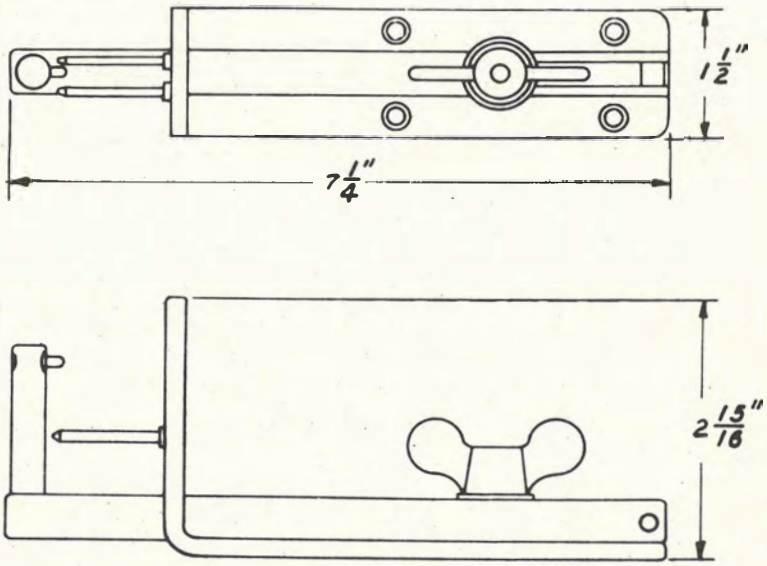

622A Tool

Used as a clamp in adjusting 206-, 209-, 211-type selectors which are mounted on mounting plates by means of 5-type apparatus mountings. Consists of a base and a sliding jaw.

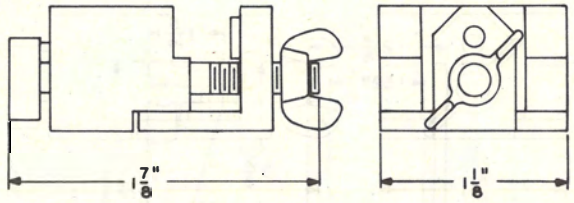

For General Purpose tools used on Station Apparatus refer to individual subheadings such as wrenches, pliers, and adjusters.

X-75515

139 Tool

Used in leveling coins in coin collectors when the coin box becomes so full as to interfere with operation of collector.

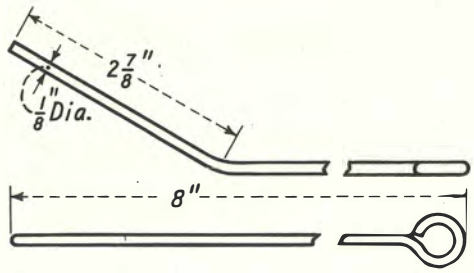

260 Tool

Used in machine switching equipments for holding the rotating parts of 5-type dial governors stationary when adjusting them for speed.

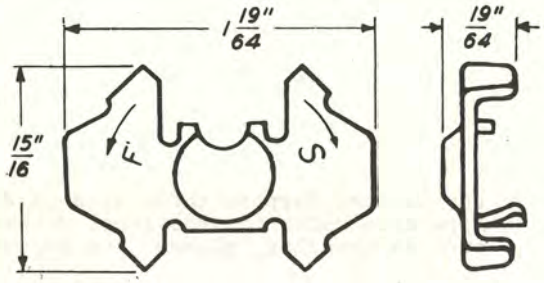

377A Tool

Used as a stop in 5-type dials for repeat dialing of the same digit during testing operations in step-by-step systems.

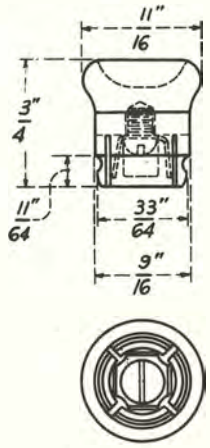

430B Tool

Used in short-circuiting terminals in handsets when testing with a test set.

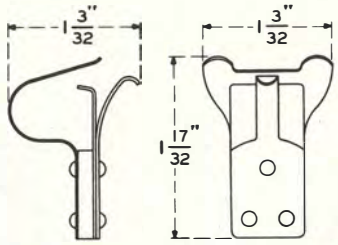

440A Tool

Used in removing and replacing the plugs of transmitter units.

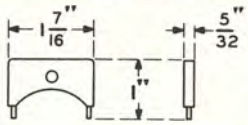

445A Tool

Used in removing and replacing the card holder frames of 5-type dials and apparatus blanks in dial systems.

X-75515

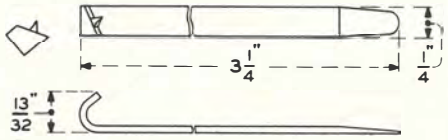

460A Tool

Used to facilitate the removal of lock rings that have become jammed on the cases of transmitter units.

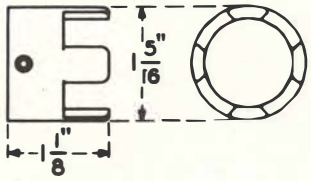

473A Tool

Used in conjunction with the 121A gauge for checking the contact separation of reciprocating bar-type interrupters.

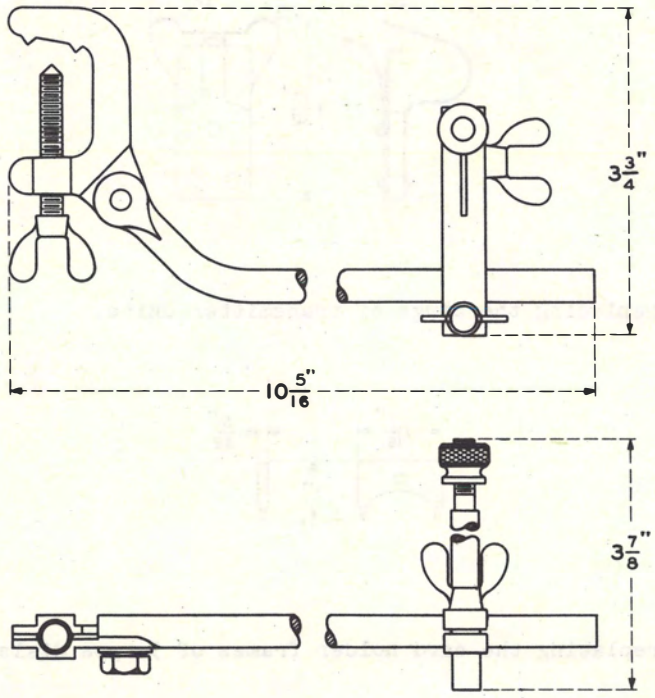

481A Tool

Horseshoe-shaped permanent magnet with adjustable pole pieces used to remagnetize ringer magnets without removing the ringer from the set. Furnished in a metal carrying case.

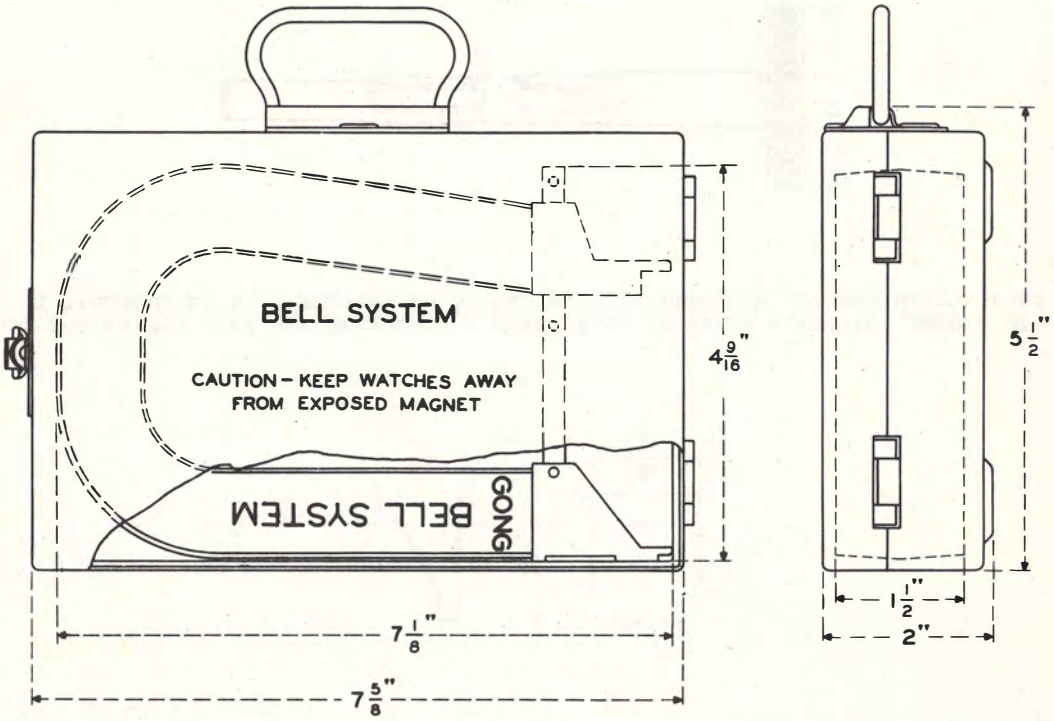

X-75515

491A Tool

Used in line reaming the bushings of reciprocating bar-type interrupters. Has two sizes of reamers. Part of the 1000A tool kit.

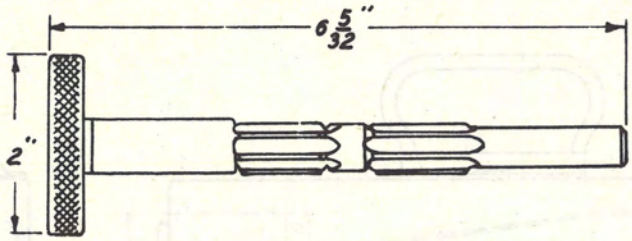

529A Tool

Used in coin collectors not equipped with refunding mechanisms. It is inserted in the top of the coin hopper to retain coins or slugs used in checking the coin chutes and coin signals.

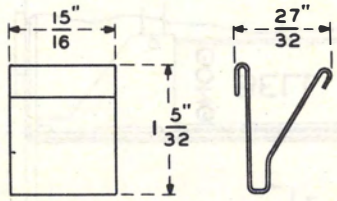

567A Tool

Used in assembling the 101A pad to the 104A adapter.

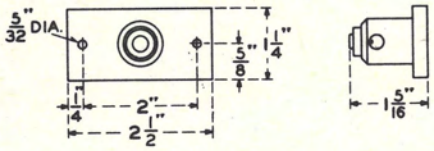

617A Tool

Used in replacing coin collector switchhook arms. Consists of a bracket of insulating material equipped with a half metal spacer on the inside corner.

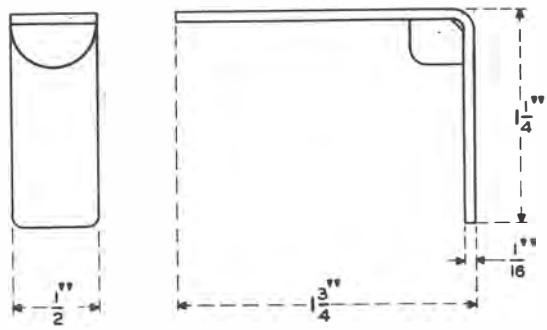

641A Tool

Metal rod, cone shaped at one end and threaded at the other end. Used as an aligning guide to facilitate mounting of 4-and 5-type dials being assembled on coin collectors.

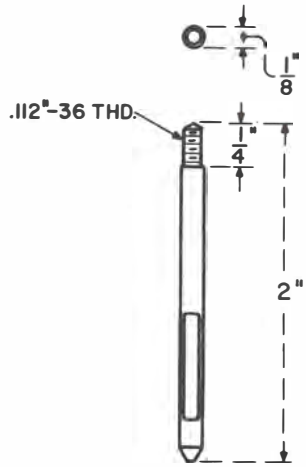

X-75515

For General Purpose tools used on Switches refer to individual subheadings such as wrenches, pliers, and adjusters.

X-75515

203 Tool

Used for holding the indicating wheel to prevent camshaft from turning when wrench is used on the cam clamping nut of an assembled camshaft. Also for use on the 155A and 157A interrupters.

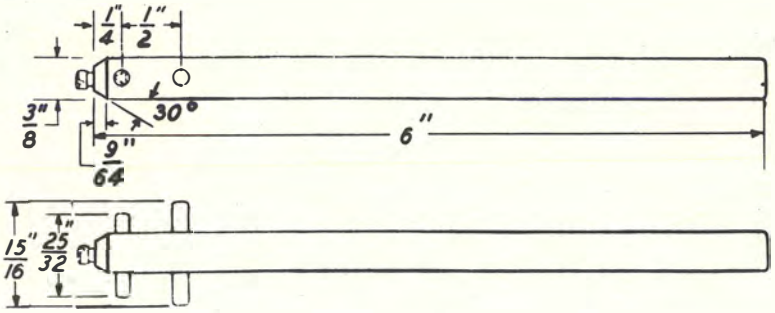

218B Tool

Used in short circuiting the A cam of sequence switches used in panel-type equipments in order to run the switch continuously for wearing in the discs, cleaning, or other purposes. Also for use on the 155A and 157A Interrupters.

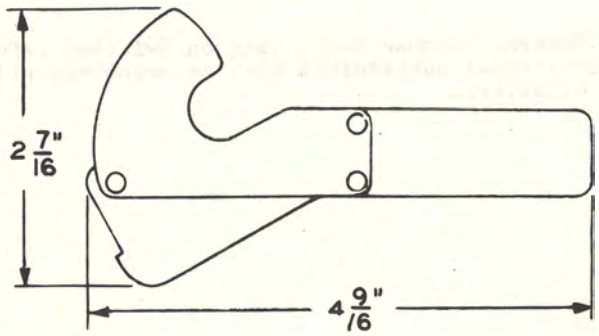

225B Tool

Used in removing and replacing the cams of sequence switch camshaft assemblies in panel-type dial systems.

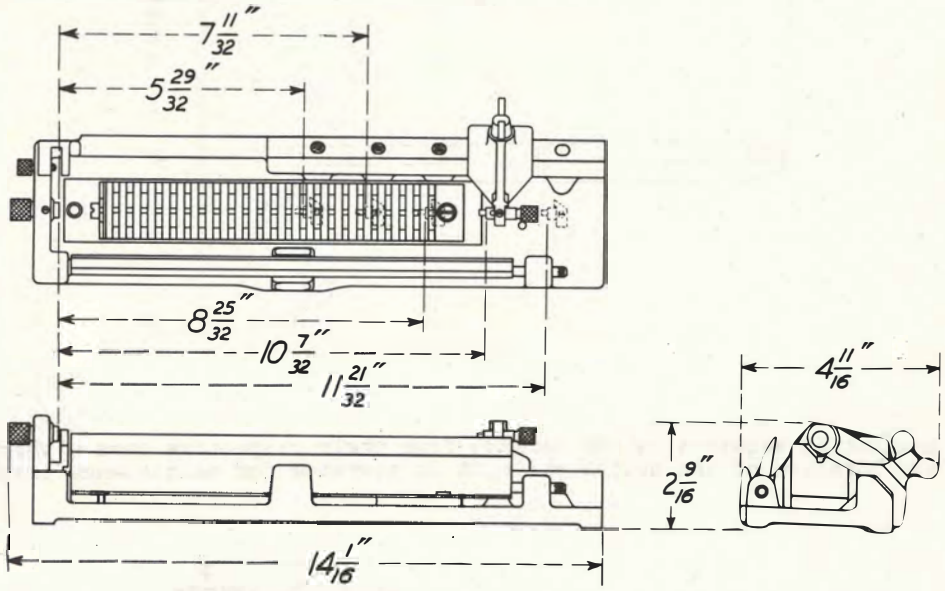

X-75515

253B Tool

Used as a brake in panel-type dial equipment to prevent switch from being operated during test.

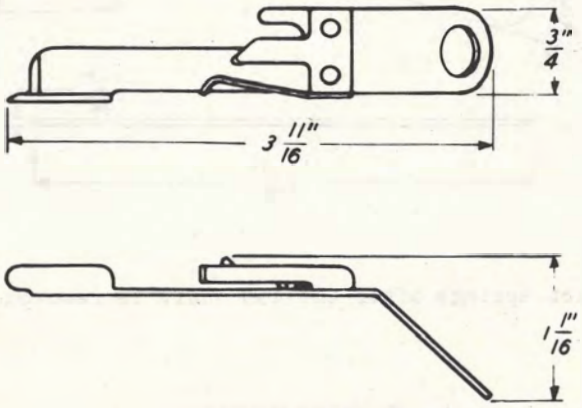

258 Tool

Used in machine switching equipments as a temporary shaft for holding the cams and collars of a dismantled sequence switch while assembly changes are being made.

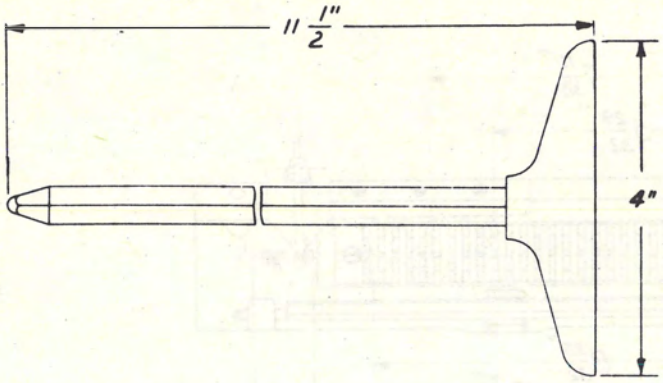

267B Tool

This is for insulating sequence switch springs from their respective cams without interfering with the rotation of the switch while it is operated for maintenance purposes.

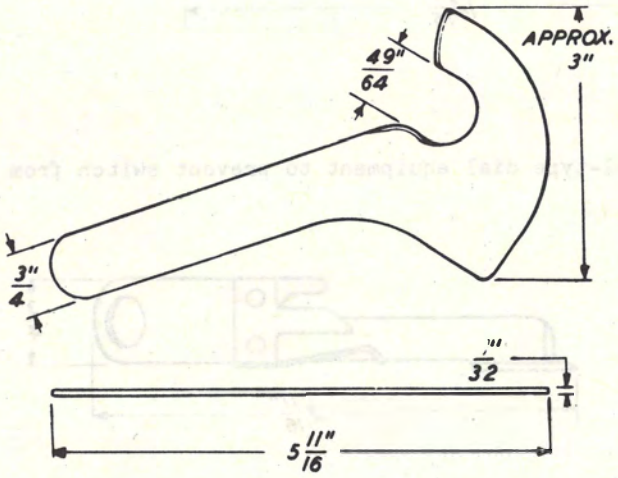

352 Tool

Used in separating contact springs after the cam shaft is removed.

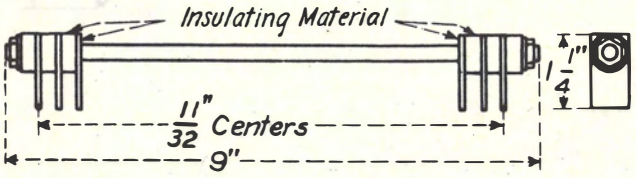

357 Tool

Used in making contact with sequence switch cams for testing purposes. Also for use on panel-type elevator apparatus.

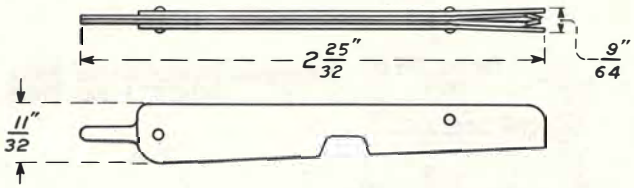

378A Tool

Used in roughening the frictional surface of the 5-type drives and of the driven disc of sequence switches in panel-type systems. Also for use on drives of power-driven rotary selectors.

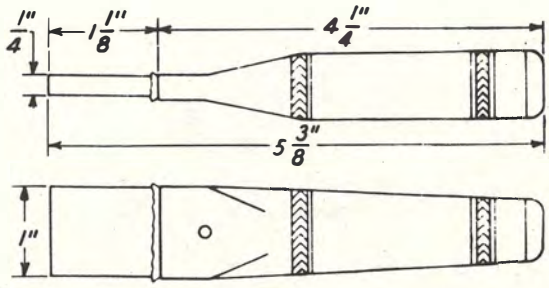

X-75515

397A Tool

Used as a guide and anvil to repair sequence switch cams having damaged insulators.

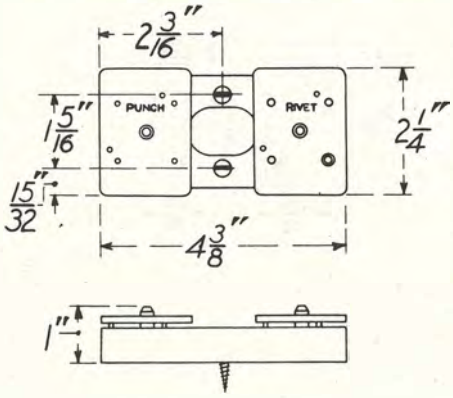

398A and 398B Tools

These tools are used in connection with 397A tool for punching out rivets and riveting contact plates and insulators, respectively, when repairing sequence switch cams having damaged insulators.

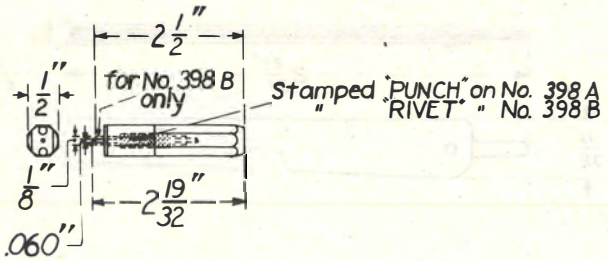

427A Tool

Used in supporting vertical drive shafts of sequence switches while making torque tests.

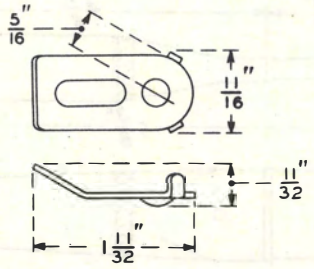

449A Tool

Used in conjunction with the 450A tool in mounting and aligning sequence switch drive shafts in panel-type dial systems.

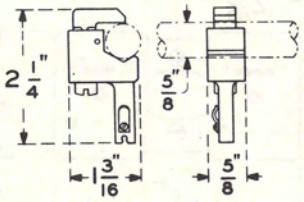

450A Tool

Used in conjunction with the 449A tool in mounting and aligning sequence switch drive shafts in panel-type dial systems.

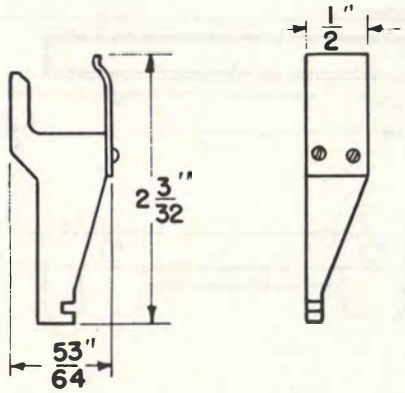

475A Tool

Used in short-circuiting jack springs of 197- and 198-type switches in order to operate the primary line switch bridge cutoff relay in dial systems. Nickel silver spring riveted to a handle of insulating material with an insulating sleeve over the spring end.

X-75515

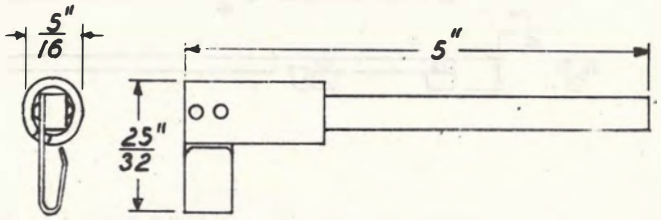

477A Tool

Nickel silver strip used in short circuiting jack springs of 197- and 198-type switches for make-busy purposes in dial systems.

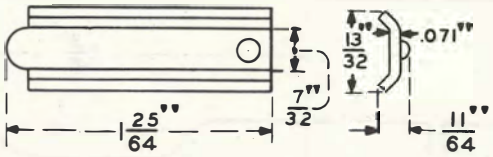

542A Tool

Used in blocking the armature unoperated on vertical units on switches in crossbar dial systems.

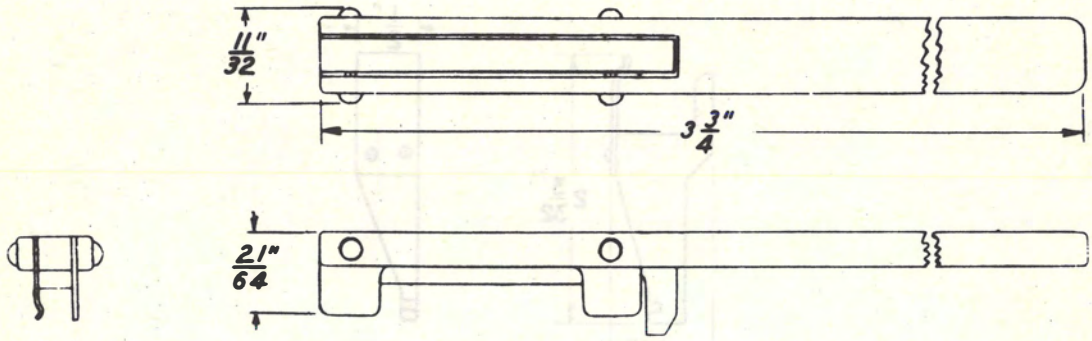

558A Tool

Used in blocking the armature unoperated on vertical units on all types of crossbar switches.

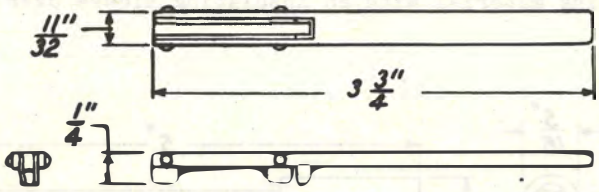

574A Tool

Used to depress the tab against which the operating cards rest to the right when checking the operating spring tension of card-operated crossbar switches.

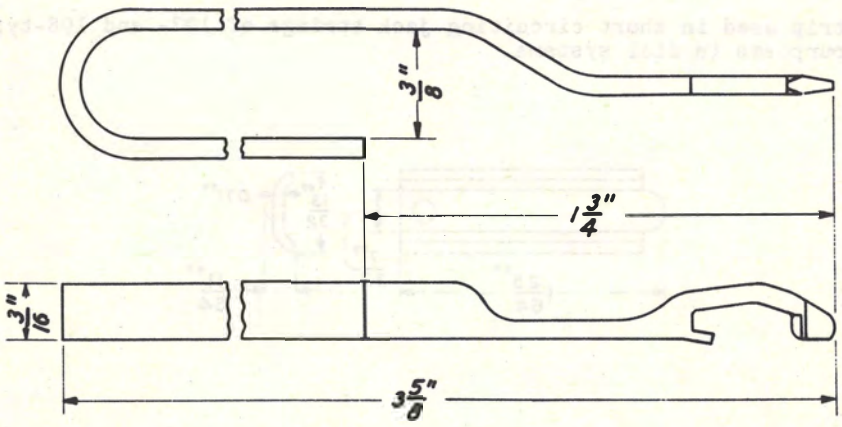

581A Tool

Used in magnet locking caps of 197- and 198-type switches.

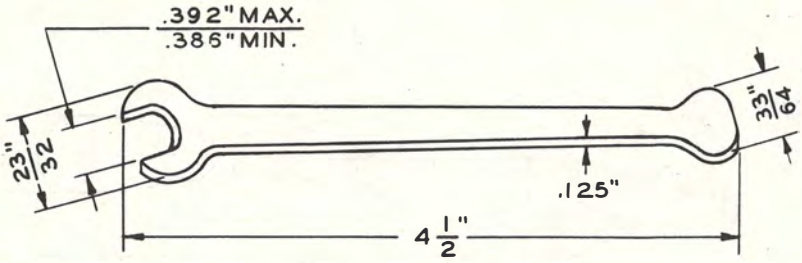

653A Tool

Used to hold the scouring pads and washing fluid and arranged to hook on to the sequence switch shaft during the scouring operation of panel-type sequence switch cams. Made of plastic. Used with KS-14694 abrasive pads and the KS-14654 cam scrubber.

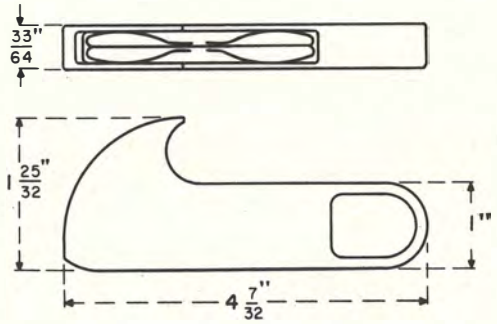

X-75515

KS-13859 Scraper

Used for scraping bank contacts of step-by-step switches so as to prepare them for cementing to replacement insulator. Forms part of the KS-13854 tool kit.

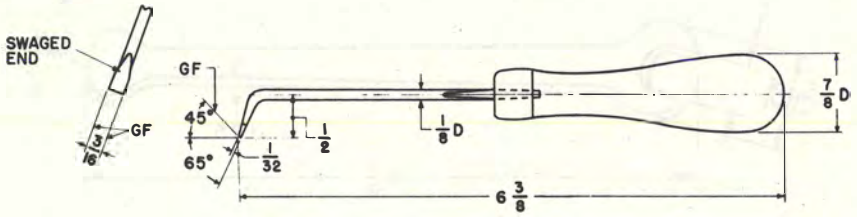

79 Tool

Used in turning back external braiding on switchboard cables.

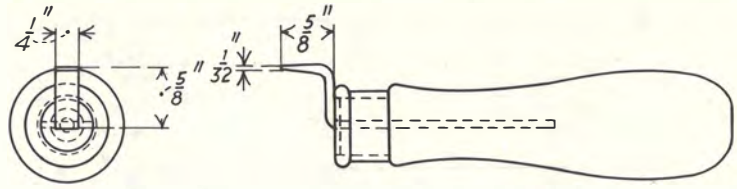

289 Tool

Used in dressing skinners to relays and resistances. Consists of a metal hook with a wooden handle.

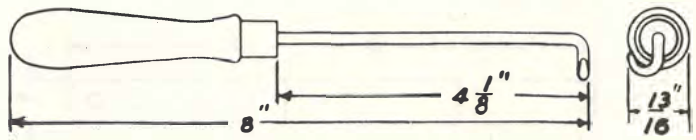

309 Tool

X-75515

Used in reassembling bearings of small motors and generators. Intended for use in pairs.

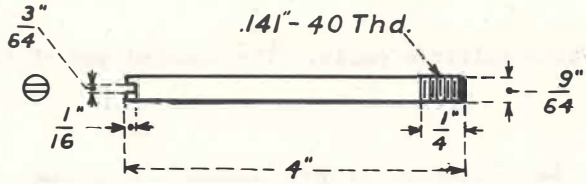

328 Tool

Used in adjusting the 1B guide. Also used on brush rods.

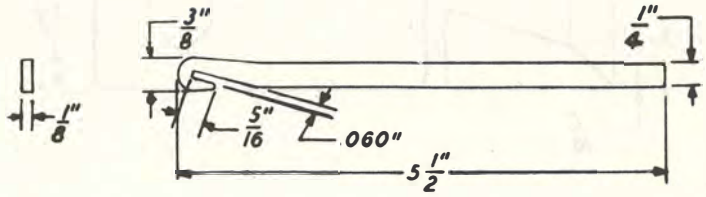

356 Tool

Used in the adjustment of the latch plate spring and the magnet lead guard of keys.

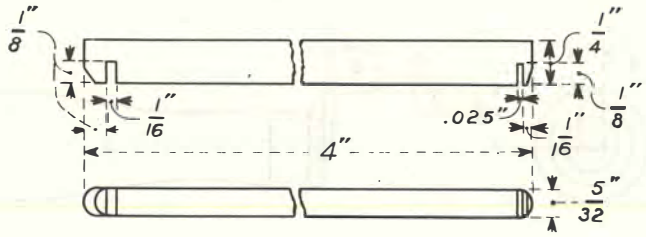

410A Tool

Hardwood wedge used as a multiple cable lifter.

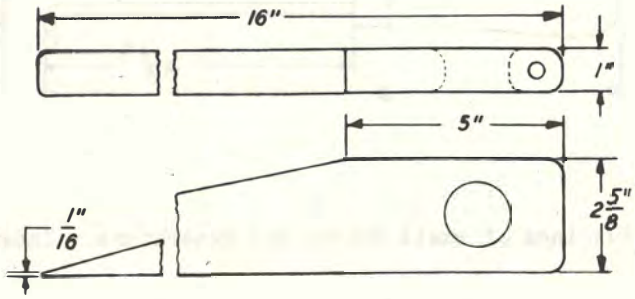

410B Tool

Wooden wedge used in lifting multiple cable. The slanted end of the tool may be cut to any required length.

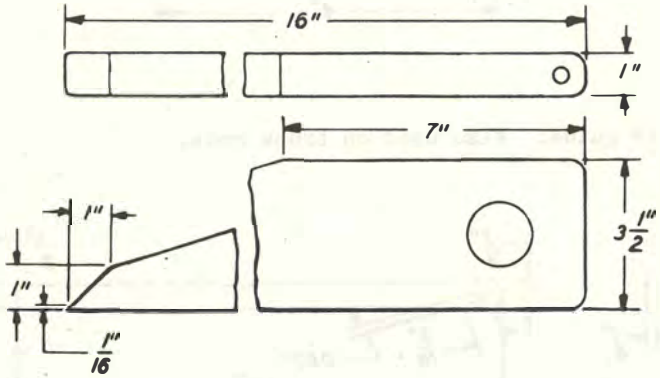

429A and 429B Tools

Wooden wedges used to support universal-type keys above the keyshelf when inspecting and adjusting keys. Dimension A equals 1-1/2 inches for 429A tool and 2-1/4 inches for 429B tool.

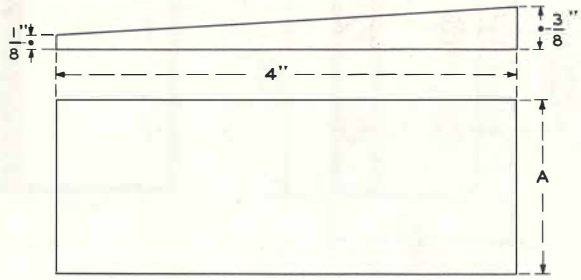

443A Tool

Used in making temporary connection to the tip, ring, and sleeve terminals of the cord shelves of the local and toll switchboards for the purpose of testing the relays in the cord circuits. Furnished with a 6-foot W3N cord and 310 plug.

X-75515

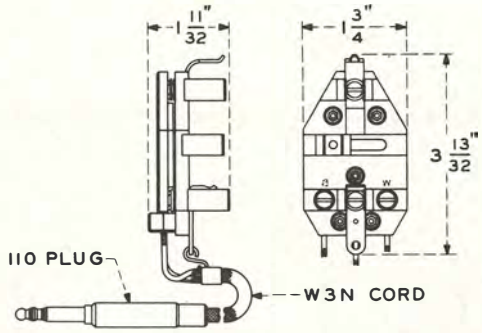

461A Tool

Used when it is desired to equip the receiver with a reinforcing cap and associated lock spring.

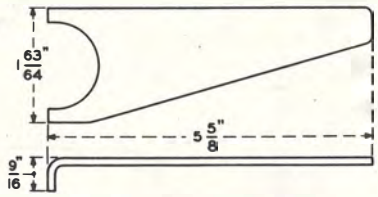

471A Tool

Used in teletypewriter equipment in connection with a KS-7468 volt-ohm-milliammeter when measuring the voltage delivered by a KS-5300 rectifier.

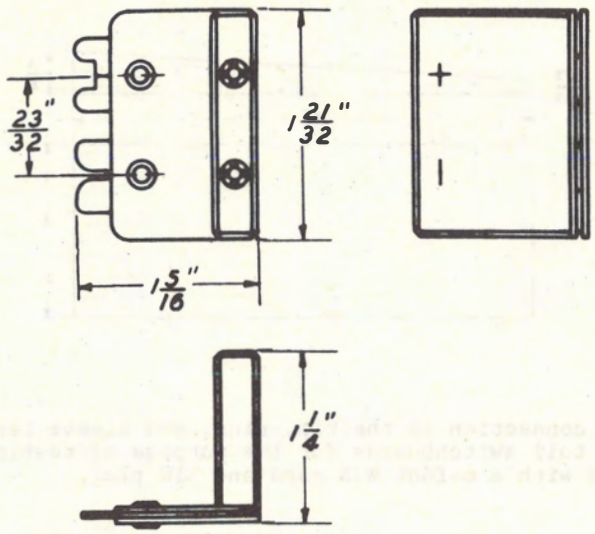

503A Tool

Used in making connections to cord circuits of No. 1 toll switchboards. Furnished with a W3N cord and a 310 plug.

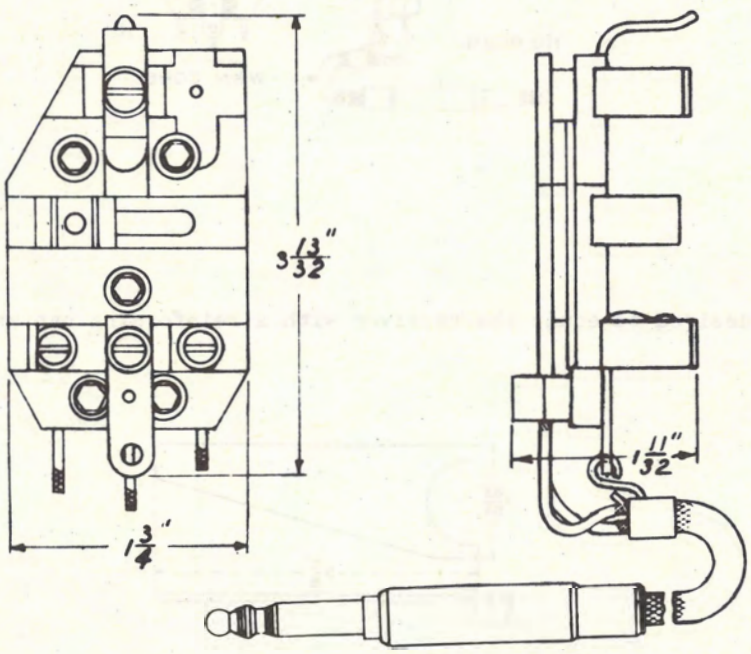

551A Tool

Used in adjusting timers.

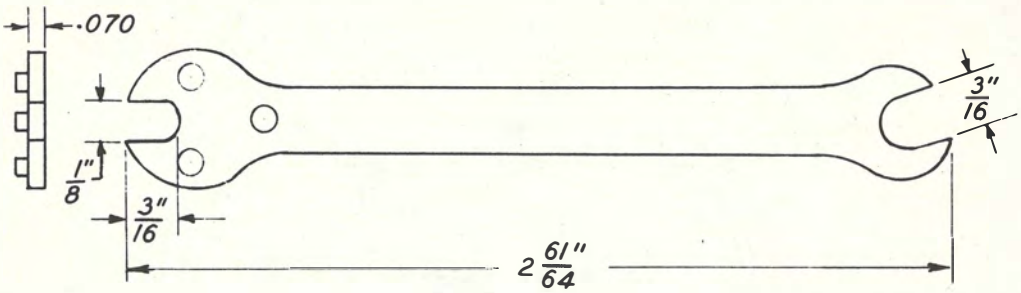

554A Tool

Used in adjusting gain of type "K" carrier line amplifier J68741A.

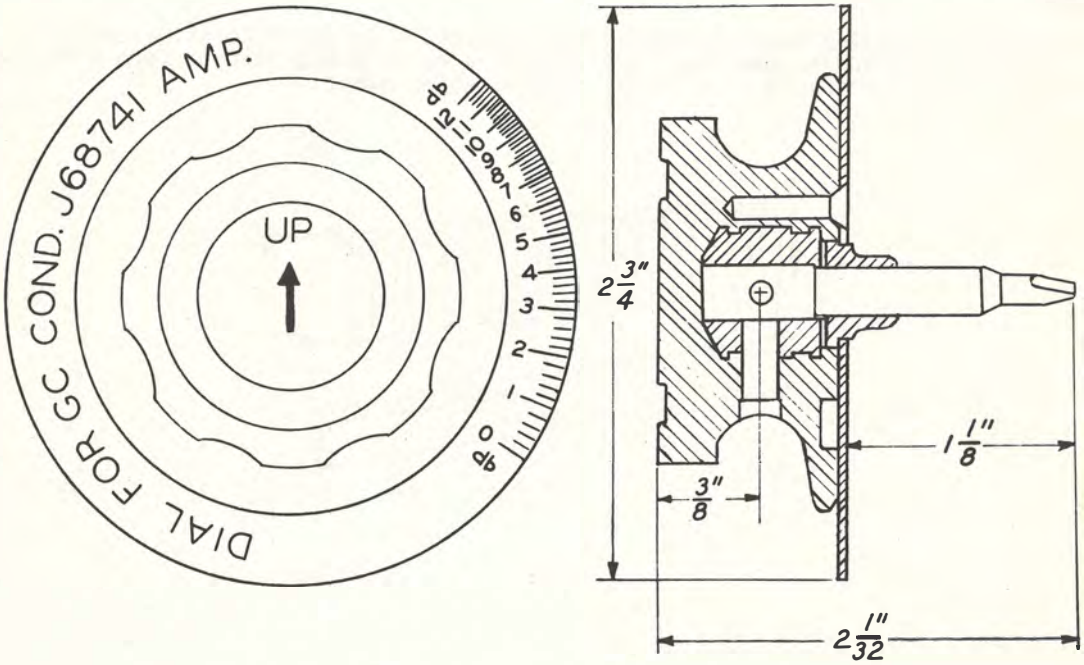

X-75515

598A Tool

A test probe used with the 31-type transmission measuring set. Consists of two condensers and a resistor mounted in a tabular metal case equipped on one end with a chuck and a metal prod and on the other end with a coaxial cable and a standard single-wire conductor. The conductor is equipped with a test clip. The coaxial cable is equipped with a modified 347B plug.

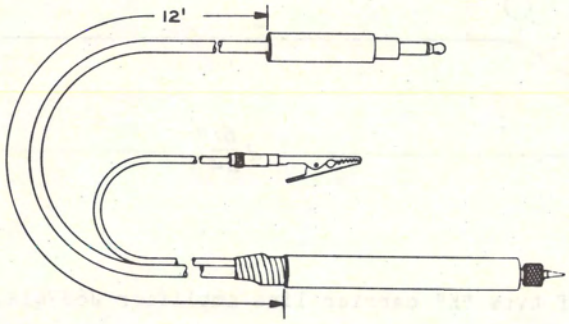

600A Tool

Used for short circuiting the thirteen 19-type resistors in the allotter circuit of step-by-step dial telephone systems. Consists of a metal strip bent to form a series of shorting springs and fastened to a handle of insulating material.

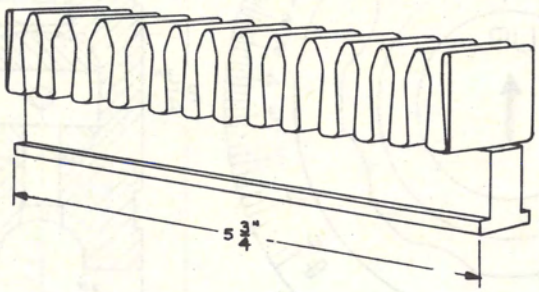

604B and 604C Tools

Used for splicing and cutting a 1-1/2-inch slot and 1-inch slot, respectively, in unperforated tape for use in the automatic message accounting system.

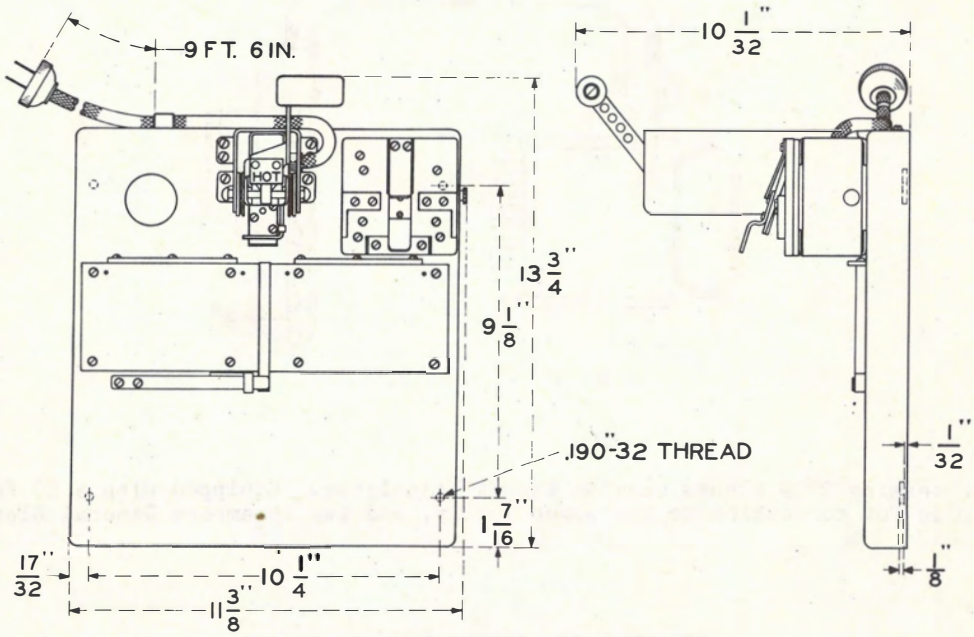

X-75515

604D Tool

Used for splicing perforated tape in the automatic message accounting system.

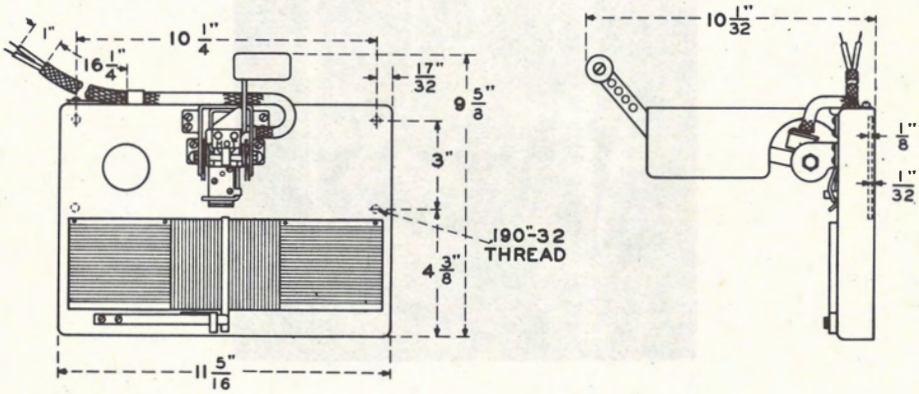

615A Tool

Used in connecting six leads of a No. 12 service observing circuit to the answer and calling cords of an operator's cord circuit. Consists of a plug and connector assembly connected together with a W6G cord.

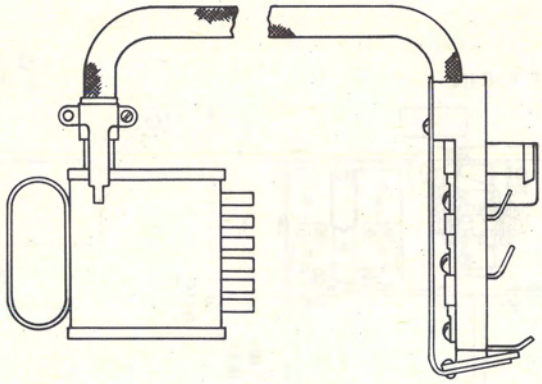

616A Tool

Used in processing 200A blanks used in the 1A translator. Equipped with a 20 foot long cord and plug for connection to the power supply, and two 15-ampere General Electric Co. fuses.

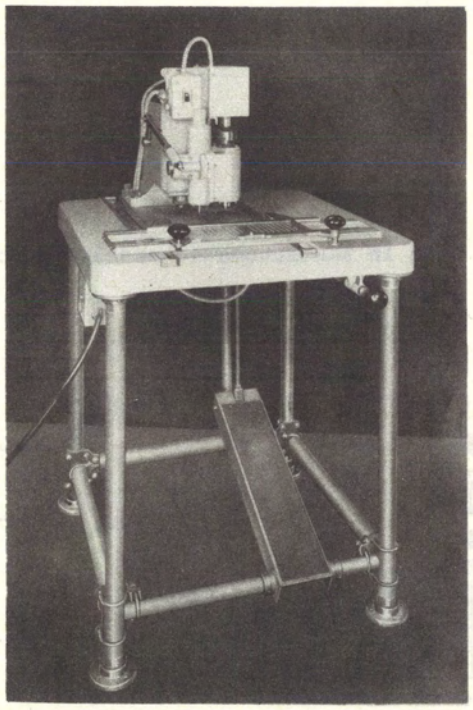

621A Tool

Used in spreading panel commutator wiper arms when checking and adjusting commutator springs.

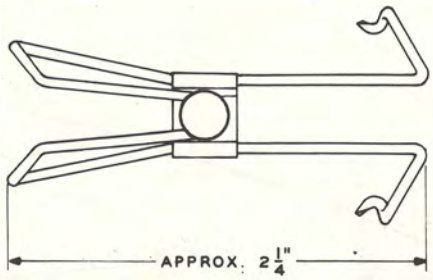

642A Tool

Used as a dial lock for KS-13835 readers in AMA systems while adjustments are being made.

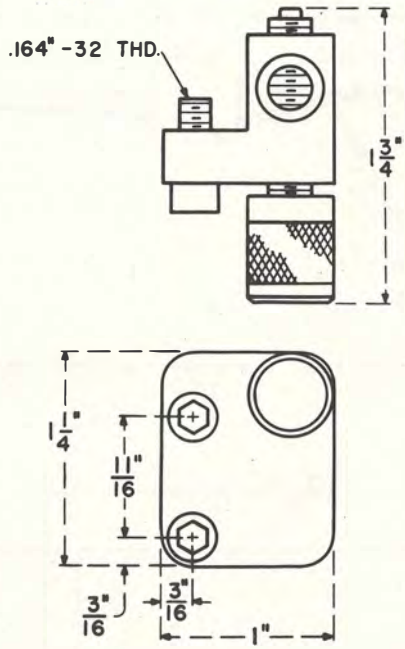

X-75515

644A Tool

Used on the magnet mounting screws of KS-13882 perforators in AMA Systems. Consists of an adapter and a clamp for holding the adapter in place with the screw and two ratchet handles; one stationary to hold screw and the other movable to act as a wrench in tightening the screw. By reversing the movable handle, the screw is loosened.

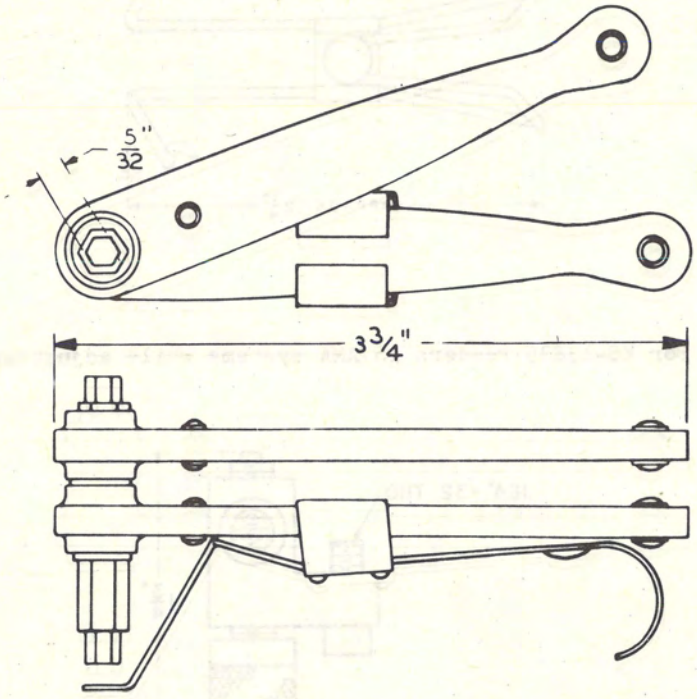

650A Tool

Used as a guard to protect the hands of the operator when making adjustments in KS-13882 perforators in AMA systems.

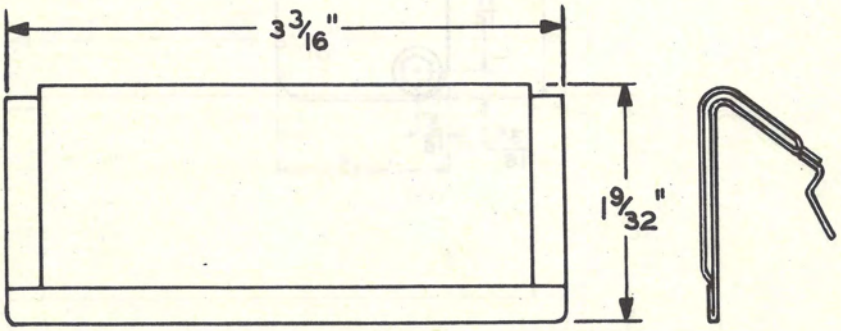

D-170030 Tool

Used in replacing operating cards in the vertical unit of the crossbar switch.

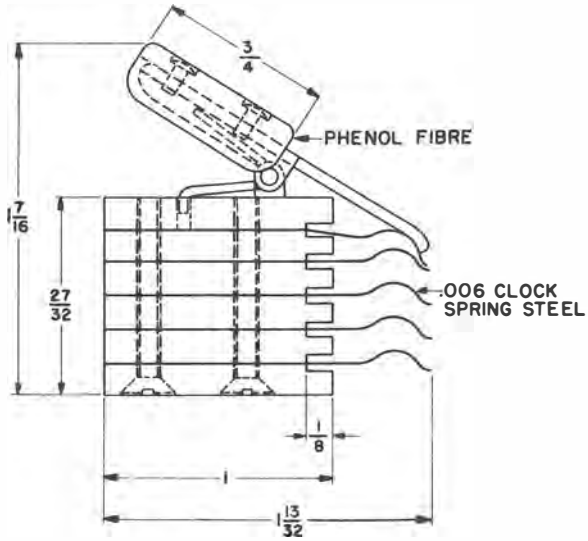

X-75515

GENERAL PURPOSE GAUGES
SECTIONS 26-28

GENERAL PURPOSE GAUGES
SECTIONS 26-28

27 Gauge

Used for determining when parts of the 309 plug have reached the limit of wear.

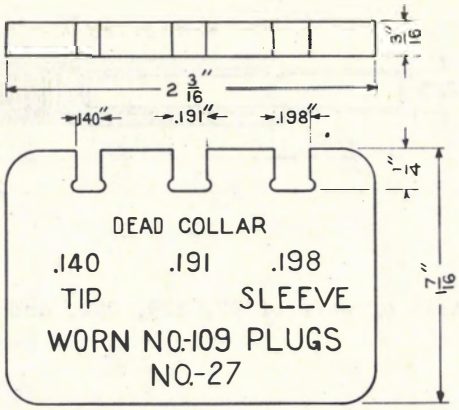

28 Gauge

Used for determining when parts of the 310 plug have reached the limit of wear.

X-75515

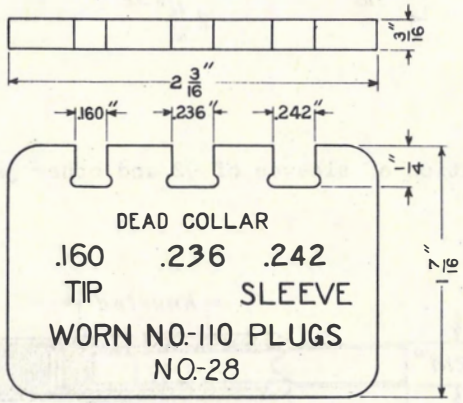

33 Gauge

Used in gauging the sleeve limit of wear of 49, 141, and other jacks functioning with the 310-type plugs.

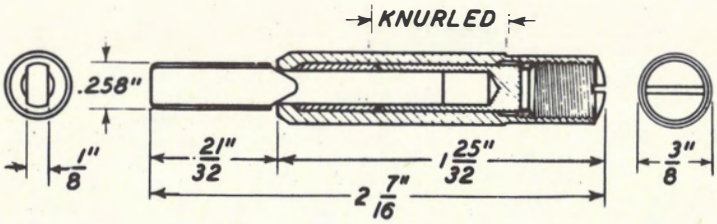

34 Gauge

Used in determining the condition of sleeves of 49, 141, and other jacks functioning with 310-type plugs.

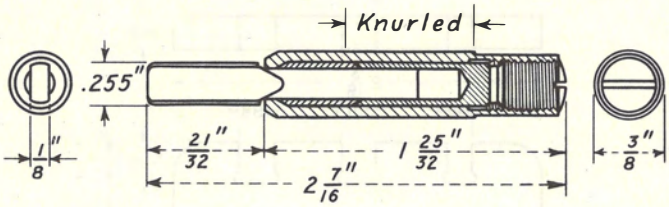

39 Gauge

Used in gauging the sleeve limit of wear of 92, 229, 292, and other jacks functioning with 309-type plugs.

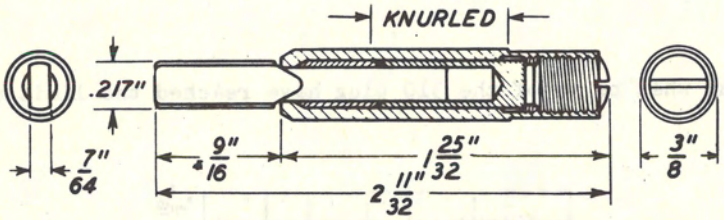

40 Gauge

Used in determining the condition of sleeves of 92 and other jacks functioning with 309-type plugs.

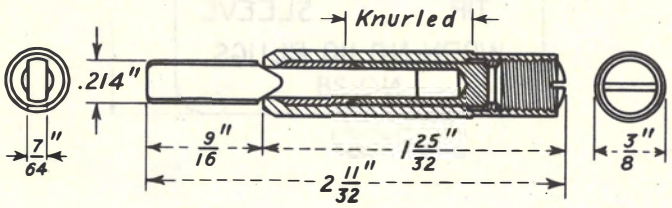

130A Gauge

Double-ended plug gauge used in replacing pawl pins on 197- and 198-type switches. Forms part of the 1001A tool kit. One end measures 0.093 inch. The other end measures 0.089 inch.

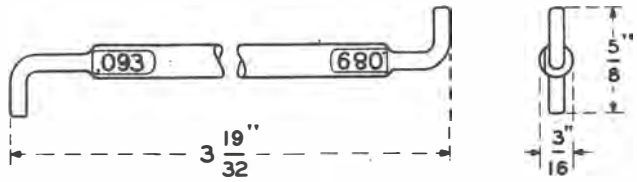

145A Gauge

Used for measuring stud gaps of selecting off-normal spring assemblies on switches. Handle is made of hard rubber.

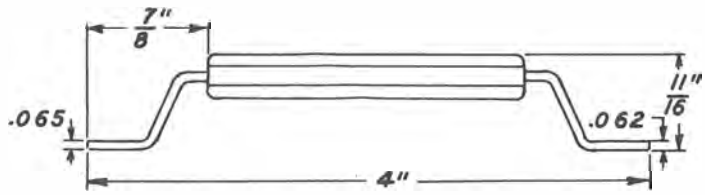

X-75515

170A Gauge

Used in the transistor connector of the 4A apparatus unit. The 0.043-inch end is used for adjusting the spring, and the 0.037-inch end is used for checking the spring tension.

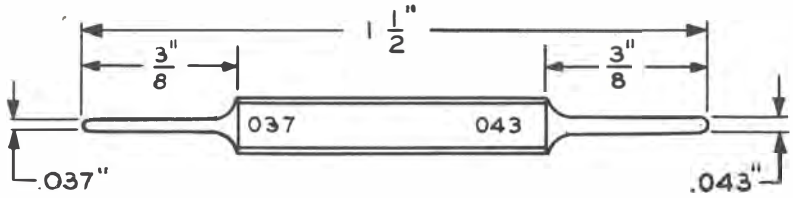

62B Gauge

Used for measuring in grams the tension of sequence switch A-cam roller springs.

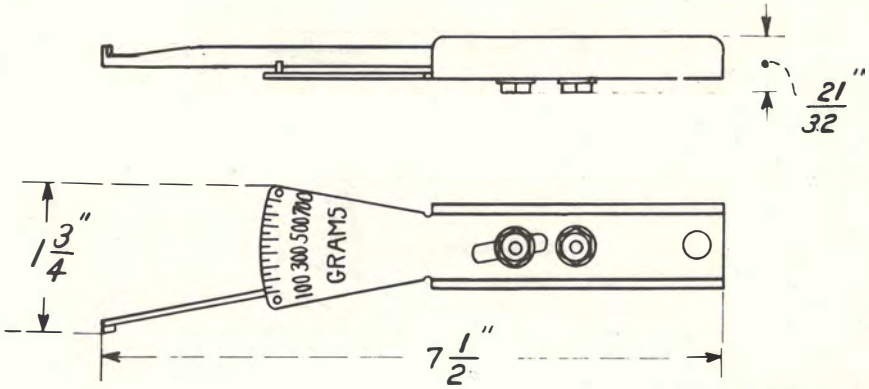

68B Gauge

Used in dial equipments for measuring the tension of multiple brush springs, sequence switch brush springs, and commutator brush springs.

X-75515

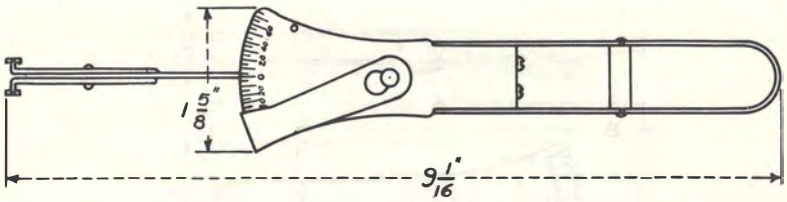

68C Gauge

Used in dial equipments for checking relay spring tensions.

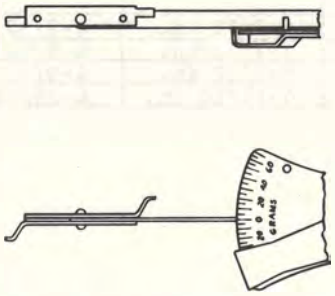

68D Gauge

Used in panel-type dial telephone equipments for measuring the tension of multiple brush springs.

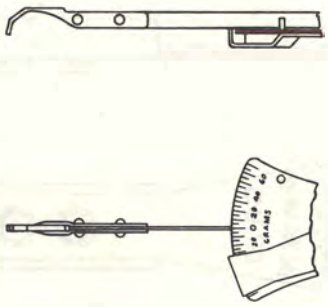

70D, 70F, 70H and 70J Gauges

Used for measuring the tension of relay springs. 70J gauge is also used for crossbar switch springs. Each consists of a frame on which are assembled an indicating spring, a folding handle, and an adjustable tension attachment. The folding handle, when closed, serves as a protector for the indicating spring and the adjustable tension attachment provides for setting the indicating spring at an initial tension. Scale is stamped on both sides.

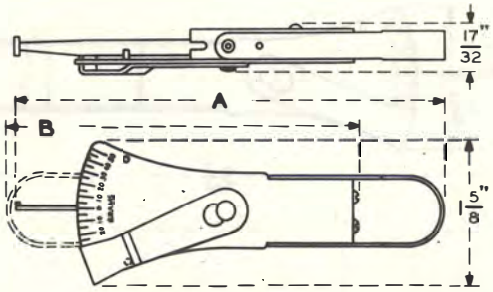

	DIM. A	DIM. B
70D	5-7/32 in.	4-9/32 in.
70F	5-7/32 in.	4-9/32 in.
70H	5-7/32 in.	4-9/32 in.
70J	5-15/16 in.	4-25/32 in.

70G Gauge

Used in connection with ringer biasing springs. The tension attachment is provided with a means for locking in place. Scale is stamped on both sides.

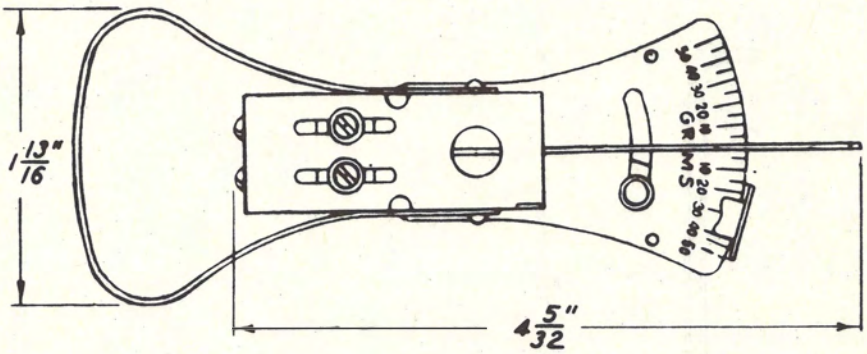

79B and 79C Gauges

Used in adjusting and testing on 206-type selectors. 79B is calibrated for 1000 grams in 25-gram steps. 79C is calibrated for 200-grams in 5-gram steps.

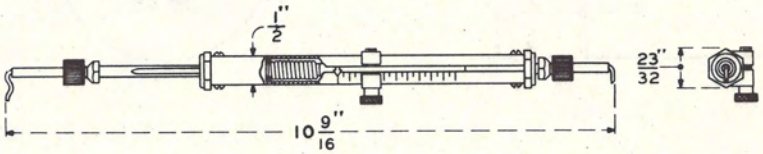

X-75515

79F Gauge

Used in checking key lever and plunger installation and maintenance. Calibrated for 6000 grams in 50-gram steps.

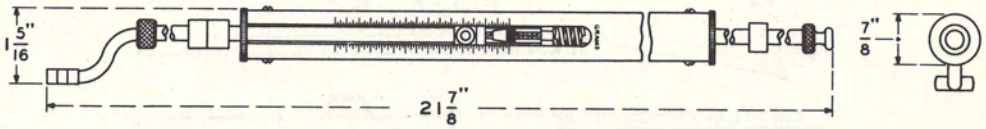

93B Gauge

Used as a variable weight in connection with tension adjustment of clutch armature springs of up-drive rollers in dial systems. Consists of a metal cylinder and hook weighing 1300 grams and five slotted metal discs weighing 50, 50, 50, 100, and 150 grams, respectively, which can be added to make a total weight of 1700 grams.

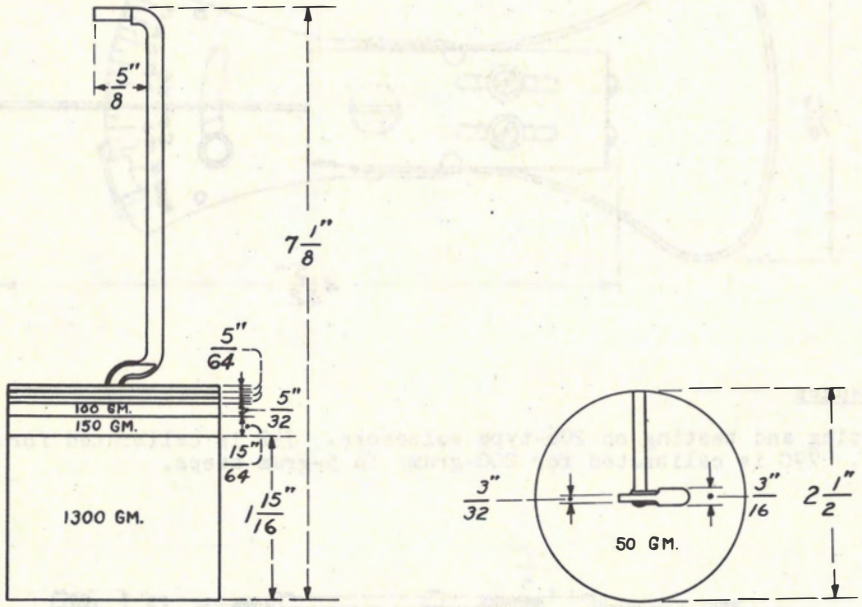

158A Gauge

Used for measuring the tension of tip and ring springs of single-mounted jacks. Scale is stamped on both sides.

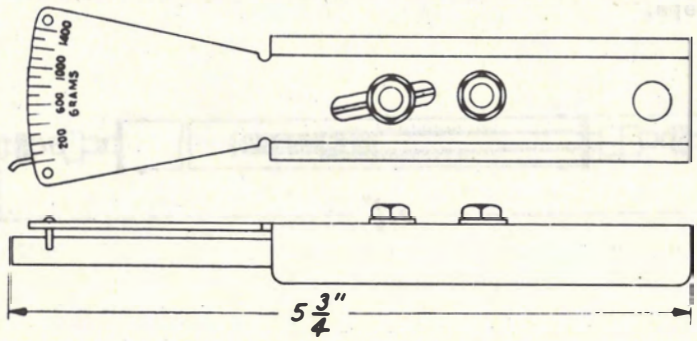

0.0015 INCH

92R Gauge

Nonmagnetic thickness gauge for general use.

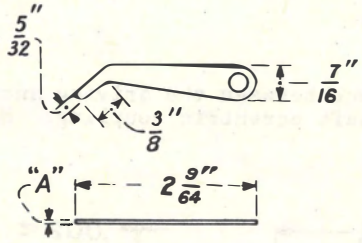

A = 0.0015 inch for 92R gauge

172A Gauge

Used as armature gap spacers in the adjustment of wire spring relays. A indicates thickness.

X-75515

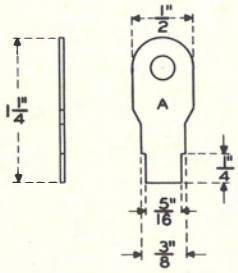

0.002 INCH

75F Gauge

For general use.

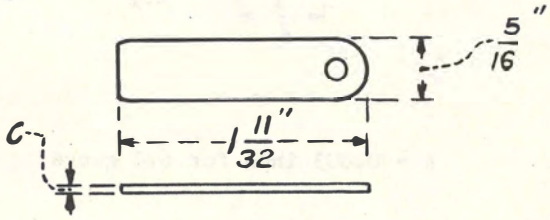

C = 0.002 inch for 75F gauge

0.002 INCH

92S Gauge

Nonmagnetic thickness gauge for general use. Same as 92R gauge (0.0015 inch) except for thickness.

R-5370 Gauge

Used to obtain the proper clearance between the driving and driven lugs and the bronze sliding plates of the vertical shaft eccentric coupling. Handle is made of fiber.

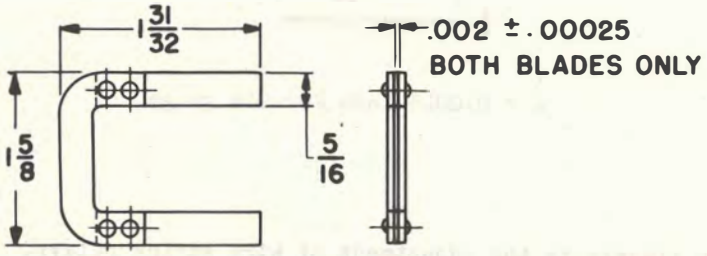

0.003 INCH

67G Gauge

For general use.

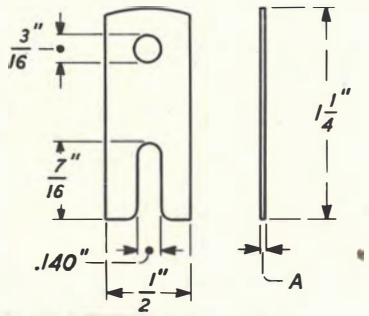

A = 0.003 inch for 67G gauge

0.003 INCH

75B Gauge

For general use. Same as 75F gauge (0.002 inch) except for thickness.

92P Gauge

Nonmagnetic thickness gauge for general use. Same as 92R gauge (0.0015 inch) except for thickness.

172B Gauge

Used as armature gap spacers in the adjustment of wire spring relays. Same as 172A gauge (0.0015 inch) except for thickness.

0.0035 INCH

172C Gauge

Used as armature gap spacers in the adjustment of wire spring relays. Same as 172A gauge (0.0015 inch) except for thickness.

X-75515

0.004 INCH

67H Gauge

For general use. Same as 67G gauge (0.003 inch) except for thickness.

75C Gauge

For general use. Same as 75F gauge (0.002 inch) except for thickness.

0.004 INCH

110A Gauge

Used in checking contact separation of stepping-type relays.

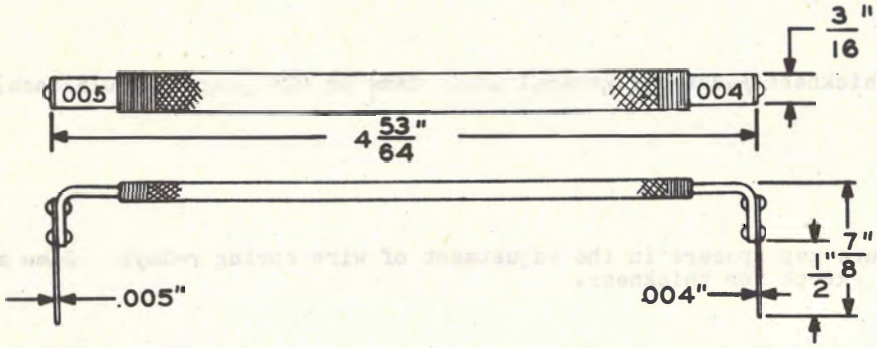

127A Gauge

Used in adjusting coin collector relays and airgaps on ringers.

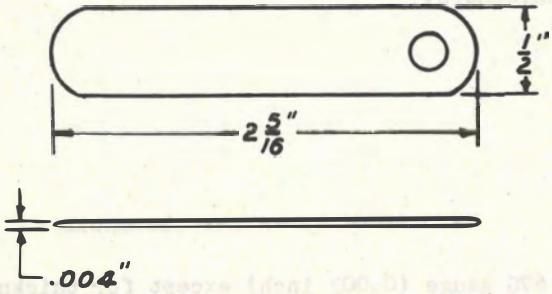

132AF Gauge

Used in adjusting the armature travel and for spring gauging of U-, Y-, and UA-type relays.

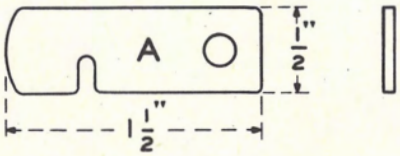

A = 0.004 inch for 132AF gauge

0.004 INCH

133A Gauge

Used in gauging stud gaps of U- and Y-type relays. The thickness applies for a distance of minimum 3/16 inch from each tip.

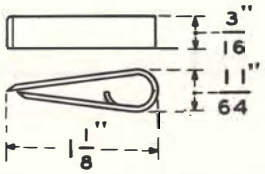

0.0045 INCH

172D Gauge

Used as armature gap spacers in the adjustment of wire spring relays. Same as 172A gauge (0.0015 inch) except for thickness.

X-75515

0.005 INCH

67K Gauge

For general use. Same as 67G gauge (0.003 inch) except for thickness.

75D Gauge

For general use. Same as the 75F gauge (0.002 inch) except for thickness.

0.005 INCH

85A Gauge

For general use.

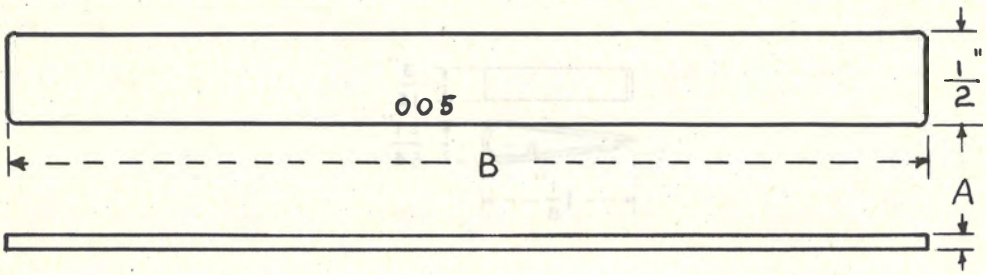

A = 0.005 inch for 85A gauge
B = 5 inches for 85A gauge

86 Gauge

Used on panel type elevator apparatus. Also used in measuring the clearance between the insulating separator on the tip and ring springs and the sleeve springs of multiple brushes when in tripped position.

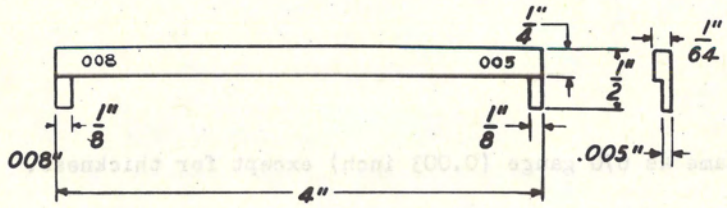

92T Gauge

Nonmagnetic thickness gauge for general use. Same as 92R gauge (0.0015 inch) except for thickness.

0.005 INCH

100A Gauge

For general use

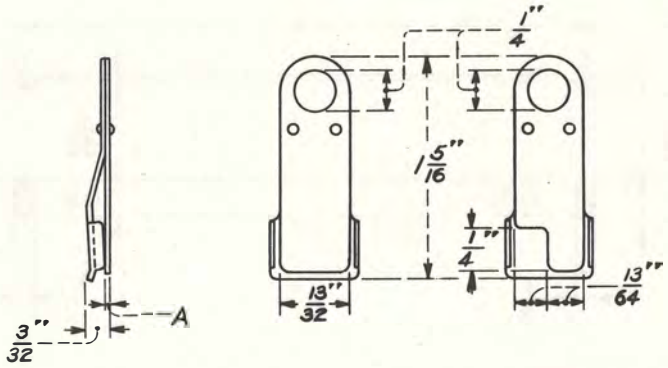

A = 0.005 inch for 100A gauge

110A Gauge

See 110A gauge listed under 0.004 inch.

X-75515

140A Gauge

Used on crossbar switches and panel type line finders and ringers.

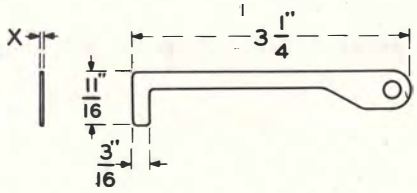

X = 0.005 inch for 140A gauge

172E Gauge

Used as armature gap spacers in the adjustment of wire spring relays. Same as 172A gauge (0.0015 inch) except for thickness.

0.005 INCH

R-1570 Gauge

Used to check multiple brush stud gap requirement.

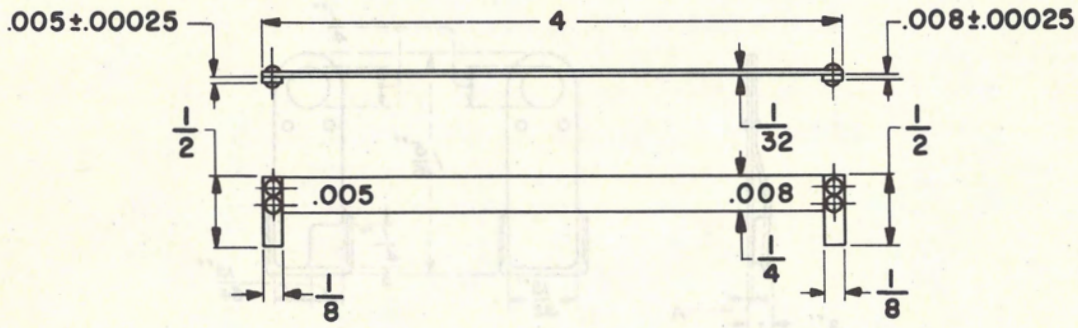

0.006 INCH

67L Gauge

For general use. Same as 67G gauge (0.003 inch) except for thickness.

75E Gauge

For general use. Same as 75F gauge (0.002 inch) except for thickness.

92U Gauge

Nonmagnetic thickness gauge for general use. Same as 92R gauge (0.0015 inch) except for thickness.

0.006 INCH

117A Tool

Used in measuring the clearance between the rotary pawl and the rotary pawl frontstop of the 197- and 198-type switches.

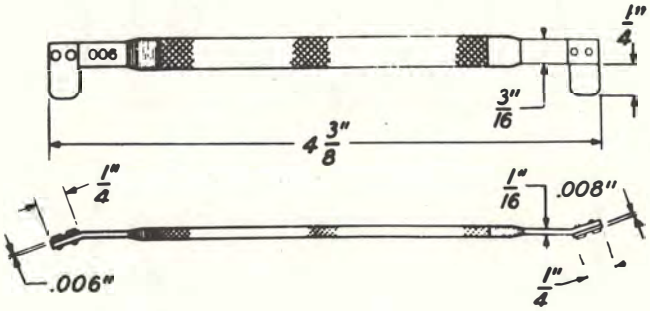

132AG Gauge

Used in adjusting the armature travel and for spring gauging of U-, Y-, and UA-type relays. Same as 132AF gauge (0.004 inch) except for thickness.

X-75515

0.007 INCH

73B Gauge

Used in gauging armature airgaps of the 208-type relays.

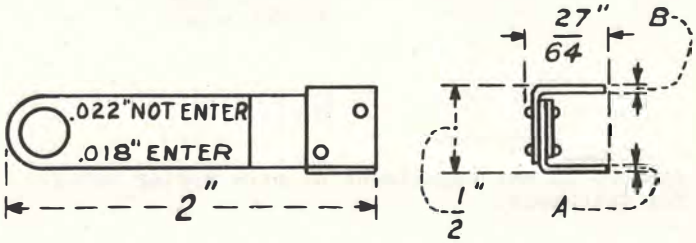

A = 0.007 inch for 73B gauge
B = 0.008 inch for 73B gauge

75J Gauge

For general use. Same as 75F gauge (0.002 inch) except for thickness.

0.007 INCH

126AC Gauge

Used in adjusting coin collector relays and airgaps on ringers.

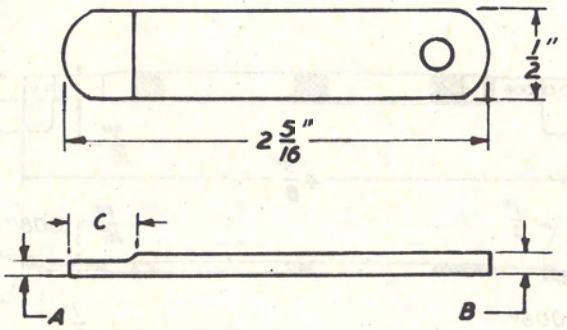

A = 0.007 inch for 126AC gauge
B = 0.011 inch for 126AC gauge
C = 3/8 inch for 126AC gauge

129A Gauge

Used in checking the gap between the heel piece and armature of 247- and 248-type relays in dial systems.

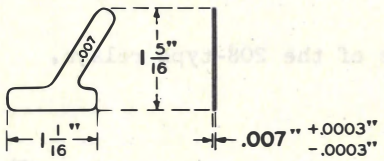

172F Gauge

Used as armature gap spacers in the adjustment of wire spring relays. Same as 172A gauge (0.0015 inch) except for thickness.

0.007 INCH

174A Gauge

Nonmagnetic thickness gauge used for adjusting armature gaps of operating magnets of KS-13882 perforators in AMA systems.

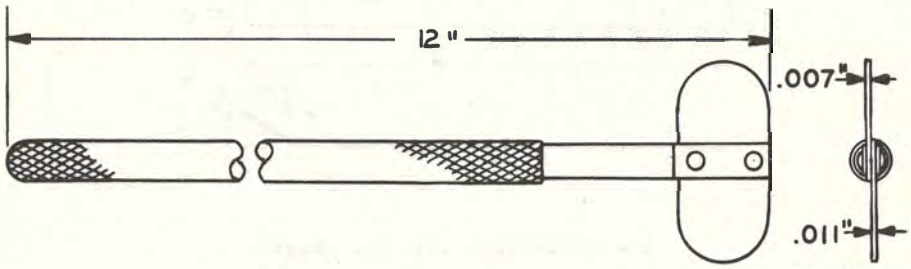

0.008 INCH

67J Gauge

For general use. Same as 67G gauge (0.003 inch) except for thickness.

X-75515

73B Gauge

Used in gauging armature airgaps of the 208-type relays. See 73B gauge listed under 0.007 inch.

75N Gauge

For general use. Same as 75F gauge (0.002 inch) except for thickness.

86 Gauge

See 86 gauge under 0.005 inch.

0.008 INCH

88A Gauge

Used on power-driven rotary selectors. It is used for gauging the minimum test gap between contacts.

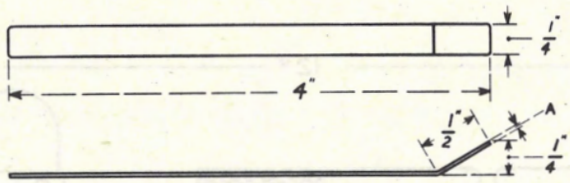

A = 0.008 inch for 88A gauge

92W Gauge

Nonmagnetic thickness gauge for general use. Same as 92R gauge (0.0015 inch) except for thickness.

117A Gauge

See 117A gauge under 0.006 inch.

132A Gauge

Used in adjusting the armature travel and for spring gauging of U-, Y-, and UA-type relays. Same as 132AF gauge (0.004 inch) except for thickness.

0.008 INCH

168A Gauge

Nonmagnetic-type gauge used in adjusting the 324-, 325-, and 328-type switches.

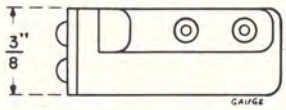

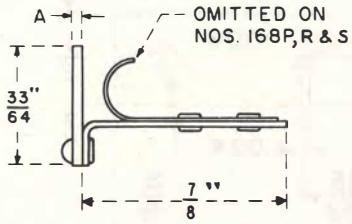

A = 0.008 inch for 168A gauge

R-1570 Gauge

X-75515

See R-1570 gauge under 0.005 inch.

0.0085 INCH

172G Gauge

Used as armature gap spacers in the adjustment of wire spring relays. Same as 172A gauge (0.0015 inch) except for thickness.

0.009 INCH

75K Gauge

For general use. Same as 75F gauge (0.002 inch) except for thickness.

0.009 INCH

126A Gauge

Used in adjusting coin collector relays and airgaps on ringers. Same as 126AC gauge (0.007 inch) except for thickness.

A = 0.009 inch, C = 3/8 inch

R-2703 Gauge

Used in checking U- and Y-type relays.

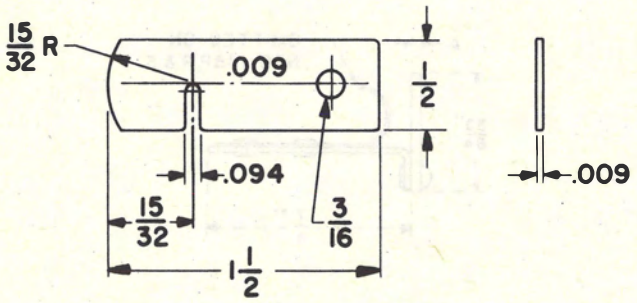

0.010 INCH

67M Gauge

For general use. Same as 67B gauge (0.003 inch) except for thickness.

75M Gauge

For general use. Same as 75F gauge (0.002 inch) except for thickness.

0.010 INCH

80B Gauge

Used for measuring the airgap between the adjusting screw and the roller lever of drive magnets on clutches.

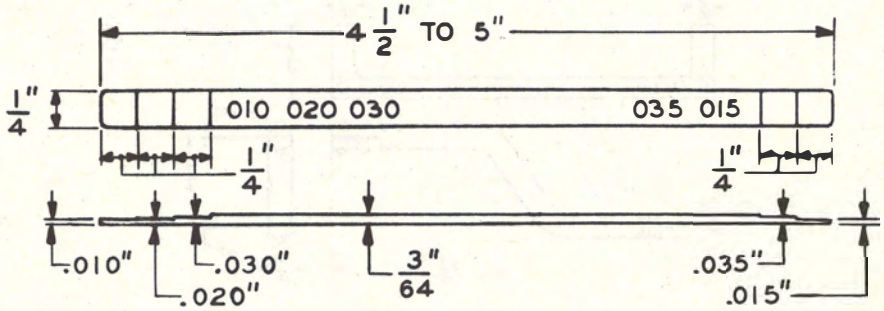

85B Gauge

For general use. Same as 85A gauge (0.005 inch) except for thickness.
A = 0.010 inch, B = 5 inches

88B Gauge

Used on power-driven rotary selectors. It is used for gauging the minimum test gap between contacts. Same as 88A gauge (0.008 inch) except for thickness.

X-75515

92A Gauge

Nonmagnetic thickness gauge for general use. Same as 92R gauge (0.0015 inch) except for thickness.

100B Gauge

For general use. Same as 100A (0.005 inch) except for thickness.

0.010 INCH

102A Gauge

Used in checking the operate requirements on line finder trip rods and the associated trip magnets.

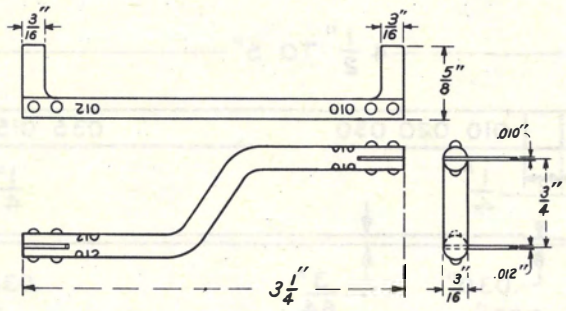

132B Gauge

Used in adjusting the armature travel and for spring gauging of U-, Y-, and UA-type relays. Same as 132AF gauge (0.004 inch) except for thickness.

134A Gauge

Flat blade in an insulated handle. Used for adjusting separation of the normally open contacts of the make-before-break units on U- and Y-type relays.

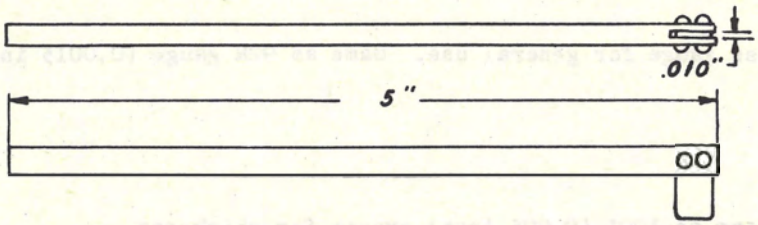

140B Gauge

Used on crossbar switches and panel line finders and ringers. Same as 140A gauge (0.005 inch) except for thickness.

168B Gauge

Nonmagnetic-type gauge used in adjusting the 324-, 325-, and 328-type switches. Same as 168A gauge (0.008 inch) except for thickness.

172H Gauge

Used as armature gap spacers in the adjustment of wire spring relays. Same as 172A gauge (0.0015 inch) except for thickness.

0.011 INCH

75L Gauge

For general use. Same as 75F gauge (0.002 inch) except for thickness.

126AC Gauge

See 126AC gauge under 0.007 inch.

174A Gauge

See 174A gauge under 0.007 inch.

0.012 INCH

75G Gauge

For general use. Same as 75F gauge (0.002 inch) except for thickness.

77B Gauge

Used in checking the airgaps of relays.

X-75515

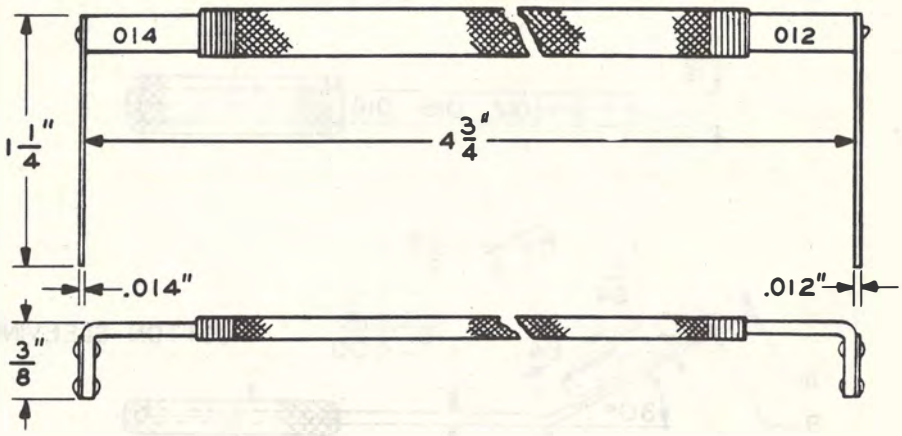

102A Gauge

See 102A gauge under 0.010 inch.

0.012 INCH

103A Gauge

Used in checking the contact separation of the bridging cutoff relay springs in dial systems.

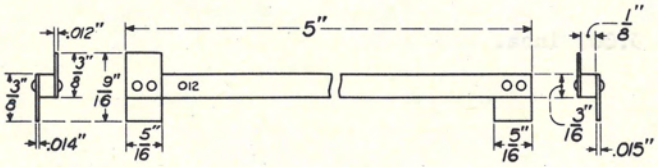

138A Gauge

Used in holding armatures partially open while checking for adjustments of contact springs on multicontact relays. Same as R-2441 gauge (0.015 inch) except for thickness.

172J Gauge

Used as armature gap spacers in the adjustment of wire spring relays. Same as 172A gauge (0.0015 inch) except for thickness.

R-2143 Gauge

Used in checking 114- and 198-type relays.

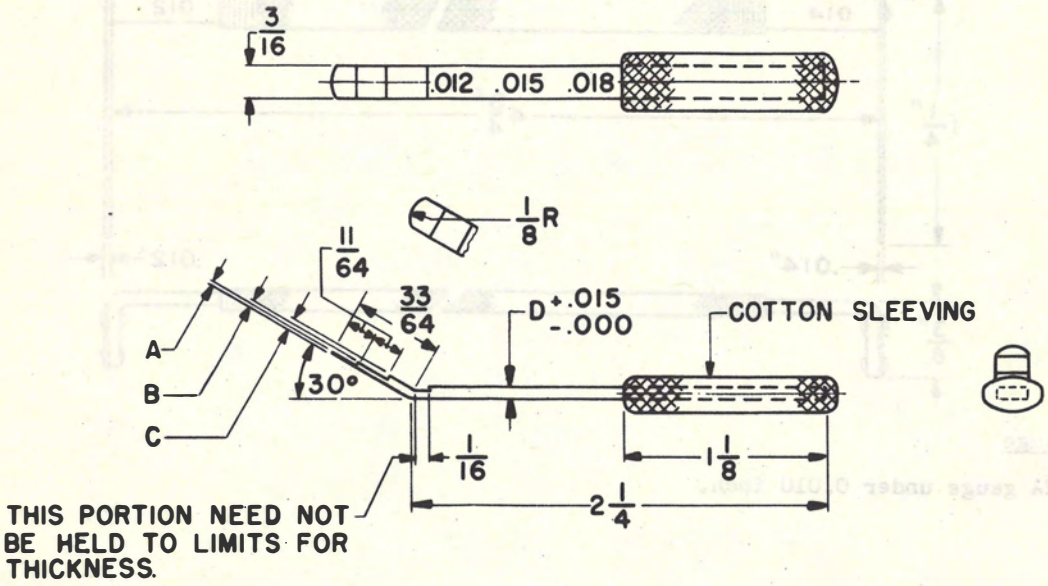

A = 0.012 inch for R-2143 gauge
B = 0.015 inch for R-2143 gauge
C = 0.018 inch for R-2143 gauge
D = 0.018 inch for R-2143 gauge

0.012 INCH

R-7150 Gauge

Used in checking adjustment of line finder trip magnets. 0.012 inch thick gauge end is nonmagnetic.

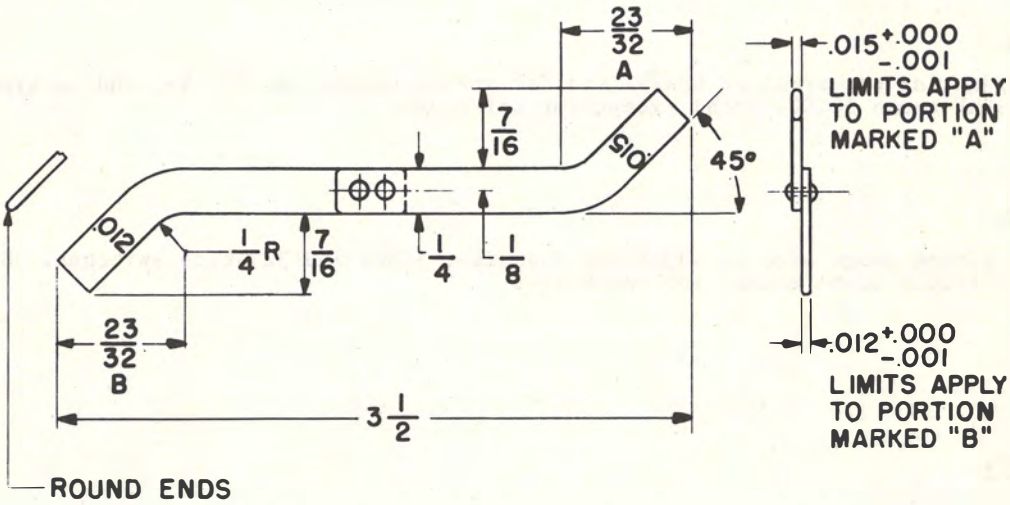

X-75515

0.013 INCH

73D Gauge

Used in gauging armature airgaps of the 208-type relays.

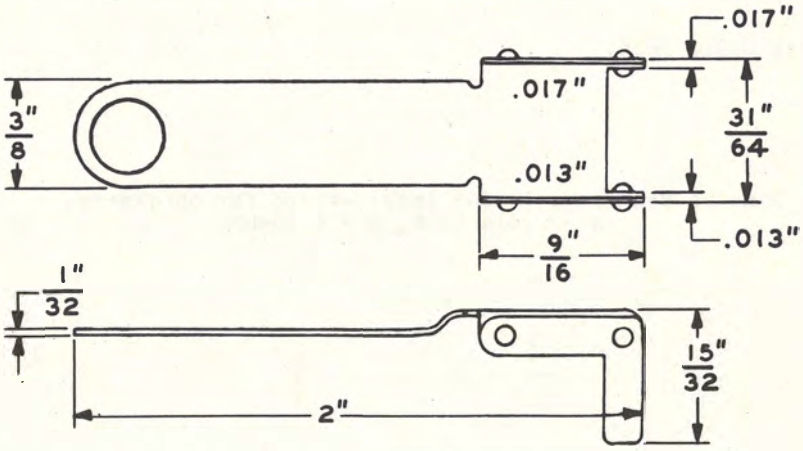

A = 0.013 inch for 73D gauge
B = 0.017 inch for 73D gauge

0.013 INCH

92B Gauge

Nonmagnetic thickness gauge for general use. Same as 92R gauge (0.0015 inch) except for thickness.

132C Gauge

Used in adjusting the armature travel and for spring gauging of U-, Y-, and UA-type relays. Same as 132AF gauge (0.004 inch) except for thickness.

168C Gauge

Nonmagnetic-type gauge used in adjusting the 324-, 325-, and 328-type switches. Same as 168A gauge (0.008 inch) except for thickness.

0.0135 INCH

172K Gauge

Used as armature gap spacers in the adjustment of wire spring relays. Same as 172A gauge (0.0015 inch) except for thickness.

0.014 INCH

77B Gauge

See 77B gauge under 0.012 inch.

85H Gauge

For general use. Same as 85A gauge (0.005 inch) except for thickness.
A = 0.014 inch, B = 6 inches

0.014 INCH

91A Gauge

Nonmagnetic thickness gauge used on 218B relays.

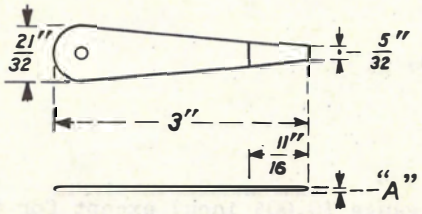

Dim A = 014 inch for 91A Gauge

103A Gauge

See 103A gauge under 0.012 inch.

0.0145 INCH

X-75515

172L Gauge

Used as armature gap spacers in the adjustment of wire spring relays. Same 172A gauge (0.0015 inch) except for thickness.

0.015 INCH

42 Gauge

Used for gauging the airgap between the back contact and the armature feather spring of 114- and 198-type relay. Mounted in a wooden handle.

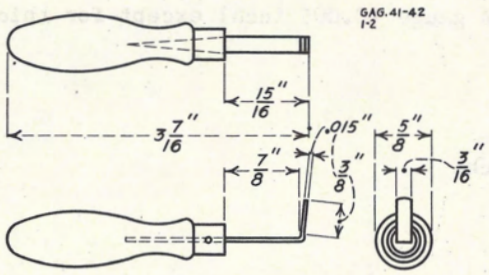

0.015 INCH

67A Gauge

For general use. Same as 67G gauge (0.003 inch) except for thickness.

80B Gauge

See 80B gauge under 0.010 inch.

85F Gauge

For general use. Same as 85A gauge (0.005 inch) except for thickness.
A = 0.015 inch, B = 5 inches

92E Gauge

Nonmagnetic thickness gauge for general use. Same as 92R gauge (0.0015 inch) except for thickness.

97A Gauge

Nonmagnetic thickness gauge used in checking the gap between the stops on the frame and the stop on the contact arm of the 51-type dial testers.

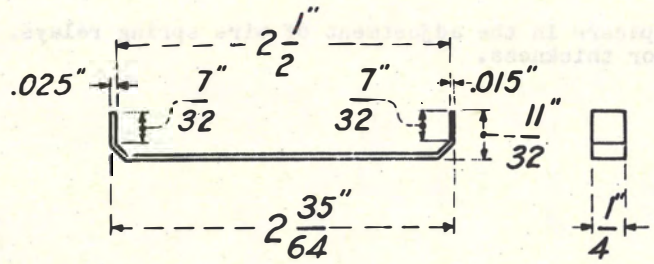

100C Gauge

For general use. Same as 100A gauge (0.005 inch) except for thickness.

103A Gauge

See 103A gauge under 0.012 inch.

0.015 INCH

126A Gauge

Used in adjusting coin collector relays and airgaps on ringers. Same as 126AC gauge (0.007 inch) except for thickness.

A = 0.009 inch, B = 0.015 inch, C = 3/8 inch

127B Gauge

Used in adjusting coin collector relays and airgaps on ringers. Same as 127A gauge (0.004 inch) except for thickness.

132D Gauge

Used in adjusting the armature travel and for spring gauging of U-, Y-, and UA-type relays. Same as 132AF gauge (0.004 inch) except for thickness.

140D Gauge

Used on crossbar switches and panel line finders and ringers. Same as 140A gauge (0.005 inch) except for thickness.

R-2143 Gauge

See R-2143 gauge under 0.012 inch.

X-75515

R-2441 Gauge

Used in checking multicontact relays.

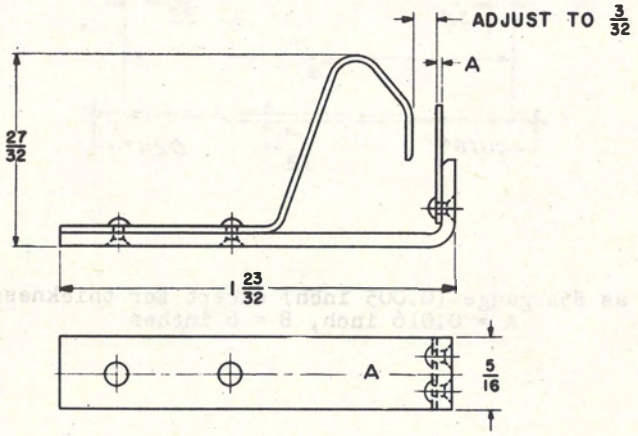

A = 0.0015 inch for R-2441

0.015 INCH

R-7150 Gauge

See R-7150 gauge under 0.012 inch.

D-158526 Gauge

Used in measuring the thickness of individual insulators of step-by-step banks.

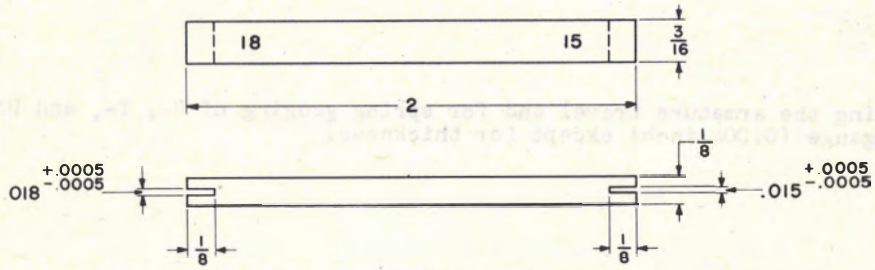

0.016 INCH

82B Gauge

Used in measuring airgaps of clutches in panel systems. For use with the up-drive magnets.

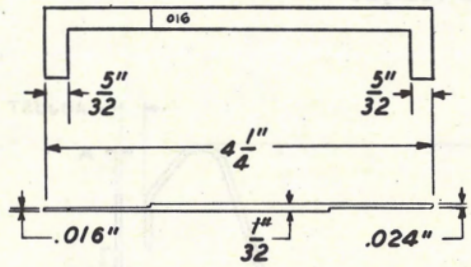

85J Gauge

For general use. Same as 85A gauge (0.005 inch) except for thickness.
A = 0.016 inch, B = 6 inches

0.016 INCH

110B Gauge

Used in checking the clearance between the lift surface and card notch of the 4A apparatus unit.

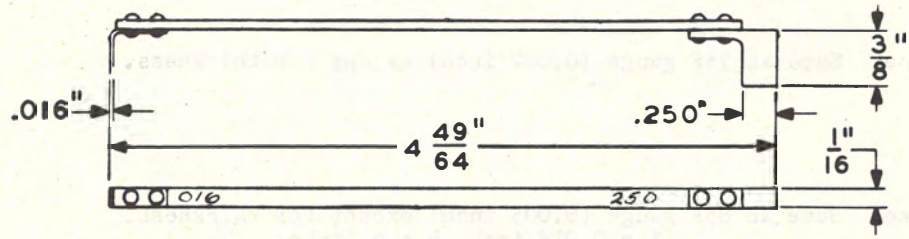

168D Gauge

Nonmagnetic thickness gauge used in adjusting the 324-, 325-, and 328-type switches. Same as 168A gauge (0.008 inch) except for thickness.

172M Gauge

Used as armature gap spacers in the adjustment of wire spring relays. Same as 172A gauge (0.0015 inch) except for thickness.

X-75515

0.017 INCH

73D Gauge

See 73D gauge under 0.013 inch.

132E Gauge

Used in adjusting the armature travel and for spring gauging of U-, Y-, and UA-type relays. Same as 132AF gauge except for thickness.

R-2144 Gauge

Used in checking 114- and 198-type relays. Same as R-2143 (0.012 inch) except for thickness.

A = 0.017 inch, B = 0.020 inch, C = 0.023 inch, D = 0.023 inch

0.018 INCH

73A Gauge

Used in gauging armature airgaps of the 208-type relays. Same as the 73D gauge (0.013 inch) except for thickness. A = 0.018" B = 0.022"

75H Gauge

For general use. Same as 75F gauge (0.002 inch) except for thickness.

85K Gauge

For general use. Same as 85A gauge (0.005 inch) except for thickness.
A = 0.018 inch, B = 6 inches

92D Gauge

Nonmagnetic thickness gauge for general use. Same as 92R gauge (0.0015 inch) except for thickness.

132AE Gauge

Used in adjusting the armature travel and for spring gauging of U-, Y-, and UA-type relays. Same as 132AF (0.004 inch) gauge except for thickness.

138B Gauge

Used in holding armatures partially open while checking for adjustments of contact springs on multicontact relays. Same as R-2441 gauge (0.015 inch) except for thickness.

R-2143 Gauge

See R-2143 gauge under 0.012 inch.

D-158526 Gauge

See D-158526 gauge under 0.015 inch.

0.019 INCH

168E Gauge

Nonmagnetic thickness gauge used in adjusting the 324-, 325-, and 328-type switches. Same as 168A gauge (0.008 inch) except for thickness.

0.020 INCH

67B Gauge

For general use. Same as 67G gauge (0.003 inch) except for thickness.

80B Gauge

See 80B Gauge under 0.010 inch.

85C Gauge

For general use. Same as 85A gauge (0.005 inch) except for thickness.
A = 0.020 inch, B = 5 inches

91B Gauge

Nonmagnetic thickness gauge used on 218B relays and 169A interrupters. Same as 91A gauge (0.014 inch) except for thickness.
A = 0.020 inch

92G Gauge

Nonmagnetic thickness gauge for general use. Same as 92R gauge (0.0015 inch) except for thickness.

X-75515

95A Gauge

Used in gauging the back contact airgap on round-type relays.

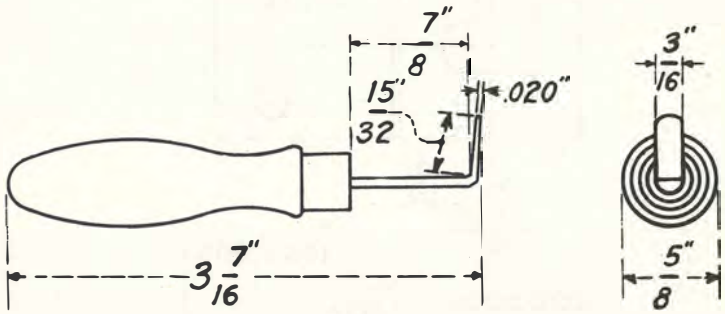

100D Gauge

For general use. Same as 100A gauge (0.005 inch) except for thickness.

0.020 INCH

126B Gauge

Used in adjusting coin collector relays and airgaps on ringers. Same as 126AC gauge (0.007 inch) except for thickness.

A = 0.020 inch, B = 0.028 inch, C = 3/8 inch

132F Gauge

Used in adjusting the armature travel and for spring gauging of U-, Y-, and UA-type relays. Same as 132AF gauge (0.004 inch) except for thickness.

140C Gauge

Used on crossbar switches and panel line finders and ringers. Same as 140A gauge (0.005 inch) except for thickness.

R-2144 Gauge

Used in checking 114- and 198-type relays. Same as R-2143 gauge (0.012 inch) except for thickness.

A = 0.017 inch, B = 0.020 inch, C = 0.023 inch, D = 0.023 inch

R-78067 Gauge

Used in checking reset of multiple brushes on selector frames.

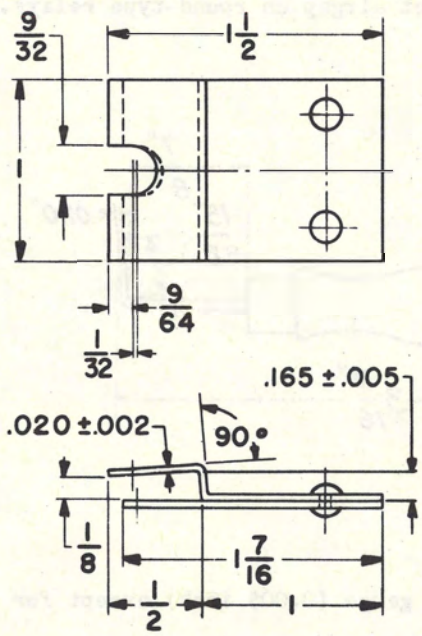

0.021 INCH

168F Gauge

Nonmagnetic thickness gauge used in adjusting the 324-, 325-, and 328-type switches. Same as 168A gauge (0.008 inch) except for thickness.

0.0215 INCH

172N Gauge

Used as armature gap spacers in the adjustment of wire spring relays. Same as 172A gauge (0.0015 inch) except for thickness.

0.022 INCH

73A Gauge

Used in gauging armature airgaps of the 208-type relays. Same as the 73D gauge (0.013 inch) except for thickness. A = 0.018" B = 0.022"

87A Gauge

Used on KS-6902 and KS-6903 relays, power-driven rotary selectors, panel line finder, and call distributing B-link elevator apparatus.

X-75515

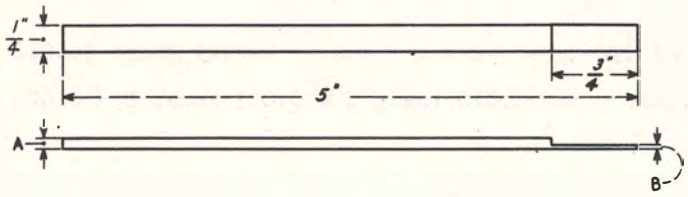

A = 0.040 inch, B = 0.022 inch

92F Gauge

Nonmagnetic thickness gauge for general use. Same as 92R gauge (0.0015 inch) except for thickness.

140F Gauge

Used on crossbar switches and panel line finders and ringers. Same as 140A gauge (0.005 inch) except for thickness.

0.022 INCH

168G Gauge

Nonmagnetic type gauge used in adjusting the 324-, 325-, and 328-type switches. Same as 168A gauge (0.008 inch) except for thickness.

0.023 INCH

67N Gauge

For general use. Same as 67G gauge (0.003 inch) except for thickness.

132G Gauge

Used in adjusting the armature travel and for spring gauging of U-, Y-, and UA-type relays. Same as 132AF gauge (0.004 inch) except for thickness.

172P Gauge

Used as armature gap spacers in the adjustment of wire spring relays. Same as 172A gauge (0.0015 inch) except for thickness.

R-2144 Gauge

Used in checking 114- and 198-type relays. Same as R-2143 gauge (0.012 inch) except for thickness.

A = 0.017 inch, B = 0.020 inch, C = 0.023 inch, D = 0.023 inch

0.024 INCH

82B Gauge

See 82B gauge under 0.016 inch.

85D Gauge

For general use. Same as 85A gauge (0.005 inch) except for thickness.

A = 0.024 inch, B = 5 inches

0.025 INCH

67C Gauge

For general use. Same as 67G gauge (0.003 inch) except for thickness.

92H Gauge

Nonmagnetic thickness gauge for general use. Same as 92R gauge (0.0015 inch) except for thickness.

97A Gauge

See 97A gauge under 0.015 inch.

100E Gauge

For general use. Same as 100A gauge (0.005 inch) except for thickness.

140E Gauge

Used on crossbar switches and panel line finders and ringers. Same as 140A gauge (0.005 inch) except for thickness.

X-75515

0.0255 INCH

172R Gauge

Used as armature gap spacers in the adjustment of wire spring relays. Same as 172A gauge (0.0015 inch) except for thickness.

0.026 INCH

132H Gauge

Used in adjusting the armature travel and for spring gauging of U-, Y-, and UA-type relays. Same as 132AF gauge (0.004 inch) except for thickness.

0.026 INCH

175A Gauge

Used for adjusting the armature backstop screw gaps of KS-13882 Perforators in AMA systems.

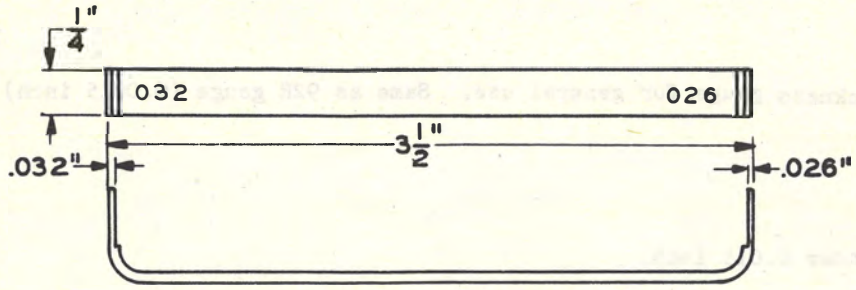

0.027 INCH

172S Gauge

Used as armature gap spacers in the adjustment of wire spring relays. Same as 172A gauge (0.0015 inch) except for thickness.

R-2145 Gauge

Used in checking 114- and 198-type relays. Same as R-2143 gauge (0.012 inch) except for thickness.

A = 0.027 inch, B = 0.030 inch, C = 0.033 inch, D = 0.033 inch

0.028 INCH

81 Gauge

Used in measuring the airgap between the bent end of armature and the case of the trip magnet on clutches.

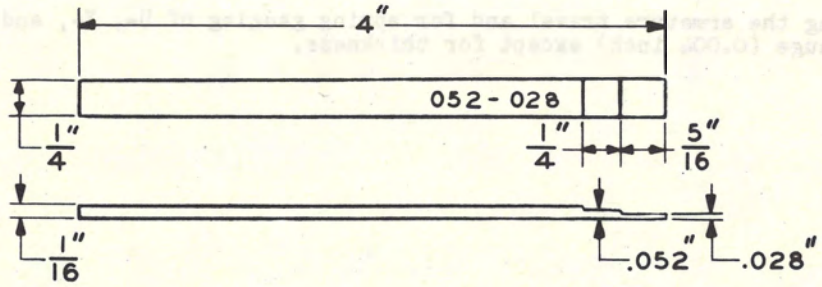

0.028 INCH

126B Gauge

Used in adjusting coin collector relays and airgaps on ringers. Same as 126AC gauge (0.007 inch) except for thickness.

A = 0.020 inch, B = 0.028 inch, C = 3/8 inch

0.029 INCH

132J Gauge

Used in adjusting the armature travel and for spring gauging of U-, Y-, and UA-type relays. Same as 132AF gauge (0.004 inch) except for thickness.

0.030 INCH

67D Gauge

For general use. Same as 67G gauge (0.003 inch) except for thickness.

X-75515

80B Gauge

See 80B gauge under 0.010 inch.

87B Gauge

Used on KS-6902 and KS-6903 relays, power-driven rotary selectors, panel line finder, and call distributing B link elevator apparatus. Same as 87A gauge (0.022 inch) except for thickness.

A = 0.045 inch, B = 0.030 inch

90 Gauge

Used in gauging the back contact airgap on round-type relays.

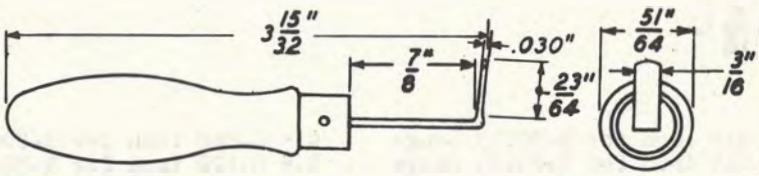

0.030 INCH

92J Gauge

Nonmagnetic thickness gauge. For general use. Same as 92R gauge (0.0015 inch) except for thickness.

100F Gauge

For general use. Same as 100A gauge (0.005 inch) except for thickness.

101A Gauge

For general use. See 100A gauge under 0.005 inch.

126C Gauge

Used in adjusting coin collector relays and airgaps on ringers. Same as 126AC gauge (0.007 inch) except for thickness.

A = 0.030 inch, B = 0.040 inch, C = 3/8 inch

R-2145 Gauge

Used in checking 114- and 198-type relays. Same as R-2143 gauge (0.012 inch) except for thickness.

A = 0.027 inch, B = 0.030 inch, C = 0.033 inch, D = 0.033 inch

R-80223 Gauge

Used in checking 197- and 198-type switches.

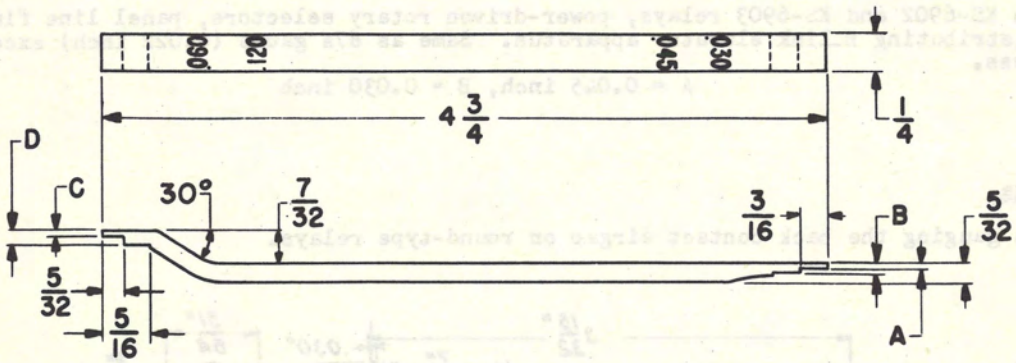

A = 0.030 inch for R-80223 Gauge
B = 0.045 inch for R-80223 Gauge
C = 0.060 inch for R-80223 Gauge
D = 0.120 inch for R-80223 Gauge

0.031 INCH

168H Gauge

Nonmagnetic thickness gauge used in adjusting the 324-, 325-, and 328-type switches. Same as 168A gauge (0.008 inch) except for thickness.

172T Gauge

Used as armature gap spacers in the adjustment of wire spring relays. Same as 172A gauge (0.0015 inch) except for thickness.

R-2146 Gauge

Used in checking 114- and 198-type relays. Same as R-2143 gauge (0.012 inch) except for thickness.

A = 0.031 inch, B = 0.034 inch, C = 0.037 inch, D = 0.037 inch

0.032 INCH

132K Gauge

Used in adjusting the armature travel and for spring gauging of U-, Y-, and UA-type relays. Same as 132AF gauge (0.004 inch) except for thickness.

X-75515

141A Gauge

Used in measuring the gap between the armature stop disc and the magnet core on the 263- and 264-type relays.

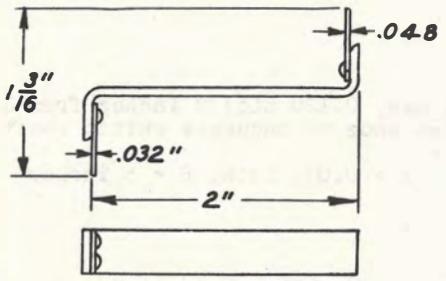

175A Gauge

See 175A gauge under 0.026 inch.

0.0325 INCH

172U Gauge

Used as armature gap spacers in the adjustment of wire spring relays. Same as 172A gauge (0.0015 inch) except for thickness.

0.033 INCH

R-2145 Gauge

Used in checking 114- and 198-type relays. Same as R-2143 gauge (0.012 inch) except for thickness.

A = 0.027 inch, B = 0.030 inch, C = 0.033 inch, D = 0.033 inch

0.034 INCH

41 Gauge

Used for gauging the airgap between the back contact and the armature feather spring of 114- and 198-type relays. Mounted in wooden handle.

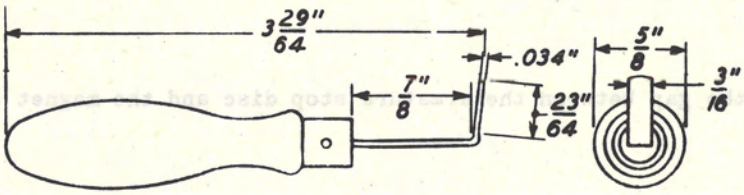

85E Gauge

For general use. Hole (0.121 max, 0.120 min) 2 inches from left end and located centrally provided for checking the drive ends of sequence switch shafts. Same as 85A gauge (0.005 inch) except for thickness.

A = 0.034 inch, B = 5 inches

168J Gauge

Nonmagnetic thickness gauge used in adjusting the 324-, 325-, and 328-type switches. Same as 168A gauge (0.008 inch) except for thickness.

0.034 INCH

R-2146 Gauge

Used in checking 114- and 198-type relays. Same as R-2143 gauge (0.012 inch) except for thickness.

A = 0.031 inch, B = 0.034 inch, C = 0.037 inch, D = 0.037 inch

0.035 INCH

67E Gauge

For general use. Same as 67G gauge (0.003 inch) except for thickness.

80B Gauge

See 80B gauge under 0.010 inch.

92K Gauge

Nonmagnetic thickness gauge for general use. Same as 92R gauge (0.0015 inch) except for thickness.

X-75515

100G Gauge

For general use. Same as 100A gauge (0.005 inch) except for thickness.

101B Gauge

For general use. See 100A gauge under 0.005 inch.

132L Gauge

Used in adjusting the armature travel and for spring gauging of U-, Y-, and UA-type relays. Same as 132AF gauge (0.004 inch) except for thickness.

0.036 INCH

77C Gauge

Used in checking the latch magnet airgaps at the center line of the core of the 214A selector.

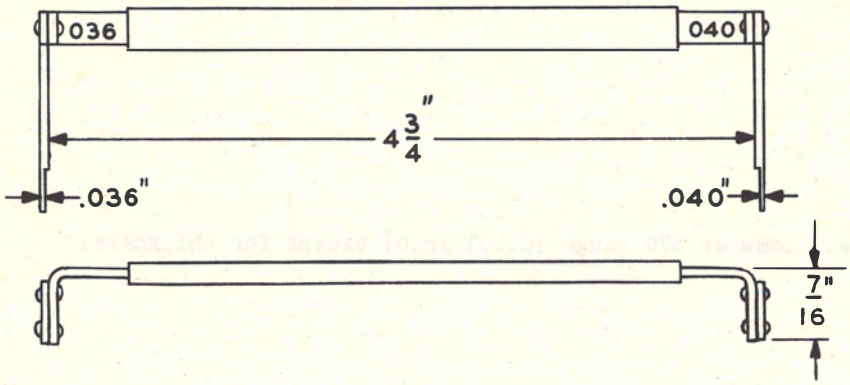

0.0365 INCH

172W Gauge

Used as armature gap spacers in the adjustment of wire spring relays. Same as 172A gauge (0.0015 inch) except for thickness.

0.037 INCH

168K Gauge

Nonmagnetic thickness gauge used in adjusting the 324-, 325-, and 328-type switches. Same as 168A gauge (0.008 inch) except for thickness.

R-2146 Gauge

Used in checking 114- and 198-type relays. Same as R-2143 gauge (0.012 inch) except for thickness.

A = 0.031 inch, B = 0.034 inch, C = 0.037 inch, D = 0.037 inch

0.038 INCH

168T Gauge

Non-magnetic thickness gauge used in adjusting 324-, 325- and 328-type switches. Same as 168A Gauge (0.008 inch) except for thickness.

0.038 INCH

132M Gauge

Used in adjusting the armature travel and for spring gauging of U-, Y-, and UA-type relays. Same as 132AF gauge (0.004 inch) except for thickness.

172Y Gauge

Used as armature gap spacers in the adjustment of wire spring relays. Same as 172A gauge (0.0015 inch) except for thickness.

0.040 INCH

67F Gauge

For general use. Same as 67G gauge (0.003 inch) except for thickness.

77C Gauge

See 77C gauge under 0.036 inch.

X-75515

87A Gauge

See 87A gauge under 0.022 inch.

92L Gauge

Nonmagnetic thickness gauge for general use. Same as 92R gauge (0.0015 inch) except for thickness.

100H Gauge

For general use. Same as 100A gauge (0.005 inch) except for thickness.

101C Gauge

For general use. See 100A gauge under 0.005 inch.

0.040 INCH

112A Gauge

Used in checking the interrupter airgap on 206-type selectors in dial and manual systems.

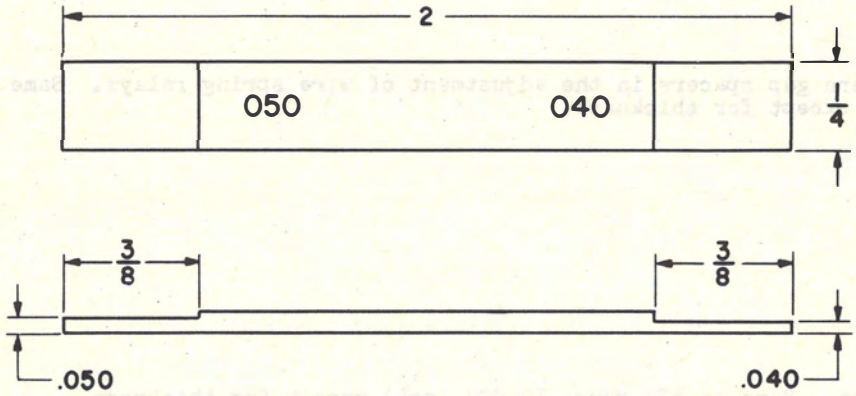

126C Gauge

Used in adjusting coin collector relays and airgaps on ringers. Same as 126AC gauge (0.007 inch) except for thickness.

A = 0.030 inch, B = 0.040 inch, C = 3/8 inch

132AH Gauge

Used in checking the clearance between the latch arm and the movable card of the 214A selectors used in one type translators. Same as 132A gauge (0.008 inch) except for thickness.

168L Gauge

Nonmagnetic thickness gauge used in adjusting the 324-, 325-, and 328-type switches. Same as 168A gauge (0.008 inch) except for thickness.

0.041 INCH

132N Gauge

Used in adjusting the armature travel and for spring gauging of U-, Y-, and UA-type relays. Same as 132AF gauge (0.004 inch) except for thickness.

0.041 INCH

R-2334 Gauge

Used in checking trip magnet armature gap furthest away from fulcrum. 0.041 inch thick gauge end is made of steel.

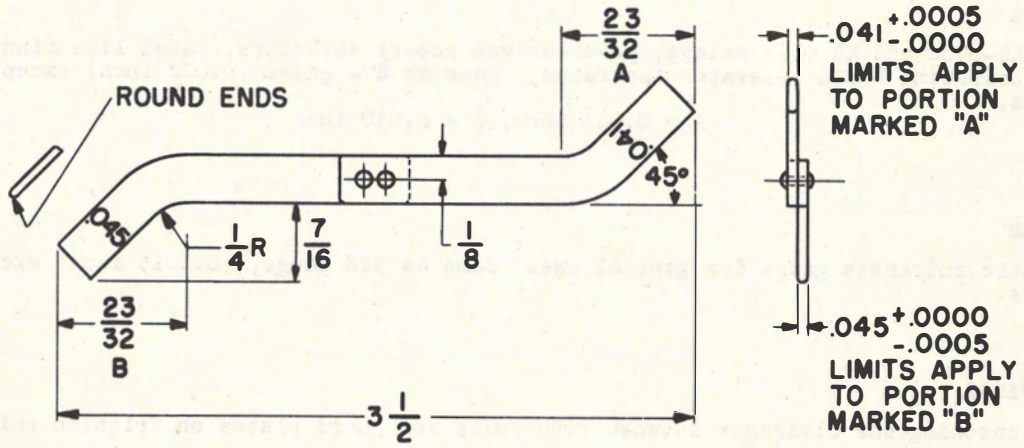

0.044 INCH

77C Gauge

See 77C gauge under 0.036 inch.

X-75515

78 Gauge

Used in adjusting airgap of stepping magnet of the 50A dial tester.

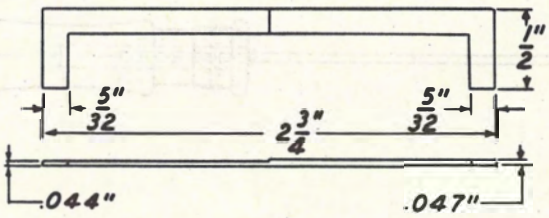

132P Gauge

Used in adjusting the armature travel and for spring gauging of U-, Y-, and UA-type relays. Same as 132AF gauge (0.004 inch) except for thickness.

0.045 INCH

67P Gauge

For general use. Same as 67G gauge (0.003 inch) except for thickness.

87B Gauge

Used on KS-6902 and KS-6903 relays, power-driven rotary selectors, panel line finder, and call distributing B-link elevator apparatus. Same as 87A gauge (0.022 inch) except for thickness.

A = 0.045 inch, B = 0.030 inch

92M Gauge

Nonmagnetic thickness gauge for general use. Same as 92R gauge, (0.0015 inch) except for thickness.

R-2058 Gauge

Used in checking the clearance between cork rolls and guard plates on friction roll drives.

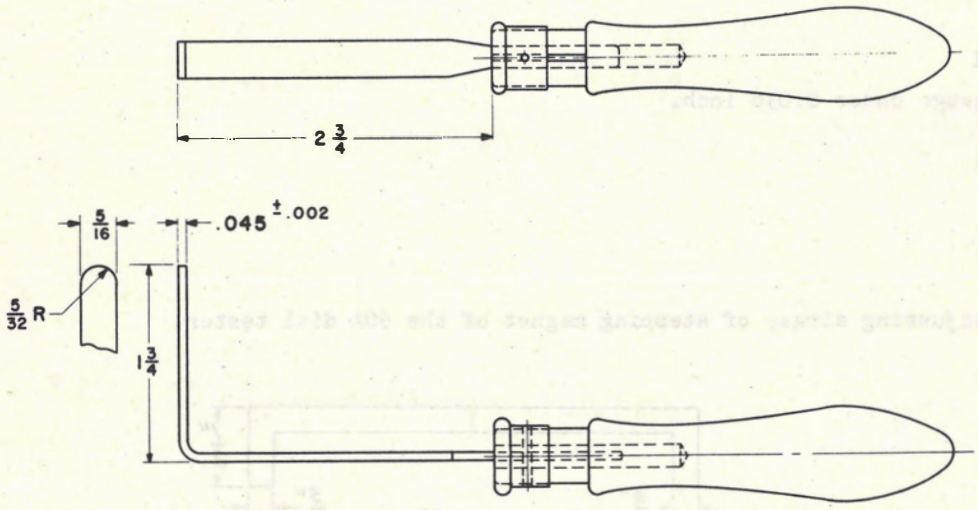

R-2334 Gauge

See R-2334 gauge under 0.041 inch.

R-80223 Gauge

See R-80223 gauge under 0.030 inch.

0.047 INCH

78 Gauge

See 78 gauge under 0.044 inch.

109A Gauge

Used in checking the armature travel of the 229- and 230-type relays in panel-type dial systems.

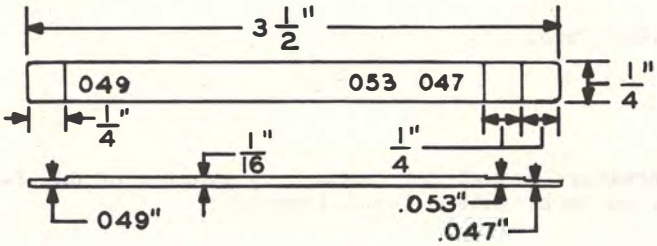

132R Gauge

Used in adjusting the armature travel and for spring gauging of U-, Y-, and UA-type relays. Same as 132AF gauge (0.004 inch) except for thickness.

X-75515

0.048 INCH

77C Gauge

See 77C gauge under 0.036 inch.

141A Gauge

See 141A gauge under 0.032 inch.

0.049 INCH

109A Gauge

See 109A gauge under 0.047 inch.

0.050 INCH

92N Gauge

Nonmagnetic thickness gauge for general use. Same as 92R gauge (0.0015 inch) except for thickness.

101D Gauge

For general use. See 100A gauge under 0.005 inch.

112A Gauge

See 112A gauge under 0.040 inch.

132S Gauge

Used in adjusting the armature travel and for spring gauging of U-, Y-, and UA-type relays. Same as 132AF gauge (0.004 inch) except for thickness.

161A Gauge

Used in measuring wear of plungers and plunger openings in 524 keys employed for keypulsing purposes.

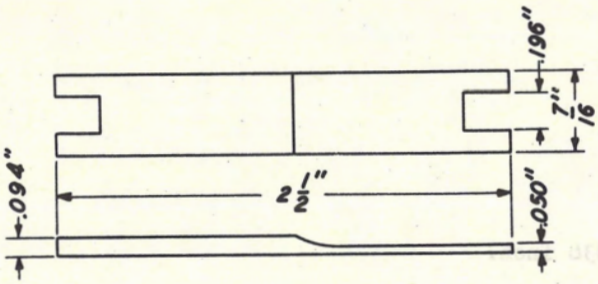

0.052 INCH

81 Gauge

See 81 Gauge under 0.028 inch.

168N Gauge

Nonmagnetic thickness gauge used in adjusting the 324-, 325-, and 328-type switches. Same as 168A gauge (0.008 inch) except for thickness.

0.053 INCH

109A Gauge

See 109A gauge under 0.047 inch.

132T Gauge

Used in adjusting the armature travel and for spring gauging of U-, Y-, and UA-type relays. Same as 132AF gauge (0.004 inch) except for thickness.

0.055 INCH

126D Gauge

Used in adjusting coin collector relays and airgaps on ringers. Same as 126AC gauge (0.007 inch) except for thickness.

A = 0.055 inch, B = 0.065 inch, C = 3/8 inch

0.056 INCH

132U Gauge

Used in adjusting the armature travel and for spring gauging of U-, Y-, and UA-type relays. Same as 132AF gauge (0.004 inch) except for thickness.

X-75515

0.059 INCH

132W Gauge

Used in adjusting the armature travel and for spring gauging of U-, Y-, and UA-type relays. Same as 132AF gauge (0.004 inch) except for thickness.

0.060 INCH

91C Gauge

Nonmagnetic thickness gauge used on 218B relays. Same as 91A gauge (0.014 inch) except for thickness.

A = 0.060 inch

0.060 INCH

101E Gauge

For general use. See 100A gauge under 0.005 inch.

132AJ Gauge

Used in checking the clearance between the latch arm and the movable card of the 214A selectors used in one-type translators. Same as 132AF gauge (0.004 inch) except for thickness.

R-80223 Gauge

See R-80223 gauge under 0.030 inch.

0.062 INCH

132Y Gauge

Used in adjusting the armature travel and for spring gauging of U-, Y-, and UA-type relays. Same as 132AF gauge (0.004 inch) except for thickness.

0.065 INCH

126D Gauge

Used in adjusting coin collector relays and airgaps on ringers. Same as 126AC gauge (0.007 inch) except for thickness.

A = 0.055 inch, B = 0.065 inch, C = 3/8 inch

132AA Gauge

Used in adjusting the armature travel and for spring gauging of U-, Y-, and UA-type relays. Same as 132AF gauge (0.004 inch) except for thickness.

0.068 INCH

118A Gauge

Used in measuring airgaps of clutches in panel-type dial systems.

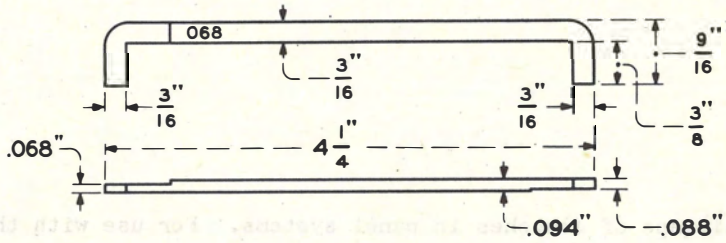

132AB Gauge

Used in adjusting the armature travel and for spring gauging of U-, Y-, and UA-type relays. Same as 132AF gauge (0.004 inch) except for thickness.

0.071 INCH

132AC Gauge

Used in adjusting the armature travel and for spring gauging of U-, Y-, and UA-type relays. Same as 132AF gauge (0.004 inch) except for thickness.

X-75515

0.074 INCH

132AD Gauge

Used in adjusting the armature travel and for spring gauging of U-, Y-, and UA-type relays. Same as 132AF gauge (0.004 inch) except for thickness.

0.076 INCH

168P Gauge

Nonmagnetic thickness gauge used in adjusting the 324-, 325- and 328-type switches. Same as 168A gauge (0.008 inch) except for thickness.

0.080 INCH

83B Gauge

Used in measuring airgaps of clutches in panel systems. For use with the down-drive magnets.

B = 4-1/4 inches

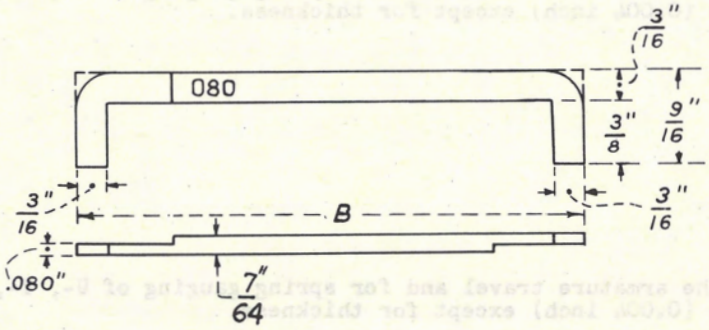

0.082 INCH

119A Gauge

Used on reed spring-type clutches.

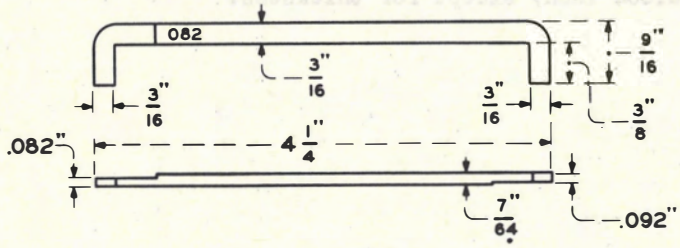

0.083 INCH

168S Gauge

Nonmagnetic thickness gauge used in adjusting the 324-, 325-, and 328-type switches. Same as 168A gauge (0.008 inch) except for thickness.

0.088 INCH

118A Gauge

See 118A gauge under 0.068 inch.

0.090 INCH

168R Gauge

Nonmagnetic thickness gauge used in adjusting the 324-, 325-, and 328-type switches. Same as 168A gauge (0.008 inch) except for thickness.

X-75515

0.092 INCH

119A Gauge

See 119A gauge under 0.082 inch.

0.094 INCH

161A Gauge

See 161A gauge under 0.050 inch.

0.100 INCH

83B Gauge

See 83B gauge under 0.080 inch.

0.100 INCH

137A Gauge

Used in locating selecting off-normal and centering spring assemblies on switches.

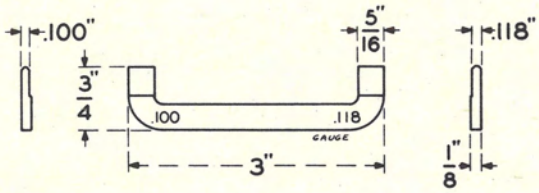

0.105 INCH

R-2310 Gauge

Used in setting distance between guide comb and bank terminals on multiple banks. May be made from steel or hard rubber.

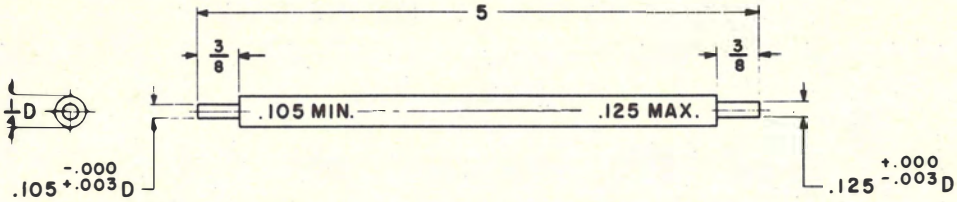

0.110 INCH

84B Gauge

Used in measuring airgaps of clutches in panel systems. For use with the up-drive magnets.

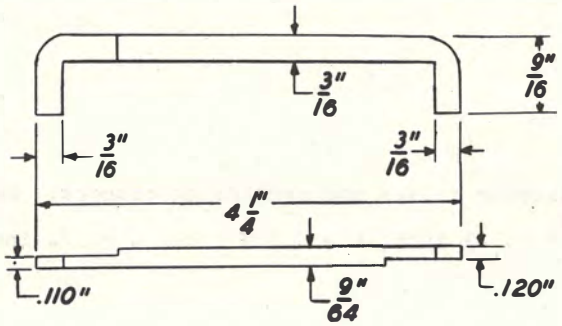

0.118 INCH

137A Gauge

See 137A gauge under 0.100 inch.

X-75515

0.120 INCH

84B Gauge

See 84B gauge under 0.110 inch.

R-80223 Gauge

See R-80223 gauge under 0.030 inch.

0.123 INCH

126E Gauge

Used in adjusting coin collector relays and airgaps on ringers. Same as 126AC gauge (0.007 inch) except for thickness.

A = 0.123 inch, B = 0.129 inch, C = 1/4 inch

0.125 INCH

R-2310 Gauge

See R-2310 gauge under 0.105 inch.

0.129 INCH

126E Gauge

Used in adjusting coin collector relays and airgaps on ringers. Same as 126AC gauge (0.007 inch) except for thickness.

A = 0.123 inch, B = 0.129 inch, C = 1/4 inch

0.165 INCH

R-78067 Gauge

See R-78067 gauge under 0.020 inch.

0.178 INCH

173A Gauge

Used in checking the clearance between the top of the code bar and the up stop of the 4A apparatus unit when the code bar is depressed against the down stop.

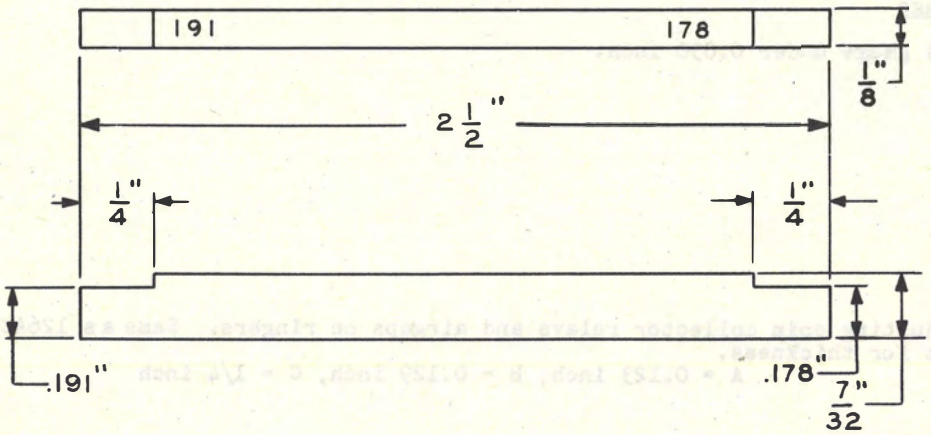

0.191 INCH

173A Gauge

See 173A gauge under 0.178 inch.

0.247 INCH

104A Gauge

Used in checking the position of the commutator brush spring on line finder commutator brushes.

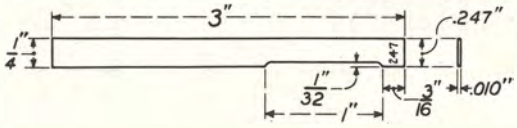

THICKNESS GAUGE NESTS

43 Gauge

Thickness gauge nest consisting of one 0.012 inch gauge and one 0.016 inch gauge held by a brass ring having a tag marked "Magneto Bell Gauge."

X-75515

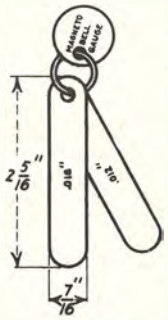

THICKNESS GAUGE NESTS

66D Gauge

Thickness gauge nest consisting of 67A to 67P gauges, inclusive, assembled on a holding ring.

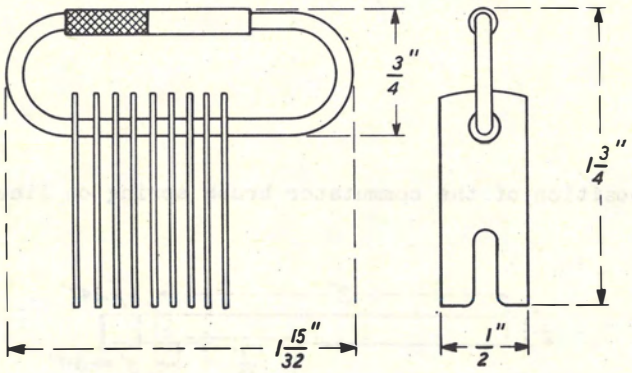

GAUGES	THICKNESS (in inches)	GAUGES	THICKNESS (in inches)
67A	0.015	67H	0.004
67B	0.020	67J	0.008
67C	0.025	67K	0.005
67D	0.030	67L	0.006
67E	0.035	67M	0.010
67F	0.040	67N	0.023
67G	0.003	67P	0.045

THICKNESS GAUGE NESTS

74D Gauge

Thickness gauge nest consisting of 75B, 75C, 75D, 75E, 75F, 75G, 75H, 75J, 75K, 75L, 75M, and 75N gauges, assembled on a handle.

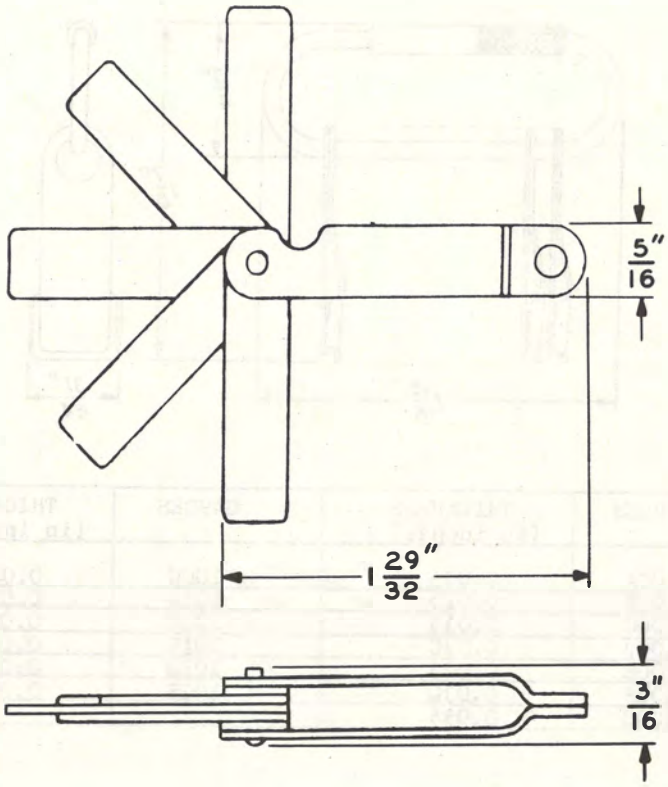

X-75515

GAUGES	THICKNESS (in inches)	GAUGES	THICKNESS (in inches)
75B	0.003	75H	0.018
75C	0.004	75J	0.007
75D	0.005	75K	0.009
75E	0.006	75L	0.011
75F	0.002	75M	0.010
75G	0.012	75N	0.008

THICKNESS GAUGE NESTS

99A Gauge

Thickness gauge nest consisting of 100A to 100H gauges, inclusive, and 101A to 101E gauges, inclusive, assembled on a holding ring.

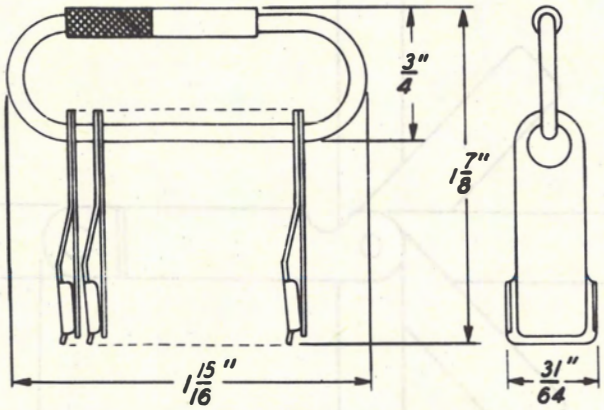

GAUGES	THICKNESS (in inches)	GAUGES	THICKNESS (in inches)
100A	0.005	100H	0.040
100B	0.010	101A	0.030
100C	0.015	101B	0.035
100D	0.020	101C	0.040
100E	0.025	101D	0.050
100F	0.030	101E	0.060
100G	0.035		

THICKNESS GAUGE NESTS

131A Gauge

Thickness gauge nest consisting of 132A to 132AG gauges, inclusive, assembled on a holding ring.

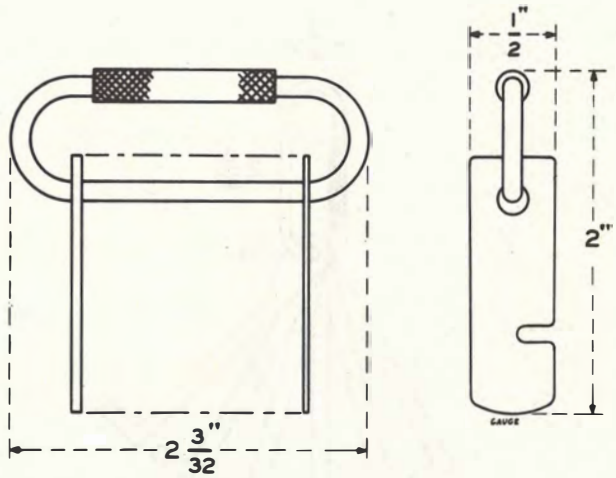

GAUGES	THICKNESS (in inches)	GAUGES	THICKNESS (in inches)
132A	0.008	132R	0.047
132B	0.010	132S	0.050
132C	0.013	132T	0.053
132D	0.015	132U	0.056
132E	0.017	132W	0.059
132F	0.020	132Y	0.062
132G	0.023	132AA	0.065
132H	0.026	132AB	0.068
132J	0.029	132AC	0.071
132K	0.032	132AD	0.074
132L	0.035	132AE	0.018
132M	0.038	132AF	0.004
132N	0.041	132AG	0.006
132P	0.044		

X-75515

THICKNESS GAUGE NESTS

139A Gauge

Thickness gauge nest consisting of 140A to 140F gauges, inclusive, assembled on a holding ring.

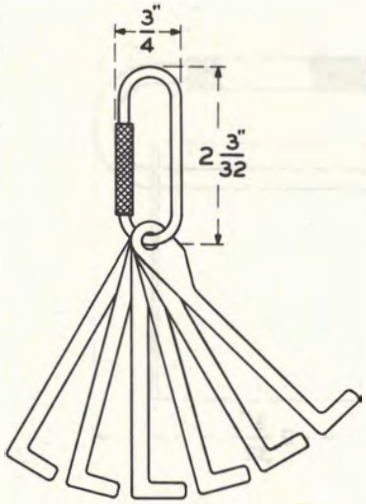

GAUGE	THICKNESS (in inches)	GAUGE	THICKNESS (in inches)
140A	0.005	140D	0.015
140B	0.010	140E	0.025
140C	0.020	140F	0.022

THICKNESS GAUGE NESTS

171A Gauge

Thickness gauge nest consisting of 172A to 172H, inclusive; 172J to 172N, inclusive; 172P; 172R to 172U, inclusive; 172W and 172Y gauges assembled on a holding ring.

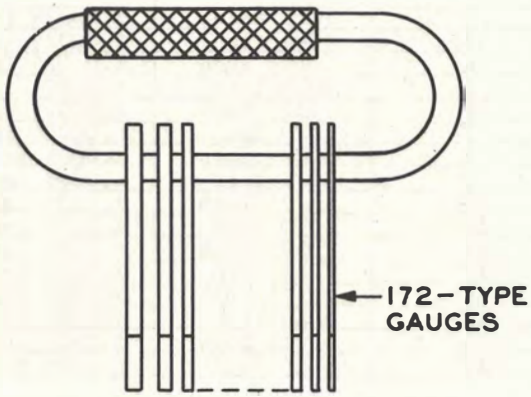

GAUGE	THICKNESS (in inches)	GAUGE	THICKNESS (in inches)
172A	0.0015	172L	0.0145
172B	0.003	172M	0.016
172C	0.0035	172N	0.0215
172D	0.0045	172P	0.023
172E	0.005	172R	0.0255
172F	0.007	172S	0.027
172G	0.0085	172T	0.031
172H	0.010	172U	0.0325
172J	0.012	172W	0.0365
172K	0.0135	172Y	0.038

X-75515

THICKNESS GAUGE NESTS

R-2465 Gauge

Thickness gauge nest consisting of 16 gauges assembled on a holding ring. Used for checking and adjusting the armature travel and contact follow of flat-type relays.

Detail No.	Thickness	Tolerance
2	.003 inch	±.00025 inch
3	.004 inch	±.00025 inch
4	.0125 inch	±.00025 inch
5	.015 inch	±.00025 inch
6	.0175 inch	±.00025 inch
7	.020 inch	±.00025 inch
8	.0225 inch	±.0005 inch
9	.025 inch	±.0005 inch
10	.0275 inch	±.0005 inch
11	.030 inch	±.0005 inch
12	.0325 inch	±.0005 inch
13	.035 inch	±.0005 inch
14	.0375 inch	±.0005 inch
15	.040 inch	±.0005 inch
16	.0425 inch	±.0005 inch
17	.045 inch	±.0005 inch

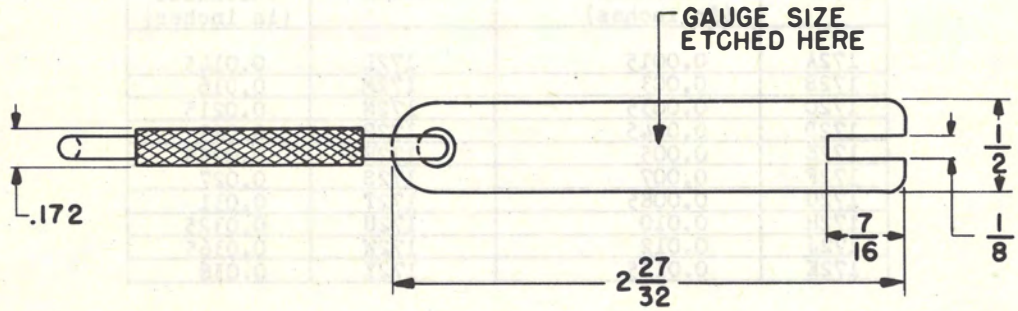

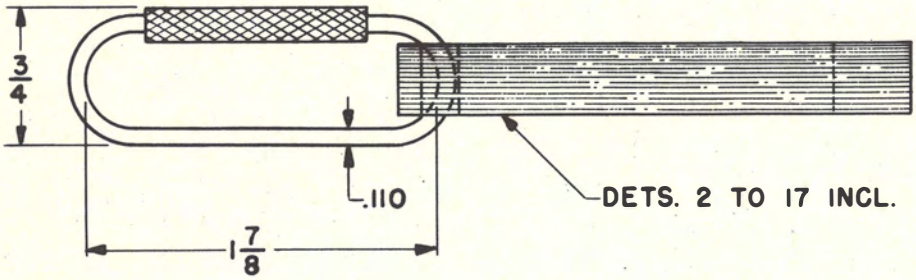

THICKNESS GAUGE NESTS

KS-6909 Thickness Gauge Nest

Consists of 26 offset thickness gauges assembled on a holding ring. This includes two feelers 0.0015 inch thick and one feeler of each thickness from 0.002 inch to 0.025 inch, inclusive in steps of 0.001 inch.

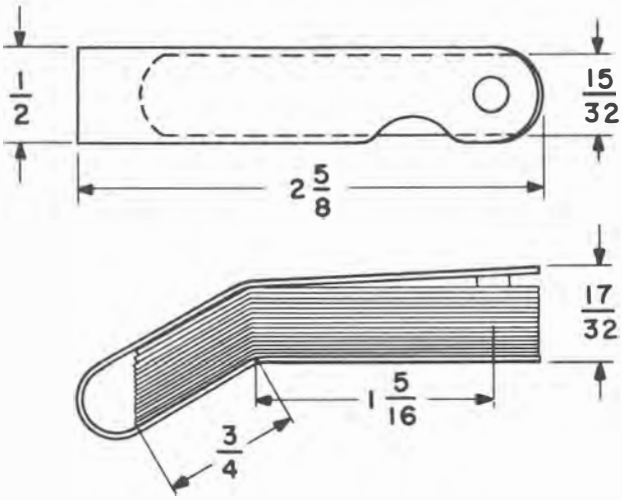

KS-6938 Thickness Gauge Nest

X-75515

Consists of 15 offset thickness gauges assembled on a holding ring. Includes one feeler of each size from 0.026 inch to 0.040 inch, inclusive, in steps of 0.001 inch.

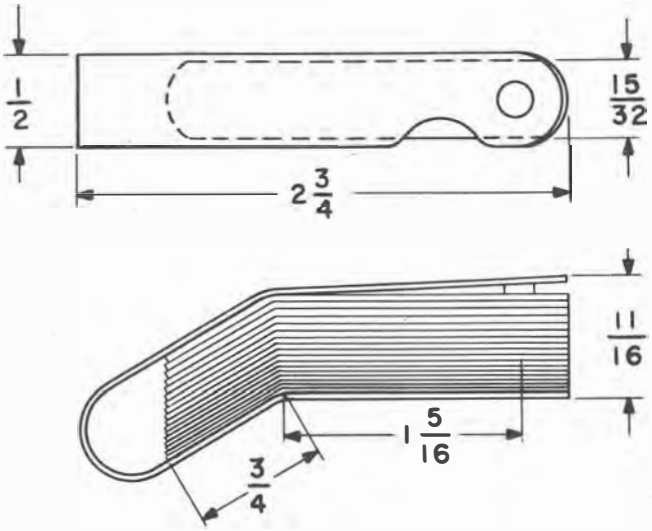

GAUGES FOR SPECIFIC APP
SECTIONS 29-32

61 Gauge

Used in replacing panel multiple banks in their former adjusted positions. A minimum of two gauges is required in replacing the bank.

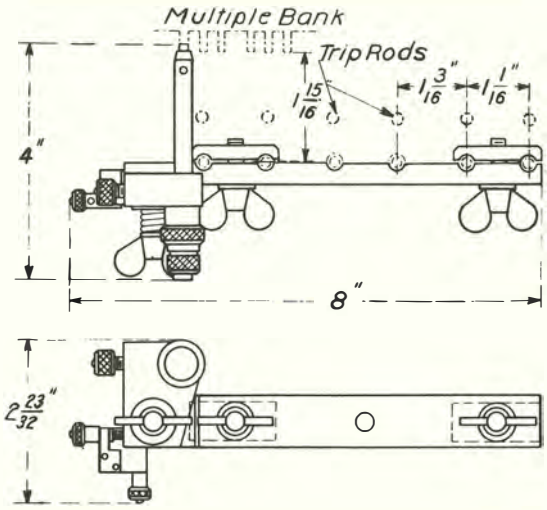

116A Gauge

Used in checking the vertical spacing of 100-point multiple bank terminals in panel systems. The entire gauge, except the marking surfaces, is insulated with a coating of hard rubber.

X-75515

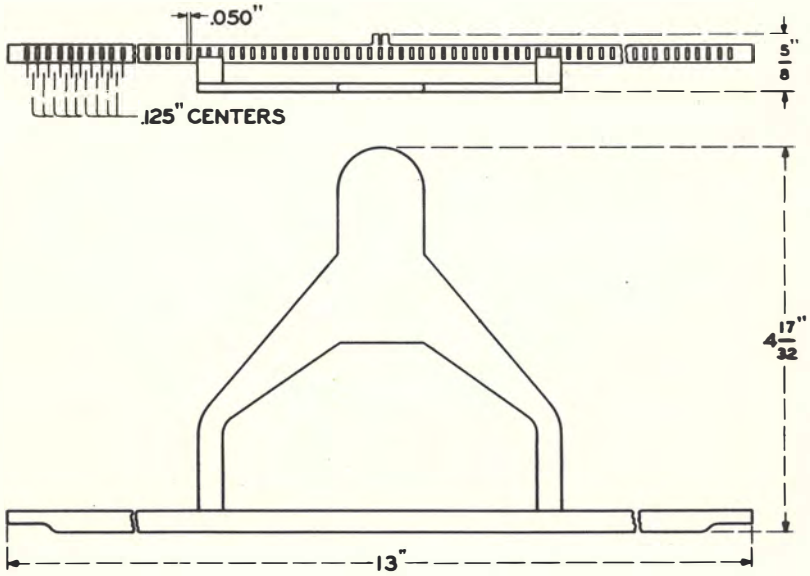

149A Gauge

Used in measuring armature travel at the core gap of reed spring-type clutches in panel-type dial system apparatus. Measurements are made by means of an adjustable calibrated screw.

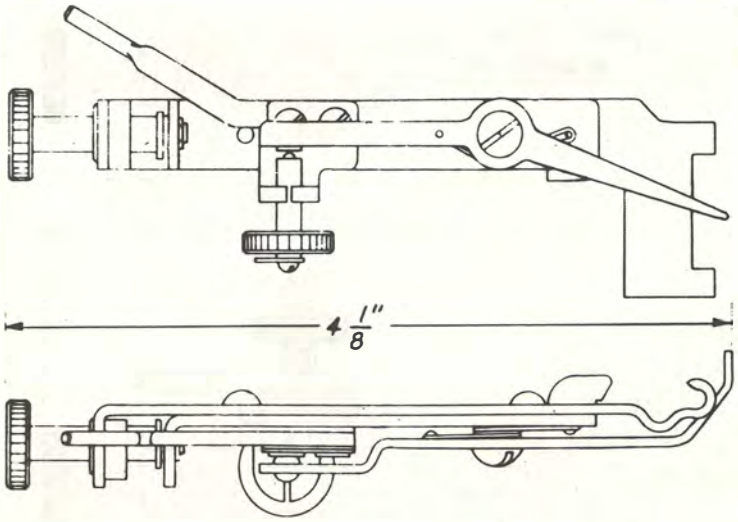

150A Gauge

Used for measuring the screw gap of the clutch. Measurements are made by means of an adjustable calibrated screw.

X-75515

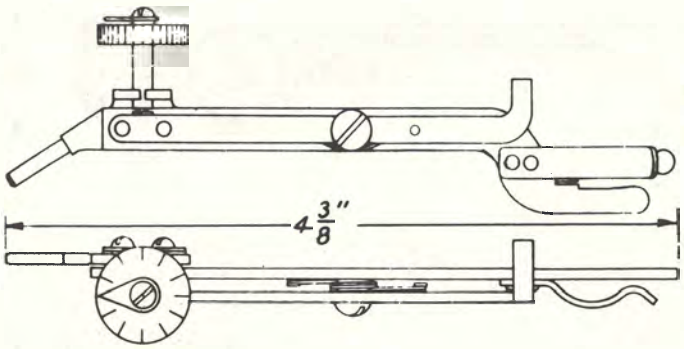

162B Gauge

Used in conjunction with the 163B gauge when adjusting helical spring clutches such as the 1A and 4A clutches in panel-type dial telephone systems. It determines whether or not the armature has operated.

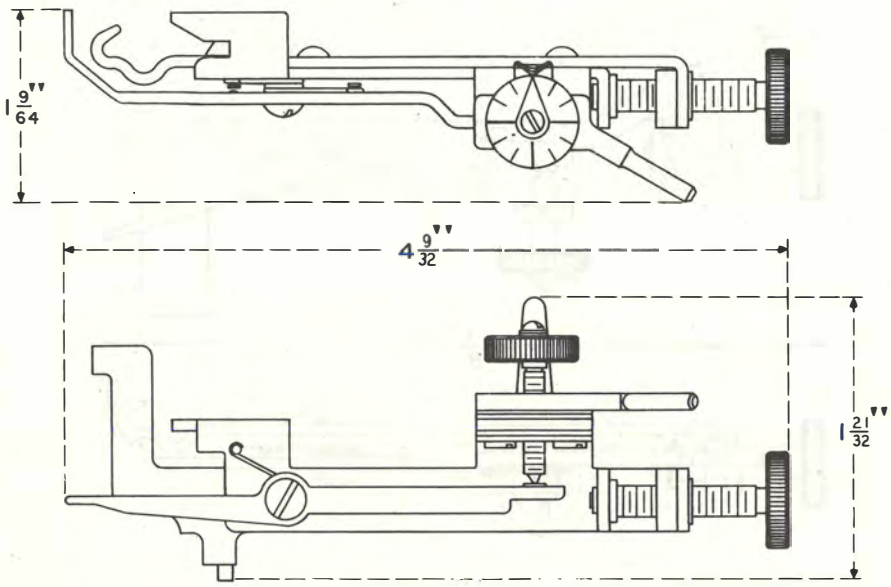

163B Gauge

Used for measuring the screw gap of the clutch when adjusting helical spring clutches such as the 1A and 4A clutches in panel-type dial telephone systems.

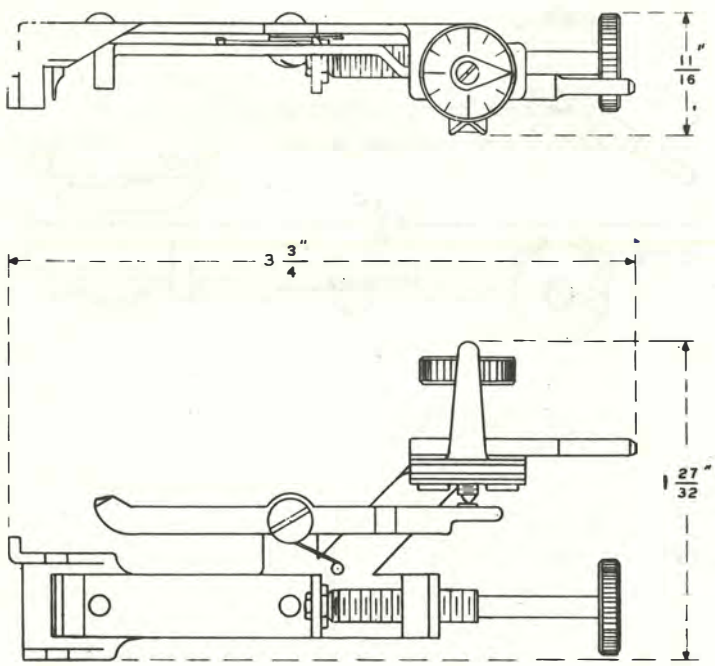

146A Gauge

Used in testing the armature bias margin of the coin relay in prepay multislot coin collectors. The gauge exerts a torque of 12 gram-inches on the armature and the relay must operate in the direction which will raise the weight.

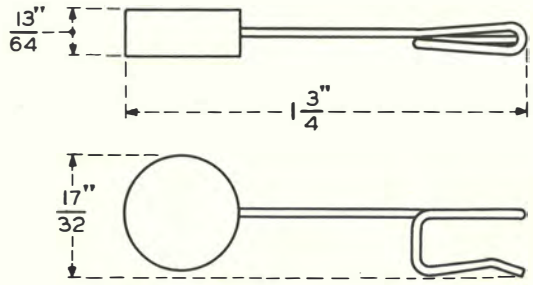

147A Gauge

Used in checking the restoring capability and contact pressure of the coin relay in prepay multislot coin collectors. The gauge will exert torques of 70±2 and min 50, max 55 gram-inches, respectively, on the operating arm in a coin relay. The gauge will exert torques on the switch lever corresponding to pressures of min 3, min 5, and max 7 grams, respectively, on the spring contacts.

X-75515

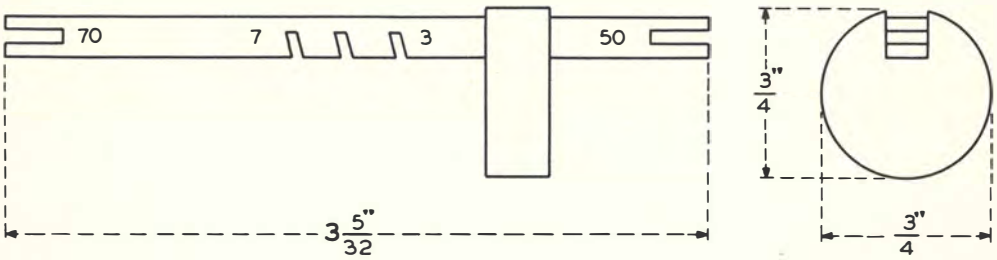

167A Gauge

Used in checking vertical play on coin collector upper housings.

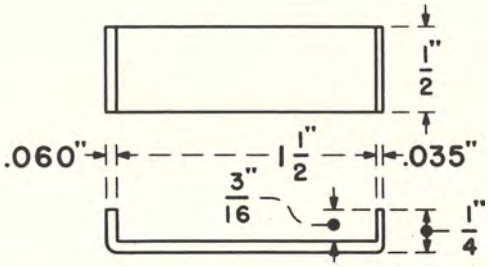

113B Gauge

Used in testing 92, 292, and other jacks functioning with 309-type plugs, to determine the possibility of cutouts in service. Equipped with black shell of insulating material.

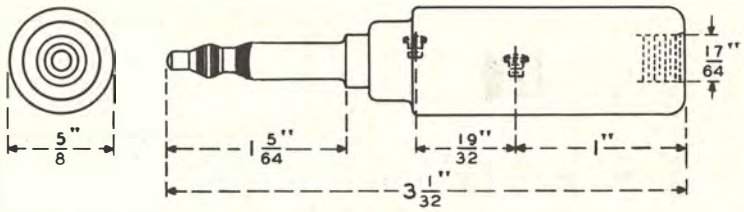

114B Gauge

Used in testing 92, 292, and other jacks functioning with 309-type plugs. Gauge determines whether jack springs, readjusted in maintenance, are so close to the sleeve center line as to butt with plugs in service. Equipped with a black shell of insulating material.

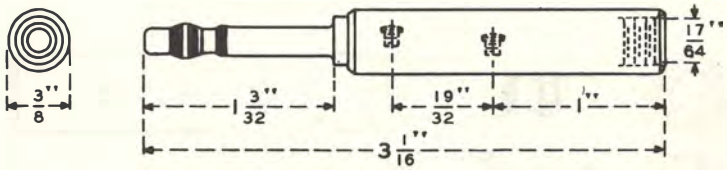

X-75515

115B Gauge

Used in testing 92, 292, and other jacks functioning with the 309-type plugs to determine whether springs, readjusted in maintenance, are likely to be crossed by a service plug fully inserted in the jack sleeve. Equipped with a black shell of insulating material.

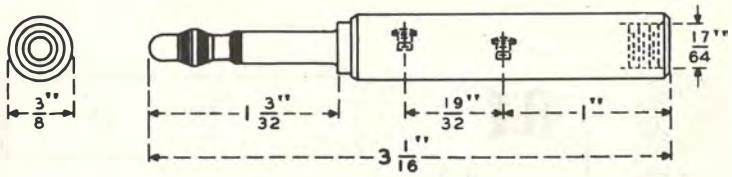

123B Gauge

Used on testing 149-type jacks used with 310-type plugs. Equipped with a black shell of insulating material. Used to determine the possibility of cutouts in service.

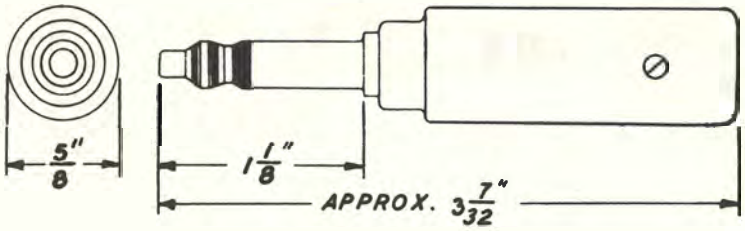

124B Gauge

Used in testing 149-type jacks used with 310-type plugs, to determine whether jack springs, readjusted in maintenance, are so close to the sleeve center line as to butt with plugs in service. Equipped with a black shell of insulating material.

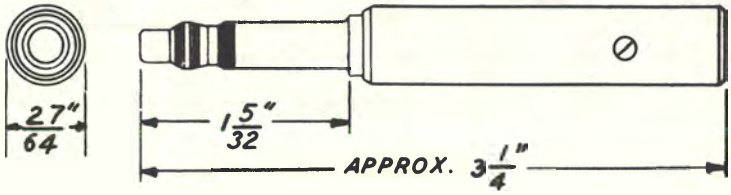

125B Gauge

Used in testing jacks used with the 310-type plug to determine whether springs, readjusted in maintenance, are likely to be crossed by a service plug fully inserted in the jack sleeve.

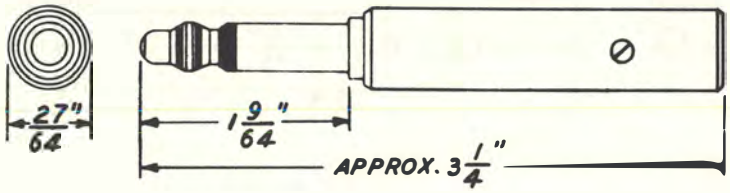

154A Gauge

Used in testing individually mounted jacks used with plugs having the 347-type plug profile to determine whether the tip spring, readjusted in maintenance, is so close to the sleeve center line as to butt with plugs in service; also, whether the crimp in this spring is at the proper distance from the face of the jack. Equipped with a black shell of insulating material.

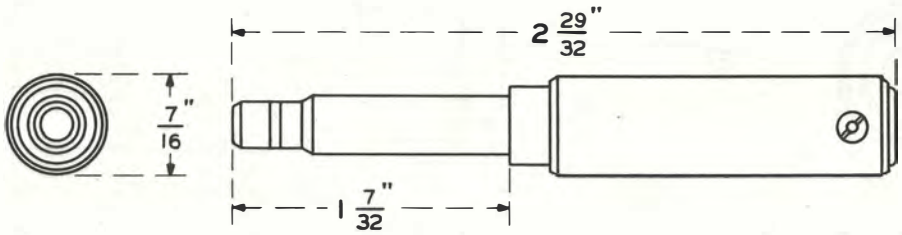

155A Gauge

Used in testing individually mounted 218-, 239-, and similar-t pe jacks to determine if the sleeve is worn to such an extent as to make maintenance repair of the jack inadvisable. Equipped with a black shell of insulating material.

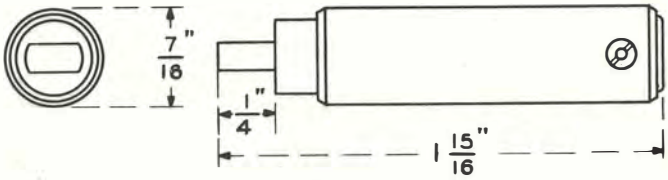

X-75515

156A Gauge

Used in testing individually mounted 239- and similar-type jacks to determine whether the springs, readjusted in maintenance, operate properly. Equipped with a black shell of insulating material.

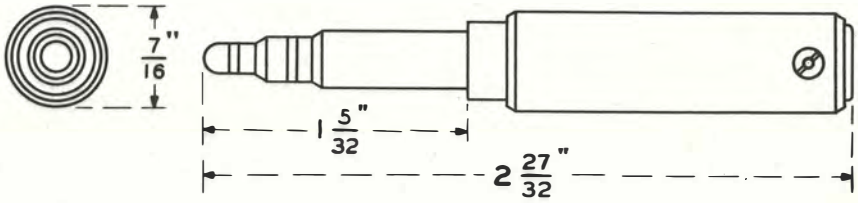

157A Gauge

Used in testing individually mounted jacks used with plugs having the 347-type plug profile to determine whether they make proper contact with plugs in service which are within prescribed wear limits.

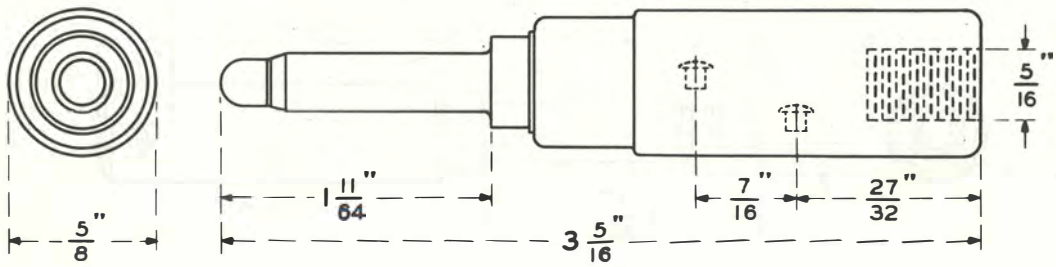

GAUGES FOR SPECIFIC APP
SECTIONS 33-36

106A and 111A Gauges

Used in testing 309- and 310-type plugs, respectively, without removing them from service, to determine whether or not they are suitable for further service and to provide means for straightening the plugs when it is necessary.

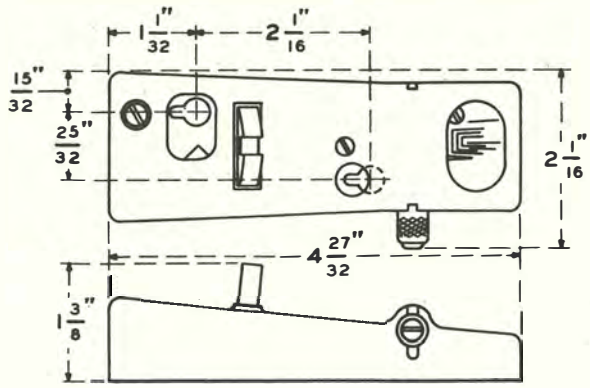

128A Gauge

Used at central offices in testing two conductor plugs such as 347-type and twin plugs of similar profile, without removing them from service, to determine whether or not they are suitable for further service.

X-75515

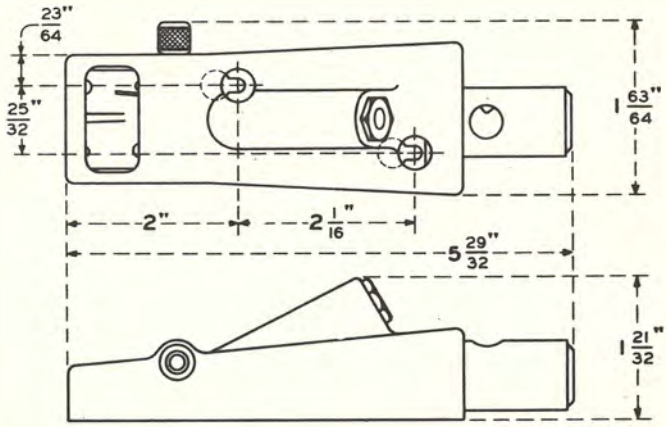

107A Gauge

Used in checking the armature airgap of the 89-, 101-, and 172-type relays.

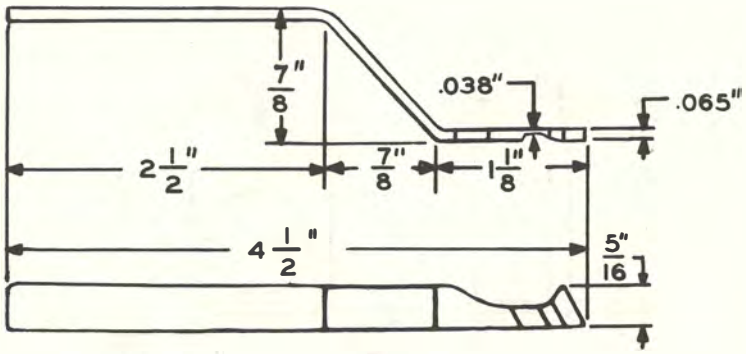

160A Gauge

Used in checking the armature overlap requirement on multicontact relays.

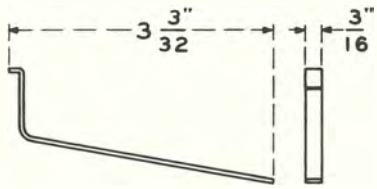

X-75515

165A Gauge

Used, in conjunction with the 164A and 164B gauges in gauging the position of the selecting fingers on switches in crossbar dial telephone systems. May be attached to hook of 164A and 164B gauges.

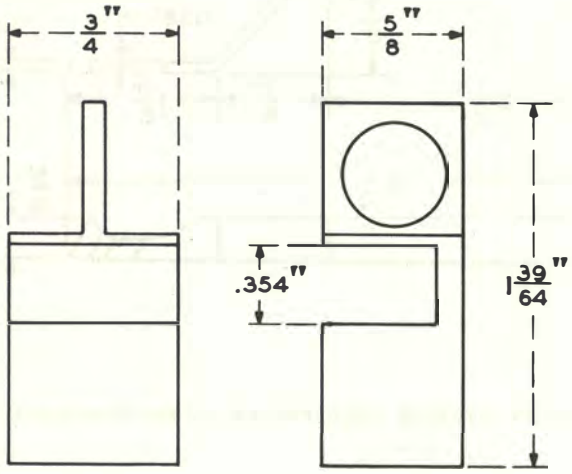

45 Gauge

Used in checking cutting of 18-position A and B sequence switch cams and consists of a graduated and numbered transparent celluloid disc with handle and pilot for locating cams in gauge.

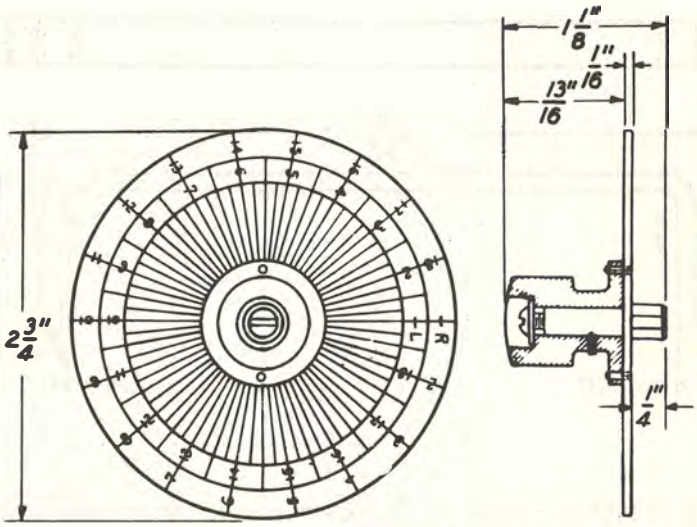

63 Gauge

X-75515

Used in panel-type dial equipments for checking cuttings of 20-position sequence switch cams. Consists of a graduated and numbered transparent celluloid disc with a handle and pilot for locating cams in gauge.

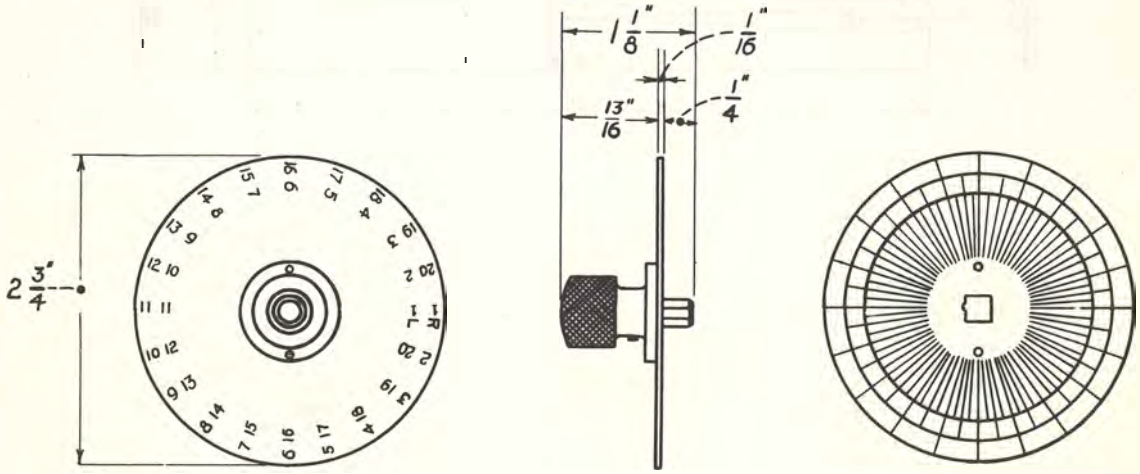

105A Gauge

Used in checking the closing spring adjustments of solenoid master switches in step-by-step systems.

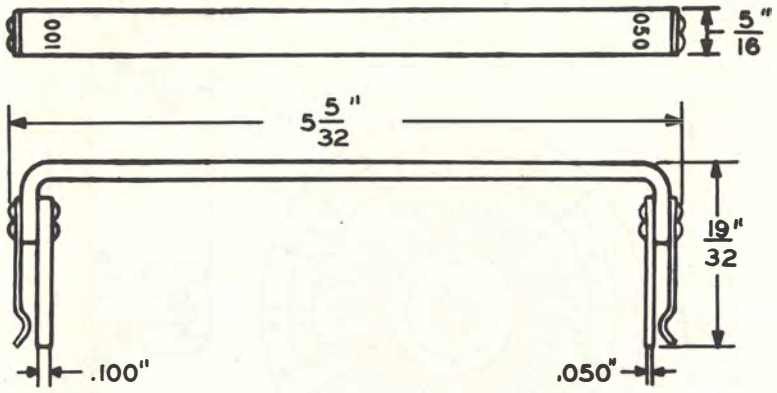

120A Gauge

Used in checking the relative locations of the vertical drive shaft and the associated sequence switches in panel-type dial systems.

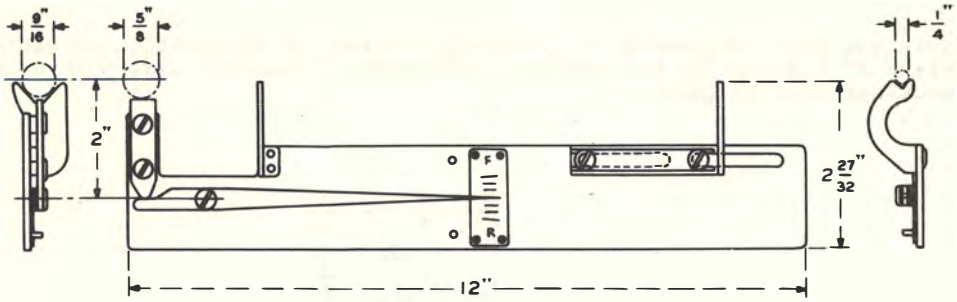

148-type Gauge

Used in measuring armature travel on vertical units on switches.

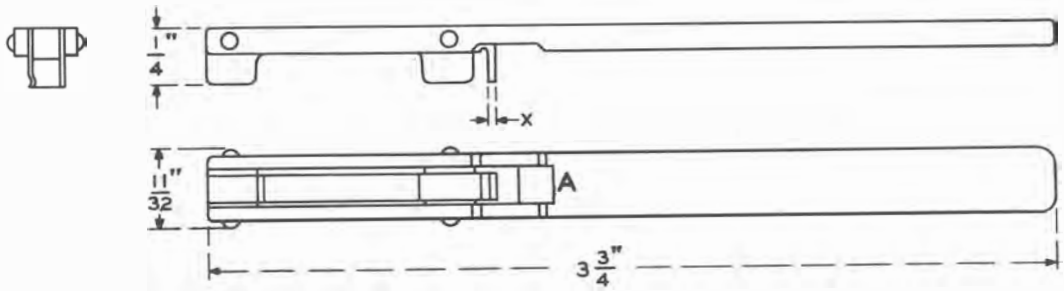

GAUGE	THICKNESS (Dim. X)
148A	0.012 inch
148B	0.015 inch
148C	0.025 inch
148D	0.050 inch
148E	0.055 inch
148F	0.065 inch
148G	0.009 inch

164-type Gauge

X-75515

Used in conjunction with the 165A gauge in gauging the position of the selecting fingers on switches in crossbar dial systems. Value of dimension X is engraved on gauge.

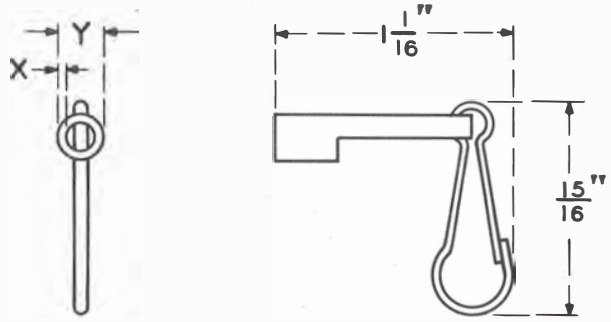

Gauge	Dim. X	Dim. Y
164A	.067 inch	.259 inch
164B	.040 inch	.205 inch

76 Gauge

Used in locating reciprocating bar-type interrupters in their proper position on frames.

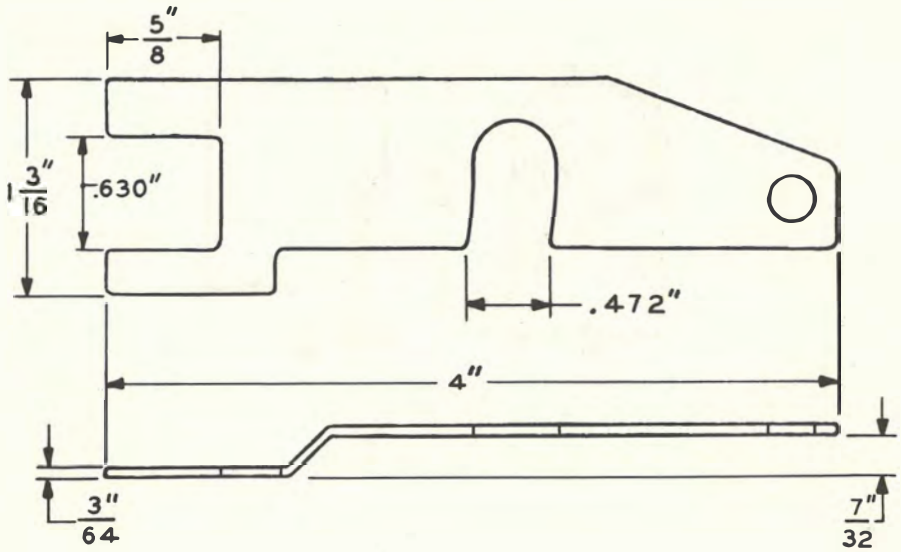

89 Gauge

Used in dial systems for checking clearance between vertical trip rod finger and multiple brush trip lever; also clearance between vertical trip rod finger and either sleeve spring of multiple brush.

X-75515

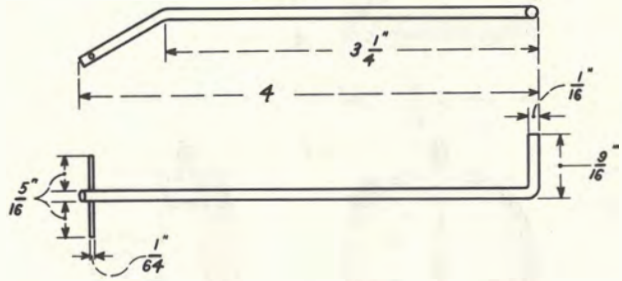

108A Gauge

Used for controlling the amount which must be filed off the bottom of a worn brush rod in order to make it possible to salvage it by means of the use of a new rack and washer.

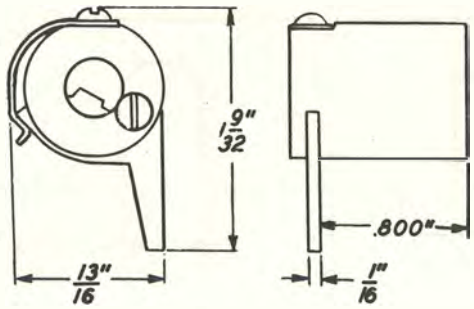

121A Gauge

Used in conjunction with the 458A tool for adjusting clutches in panel-type dial systems.

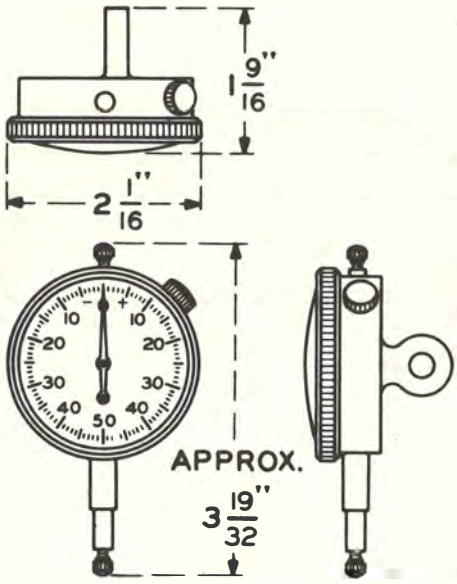

122A Gauge

Used in checking the coin chutes of coin collectors in the field to insure that the coin chutes are free from obstructions.

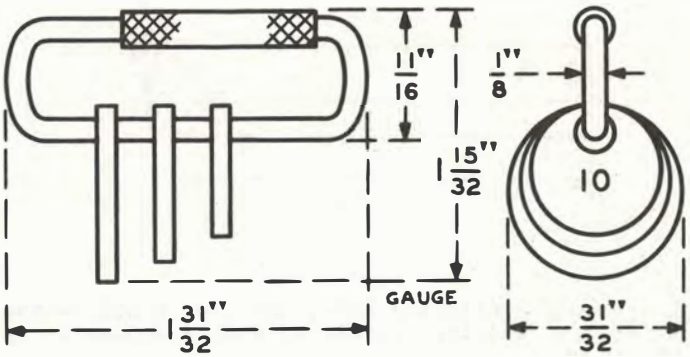

142A Gauge

Used in adjusting the armature gap on timers used in crossbar dial systems.

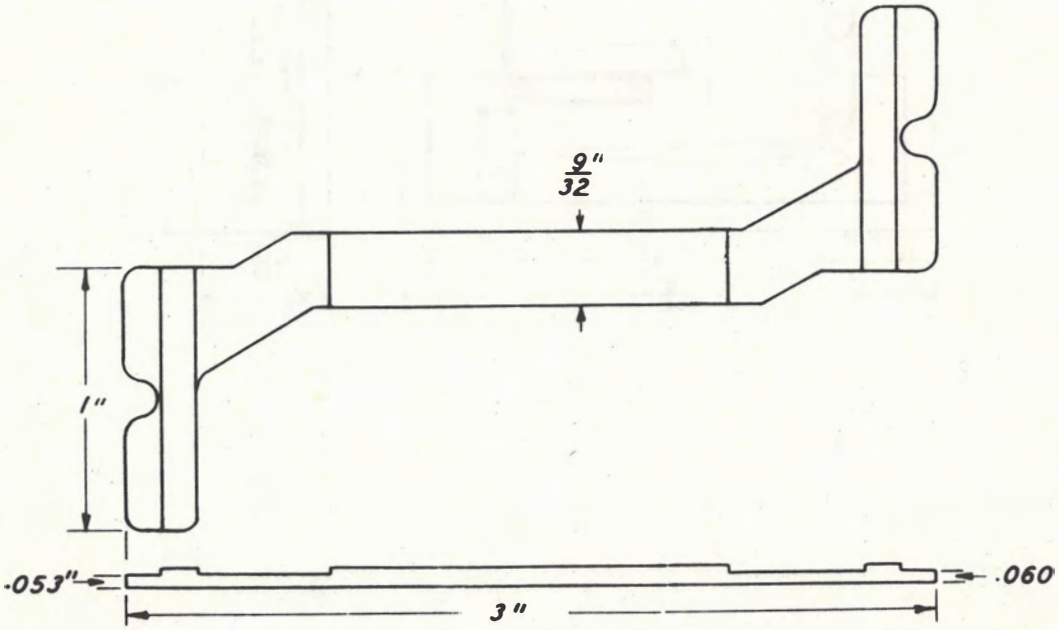

X-75515

143A Gauge

Used in setting the off-normal cams on coin and zone timers and for setting hold cams on the zone timers used in crossbar dial systems.

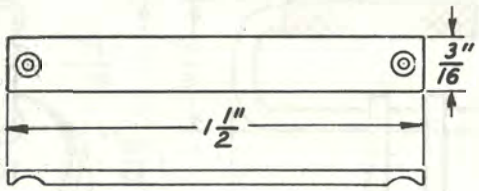

159A Gauge

Used in panel-type dial systems in aligning 207-, 208-, or similar-type selectors in relation to their associated driving shafts. Furnished with a wooden carrying case.

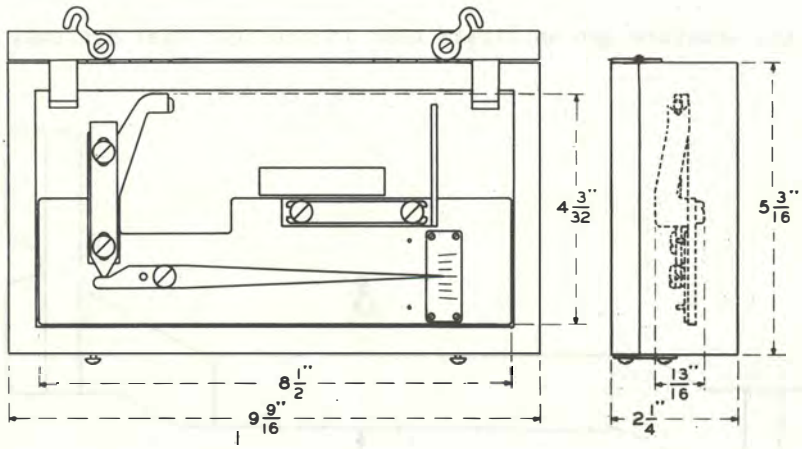

169A Gauge

Used in checking the off-normal spring contact separation of the 214A selector.

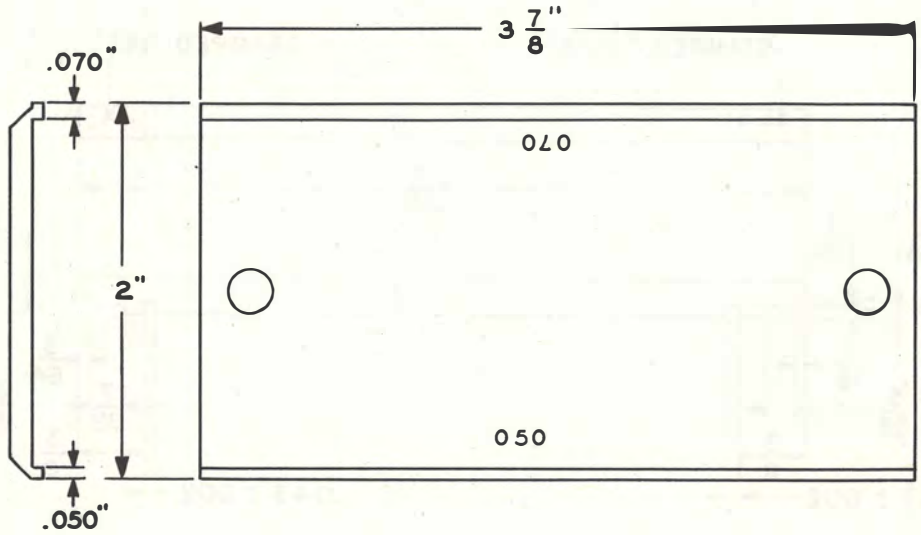

D-158525 Gauge

Used for measuring the distance between the upper surface of the top level of contacts to the lower surface of the bottom level of contacts of step-by-step banks. Made of phenol fiber.

X-75515

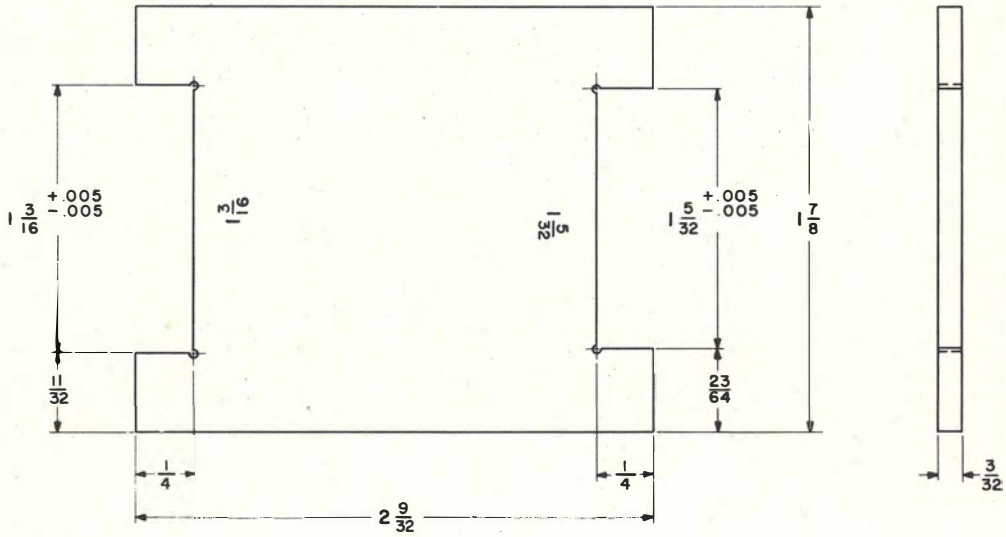

R-3069 Gauge

Used in gauging and adjusting the retractile spring lug on 5-, 12-, and 14-type registers.

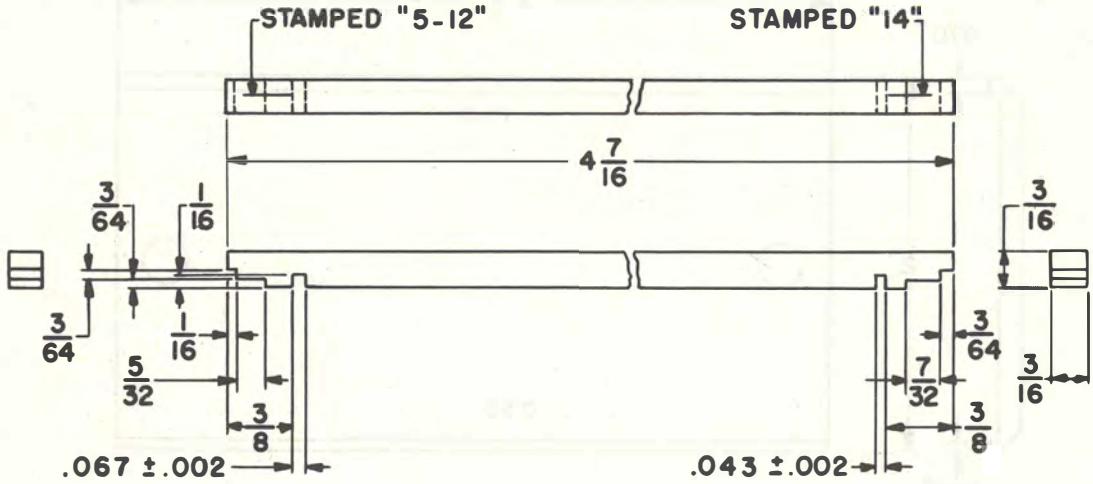

AMERICAN LOOSE LEAF CORPORATION
NEW YORK, N. Y.

193977